RF TEST REPORT

Applicant	Quectel Wireless Solutions Co., Ltd
FCC ID	XMR201910BG95M3
Product	LTE Cat M1 & Cat NB2 & EGPRS Module
Brand	Quectel
Marketing	Quectel BG95-M3
Model	BG95-M3
Report No.	R1907A0446-R4
Issue Date	September 11, 2019

TA Technology (Shanghai) Co., Ltd. tested the above equipment in accordance with the requirements in **FCC CFR47 Part 2 (2018)/ FCC CFR 47 Part 22H (2018)**. The test results show that the equipment tested is capable of demonstrating compliance with the requirements as documented in this report.

Peng Tao

Performed by: Peng Tao

Kai Xu

Approved by: Kai Xu

TA Technology (Shanghai) Co., Ltd.

No.145, Jintang Rd, Tangzhen Industry Park, Pudong Shanghai, China

TEL: +86-021-50791141/2/3

FAX: +86-021-50791141/2/3-8000

TABLE OF CONTENT

1. Test Laboratory 4
1.1. Notes of the Test Report 4
1.2. Test facility 4
1.3. Testing Location 5
2. General Description of Equipment under Test 6
3. Applied Standards 7
4. Test Configuration 8
5. Test Case Results 9
5.1. RF Power Output 9
5.2. Effective Radiated Power 11
5.3. Occupied Bandwidth 14
5.4. Band Edge Compliance 19
5.5. Peak-to-Average Power Ratio (PAPR) 22
5.6. Frequency Stability 24
5.7. Spurious Emissions at Antenna Terminals 28
5.8. Radiates Spurious Emission 30
6. Main Test Instruments 35

This report shall not be reproduced except in full, without the written approval of TA Technology (Shanghai) Co., Ltd.

Summary of measurement results

No.	Test Case	Clause in FCC rules	Verdict
1	RF power output	2.1046	PASS
2	Effective Radiated Power	22.913(a)(5)	PASS
3	Occupied Bandwidth	2.1049	PASS
4	Band Edge Compliance	2.1051 / 22.917(a)	PASS
5	Peak-to-Average Power Ratio	22.913(d)/ KDB 971168 D01(5.7)	PASS
6	Frequency Stability	2.1055 / 22.355	PASS
7	Spurious Emissions at Antenna Terminals	2.1051 / 22.917(a)	PASS
8	Radiates Spurious Emission	2.1053 / 22.917 (a)	PASS
Note: PASS: The EUT complies with the essential requirements in the standard. FAIL: The EUT does not comply with the essential requirements in the standard.			
Date of Testing: August 12, 2019~ September 5, 2019			

This report shall not be reproduced except in full, without the written approval of TA Technology (Shanghai) Co., Ltd.

1. Test Laboratory

1.1. Notes of the Test Report

This report shall not be reproduced in full or partial, without the written approval of **TA technology (shanghai) co., Ltd.** The results documented in this report apply only to the tested sample, under the conditions and modes of operation as described herein .Measurement Uncertainties were not taken into account and are published for informational purposes only. This report is written to support regulatory compliance of the applicable standards stated above.

1.2. Test facility

FCC (Designation number: CN1179, Test Firm Registration Number: 446626)

TA Technology (Shanghai) Co., Ltd. has been listed on the US Federal Communications Commission list of test facilities recognized to perform electromagnetic emissions measurements.

IC (recognition number is 8510A)

TA Technology (Shanghai) Co., Ltd. has been listed by industry Canada to perform electromagnetic emission measurement.

VCCI (recognition number is C-4595, T-2154, R-4113, G-10766)

TA Technology (Shanghai) Co., Ltd. has been listed by industry Japan to perform electromagnetic emission measurement.

A2LA (Certificate Number: 3857.01)

TA Technology (Shanghai) Co., Ltd. has been listed by American Association for Laboratory Accreditation to perform electromagnetic emission measurement.

This report shall not be reproduced except in full, without the written approval of TA Technology (Shanghai) Co., Ltd.

1.3. Testing Location

Company:	TA Technology (Shanghai) Co., Ltd.
Address:	No.145, Jintang Rd, Tangzhen Industry Park, Pudong
City:	Shanghai
Post code:	201201
Country:	P. R. China
Contact:	Xu Kai
Telephone:	+86-021-50791141/2/3
Fax:	+86-021-50791141/2/3-8000
Website:	http://www.ta-shanghai.com
E-mail:	xukai@ta-shanghai.com

This report shall not be reproduced except in full, without the written approval of TA Technology (Shanghai) Co., Ltd.

2. General Description of Equipment under Test

Client Information

Applicant	Quectel Wireless Solutions Co., Ltd
Applicant address	Building 5, Shanghai Business Park Phase III (Area B), No.1016 Tianlin Road, Minhang District, Shanghai, China 200233
Manufacturer	Quectel Wireless Solutions Co., Ltd
Manufacturer address	Building 5, Shanghai Business Park Phase III (Area B), No.1016 Tianlin Road, Minhang District, Shanghai, China 200233

General Information

EUT Description			
Model	BG95-M3		
IMEI	864475040001835		
Hardware Version	R2.1		
Software Version	BG95M3LAR02A01		
Power Supply	External Power Supply		
Antenna Type	External Antenna		
Antenna Gain	3dBi		
Test Mode(s)	NB-IOT Band 5		
Test Modulation	BPSK, QPSK		
Category	NB2		
Deployment	stand-alone		
Sub-carrier spacing	3.75KHz, 15KHz		
Ntones	single, multi-tone		
Maximum E.R.P.	NB-IOT Band 5	21.59dBm	
Rated Power Supply Voltage	3.8V		
Extreme Voltage	Minimum: 3.3V Maximum: 4.3V		
Extreme Temperature	Lowest: -40°C Highest: +85°C		
Operating Frequency Range(s)	Band	Tx (MHz)	Rx (MHz)
	NB-IOT Band 5	824 ~ 849	869 ~ 894
Note: The information of the EUT is declared by the manufacturer.			

This report shall not be reproduced except in full, without the written approval of TA Technology (Shanghai) Co., Ltd.

3. Applied Standards

According to the specifications of the manufacturer, it must comply with the requirements of the following standards:

FCC CFR47 Part 2 (2018)

FCC CFR 47 Part 22H (2018)

ANSI C63.26 (2015)

KDB 971168 D01 Power Meas License Digital Systems v03r01

This report shall not be reproduced except in full, without the written approval of TA Technology (Shanghai) Co., Ltd.

4. Test Configuration

Radiated measurements are performed by rotating the EUT in three different orthogonal test planes. EUT stand-up position (Z axis), lie-down position (X, Y axis). Receiver antenna polarization (horizontal and vertical), the worst emission was found in position (X axis, horizontal polarization) and the worst case was recorded.

All modes as Subcarrier Spacing, modulations, Channel were investigated.
Subsequently, only the worst case emissions are reported.
The following testing in NB-IOT is set based on the maximum RF Output Power.
The following testing in different mode is set to detail in the following table:

Test modes are chosen as the worst case configuration below for NB-IOT Band 5.

Test items	Deployment mode	Subcarrier Spacing (kHz)		Modulation		Test Channel		
	Stand-alone	3.75	15	BPSK	QPSK	L	M	H
RF power output	O	O	O	O	O	O	O	O
Effective Isotropic Radiated power	O	O	O	O	O	O	O	O
Occupied Bandwidth	O	O	O	O	O	O	O	O
Band Edge Compliance	O	O	O	O	O	O	-	O
Peak-to-Average Power Ratio	O	O	O	O	O	-	O	-
Frequency Stability	O	O	O	O	O	O	O	O
Spurious Emissions at Antenna Terminals	O	-	O	-	O	O	O	O
Radiates Spurious Emission	O	-	O	-	O	O	O	O

Note
1. The mark “O” means that this configuration is chosen for testing.
2. The mark “-” means that this configuration is not testing.

This report shall not be reproduced except in full, without the written approval of TA Technology (Shanghai) Co., Ltd.

5. Test Case Results

5.1. RF Power Output

Ambient condition

Temperature	Relative humidity	Pressure
23°C ~25°C	45%~50%	101.5kPa

Methods of Measurement

During the process of the testing, The EUT is controlled by the Base Station Simulator to ensure max power transmission and proper modulation.

Test Setup

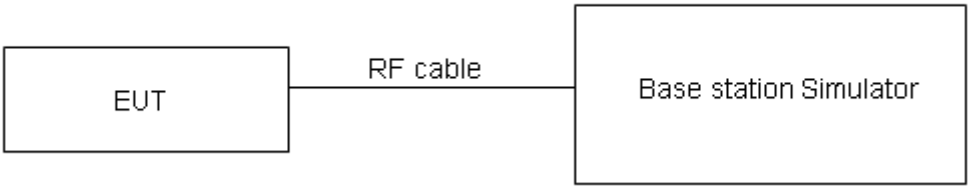

The loss between RF output port of the EUT and the input port of the tester has been taken into consideration.

Limits

No specific RF power output requirements in part 2.1046.

Measurement Uncertainty

The assessed measurement uncertainty to ensure 95% confidence level for the normal distribution is with the coverage factor k = 2, U= 0.4 dB.

This report shall not be reproduced except in full, without the written approval of TA Technology (Shanghai) Co., Ltd.

Test Results

Mode	Modulation	Sub-carrier spacing (KHz)	Ntones	Conducted Power (dBm) for low/mid/high channel		
				20401/824.1	20525/836.5	20649/848.9
Band 5 Standalone	BPSK	3.75	1@0	20.31	20.44	20.44
			1@47	20.24	20.31	20.30
		15	1@0	20.63	20.38	20.58
			1@11	20.54	20.32	20.48
	QPSK	3.75	1@0	20.61	20.42	20.38
			1@47	20.49	20.31	20.31
		15	1@0	20.74	20.54	20.58
			1@11	20.63	20.42	20.47
		15	12@0	19.22	19.07	19.11

This report shall not be reproduced except in full, without the written approval of TA Technology (Shanghai) Co., Ltd.

5.2. Effective Radiated Power

Ambient condition

Temperature	Relative humidity	Pressure
23°C ~25°C	45%~50%	101.5kPa

Methods of Measurement

The testing follows FCC KDB 971168 v03r01 Section 5.8 and ANSI C63.26 (2015).

a) Connect the equipment as illustrated. Mount the equipment with the manufacturer specified antenna in a vertical orientation on a manufacturer specified mounting surface located on a non-conducting rotating platform of a RF anechoic chamber (preferred) or a standard radiation site.

b) Key the transmitter, then rotate the EUT 360° azimuthally and record spectrum analyzer power level (LVL) measurements at angular increments that are sufficiently small to permit resolution of all peaks. If a standard radiation test site is used, raise and lower the test antenna to obtain a maximum reading at each angular increment. (Note: several batteries may be needed to offset the effect of battery voltage droop, which should not exceed 5% of the manufactured specified battery voltage during transmission).

c) Replace the transmitter under test with a vertically polarized half-wave dipole (or an antenna whose gain is known relative to an ideal half-wave dipole). The center of the antenna should be at the same location as the center of the antenna under test.

d) Connect the antenna to a signal generator with a known output power and record the path loss (in dB) as LOSS. If a standard radiation test site is used, raise and lower the test antenna to obtain a maximum reading.LOSS = Generator Output Power (dBm) – Analyzer reading (dBm)

e) Determine the effective radiated output power at each angular position from the readings in steps b) and d) using the following equation:ERP (dBm) = LVL (dBm) + LOSS (dB)

f) The maximum ERP is the maximum value determined in the preceding step.

g) When calculating ERP, in addition to knowing the antenna radiation and matching characteristics, it is necessary to know the loss values of all elements (e.g.transmission line attenuation, mismatches, filters, combiners) interposed between the point where transmitter output power is measured, and the point where power is applied to the antenna. ERP can then be calculated as follows:

EIRP (dBm) = Output Power (dBm) - Losses (dB) + Antenna Gain (dBi)

where:dBd refers to gain relative to an ideal dipole.

EIRP (dBm) = ERP (dBm) + 2.15 (dB.)

The RB allocation refers to section 5.1, using the maximum output power configuration.

This report shall not be reproduced except in full, without the written approval of TA Technology (Shanghai) Co., Ltd.

Test setup

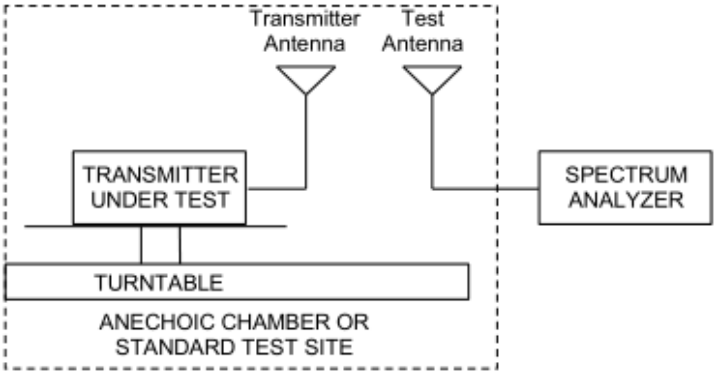

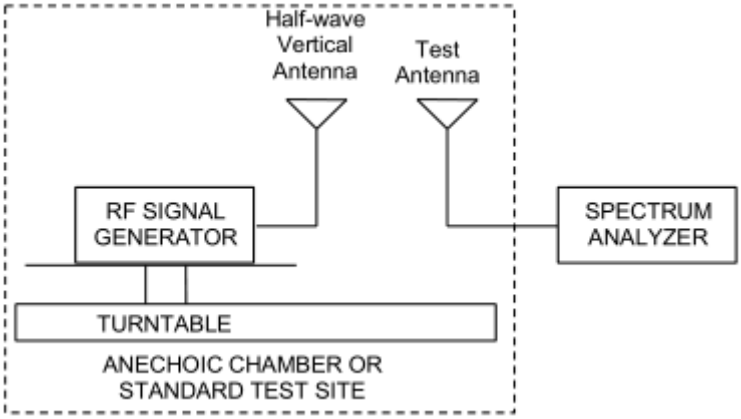

Limits

Rule Part 22.913(a)(5) specifies that "Mobile/portable stations are limited to 7 watts ERP".

Limit	≤ 7 W (38.45 dBm)

Measurement Uncertainty

The assessed measurement uncertainty to ensure 95% confidence level for the normal distribution is with the coverage factor k = 2, U= 1.19 dB

This report shall not be reproduced except in full, without the written approval of TA Technology (Shanghai) Co., Ltd.

Test Results:

The measurement is performed for both of horizontal and vertical antenna Polarization, and only the data of worst mode is recorded in this report.

Mode	Modulation	Sub-carrier spacing (KHz)	Ntones	ERP(dBm)			Limit (dBm)	Conclusion
				20401/ 824.1	20525/ 836.5	20649/ 848.9		
Band 5 Standalone	BPSK	3.75	1@0	21.16	21.29	21.29	38.45	Pass
			1@47	21.09	21.16	21.15	38.45	Pass
		15	1@0	21.48	21.23	21.43	38.45	Pass
			1@11	21.39	21.17	21.33	38.45	Pass
	QPSK	3.75	1@0	21.46	21.27	21.23	38.45	Pass
			1@47	21.34	21.16	21.16	38.45	Pass
		15	1@0	21.59	21.39	21.43	38.45	Pass
			1@11	21.48	21.27	21.32	38.45	Pass
		15	12@0	20.07	19.92	19.96	38.45	Pass

This report shall not be reproduced except in full, without the written approval of TA Technology (Shanghai) Co., Ltd.

5.3. Occupied Bandwidth

Ambient condition

Temperature	Relative humidity	Pressure
23°C ~25°C	45%~50%	101.5kPa

Method of Measurement

The EUT was connected to Spectrum Analyzer and Base Station Simulator via power Splitter. The occupied bandwidth is measured using spectrum analyzer.
RBW is set to 2kHz, VBW is set to 6.2kHz.

99% power and -26dBc occupied bandwidths are recorded. Spectrum analyzer plots are included on the following pages.

Test Setup

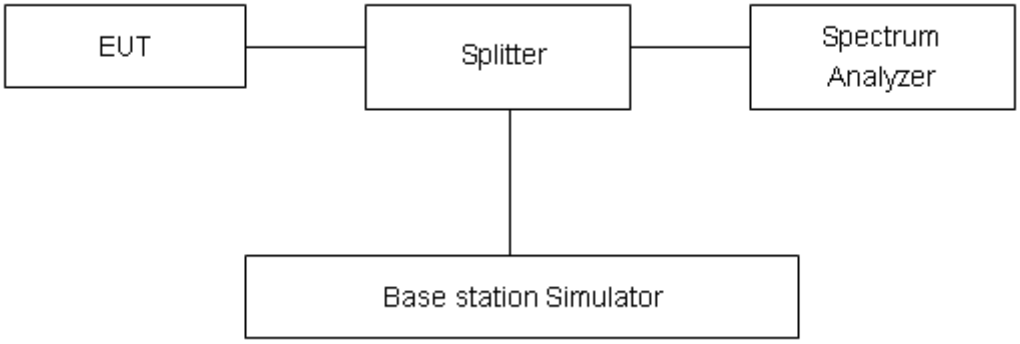

Limits

No specific occupied bandwidth requirements in part 2.1049.

Measurement Uncertainty

The assessed measurement uncertainty to ensure 95% confidence level for the normal distribution is with the coverage factor k = 2, U= 624Hz.

This report shall not be reproduced except in full, without the written approval of TA Technology (Shanghai) Co., Ltd.

Test Result

Mode	Modulation	Sub-carrier spacing (KHz)	Ntones	Bandwidth(KHz) for low/mid/high channel					
				20401/824.1		20525/836.5		20649/848.9	
				99% Power	-26dBc	99% Power	-26dBc	99% Power	-26dBc
Band 5 Standalone	BPSK	3.75	1@0	61.50	41.20	61.09	41.09	60.50	41.28
	QPSK	3.75	1@0	68.98	42.52	68.41	42.38	69.09	40.30
	BPSK	15	1@0	121.52	102.00	129.91	116.70	129.63	118.90
	QPSK	15	1@0	123.00	119.50	116.75	116.50	127.89	130.50
	QPSK	15	12@0	183.29	250.70	183.27	238.00	184.08	236.10

This report shall not be reproduced except in full, without the written approval of TA Technology (Shanghai) Co., Ltd.

NB-IOT Band 5 BPSK 3.75kHz 1@0 CH-Low

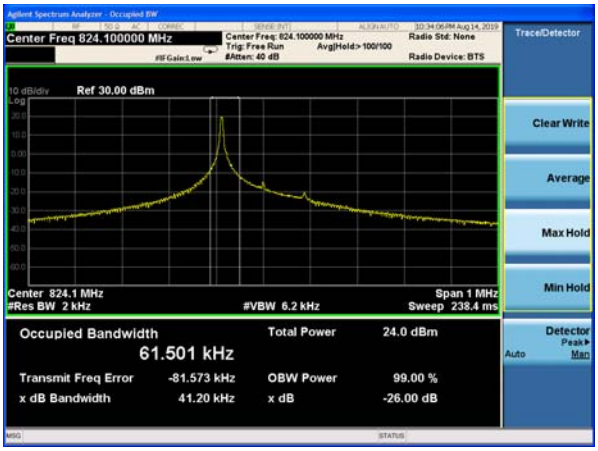

NB-IOT Band 5 BPSK 15kHz 1@0 CH-Low

NB-IOT Band 5 BPSK 3.75kHz 1@0 CH-Middle

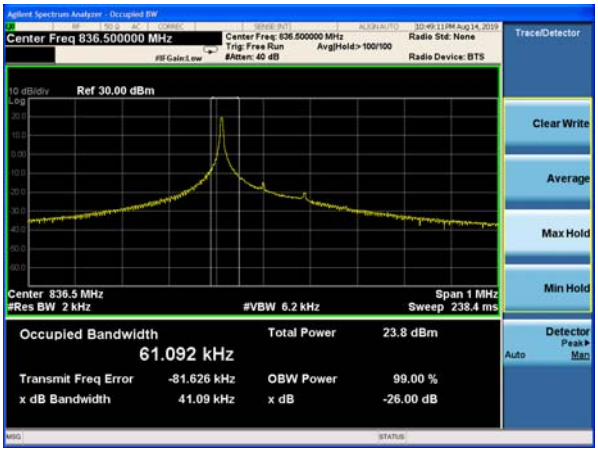

NB-IOT Band 5 BPSK 15kHz 1@0 CH-Middle

NB-IOT Band 5 BPSK 3.75kHz 1@0 CH-High

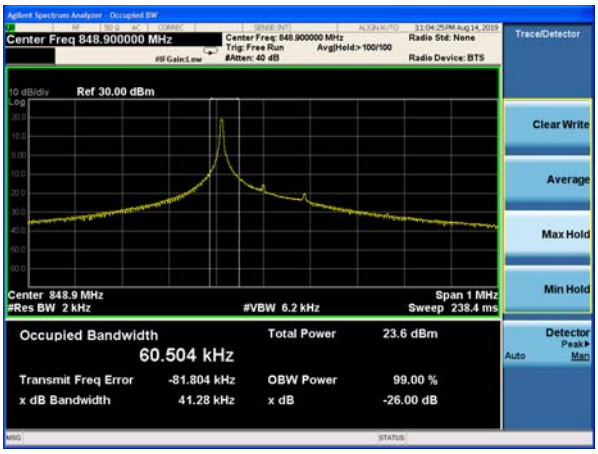

NB-IOT Band 5 BPSK 15kHz 1@0 CH-High

This report shall not be reproduced except in full, without the written approval of TA Technology (Shanghai) Co., Ltd.

NB-IOT Band 5 QPSK 3.75kHz 1@0 CH-Low

NB-IOT Band 5 QPSK 15kHz 1@0 CH-Low

NB-IOT Band 5 QPSK 3.75kHz 1@0 CH-Middle

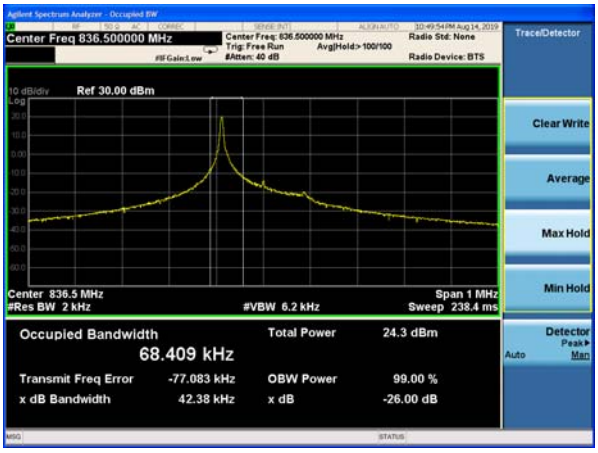

NB-IOT Band 5 QPSK 15kHz 1@0 CH-Middle

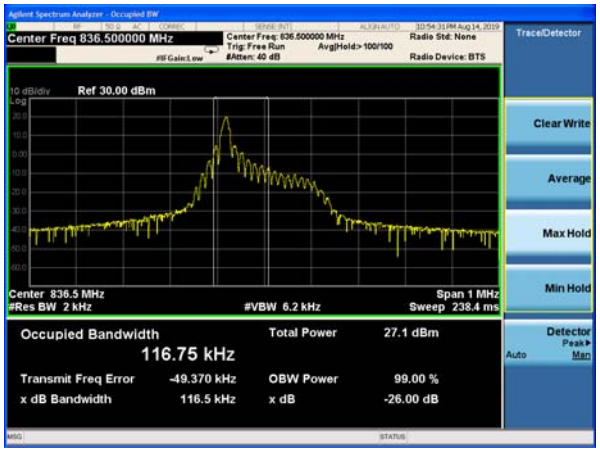

NB-IOT Band 5 QPSK 3.75kHz 1@0 CH-High

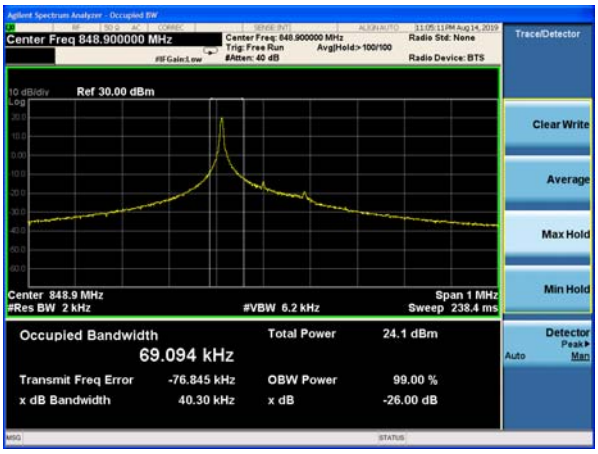

NB-IOT Band 5 QPSK 15kHz 1@0 CH-High

This report shall not be reproduced except in full, without the written approval of TA Technology (Shanghai) Co., Ltd.

NB-IOT Band 5 QPSK 15kHz 12@0 CH-Low

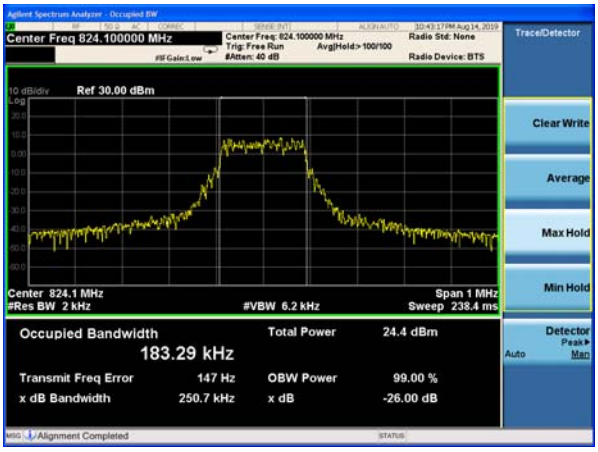

NB-IOT Band 5 QPSK 15kHz 12@0 CH-Middle

NB-IOT Band 5 QPSK 15kHz 12@0 CH-High

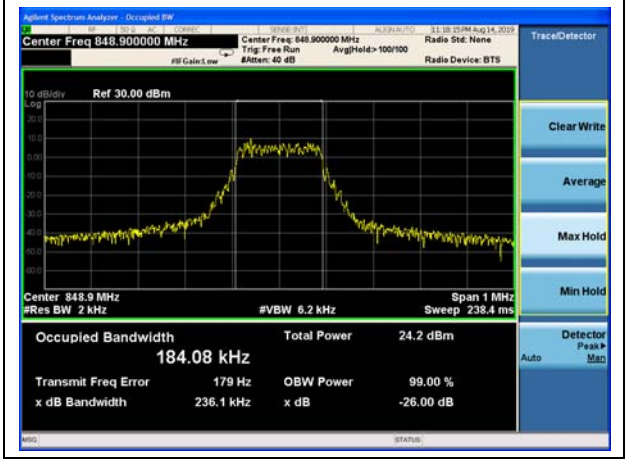

This report shall not be reproduced except in full, without the written approval of TA Technology (Shanghai) Co., Ltd.

5.4. Band Edge Compliance

Ambient condition

Temperature	Relative humidity	Pressure
23°C ~25°C	45%~50%	101.5kPa

Method of Measurement

The EUT was connected to Spectrum Analyzer and Base Station Simulator via power Splitter. The band edge of the lowest and highest channels were measured. The average detector is used.
RBW is set to 750kHz, VBW is set to 2.4kHz for 3.75KHz single carrier,
RBW is set to 1.3kHz, VBW is set to 3.9kHz for 15KHz single carrier,
RBW is set to 2kHz, VBW is set to 6.2KHz for 15KHz full carrier.
Spectrum analyzer plots are included on the following pages.

Test Setup

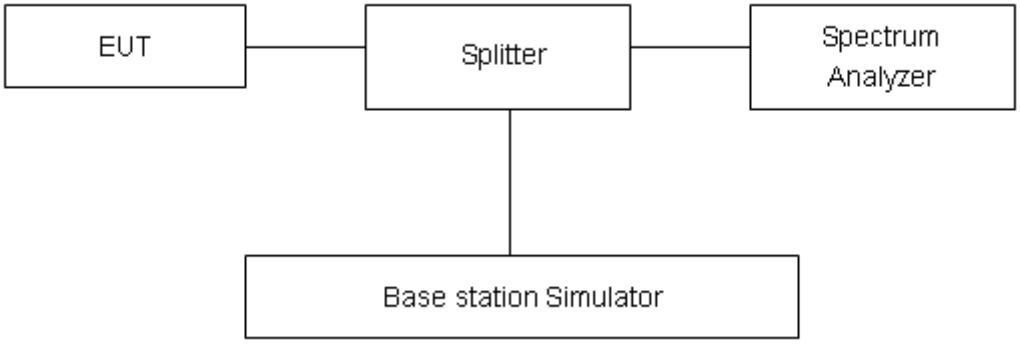

Limits

Rule Part 22.917(a) specifies that “The power of any emission outside of the authorized operating frequency ranges must be attenuated below the transmitting power (P) by a factor of at least 43 + 10 log(P) dB.”

Limit	-13 dBm

Measurement Uncertainty

The assessed measurement uncertainty to ensure 95% confidence level for the normal distribution is with the coverage factor *k* = 1.96, *U*=0.684dB.

This report shall not be reproduced except in full, without the written approval of TA Technology (Shanghai) Co., Ltd.

Test Result:

NB-IOT Band 5 BPSK 3.75kHz 1@0 CH-Low

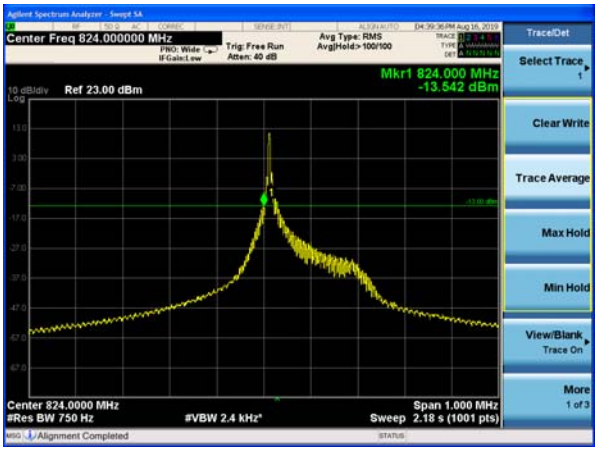

NB-IOT Band 5 BPSK 3.75kHz 1@47 CH-High

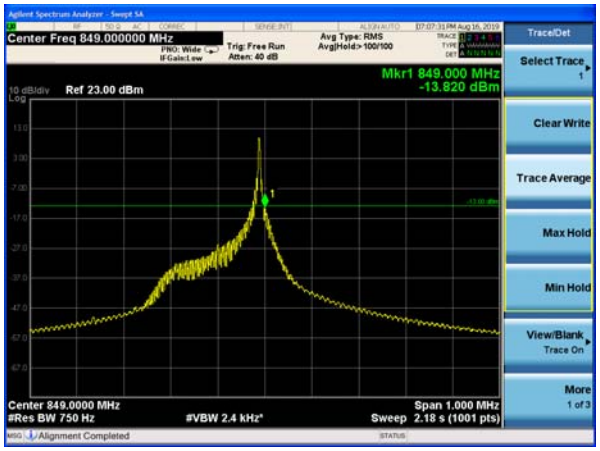

NB-IOT Band 5 BPSK 15kHz 1@0 CH-Low

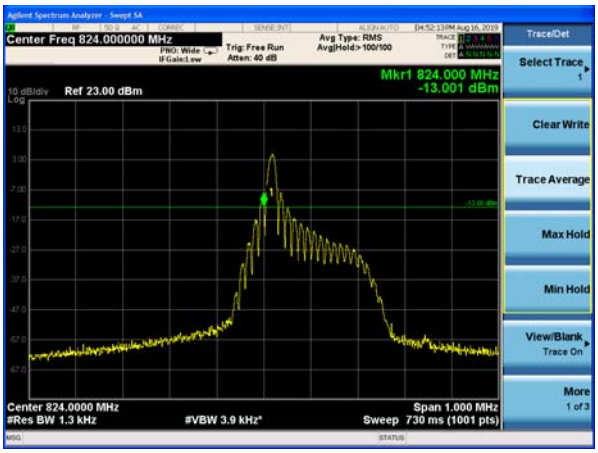

NB-IOT Band 5 BPSK 15kHz 1@11 CH-High

NB-IOT Band 5 QPSK 3.75kHz 1@0 CH-Low

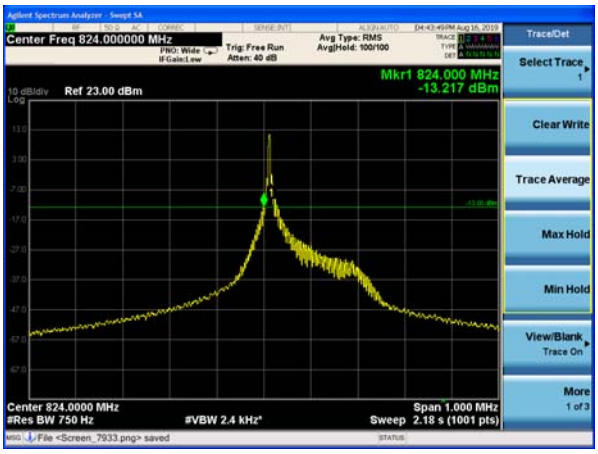

NB-IOT Band 5 QPSK 3.75kHz 1@47 CH-High

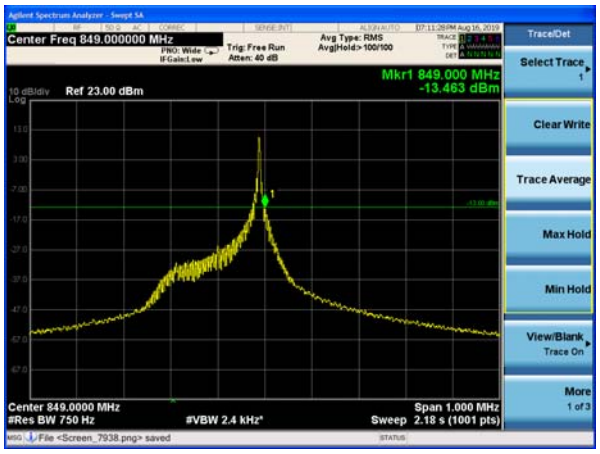

This report shall not be reproduced except in full, without the written approval of TA Technology (Shanghai) Co., Ltd.

NB-IOT Band 5 QPSK 15kHz 1@0 CH-Low

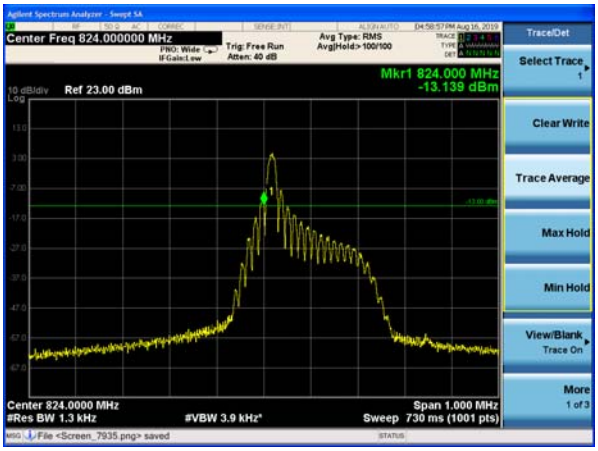

NB-IOT Band 5 QPSK 15kHz 1@11 CH-High

NB-IOT Band 5 QPSK 15kHz 12@0 CH-Low

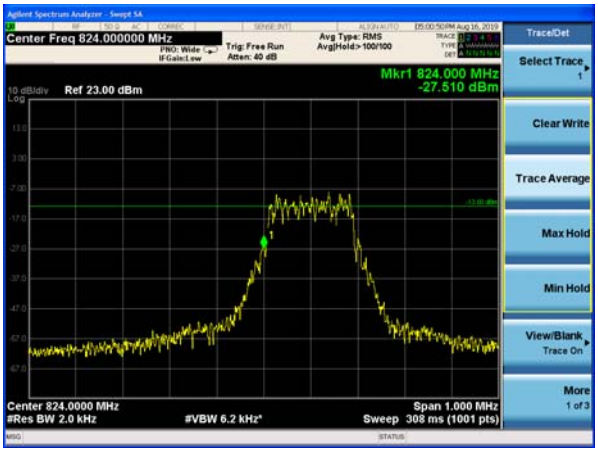

NB-IOT Band 5 QPSK 15kHz 12@0 CH-High

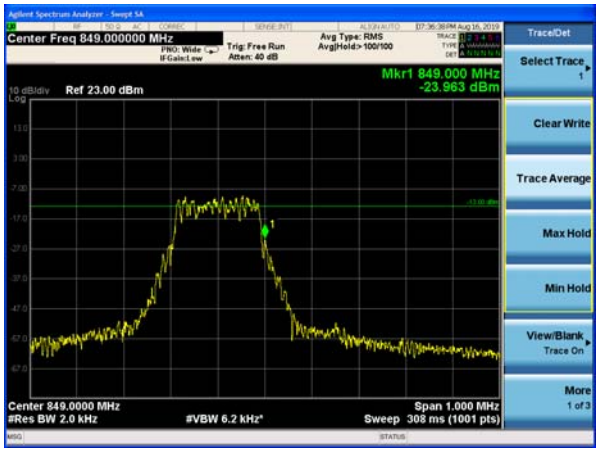

This report shall not be reproduced except in full, without the written approval of TA Technology (Shanghai) Co., Ltd.

5.5. Peak-to-Average Power Ratio (PAPR)

Ambient condition

Temperature	Relative humidity	Pressure
23°C ~25°C	45%~50%	101.5kPa

Methods of Measurement

Measure the total peak power and record as P_{Pk}. And measure the total average power and record as P_{Avg}. Both the peak and average power levels must be expressed in the same logarithmic units (*e.g.*, dBm). Determine the PAPR from:
PAPR (dB) = P_{Pk} (dBm) - P_{Avg} (dBm).

Test Setup

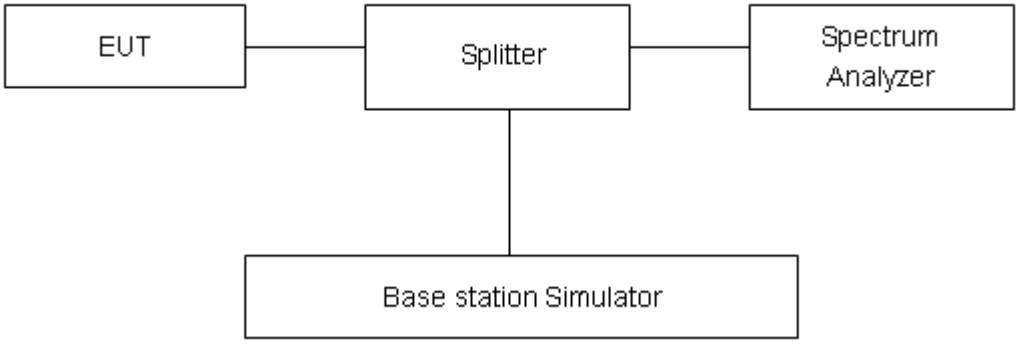

Limits

According to the Sec. 22.913(d), The peak-to-average ratio (PAR) of the transmission must not exceed 13 dB.

Measurement Uncertainty

The assessed measurement uncertainty to ensure 95% confidence level for the normal distribution is with the coverage factor *k* = 2, *U*= 0.4 dB.

This report shall not be reproduced except in full, without the written approval of TA Technology (Shanghai) Co., Ltd.

Test Results

Mode	Modulation	Sub-carrier spacing (KHz)	Channel/ Frequency (MHz)	Peak-to-Average Power Ratio (PAPR)			Limit (dB)	Conclusion
				Peak(dBm)	Avg(dBm)	PAPR(dB)		
Band 5 Standalone	BPSK	3.75	20525/836.5	21.69	17.92	3.77	≤13	PASS
	QPSK	3.75	20525/836.5	21.26	17.88	3.38	≤13	PASS
	BPSK	15	20525/836.5	21.69	15.27	6.42	≤13	PASS
	QPSK	15	20525/836.5	21.65	15.26	6.39	≤13	PASS

This report shall not be reproduced except in full, without the written approval of TA Technology (Shanghai) Co., Ltd.

5.6. Frequency Stability

Ambient condition

Temperature	Relative humidity	Pressure
23°C ~25°C	45%~50%	101.5kPa

Method of Measurement

Frequency Stability (Temperature Variation)

The temperature inside the climate chamber is varied from -40°C to +85°C in 10°C step size,

(1) With all power removed, the temperature was decreased to 0°C and permitted to stabilize for three hours.

(2) Measure the carrier frequency with the test equipment in a “call mode”. These measurements should be made within 1 minute of powering up the mobile station, to prevent significant self warming.

(3) Repeat the above measurements at 10°C increments from -40°C to +85°C. Allow at least 1.5 hours at each temperature, un-powered, before making measurements. Frequency Stability (Voltage Variation)

The frequency stability shall be measured with variation of primary supply voltage as follows:

(1) Vary primary supply voltage from 85 to 115 percent of the nominal value for other than hand carried battery equipment.

(2) For hand carried, battery powered equipment, reduce primary supply voltage to the battery-operating end point which shall be specified by the manufacturer.

This transceiver is specified to operate with an input voltage of between 3.3 V and 4.3V, with a nominal voltage of 3.8V.

Test setup

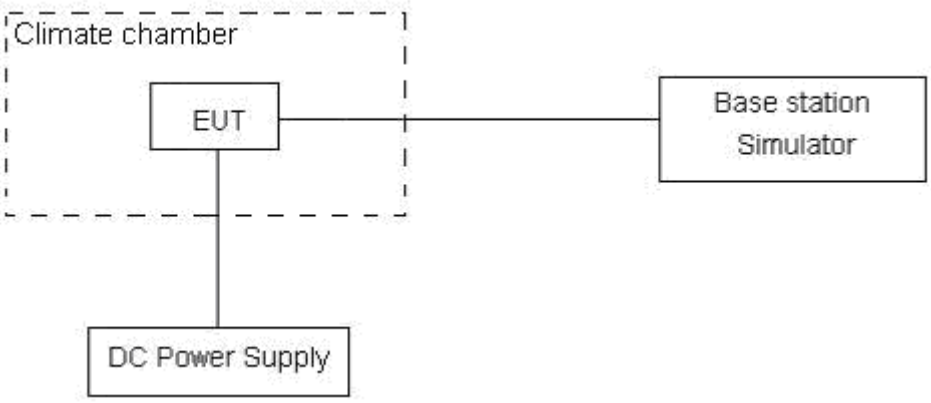

This report shall not be reproduced except in full, without the written approval of TA Technology (Shanghai) Co., Ltd.

Limits

According to the Sec. 22.355, the frequency stability of the carrier shall be accurate to within 2.5 ppm of the received frequency for mobile stations.

Limits	≤ 2.5 ppm

Measurement Uncertainty

The assessed measurement uncertainty to ensure 99.75％ confidence level for the normal distribution is with the coverage factor *k* = 3, *U*= 0.01ppm.

This report shall not be reproduced except in full, without the written approval of TA Technology (Shanghai) Co., Ltd.

Test Result

NB-IOT Band 5						
Condition		Freq.Error (Hz)	Freq.Error (Hz)	Frequency Stability（ppm）	Frequency Stability（ppm）	Verdict
BANDWIDTH	3.75					
Temperature	Voltage	BPSK	QPSK	BPSK	QPSK	
Normal（25℃）	Normal	2.23	2.38	0.00119	0.00127	PASS
Extreme（85℃）		8.63	6.17	0.00459	0.00328	PASS
Extreme（80℃）		9.86	10.28	0.00525	0.00547	PASS
Extreme（70℃）		11.47	12.00	0.00610	0.00638	PASS
Extreme（60℃）		17.30	3.77	0.00920	0.00201	PASS
Extreme（50℃）		15.20	13.65	0.00808	0.00726	PASS
Extreme（40℃）		6.69	16.36	0.00356	0.00870	PASS
Extreme（30℃）		10.99	4.86	0.00584	0.00258	PASS
Extreme（20℃）		12.12	2.32	0.00645	0.00123	PASS
Extreme（10℃）		5.31	2.38	0.00283	0.00126	PASS
Extreme（0℃）		14.82	14.58	0.00788	0.00776	PASS
Extreme（-10℃）		11.18	7.95	0.00595	0.00423	PASS
Extreme（-20℃）		3.93	17.01	0.00209	0.00905	PASS
Extreme（-30℃）		9.16	14.66	0.00487	0.00780	PASS
Extreme（-40℃）		10.51	9.86	0.00559	0.00524	PASS
25℃	LV	1.83	7.54	0.00097	0.00401	PASS
	HV	7.70	1.01	0.00410	0.00053	PASS
Condition		Freq.Error (Hz)	Freq.Error (Hz)	Frequency Stability（ppm）	Frequency Stability（ppm）	Verdict
BANDWIDTH	15					
Temperature	Voltage	BPSK	QPSK	BPSK	QPSK	
Normal（25℃）	Normal	9.46	2.53	0.00503	0.00134	PASS
Extreme（85℃）		16.27	11.98	0.00865	0.00637	PASS
Extreme（80℃）		2.77	13.63	0.00147	0.00725	PASS
Extreme（70℃）		7.31	12.34	0.00389	0.00657	PASS
Extreme（60℃）		16.22	4.80	0.00863	0.00255	PASS
Extreme（50℃）		4.79	10.07	0.00255	0.00536	PASS
Extreme（40℃）		7.15	3.92	0.00380	0.00209	PASS
Extreme（30℃）		15.51	10.36	0.00825	0.00551	PASS
Extreme（20℃）		10.26	11.56	0.00546	0.00615	PASS
Extreme（10℃）		8.19	13.74	0.00435	0.00731	PASS
Extreme（0℃）		14.26	3.85	0.00759	0.00205	PASS
Extreme（-10℃）		2.08	2.81	0.00110	0.00150	PASS
Extreme（-20℃）		10.13	14.87	0.00539	0.00791	PASS
Extreme（-30℃）		1.22	13.36	0.00065	0.00711	PASS

This report shall not be reproduced except in full, without the written approval of TA Technology (Shanghai) Co., Ltd.

Extreme（-40℃）		3.85	11.84	0.00205	0.00630	PASS
25℃	LV	3.75	16.26	0.00200	0.00865	PASS
	HV	11.30	11.14	0.00601	0.00592	PASS

This report shall not be reproduced except in full, without the written approval of TA Technology (Shanghai) Co., Ltd.

5.7. Spurious Emissions at Antenna Terminals

Ambient condition

Temperature	Relative humidity	Pressure
23°C ~25°C	45%~50%	101.5kPa

Method of Measurement

The EUT was connected to Spectrum Analyzer and Base Station Simulator via power Splitter. The measurement is carried out using a spectrum analyzer. The spectrum analyzer scans from 9kHz to the 10th harmonic of the carrier.
The peak detector is used. RBW are set to 100 kHz and VBW are set to 300 kHz for below 1G, RBW are set to 1MHz and VBW are set to 3MHz for above 1G, Sweep is set to ATUO.
The modulation mode and RB allocation refer to section 5.1, using the maximum output power configuration.

Test setup

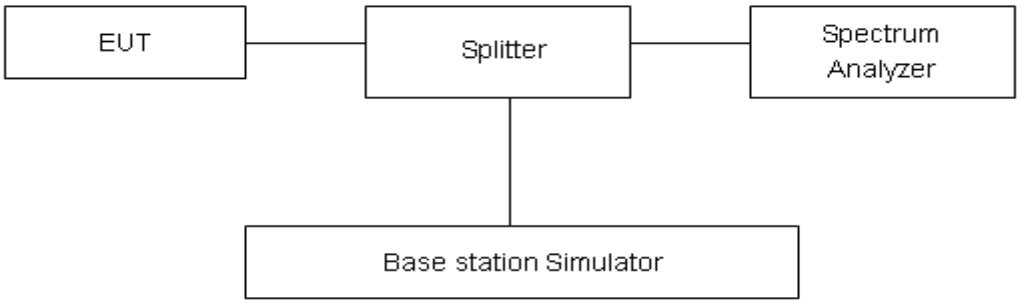

Limits

Rule Part 22.917(a) specifies that “The power of any emission outside of the authorized operating frequency ranges must be attenuated below the transmitting power (P) by a factor of at least 43 + 10 log (P) dB.”

Limit	-13 dBm

Measurement Uncertainty

The assessed measurement uncertainty to ensure 99.75% confidence level for the normal distribution is with the coverage factor *k* = 1.96.

Frequency	Uncertainty
9kHz-1GHz	0.684 dB
1GHz-18GHz	1.407 dB

This report shall not be reproduced except in full, without the written approval of TA Technology (Shanghai) Co., Ltd.

Test Result

Sweep the whole frequency band through the range from 9kHz to the 10th harmonic of the carrier, the emissions more than 20 dB below the limit are not reported.

The signal beyond the limit is carrier.

NB-IOT Band 5 CH-Low 30MHz-1GHz

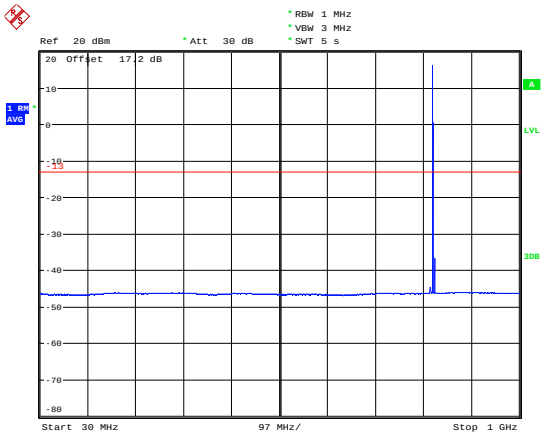

Date: 28.AUG.2019 12:15:43

NB-IOT Band 5 CH-Low 1GHz-9GHz

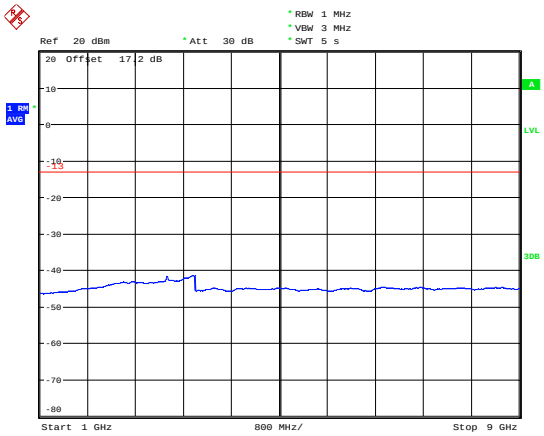

Date: 28.AUG.2019 12:23:03

NB-IOT Band 5 CH-Middle 30MHz-1GHz

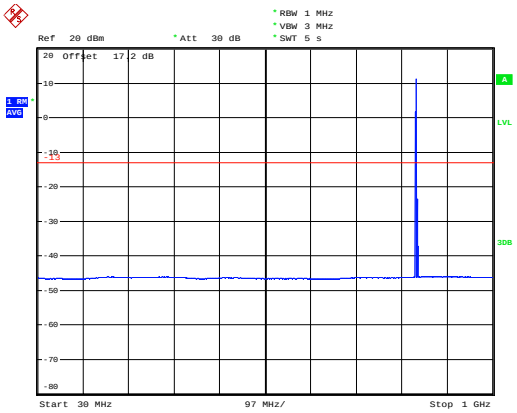

Date: 28.AUG.2019 12:18:45

NB-IOT Band 5 CH-Middle 1GHz-9GHz

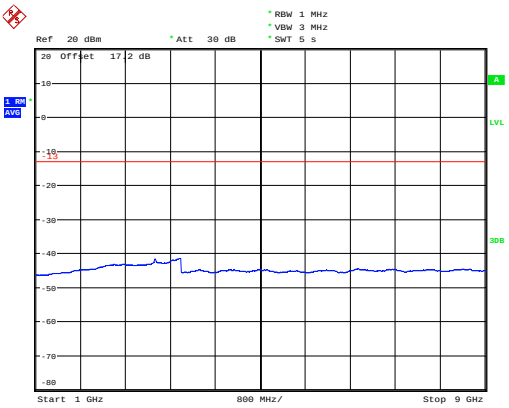

Date: 28.AUG.2019 12:29:47

NB-IOT Band 5 CH-High 30MHz-1GHz

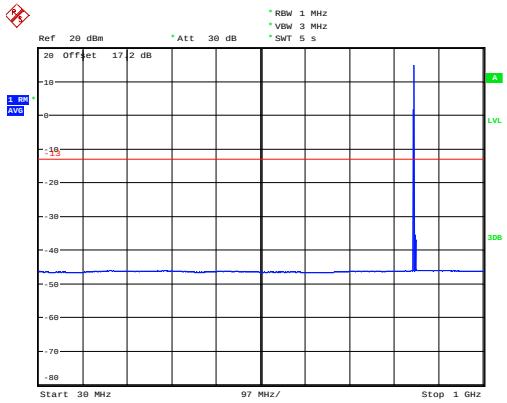

Date: 28.AUG.2019 12:19:58

NB-IOT Band 5 CH-High 1GHz-9GHz

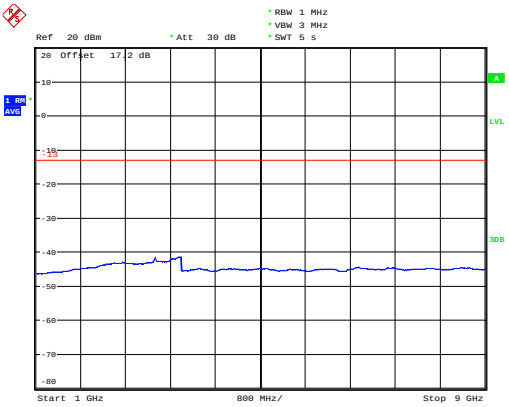

Date: 28.AUG.2019 12:31:20

This report shall not be reproduced except in full, without the written approval of TA Technology (Shanghai) Co., Ltd.

5.8. Radiates Spurious Emission

Ambient condition

Temperature	Relative humidity	Pressure
23°C ~25°C	45%~50%	101.5kPa

Method of Measurement

1. The testing follows FCC KDB 971168 v03r01 Section 5.8 and ANSI C63.26 (2015).
2. Below 1GHz: The EUT is placed on a turntable 0.8 meters above the ground in the chamber, 3 meter away from the antenna. The maximal emission value is acquired by adjusting the antenna height, polarisation and turntable azimuth. Normally, the height range of antenna is 1 m to 4 m, the azimuth range of turntable is 0° to 360°, and the receive antenna has two polarizations Vertical (V) and Horizontal (H). Above 1GHz: (Note: the FCC's permission to use 1.5m as an alternative per TCBC Conf call of Dec. 2, 2014.) The EUT is placed on a turntable 1.5 meters above the ground in the chamber, 3 meter away from the antenna. The maximal emission value is acquired by adjusting the antenna height, polarisation and turntable azimuth. Normally, the height range of antenna is 1 m to 4 m, the azimuth range of turntable is 0° to 360°, and the receive antenna has two polarizations Vertical (V) and Horizontal (H).
3. A loop antenna, A log-periodic antenna or horn antenna shall be substituted in place of the EUT. The log-periodic antenna will be driven by a signal generator and the level will be adjusted till the same power value on the spectrum analyzer or receiver. The level of the spurious emissions can be calculated through the level of the signal generator, cable loss, the gain of the substitution antenna and the reading of the spectrum analyzer or receiver.
4. The EUT is then put into continuously transmitting mode at its maximum power level during the test. Set Test Receiver or Spectrum RBW=200Hz,VBW=600Hz for 9kHz150kHz , RBW=10kHz, VBW=30kHz 150kHz-30MHz , RBW=100kHz,VBW=300kHz for 30MHz to 1GHz and RBW=1MHz, VBW=3MHz for above 1GHz, And the maximum value of the receiver should be recorded as (Pr).
5. The EUT shall be replaced by a substitution antenna. In the chamber, an substitution antenna for the frequency band of interest is placed at the reference point of the chamber. An RF Signal source for the frequency band of interest is connected to the substitution antenna with a cable that has been constructed to not interfere with the radiation pattern of the antenna. A power (PMea) is applied to the input of the substitution antenna, and adjust the level of the signal generator output until the value of the receiver reach the previously recorded (Pr). The power of signal source (PMea) is recorded. The test should be performed by rotating the test item and adjusting the receiving antenna polarization.
6. A amplifier should be connected to the Signal Source output port. And the cable should be connect between the Amplifier and the Substitution Antenna. The cable loss (Pcl) ,the Substitution Antenna Gain (Ga) and the Amplifier Gain (PAg) should be recorded after test.
7. The measurement results are obtained as described below:
Power(EIRP)=PMea- PAg - Pcl + Ga
The measurement results are amend as described below:
Power(EIRP)=PMea- Pcl + Ga
8. This value is EIRP since the measurement is calibrated using an antenna of known gain (2.15 dBi)

This report shall not be reproduced except in full, without the written approval of TA Technology (Shanghai) Co., Ltd.

and known input power. ERP can be calculated from EIRP by subtracting the gain of the dipole, ERP = EIRP-2.15dBi.

The modulation mode and RB allocation refer to section 5.1, using the maximum output power configuration.

Test setup

9KHz ~ 30MHz

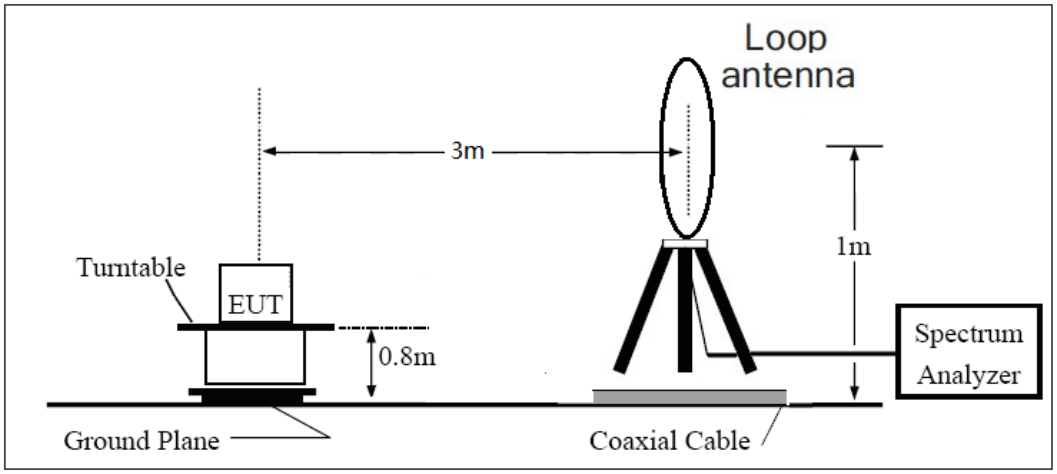

30MHz ~ 1GHz

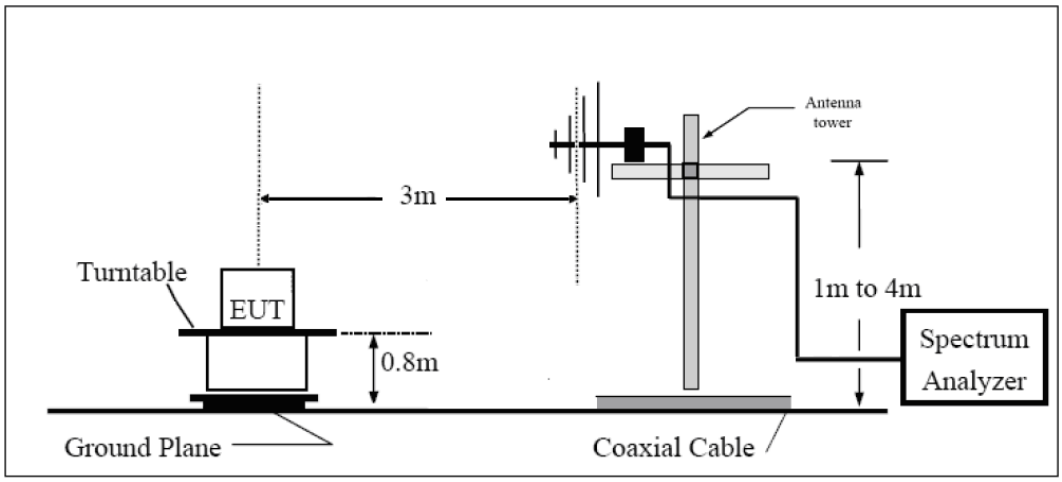

Above 1GHz

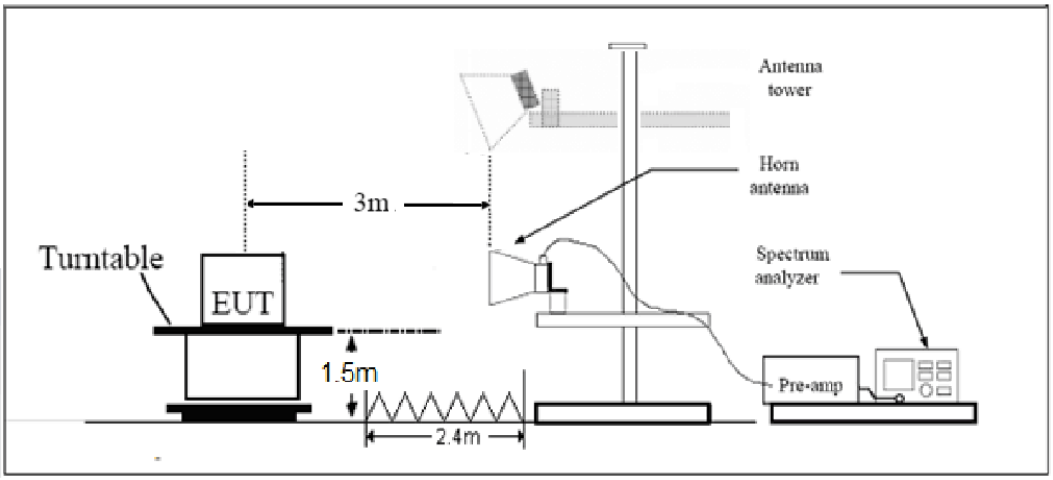

This report shall not be reproduced except in full, without the written approval of TA Technology (Shanghai) Co., Ltd.

Note: Area side:2.4mX3.6m

Limits

Rule Part 22.917(a) specifies that “The power of any emission outside of the authorized operating frequency ranges must be attenuated below the transmitting power (P) by a factor of at least 43 + 10 log (P) dB.”

Limit	-13 dBm

Measurement Uncertainty

The assessed measurement uncertainty to ensure 95％ confidence level for the normal distribution is with the coverage factor *k* = 1.96, *U*= 3.55 dB.

This report shall not be reproduced except in full, without the written approval of TA Technology (Shanghai) Co., Ltd.

Test Result

Sweep the whole frequency band through the range from 9kHz to the 10th harmonic of the carrier, the emissions below the noise floor will not be recorded in the report.

NB-IOT Band 5 CH-Low

Harmonic	Frequency (MHz)	SG (dBm)	Cable Loss (dB)	Gain (dBi)	Antenna Polarization	ERP Level (dBm)	Limit (dBm)	Margin (dB)	Azimuth (deg)
2	1648.2	-59.30	2.00	10.75	Horizontal	-52.70	-13.00	39.70	225
3	2472.3	-56.99	2.51	11.05	Horizontal	-50.60	-13.00	37.60	225
4	3296.4	-55.04	4.20	11.15	Horizontal	-50.24	-13.00	37.24	315
5	4120.5	-59.59	5.20	11.15	Horizontal	-55.79	-13.00	42.79	180
6	4944.6	-59.26	5.50	11.95	Horizontal	-54.96	-13.00	41.96	90
7	5768.7	-60.02	5.70	13.55	Horizontal	-54.32	-13.00	41.32	45
8	6592.8	-56.52	6.30	13.75	Horizontal	-51.22	-13.00	38.22	90
9	7416.9	-54.08	6.80	13.85	Horizontal	-49.18	-13.00	36.18	135
10	8241.0	-54.27	6.90	14.25	Horizontal	-49.07	-13.00	36.07	180

Note: 1.The other Spurious RF Radiated emissions level is no more than noise floor.
2.The worst emission was found in the antenna is Horizontal position.

NB-IOT Band 5 CH-Middle

Harmonic	Frequency (MHz)	SG (dBm)	Cable Loss (dB)	Gain (dBi)	Antenna Polarization	ERP Level (dBm)	Limit (dBm)	Margin (dB)	Azimuth (deg)
2	1673.0	-56.47	2.00	10.75	Horizontal	-49.87	-13.00	36.87	90
3	2509.5	-53.26	2.51	11.05	Horizontal	-46.87	-13.00	33.87	90
4	3346.0	-58.60	4.20	11.15	Horizontal	-53.80	-13.00	40.80	45
5	4182.5	-60.86	5.20	11.15	Horizontal	-57.06	-13.00	44.06	225
6	5019.0	-59.53	5.50	11.95	Horizontal	-55.23	-13.00	42.23	180
7	5855.5	-60.94	5.70	13.55	Horizontal	-55.24	-13.00	42.24	180
8	6692.0	-59.01	6.30	13.75	Horizontal	-53.71	-13.00	40.71	90
9	7528.5	-55.53	6.80	13.85	Horizontal	-50.63	-13.00	37.63	45
10	8365.0	-56.31	6.90	14.25	Horizontal	-51.11	-13.00	38.11	90

Note: 1.The other Spurious RF Radiated emissions level is no more than noise floor.
2.The worst emission was found in the antenna is Horizontal position.

This report shall not be reproduced except in full, without the written approval of TA Technology (Shanghai) Co., Ltd.

NB-IOT Band 5 CH-High

Harmonic	Frequency (MHz)	SG (dBm)	Cable Loss (dB)	Gain (dBi)	Antenna Polarization	ERP Level (dBm)	Limit (dBm)	Margin (dB)	Azimuth (deg)
2	1697.8	-55.59	2.00	10.75	Horizontal	-48.99	-13.00	35.99	45
3	2546.7	-52.38	2.51	11.05	Horizontal	-45.99	-13.00	32.99	270
4	3395.6	-62.49	4.20	11.15	Horizontal	-57.69	-13.00	44.69	135
5	4244.5	-60.04	5.20	11.15	Horizontal	-56.24	-13.00	43.24	180
6	5093.4	-59.22	5.50	11.95	Horizontal	-54.92	-13.00	41.92	315
7	5942.3	-60.58	5.70	13.55	Horizontal	-54.88	-13.00	41.88	135
8	6791.2	-58.24	6.30	13.75	Horizontal	-52.94	-13.00	39.94	225
9	7640.1	-55.88	6.80	13.85	Horizontal	-50.98	-13.00	37.98	90
10	8489.0	-56.05	6.90	14.25	Horizontal	-50.85	-13.00	37.85	90

Note: 1.The other Spurious RF Radiated emissions level is no more than noise floor.
2.The worst emission was found in the antenna is Horizontal position.

This report shall not be reproduced except in full, without the written approval of TA Technology (Shanghai) Co., Ltd.

6. Main Test Instruments

Name	Manufacturer	Type	Serial Number	Calibration Date	Expiration Date
Base Station Simulator	R&S	CMW500	113824	2019-05-19	2020-05-18
Power Splitter	Hua Xiang	SHX-GF2-2-13	10120101	/	/
Spectrum Analyzer	Key sight	N9010A	MY50210259	2019-05-19	2020-05-18
Universal Radio Communication Tester	Key sight	E5515C	MY48367192	2019-05-19	2020-05-18
Signal Analyzer	R&S	FSV30	100815	2018-12-16	2019-12-15
Loop Antenna	SCHWARZBECK	FMZB1519	1519-047	2017-09-26	2019-09-25
Trilog Antenna	SCHWARZBECK	VUBL 9163	9163-201	2017-11-18	2019-11-17
Horn Antenna	R&S	HF907	100126	2018-07-07	2020-07-06
Horn Antenna	ETS-Lindgren	3160-09	00102643	2018-06-20	2020-06-19
Signal generator	R&S	SMB 100A	102594	2019-05-19	2020-05-18
Climatic Chamber	ESPEC	SU-242	93000506	2017-12-17	2020-12-16
Preampflier	R&S	SCU18	102327	2019-05-19	2020-05-18
MOB COMMS DC SUPPLY	Keysight	66319D	MY43004105	2019-05-20	2020-05-21
RF Cable	Agilent	SMA 15cm	0001	2019-06-14	2019-09-13
Software	R&S	EMC32	9.26.0	/	/
Wireless Test Set	StarPoint	SP8315	SP8315-1202	2019-05-19	2020-05-18
Wireless Test Set	StarPoint	SP8315	SP8315-1203	2019-05-19	2020-05-18

*******END OF REPORT *******

This report shall not be reproduced except in full, without the written approval of TA Technology (Shanghai) Co., Ltd.