RF TEST REPORT

Applicant	Quectel Wireless Solutions Co., Ltd
FCC ID	XMR201910BG95M3
Product	LTE Cat M1 & Cat NB2 & EGPRS Module
Brand	Quectel
Model	BG95-M3
Report No.	R1907A0446-R10
Issue Date	September 12, 2019

TA Technology (Shanghai) Co., Ltd. tested the above equipment in accordance with the requirements in **FCC CFR47 Part 2 (2018)/ FCC CFR 47 Part 90S (2018)**. The test results show that the equipment tested is capable of demonstrating compliance with the requirements as documented in this report.

Peng Tao

Performed by: Peng Tao

Kai Xu

Approved by: Kai Xu

TA Technology (Shanghai) Co., Ltd.

No.145, Jintang Rd, Tangzhen Industry Park, Pudong Shanghai, China

TEL: +86-021-50791141/2/3

FAX: +86-021-50791141/2/3-8000

TABLE OF CONTENT

1. Test Laboratory 4
1.1. Notes of the Test Report 4
1.2. Test facility 4
1.3. Testing Location 5
2. General Description of Equipment under Test 6
3. Applied Standards 7
4. Test Configuration 8
5. Test Case Results 9
5.1. RF Power Output 9
5.2. Effective Radiated Power 11
5.3. Occupied Bandwidth 14
5.4. Emission Mask 19
5.5. Peak-to-Average Power Ratio (PAPR) 21
5.6. Frequency Stability 23
5.7. Spurious Emissions at Antenna Terminals 27
5.8. Radiates Spurious Emission 29
6. Main Test Instruments 34

This report shall not be reproduced except in full, without the written approval of TA Technology (Shanghai) Co., Ltd.

Summary of measurement results

No.	Test Case	Clause in FCC rules	Verdict
1	RF power output	2.1046/90.635(b)	PASS
2	Effective Radiated Power	90.635(b)	PASS
3	Occupied Bandwidth	2.1049/ 90.209	PASS
4	Emission Masks	2.1051 / 90.691	PASS
5	Peak-to-Average Power Ratio	KDB 971168 D01(5.7)	PASS
6	Frequency Stability	2.1055 / 90.213	PASS
7	Spurious Emissions at Antenna Terminals	2.1051 / 90.691	PASS
8	Radiates Spurious Emission	2.1053 /90.691	PASS
Note: PASS: The EUT complies with the essential requirements in the standard. FAIL: The EUT does not comply with the essential requirements in the standard.			
Date of Testing: August 20, 2019 ~ September 11, 2019			

This report shall not be reproduced except in full, without the written approval of TA Technology (Shanghai) Co., Ltd.

1. Test Laboratory

1.1. Notes of the Test Report

This report shall not be reproduced in full or partial, without the written approval of **TA technology (shanghai) co., Ltd.** The results documented in this report apply only to the tested sample, under the conditions and modes of operation as described herein .Measurement Uncertainties were not taken into account and are published for informational purposes only. This report is written to support regulatory compliance of the applicable standards stated above.

1.2. Test facility

FCC (Designation number: CN1179, Test Firm Registration Number: 446626)

TA Technology (Shanghai) Co., Ltd. has been listed on the US Federal Communications Commission list of test facilities recognized to perform electromagnetic emissions measurements.

IC (recognition number is 8510A)

TA Technology (Shanghai) Co., Ltd. has been listed by industry Canada to perform electromagnetic emission measurement.

VCCI (recognition number is C-4595, T-2154, R-4113, G-10766)

TA Technology (Shanghai) Co., Ltd. has been listed by industry Japan to perform electromagnetic emission measurement.

A2LA (Certificate Number: 3857.01)

TA Technology (Shanghai) Co., Ltd. has been listed by American Association for Laboratory Accreditation to perform electromagnetic emission measurement.

This report shall not be reproduced except in full, without the written approval of TA Technology (Shanghai) Co., Ltd.

1.3. Testing Location

Company:	TA Technology (Shanghai) Co., Ltd.
Address:	No.145, Jintang Rd, Tangzhen Industry Park, Pudong
City:	Shanghai
Post code:	201201
Country:	P. R. China
Contact:	Xu Kai
Telephone:	+86-021-50791141/2/3
Fax:	+86-021-50791141/2/3-8000
Website:	http://www.ta-shanghai.com
E-mail:	xukai@ta-shanghai.com

This report shall not be reproduced except in full, without the written approval of TA Technology (Shanghai) Co., Ltd.

2. General Description of Equipment under Test

Client Information

Applicant	Quectel Wireless Solutions Co., Ltd
Applicant address	Building 5, Shanghai Business Park Phase III (Area B), No.1016 Tianlin Road, Minhang District, Shanghai, China 200233
Manufacturer	Quectel Wireless Solutions Co., Ltd
Manufacturer address	Building 5, Shanghai Business Park Phase III (Area B), No.1016 Tianlin Road, Minhang District, Shanghai, China 200233

General Information

EUT Description			
Model	BG95-M3		
IMEI	864475040001835		
Hardware Version	R2.1		
Software Version	BG95M3LAR02A01		
Power Supply	External power supply		
Antenna Type	The EUT don't have standard Antenna, The Antenna used for testing in this report is the after-market accessory (Dipole Antenna)		
Antenna Gain	NB-IOT Band 26: 3dBi		
Test Mode(s)	NB-IOT Band 26		
Test Modulation	BPSK, QPSK		
Category	NB2		
Deployment	stand-alone		
Sub-carrier spacing	3.75KHz, 15KHz		
Ntones	single, multi-tone		
Maximum E.R.P.	NB-IOT Band 26:	21.73dBm	
Rated Power Supply Voltage	3.8V		
Extreme Voltage	Minimum: 3.3V Maximum: 4.3V		
Extreme Temperature	Lowest: -40°C Highest: +85°C		
Operating Frequency Range(s)	Band	Tx (MHz)	Rx (MHz)
	NB-IOT Band 26	814 ~ 824	859 ~ 869
Note: The information of the EUT is declared by the manufacturer.			

This report shall not be reproduced except in full, without the written approval of TA Technology (Shanghai) Co., Ltd.

3. Applied Standards

According to the specifications of the manufacturer, it must comply with the requirements of the following standards:

FCC CFR47 Part 2 (2018)

FCC CFR 47 Part 90S (2018)

ANSI C63.26 (2015)

KDB 971168 D01 Power Meas License Digital Systems v03r01

This report shall not be reproduced except in full, without the written approval of TA Technology (Shanghai) Co., Ltd.

4. Test Configuration

Radiated measurements are performed by rotating the EUT in three different orthogonal test planes. EUT stand-up position (Z axis), lie-down position (X, Y axis). Receiver antenna polarization (horizontal and vertical), the worst emission was found in position (X axis, horizontal polarization) and the worst case was recorded.

All mode and data rates and positions were investigated.
The following testing in LTE is set based on the maximum RF Output Power.
Test modes are chosen as the worst case configuration below for NB-IOT Band 26

Test items	Deployment mode	Subcarrier Spacing (kHz)		Modulation		Test Channel		
	Stand-alone	3.75	15	BPSK	QPSK	L	M	H
RF power output	O	O	O	O	O	O	O	O
Effective Isotropic Radiated power	O	O	O	O	O	O	O	O
Occupied Bandwidth	O	O	O	O	O	O	O	O
Emission Mask	O	O	O	O	O	O	-	O
Peak-to-Average Power Ratio	O	O	O	O	O	-	O	-
Frequency Stability	O	O	O	O	O	O	O	O
Spurious Emissions at Antenna Terminals	O	-	O	-	O	O	O	O
Radiates Spurious Emission	O	-	O	-	O	-	O	-

Note
1. The mark “O” means that this configuration is chosen for testing.
2. The mark “-” means that this configuration is not testing.

This report shall not be reproduced except in full, without the written approval of TA Technology (Shanghai) Co., Ltd.

5. Test Case Results

5.1. RF Power Output

Ambient condition

Temperature	Relative humidity
21°C ~25°C	40%~60%

Methods of Measurement

During the process of the testing, The EUT is controlled by the Base Station Simulator to ensure max power transmission and proper modulation.

Test Setup

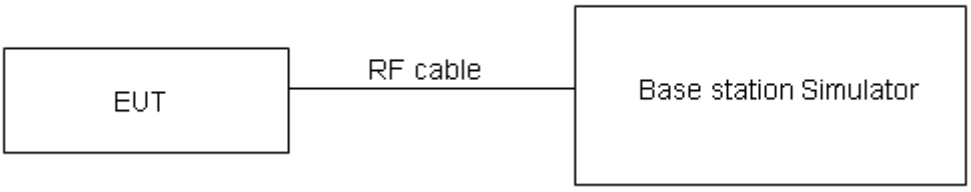

The loss between RF output port of the EUT and the input port of the tester has been taken into consideration.

Limits

Part 90.635 (b) the maximum output power of the transmitter for mobile stations is 100 watts.

Measurement Uncertainty

The assessed measurement uncertainty to ensure 95% confidence level for the normal distribution is with the coverage factor k = 2, U= 0.4 dB.

This report shall not be reproduced except in full, without the written approval of TA Technology (Shanghai) Co., Ltd.

Test Results

Mode	Modulation	Sub-carrier spacing (KHz)	Ntones	Conducted Power (dBm) for low/mid/high channel		
				26691/814.1	26740/819	26789/823.9
Band 26 Standalone	BPSK	3.75	1@0	20.41	20.72	20.73
			1@47	20.49	20.63	20.52
		15	1@0	20.65	20.64	20.81
			1@11	20.57	20.57	20.73
	QPSK	3.75	1@0	20.59	20.56	20.60
			1@47	20.31	20.52	20.48
		15	1@0	20.88	20.82	20.81
			1@11	20.81	20.75	20.70
		15	12@0	19.30	19.24	19.22

This report shall not be reproduced except in full, without the written approval of TA Technology (Shanghai) Co., Ltd.

5.2. Effective Radiated Power

Ambient condition

Temperature	Relative humidity
21°C ~25°C	40%~60%

Methods of Measurement

The testing follows FCC KDB 971168 v03r01 Section 5.8 and ANSI C63.26 (2015).

a) Connect the equipment as illustrated. Mount the equipment with the manufacturer specified antenna in a vertical orientation on a manufacturer specified mounting surface located on a non-conducting rotating platform of a RF anechoic chamber (preferred) or a standard radiation site.

b) Key the transmitter, then rotate the EUT 360° azimuthally and record spectrum analyzer power level (LVL) measurements at angular increments that are sufficiently small to permit resolution of all peaks. If a standard radiation test site is used, raise and lower the test antenna to obtain a maximum reading at each angular increment. (Note: several batteries may be needed to offset the effect of battery voltage droop, which should not exceed 5% of the manufactured specified battery voltage during transmission).

c) Replace the transmitter under test with a vertically polarized half-wave dipole (or an antenna whose gain is known relative to an ideal half-wave dipole). The center of the antenna should be at the same location as the center of the antenna under test.

d) Connect the antenna to a signal generator with a known output power and record the path loss (in dB) as LOSS. If a standard radiation test site is used, raise and lower the test antenna to obtain a maximum reading.LOSS = Generator Output Power (dBm) – Analyzer reading (dBm)

e) Determine the effective radiated output power at each angular position from the readings in steps b) and d) using the following equation:ERP (dBm) = LVL (dBm) + LOSS (dB)

f) The maximum ERP is the maximum value determined in the preceding step.

g) When calculating ERP, in addition to knowing the antenna radiation and matching characteristics, it is necessary to know the loss values of all elements (e.g.transmission line attenuation, mismatches, filters, combiners) interposed between the point where transmitter output power is measured, and the point where power is applied to the antenna. ERP can then be calculated as follows:

EIRP (dBm) = Output Power (dBm) - Losses (dB) + Antenna Gain (dBi)

where:dBd refers to gain relative to an ideal dipole.

EIRP (dBm) = ERP (dBm) + 2.15 (dB.)

The RB allocation refers to section 5.1, using the maximum output power configuration.

This report shall not be reproduced except in full, without the written approval of TA Technology (Shanghai) Co., Ltd.

Test configuration

Below 1GHz:

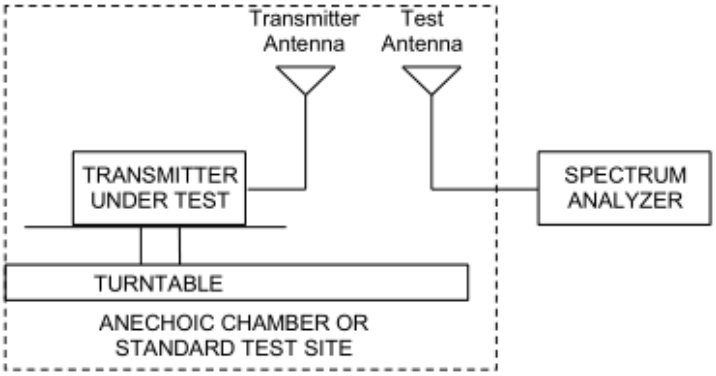

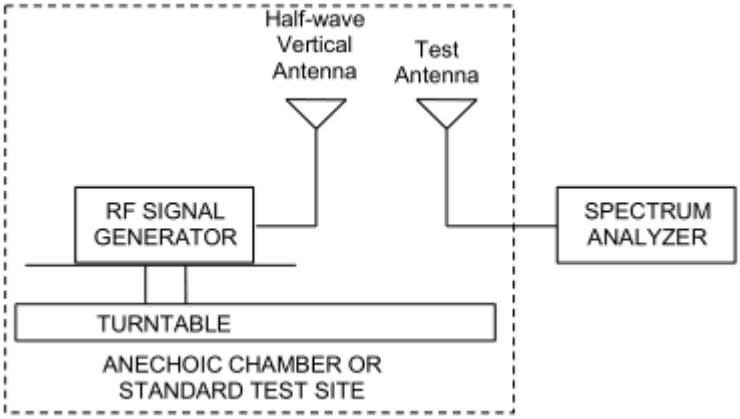

Limits

Rule Part 90.635(b) specifies that “The maximum output power of the transmitter for mobile stations is 100 watts”.

Limit	≤ 100 W (50 dBm)

Measurement Uncertainty

The assessed measurement uncertainty to ensure 95% confidence level for the normal distribution is with the coverage factor k = 2, U= 1.19 dB

This report shall not be reproduced except in full, without the written approval of TA Technology (Shanghai) Co., Ltd.

Test Results:

The measurement is performed for both of horizontal and vertical antenna Polarization, and only the data of worst mode is recorded in this report.

Mode	Modulation	Sub-carrier spacing (KHz)	Ntones	ERP(dBm)			Limit (dBm)	Conclusion
				26691/814.1	26740/819	26789/823.9		
Band 26 Standalone	BPSK	3.75	1@0	21.26	21.57	21.58	50	Pass
			1@47	21.34	21.48	21.37	50	Pass
		15	1@0	21.50	21.49	21.66	50	Pass
			1@11	21.42	21.42	21.58	50	Pass
	QPSK	3.75	1@0	21.44	21.41	21.45	50	Pass
			1@47	21.16	21.37	21.33	50	Pass
		15	1@0	21.73	21.67	21.66	50	Pass
			1@11	21.66	21.60	21.55	50	Pass
		15	12@0	20.15	20.09	20.07	50	Pass

This report shall not be reproduced except in full, without the written approval of TA Technology (Shanghai) Co., Ltd.

5.3. Occupied Bandwidth

Ambient condition

Temperature	Relative humidity
21°C ~25°C	40%~60%

Method of Measurement

The EUT was connected to Spectrum Analyzer and Base Station Simulator via power Splitter. The occupied bandwidth is measured using spectrum analyzer.
RBW is set to 2kHz, VBW is set to 6.2kHz.
99% power and -26dBc occupied bandwidths are recorded. Spectrum analyzer plots are included on the following pages.

Test Setup

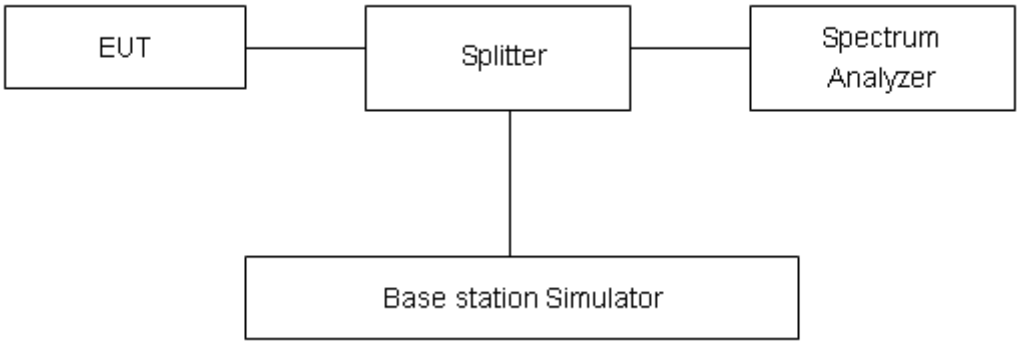

Limits

No specific occupied bandwidth requirements in part 2.1049.
Part 90.209 (a) Each authorization issued to a station licensed under this part will show an emission designator representing the class of emission authorized. The designator will be prefixed by a specified necessary bandwidth. This number does not necessarily indicate the bandwidth occupied by the emission at any instant. In those cases where part 2.202 of this chapter does not provide a formula for the computation of necessary bandwidth, the occupied bandwidth, as defined in part 2 of this chapter, may be used in lieu of the necessary bandwidth.

Measurement Uncertainty

The assessed measurement uncertainty to ensure 95% confidence level for the normal distribution is with the coverage factor k = 2, U= 624Hz.

This report shall not be reproduced except in full, without the written approval of TA Technology (Shanghai) Co., Ltd.

Test Result

Mode	Modulation	Sub-carrier spacing (KHz)	Ntones	Bandwidth(KHz) for low/mid/high channel					
				26691/814.1		26740/819		26789/823.9	
				99% Power	-26dBc	99% Power	-26dBc	99% Power	-26dBc
Band 26 Standalone	BPSK	3.75	1@0	61.14	40.96	61.16	41.22	60.12	40.95
	QPSK	3.75	1@0	68.56	41.14	69.01	40.83	67.25	40.09
	BPSK	15	1@0	121.12	104.20	131.75	118.40	129.07	117.60
	QPSK	15	1@0	116.37	116.40	116.62	115.40	116.63	116.70
	QPSK	15	12@0	182.83	260.20	183.77	260.60	182.82	239.30

This report shall not be reproduced except in full, without the written approval of TA Technology (Shanghai) Co., Ltd.

NB-IOT Band 26 BPSK 3.75kHz 1@0 CH-Low

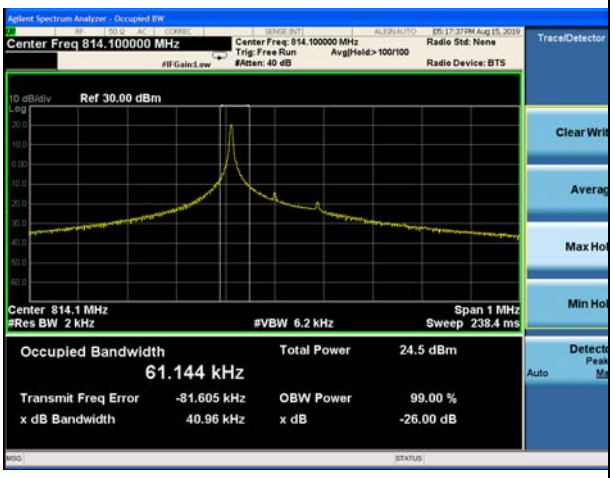

NB-IOT Band 26 BPSK 15kHz 1@0 CH-Low

NB-IOT Band 26 BPSK 3.75kHz 1@0 CH-Middle

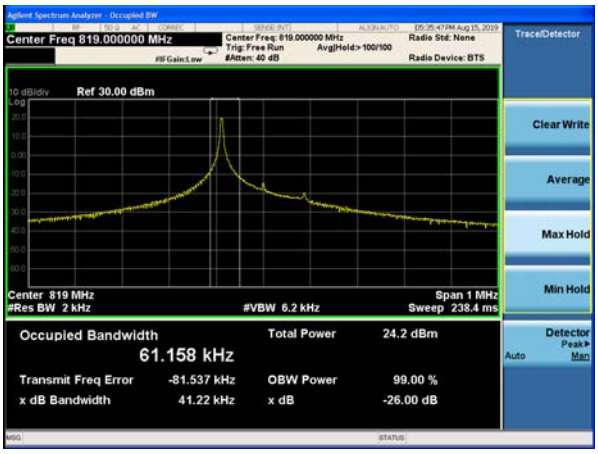

NB-IOT Band 26 BPSK 15kHz 1@0 CH-Middle

NB-IOT Band 26 BPSK 3.75kHz 1@0 CH-High

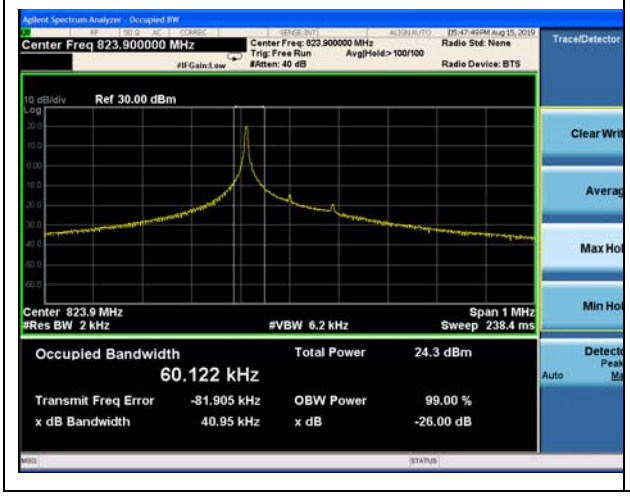

NB-IOT Band 26 BPSK 15kHz 1@0 CH-High

This report shall not be reproduced except in full, without the written approval of TA Technology (Shanghai) Co., Ltd.

NB-IOT Band 26 QPSK 3.75kHz 1@0 CH-Low

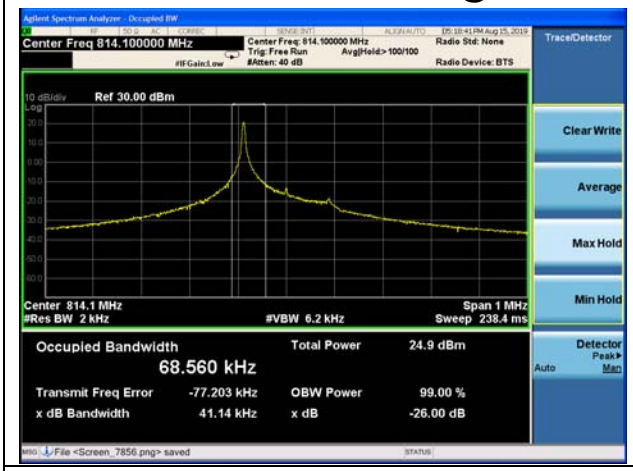

NB-IOT Band 26 QPSK 15kHz 1@0 CH-Low

NB-IOT Band 26 QPSK 3.75kHz 1@0 CH-Middle

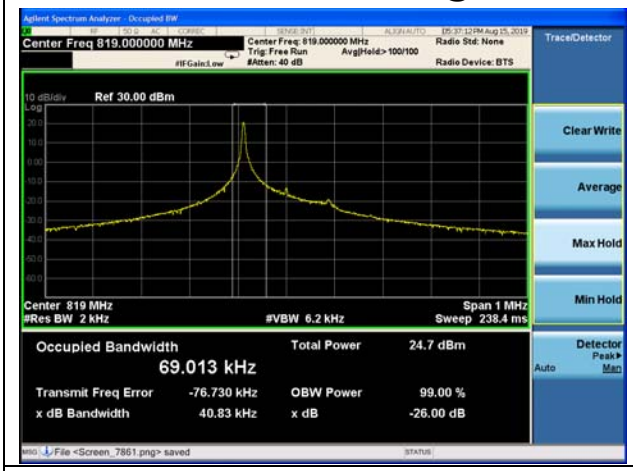

NB-IOT Band 26 QPSK 15kHz 1@0 CH-Middle

NB-IOT Band 26 QPSK 3.75kHz 1@0 CH-High

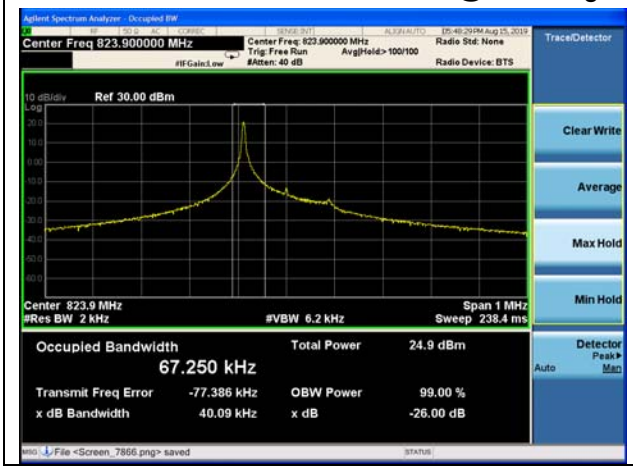

NB-IOT Band 26 QPSK 15kHz 1@0 CH-High

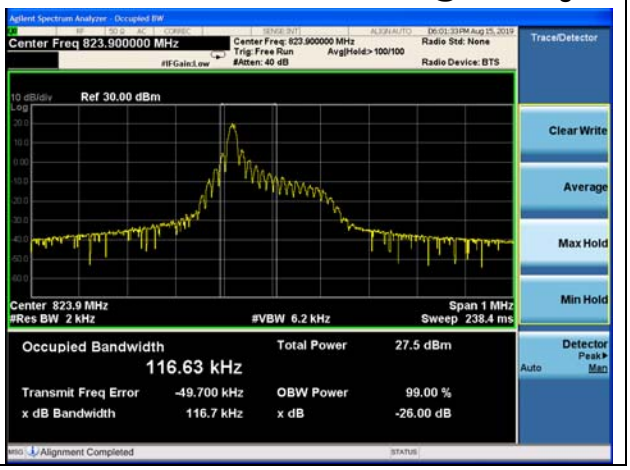

This report shall not be reproduced except in full, without the written approval of TA Technology (Shanghai) Co., Ltd.

NB-IOT Band 26 QPSK 15kHz 12@0 CH-Low

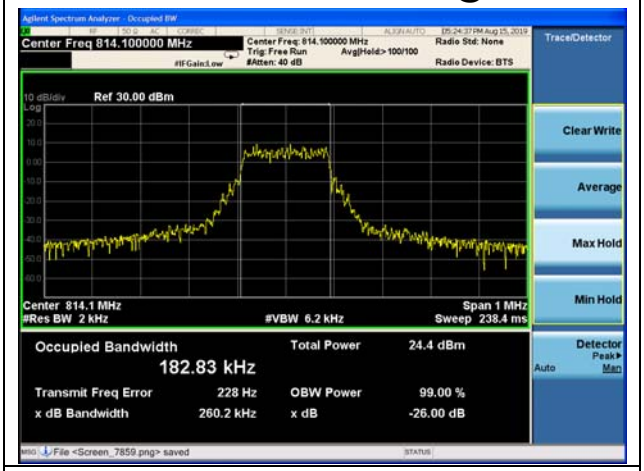

NB-IOT Band 26 QPSK 15kHz 12@0 CH-Middle

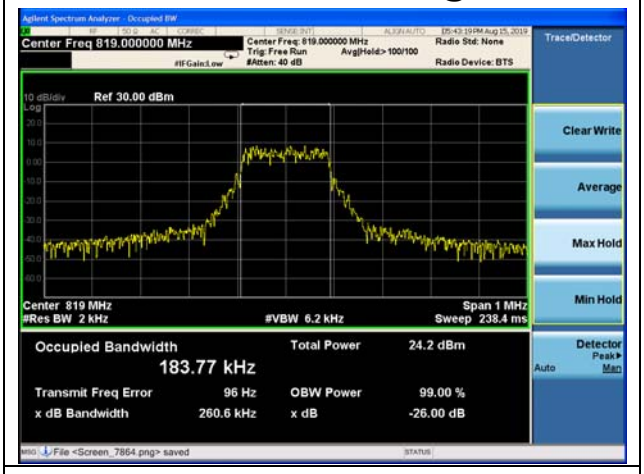

NB-IOT Band 26 QPSK 15kHz 12@0 CH-High

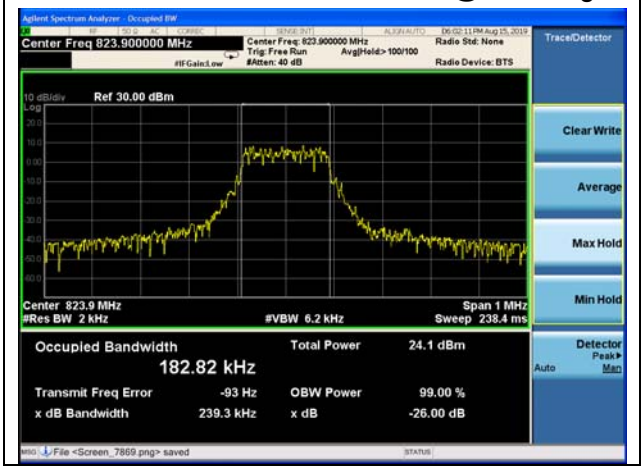

This report shall not be reproduced except in full, without the written approval of TA Technology (Shanghai) Co., Ltd.

5.4. Emission Mask

Ambient condition

Temperature	Relative humidity
21°C ~25°C	40%~60%

Method of Measurement

The EUT was connected to Spectrum Analyzer and Base Station Simulator via power Splitter. The band edge of the lowest and highest channels were measured. The average detector is used.
RBW is set to ⩾1%EBW, VBW is set to 3x RBW.
Spectrum analyzer plots are included on the following pages.

Test Setup

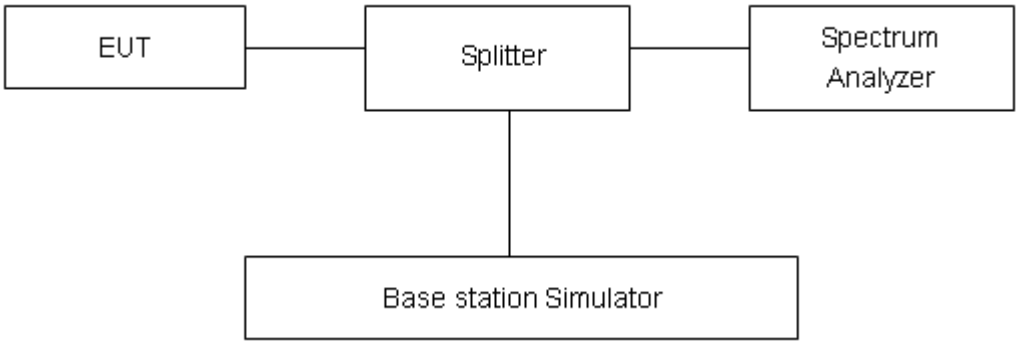

Limits

Rule Part 90.691(a) specifies that " For any frequency removed from the EA licensee's frequency block by up to and including 37.5 kHz, the power of any emission shall be attenuated below the transmitter power (P) in watts by at least 116 Log_{10}(f/6.1) decibels or 50 + 10 Log_{10}(P) decibels or 80 decibels, whichever is the lesser attenuation, where f is the frequency removed from the center of the outer channel in the block in kilohertz and where f is greater than 12.5 kHz."

Measurement Uncertainty

The assessed measurement uncertainty to ensure 95% confidence level for the normal distribution is with the coverage factor *k* = 1.96, *U*=0.684dB.

This report shall not be reproduced except in full, without the written approval of TA Technology (Shanghai) Co., Ltd.

Test Result:

NB-IOT Band 26 BPSK 3.75kHz 1@0 CH-Low

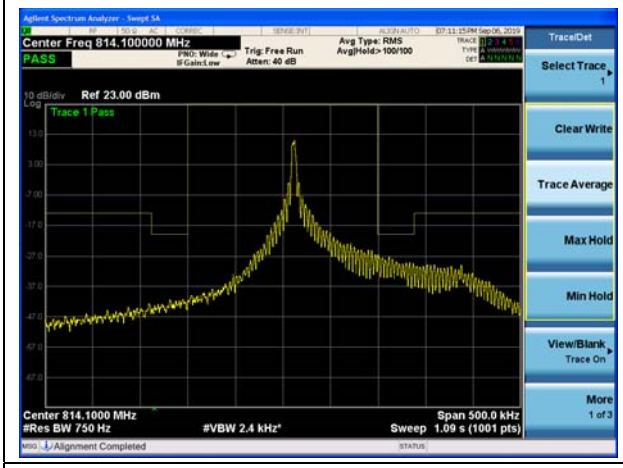

NB-IOT Band 26 BPSK 15kHz 1@0 CH-Low

NB-IOT Band 26 QPSK 3.75kHz 1@0 CH-Low

NB-IOT Band 26 QPSK 15kHz 1@0 CH-Low

NB-IOT Band 26 QPSK 15kHz 12@0 CH-Low

This report shall not be reproduced except in full, without the written approval of TA Technology (Shanghai) Co., Ltd.

5.5. Peak-to-Average Power Ratio (PAPR)

Ambient condition

Temperature	Relative humidity
21°C ~25°C	40%~60%

Methods of Measurement

Measure the total peak power and record as PPk. And measure the total average power and record as PAvg. Both the peak and average power levels must be expressed in the same logarithmic units (*e.g.*, dBm). Determine the PAPR from:
PAPR (dB) = PPk (dBm) - PAvg (dBm).

Test Setup

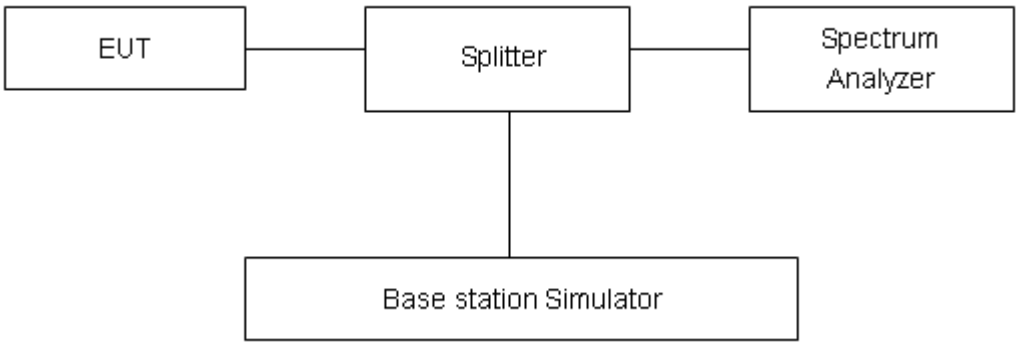

Limits

In measuring transmissions in this band using an average power technique, the peakto-average ratio (PAR) of the transmission may not exceed 13 dB in 24.232(d).

Measurement Uncertainty

The assessed measurement uncertainty to ensure 95% confidence level for the

normal distribution is with the coverage factor k = 2, U= 0.4 dB.

This report shall not be reproduced except in full, without the written approval of TA Technology (Shanghai) Co., Ltd.

Test Results

Mode	Modulation	Sub-carrier spacing (KHz)	Channel/ Frequency(MHz)	Peak-to-Average Power Ratio (PAPR)		
				Peak(dBm)	Avg(dBm)	PAPR(dB)
Band 26 Standalone	BPSK	3.75	26740/819	21.75	17.95	3.80
	QPSK	3.75	26740/819	21.31	17.93	3.38
	BPSK	15	26740/819	21.74	15.32	6.42
	QPSK	15	26740/819	21.69	15.31	6.38

This report shall not be reproduced except in full, without the written approval of TA Technology (Shanghai) Co., Ltd.

5.6. Frequency Stability

Ambient condition

Temperature	Relative humidity
21°C ~25°C	40%~60%

Method of Measurement

1. Frequency Stability (Temperature Variation)
   The temperature inside the climate chamber is varied from -40°C to +85°C in 10°C step size,
   (1) With all power removed, the temperature was decreased to 0°C and permitted to stabilize for three hours.
   (2) Measure the carrier frequency with the test equipment in a “call mode”. These measurements should be made within 1 minute of powering up the mobile station, to prevent significant self warming.
   (3) Repeat the above measurements at 10°C increments from -40°C to +85°C. Allow at least 1.5 hours at each temperature, un-powered, before making measurements.
2. Frequency Stability (Voltage Variation)
   The frequency stability shall be measured with variation of primary supply voltage as follows:
   (1) Vary primary supply voltage from 85 to 115 percent of the nominal value for other than hand carried battery equipment.
   (2) For hand carried, battery powered equipment, reduce primary supply voltage to the battery-operating end point which shall be specified by the manufacturer.
   This transceiver is specified to operate with an input voltage of between 3.3 V and 4.3 V, with a nominal voltage of 3.8V.
   .

Test setup

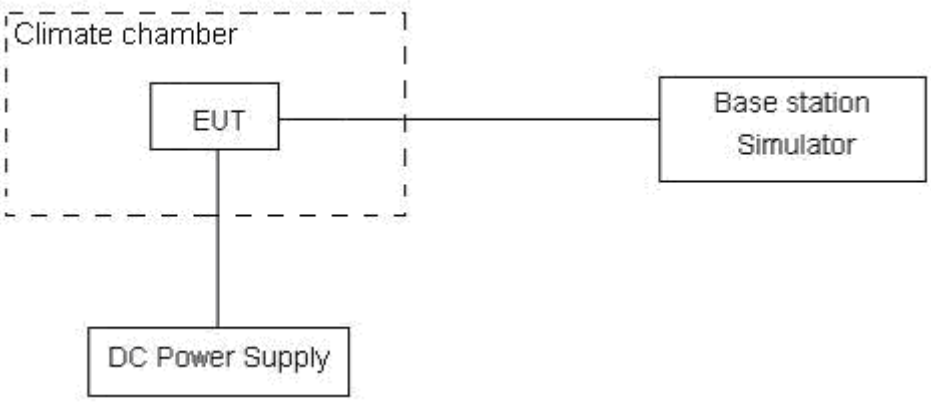

This report shall not be reproduced except in full, without the written approval of TA Technology (Shanghai) Co., Ltd.

Limits

According to the Sec. 90.213.(a) Unless noted elsewhere, transmitters used in the services governed by this part must have a minimum frequency stability as specified in the following table.
Minimum Frequency Stability
[Parts per million (ppm)]

Frequency range (MHz)	Fixed and base stations	Mobile stations	
		Over 2 watts output power	2 watts or less output power
809-824	1.5	2.5	2.5

Measurement Uncertainty

The assessed measurement uncertainty to ensure 99.75％ confidence level for the normal distribution is with the coverage factor k = 3,U= 0.01ppm.

This report shall not be reproduced except in full, without the written approval of TA Technology (Shanghai) Co., Ltd.

Test Result

NB-IOT Band 26						
Condition		Freq.Error (Hz)	Freq.Error (Hz)	Frequency Stability（ppm）	Frequency Stability（ppm）	Verdict
BANDWIDTH	3.75kHz					
Temperature	Voltage	16QAM	QPSK	16QAM	QPSK	
Normal（25℃）	Normal	12.41	4.00	0.00660	0.00213	PASS
Extreme（85℃）		5.92	3.38	0.00315	0.00180	PASS
Extreme（80℃）		15.95	8.02	0.00848	0.00427	PASS
Extreme（70℃）		7.02	1.34	0.00374	0.00071	PASS
Extreme（60℃）		17.24	13.23	0.00917	0.00704	PASS
Extreme（50℃）		10.67	7.97	0.00568	0.00424	PASS
Extreme（40℃）		10.68	3.34	0.00568	0.00178	PASS
Extreme（30℃）		15.02	16.73	0.00799	0.00890	PASS
Extreme（20℃）		16.89	13.92	0.00899	0.00741	PASS
Extreme（10℃）		3.21	9.45	0.00171	0.00503	PASS
Extreme（0℃）		15.30	15.69	0.00814	0.00835	PASS
Extreme（-10℃）		1.09	4.08	0.00058	0.00217	PASS
Extreme（-20℃）		14.07	3.00	0.00748	0.00160	PASS
Extreme（-30℃）		15.22	13.23	0.00809	0.00704	PASS
Extreme（-40℃）		5.42	11.79	0.00288	0.00627	PASS
25℃	LV	13.52	1.34	0.00719	0.00071	PASS
	HV	15.41	4.95	0.00820	0.00263	PASS
NB-IOT Band 26						
Condition		Freq.Error (Hz)	Freq.Error (Hz)	Frequency Stability（ppm）	Frequency Stability（ppm）	Verdict
BANDWIDTH	15kHz					
Temperature	Voltage	16QAM	QPSK	16QAM	QPSK	
Normal（25℃）	Normal	1.360	4.89	0.00072	0.00260	PASS
Extreme（85℃）		15.39	3.90	0.00819	0.00207	PASS
Extreme（80℃）		10.76	4.63	0.00572	0.00246	PASS
Extreme（70℃）		3.83	10.97	0.00203	0.00584	PASS
Extreme（60℃）		10.51	11.27	0.00559	0.00599	PASS
Extreme（50℃）		13.70	15.31	0.00729	0.00814	PASS
Extreme（40℃）		15.69	9.06	0.00834	0.00482	PASS
Extreme（30℃）		1.160	4.31	0.00062	0.00229	PASS
Extreme（20℃）		16.45	10.00	0.00875	0.00532	PASS
Extreme（10℃）		16.93	14.84	0.00900	0.00790	PASS
Extreme（0℃）		1.350	11.67	0.00072	0.00621	PASS

This report shall not be reproduced except in full, without the written approval of TA Technology (Shanghai) Co., Ltd.

Extreme（-10℃）		6.57	14.71	0.00349	0.00783	PASS
Extreme（-20℃）		5.48	5.97	0.00292	0.00318	PASS
Extreme（-30℃）		10.14	12.72	0.00539	0.00677	PASS
Extreme（-40℃）		9.50	2.54	0.00505	0.00135	PASS
25℃	LV	12.85	12.30	0.00684	0.00654	PASS
	HV	11.71	17.47	0.00623	0.00929	PASS

This report shall not be reproduced except in full, without the written approval of TA Technology (Shanghai) Co., Ltd.

5.7. Spurious Emissions at Antenna Terminals

Ambient condition

Temperature	Relative humidity
21°C ~25°C	40%~60%

Method of Measurement

The EUT was connected to Spectrum Analyzer and Base Station Simulator via power Splitter. The measurement is carried out using a spectrum analyzer. The spectrum analyzer scans from 30MHz to the 10th harmonic of the carrier. The peak detector is used. RBW are set to 100 kHz and VBW are set to 300 kHz for below 1G, RBW are set to 1MHz and VBW are set to 3MHz for above 1G, Sweep is set to ATUO.

Test setup

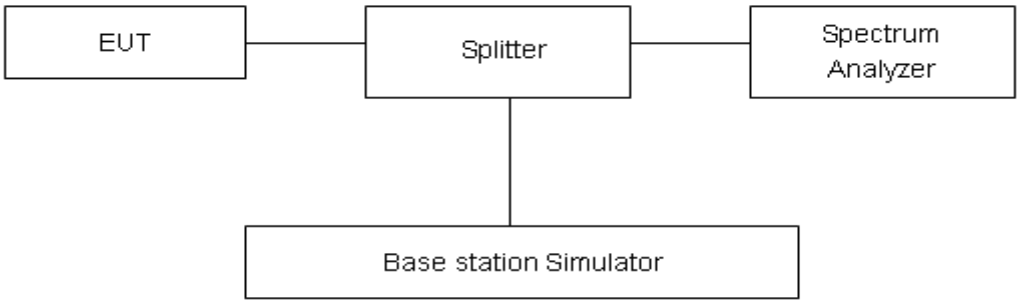

Limits

Rule Part 90.691 specifies that “The power of any emission outside of the authorized operating frequency ranges must be attenuated below the transmitting power (P) by a factor of at least 43 + 10 log (P) dB.”

Limit	-13 dBm

Measurement Uncertainty

The assessed measurement uncertainty to ensure 99.75% confidence level for the normal distribution is with the coverage factor *k* = 1.96.

Frequency	Uncertainty
100kHz-1GHz	0.684 dB
1GHz-12.75GHz	1.407 dB

This report shall not be reproduced except in full, without the written approval of TA Technology (Shanghai) Co., Ltd.

Test Result

If disturbances were found more than 20dB below limit line, the mark is not required for the EUT.
The signal beyond the limit is carrier.

NB-IOT Band 26 CH-Low 30MHz-1GHz

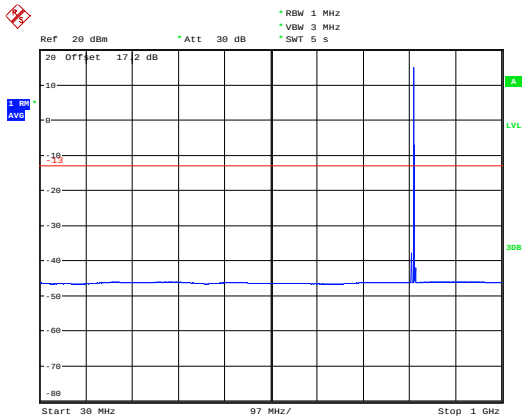

Date: 28.AUG.2019 15:37:36

NB-IOT Band 26 CH-Low 1GHz~9GHz

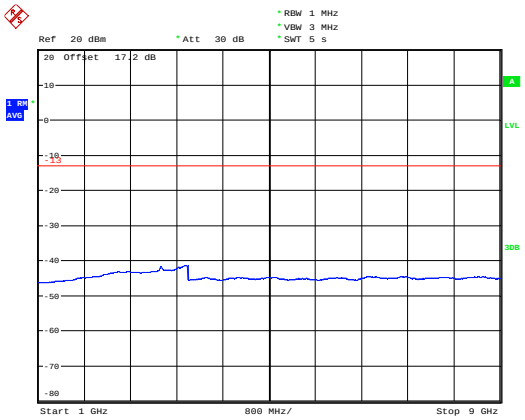

Date: 28.AUG.2019 15:50:47

NB-IOT Band 26 CH-Middle 30MHz-1GHz

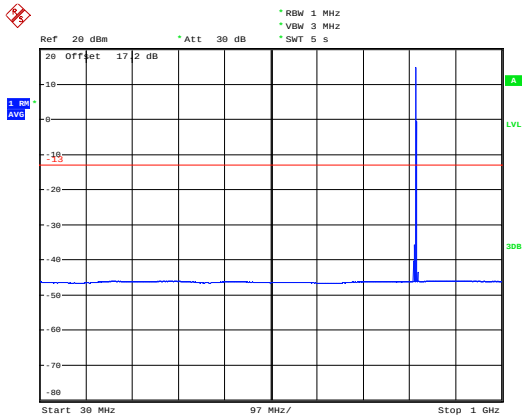

Date: 28.AUG.2019 15:44:46

NB-IOT Band 26 CH-Middle 1GHz~9GHz

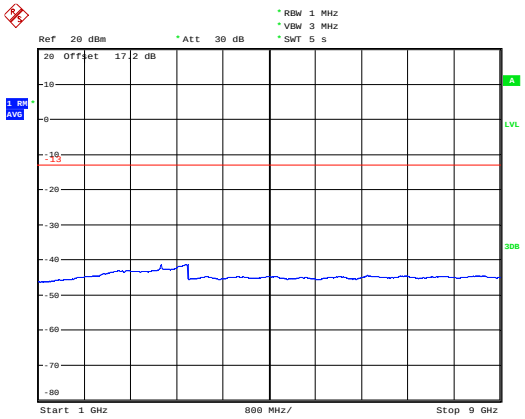

Date: 28.AUG.2019 15:57:06

NB-IOT Band 26 CH-High 30MHz-1GHz

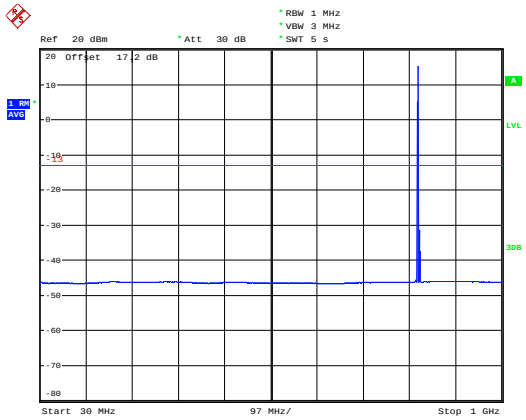

Date: 28.AUG.2019 15:47:51

NB-IOT Band 26 CH-High 1GHz~9GHz

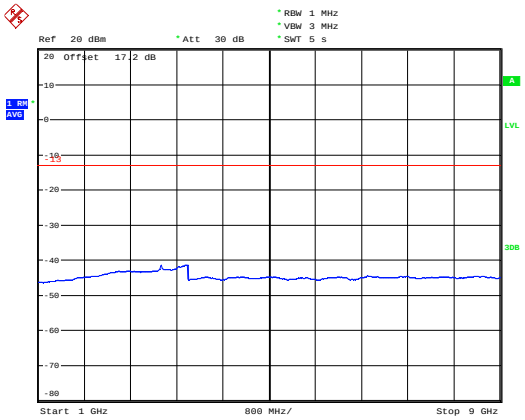

Date: 28.AUG.2019 15:58:33

This report shall not be reproduced except in full, without the written approval of TA Technology (Shanghai) Co., Ltd.

5.8. Radiates Spurious Emission

Ambient condition

Temperature	Relative humidity
21°C ~25°C	40%~60%

Method of Measurement

1. The testing follows FCC KDB 971168 v03r01 Section 5.8 and ANSI C63.26 (2015).
2. Below 1GHz: The EUT is placed on a turntable 0.8 meters above the ground in the chamber, 3 meter away from the antenna. The maximal emission value is acquired by adjusting the antenna height, polarisation and turntable azimuth. Normally, the height range of antenna is 1 m to 4 m, the azimuth range of turntable is 0° to 360°, and the receive antenna has two polarizations Vertical (V) and Horizontal (H). Above 1GHz: (Note: the FCC's permission to use 1.5m as an alternative per TCBC Conf call of Dec. 2, 2014.) The EUT is placed on a turntable 1.5 meters above the ground in the chamber, 3 meter away from the antenna. The maximal emission value is acquired by adjusting the antenna height, polarisation and turntable azimuth. Normally, the height range of antenna is 1 m to 4 m, the azimuth range of turntable is 0° to 360°, and the receive antenna has two polarizations Vertical (V) and Horizontal (H).
3. A loop antenna, A log-periodic antenna or horn antenna shall be substituted in place of the EUT. The log-periodic antenna will be driven by a signal generator and the level will be adjusted till the same power value on the spectrum analyzer or receiver. The level of the spurious emissions can be calculated through the level of the signal generator, cable loss, the gain of the substitution antenna and the reading of the spectrum analyzer or receiver.
4. The EUT is then put into continuously transmitting mode at its maximum power level during the test. Set Test Receiver or Spectrum RBW=200Hz,VBW=600Hz for 9kHz150kHz , RBW=10kHz, VBW=30kHz 150kHz-30MHz , RBW=100kHz,VBW=300kHz for 30MHz to 1GHz and RBW=1MHz, VBW=3MHz for above 1GHz, And the maximum value of the receiver should be recorded as (Pr).
5. The EUT shall be replaced by a substitution antenna. In the chamber, an substitution antenna for the frequency band of interest is placed at the reference point of the chamber. An RF Signal source for the frequency band of interest is connected to the substitution antenna with a cable that has been constructed to not interfere with the radiation pattern of the antenna. A power (PMea) is applied to the input of the substitution antenna, and adjust the level of the signal generator output until the value of the receiver reach the previously recorded (Pr). The power of signal source (PMea) is recorded. The test should be performed by rotating the test item and adjusting the receiving antenna polarization.
6. A amplifier should be connected to the Signal Source output port. And the cable should be connect between the Amplifier and the Substitution Antenna. The cable loss (Pcl) ,the Substitution Antenna Gain (Ga) and the Amplifier Gain (PAg) should be recorded after test.
7. The measurement results are obtained as described below:
Power(EIRP)=PMea- PAg - Pcl + Ga
The measurement results are amend as described below:
Power(EIRP)=PMea- Pcl + Ga
8. This value is EIRP since the measurement is calibrated using an antenna of known gain (2.15 dBi)

This report shall not be reproduced except in full, without the written approval of TA Technology (Shanghai) Co., Ltd.

and known input power. ERP can be calculated from EIRP by subtracting the gain of the dipole, ERP = EIRP-2.15dBi.

The modulation mode and RB allocation refer to section 5.1, using the maximum output power configuration.

Test setup

9KHz ~ 30MHz

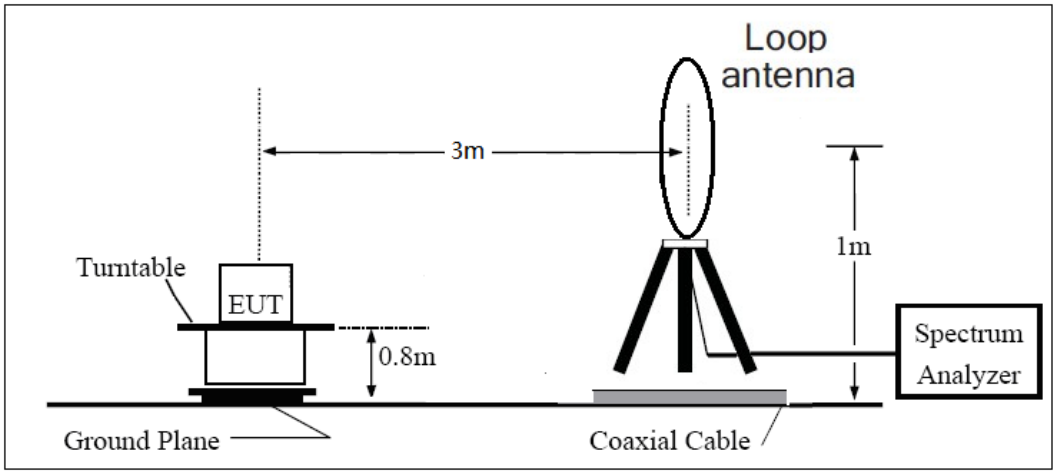

30MHz~~~ 1GHz

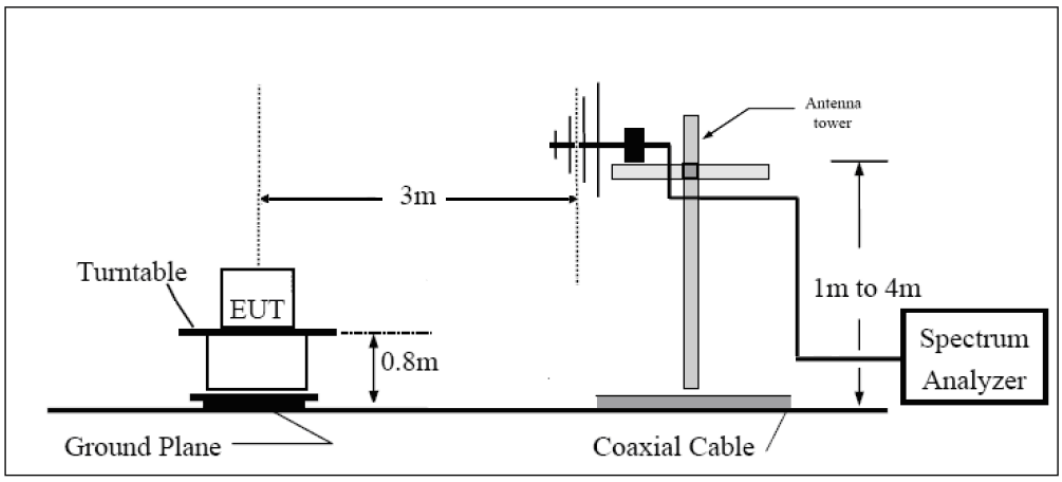

Above 1GHz

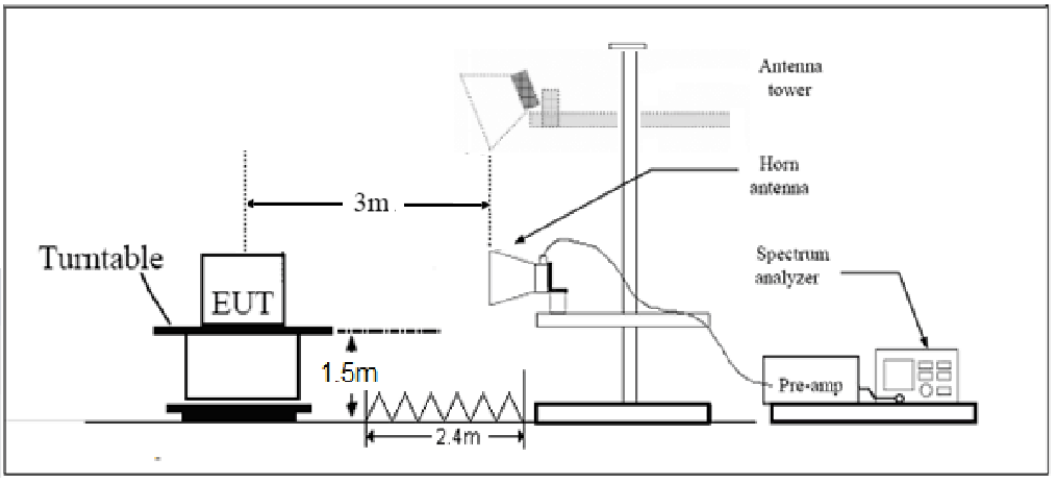

This report shall not be reproduced except in full, without the written approval of TA Technology (Shanghai) Co., Ltd.

Limits

Rule Part 90.691 specifies that “The power of any emission outside of the authorized operating frequency ranges must be attenuated below the transmitting power (P) by a factor of at least 43 + 10 log(P) dB.”

Limit	-13 dBm

Measurement Uncertainty

The assessed measurement uncertainty to ensure 95％ confidence level for the normal distribution is with the coverage factor *k* = 1.96, *U*= 3.55 dB.

This report shall not be reproduced except in full, without the written approval of TA Technology (Shanghai) Co., Ltd.

Test Result

Sweep the whole frequency band through the range from 30MHz to the 10th harmonic of the carrier, the emissions below the noise floor will not be recorded in the report.

NB-IOT Band 26 CH-Low

Harmonic	Frequency (MHz)	SG (dBm)	Cable Loss (dB)	Gain (dBi)	Antenna Polarization	ERP Level (dBm)	Limit (dBm)	Margin (dB)	Azimuth (deg)
2	1648.0	-58.75	2.00	10.75	vertical	-52.15	-13.00	39.15	135
3	2472.0	-51.59	2.51	11.05	vertical	-45.20	-13.00	32.20	90
4	3296.0	-58.72	4.20	11.15	vertical	-53.92	-13.00	40.92	90
5	4120.0	-59.72	5.20	11.15	vertical	-55.92	-13.00	42.92	0
6	4944.0	-60.25	5.50	11.95	vertical	-55.95	-13.00	42.95	45
7	5768.0	-60.63	5.70	13.55	vertical	-54.93	-13.00	41.93	180
8	6592.0	-58.78	6.30	13.75	vertical	-53.48	-13.00	40.48	225
9	7416.0	-53.87	6.80	13.85	vertical	-48.97	-13.00	35.97	135
10	8240.0	-54.00	6.90	14.25	vertical	-48.80	-13.00	35.80	90
Note: 1.The other Spurious RF Radiated emissions level is no more than noise floor. 2.The worst emission was found in the antenna is Horizontal position.									

NB-IOT Band 26 CH-Middle

Harmonic	Frequency (MHz)	SG (dBm)	Cable Loss (dB)	Gain (dBi)	Antenna Polarization	ERP Level (dBm)	Limit (dBm)	Margin (dB)	Azimuth (deg)
2	1673.0	-57.48	2.00	10.75	vertical	-50.88	-13.00	37.88	90
3	2509.5	-51.42	2.51	11.05	vertical	-45.03	-13.00	32.03	315
4	3346.0	-60.31	4.20	11.15	vertical	-55.51	-13.00	42.51	180
5	4182.5	-58.57	5.20	11.15	vertical	-54.77	-13.00	41.77	315
6	5019.0	-59.22	5.50	11.95	vertical	-54.92	-13.00	41.92	90
7	5855.5	-60.35	5.70	13.55	vertical	-54.65	-13.00	41.65	45
8	6692.0	-57.38	6.30	13.75	vertical	-52.08	-13.00	39.08	135
9	7528.5	-55.16	6.80	13.85	vertical	-50.26	-13.00	37.26	225
10	8365.0	-55.69	6.90	14.25	vertical	-50.49	-13.00	37.49	0
Note: 1.The other Spurious RF Radiated emissions level is no more than noise floor. 2.The worst emission was found in the antenna is Horizontal position.									

This report shall not be reproduced except in full, without the written approval of TA Technology (Shanghai) Co., Ltd.

NB-IOT Band 26 CH-High

Harmonic	Frequency (MHz)	SG (dBm)	Cable Loss (dB)	Gain (dBi)	Antenna Polarization	ERP Level (dBm)	Limit (dBm)	Margin (dB)	Azimuth (deg)
2	1697.8	-55.48	2.00	10.75	vertical	-48.88	-13.00	35.88	135
3	2546.7	-53.01	2.51	11.05	vertical	-46.62	-13.00	33.62	0
4	3395.6	-61.79	4.20	11.15	vertical	-56.99	-13.00	43.99	180
5	4244.5	-59.61	5.20	11.15	vertical	-55.81	-13.00	42.81	225
6	5093.4	-58.04	5.50	11.95	vertical	-53.74	-13.00	40.74	0
7	5942.3	-60.00	5.70	13.55	vertical	-54.30	-13.00	41.30	135
8	6791.2	-58.31	6.30	13.75	vertical	-53.01	-13.00	40.01	45
9	7640.1	-54.99	6.80	13.85	vertical	-50.09	-13.00	37.09	90
10	8489.0	-56.07	6.90	14.25	vertical	-50.87	-13.00	37.87	135

Note: 1.The other Spurious RF Radiated emissions level is no more than noise floor.
2.The worst emission was found in the antenna is Horizontal position.

This report shall not be reproduced except in full, without the written approval of TA Technology (Shanghai) Co., Ltd.

6. Main Test Instruments

Name	Manufacturer	Type	Serial Number	Calibration Date	Expiration Date
Base Station Simulator	R&S	CMW500	113824	2019-05-19	2020-05-18
Power Splitter	Hua Xiang	SHX-GF2-2-13	10120101	/	/
Spectrum Analyzer	Agilent	N9010A	MY50210259	2019-05-19	2020-05-18
Signal Analyzer	R&S	FSV30	100815	2018-12-16	2019-12-15
Trilog Antenna	SCHWARZBECK	VUBL 9163	9163-201	2017-11-18	2020-11-17
Horn Antenna	R&S	HF907	100126	2018-07-07	2020-07-06
Signal generator	R&S	SMF 100A	102235	2019-05-19	2020-05-18
Climatic Chamber	ESPEC	SU-242	93000506	2017-12-17	2020-12-16
RF Cable	Agilent	SMA 15cm	0001	2019-06-14	2019-09-13
Software	R&S	EMC32	9.26.0	/	/

*******END OF REPORT *******

This report shall not be reproduced except in full, without the written approval of TA Technology (Shanghai) Co., Ltd.