BG95-M3 Mini PCIe

Hardware Design

LPWA Module Series

Rev. BG95-M3_Mini_PCIe_Hardware_Design_V1.0

Date: 2020-05-15

Status: Released

www.quectel.com

Our aim is to provide customers with timely and comprehensive service. For any assistance, please contact our company headquarters:

Quectel Wireless Solutions Co., Ltd.
Building 5, Shanghai Business Park Phase III (Area B), No.1016 Tianlin Road, Minhang District, Shanghai 200233, China
Tel: +86 21 5108 6236
Email: info@quectel.com

Or our local office. For more information, please visit:
http://www.quectel.com/support/sales.htm

For technical support, or to report documentation errors, please visit:
http://www.quectel.com/support/technical.htm
Or email to: support@quectel.com

GENERAL NOTES

QUECTEL OFFERS THE INFORMATION AS A SERVICE TO ITS CUSTOMERS. THE INFORMATION PROVIDED IS BASED UPON CUSTOMERS' REQUIREMENTS. QUECTEL MAKES EVERY EFFORT TO ENSURE THE QUALITY OF THE INFORMATION IT MAKES AVAILABLE. QUECTEL DOES NOT MAKE ANY WARRANTY AS TO THE INFORMATION CONTAINED HEREIN, AND DOES NOT ACCEPT ANY LIABILITY FOR ANY INJURY, LOSS OR DAMAGE OF ANY KIND INCURRED BY USE OF OR RELIANCE UPON THE INFORMATION. ALL INFORMATION SUPPLIED HEREIN IS SUBJECT TO CHANGE WITHOUT PRIOR NOTICE.

COPYRIGHT

THE INFORMATION CONTAINED HERE IS PROPRIETARY TECHNICAL INFORMATION OF QUECTEL WIRELESS SOLUTIONS CO., LTD. TRANSMITTING, REPRODUCTION, DISSEMINATION AND EDITING OF THIS DOCUMENT AS WELL AS UTILIZATION OF THE CONTENT ARE FORBIDDEN WITHOUT PERMISSION. OFFENDERS WILL BE HELD LIABLE FOR PAYMENT OF DAMAGES. ALL RIGHTS ARE RESERVED IN THE EVENT OF A PATENT GRANT OR REGISTRATION OF A UTILITY MODEL OR DESIGN.

Copyright © Quectel Wireless Solutions Co., Ltd. 2020. All rights reserved.

About the Document

Revision History

Version	Date	Author	Description
1.0	2020-05-15	Speed SUN/ Watt ZHU/ Hyman DING	Initial

Contents

About the Document **2**
Contents **3**
Table Index **5**
Figure Index **6**

1 Introduction **7**
1.1. Safety Information 9

2 Product Concept **10**
2.1. General Description 10
2.2. Key Features 11
2.3. Functional Diagram 13

3 Application Interfaces **14**
3.1. Pin Assignment 14
3.2. Pin Description 15
3.1. Operating Modes 18
3.2. Power Supply 19
3.3. (U)SIM Interface 20
3.4. USB Interface 22
3.5. UART Interface 24
3.6. PCM and I2C Interfaces* 25
3.7. Control and Indication Interfaces 26
3.7.1. RI 26
3.7.2. W_DISABLE# 27
3.7.3. PERST# 27
3.7.4. LED_WWAN# 28
3.7.5. WAKE# 29

4 GNSS Receiver **30**
4.1. General Description 30
4.2. GNSS Performance 30

5 Antenna Connection **32**
5.1. Main Antenna Connector 32
5.1.1. Description of Main Antenna Connector 32
5.1.2. Operating Frequency 33
5.2. GNSS Antenna Connector 34
5.2.1. Description of GNSS Antenna Connector 34
5.2.2. GNSS Frequency 34
5.3. Antenna Requirements 35
5.4. Recommended Mating Plugs for Antenna Connection 35

6 Electrical, Reliability and Radio Characteristics **38**

6.1. General Description 38
6.2. Power Supply Requirements 38
6.3. Digital I/O Characteristics 38
6.4. RF Characteristics 39
6.5. ESD Characteristics 41
6.6. Current Consumption 41

7 Dimensions and Packaging 45
7.1. General Description 45
7.2. Mechanical Dimensions of BG95-M3 Mini PCIe 45
7.3. Standard Dimensions of Mini PCI Express 46
7.4. Packaging Specification 47

8 Appendix A References 48
9 Appendix B GPRS Coding Schemes 51
10 Appendix C GPRS Multi-slot Classes 52
11 Appendix D EDGE Modulation and Coding Schemes 54

Table Index

Table 1: Description of BG95-M3 Mini PCIe 10
Table 2: Key Features of BG95-M3 Mini PCIe 11
Table 3: Definition of I/O Parameters 15
Table 4: Pin Description 16
Table 5: Overview of Operating Modes 19
Table 6: Definition of VCC_3V3 and GND Pins 19
Table 7: Pin Definition of (U)SIM Interface 20
Table 8: Pin Definition of UART Interface 24
Table 9: Pin Definition of PCM and I2C Interfaces 25
Table 10: Pin Definition of Control and Indication Interfaces 26
Table 11: Airplane Mode Control (Hardware Method) 27
Table 12: Airplane Mode Control (Software Method) 27
Table 13: Indications of Network Status (AT+QCFG="ledmode",0, Default Setting) 28
Table 14: Indications of Network Status (AT+QCFG="ledmode",1) 29
Table 15: GNSS Performance 30
Table 16: Description of Main Antenna Connector 32
Table 17: Operating Frequency 33
Table 18: Description of GNSS Antenna Connector 34
Table 19: GNSS Frequency 34
Table 20: Antenna Requirements 35
Table 21: Power Supply Requirements 38
Table 22: 3.3 V Digital I/O Characteristics 39
Table 23: 1.8 V Digital I/O Characteristics 39
Table 24: Conducted RF Output Power 39

Figure Index

Figure 1: Functional Diagram 13
Figure 2: Pin Assignment 15
Figure 3: Reference Design of Power Supply 20
Figure 4: Reference Design of (U)SIM Interface with 8-Pin (U)SIM Card Connector 21
Figure 5: Reference Design of (U)SIM Interface with 6-Pin (U)SIM Card Connector 21
Figure 6: Reference Design of USB Interface 23
Figure 7: Reference Design of UART Interface 24
Figure 8: Reference Design of PCM and I2C Application with Audio Codec 25
Figure 9: RI Behavior 27
Figure 10: Reset Timing 28
Figure 11: Reference Design of LED_WWAN# 28
Figure 12: WAKE# Behaviors 29
Figure 13: Main and GNSS Antenna Connectors 32
Figure 14: Dimensions of Receptacles (Unit: mm) 36
Figure 15: Mechanicals of U.FL-LP Mating Plugs 36
Figure 16: Space Factor of Mated Connectors (Unit: mm) 37
Figure 17: Mechanical Dimensions of BG95-M3 Mini PCIe 45
Figure 18: Standard Dimensions of Mini PCI Express 46
Figure 19: Dimensions of the Mini PCI Express Connector (Molex 679105700) 47

1 Introduction

This document defines Quectel BG95-M3 Mini PCIe module, and describes its air interfaces and hardware interfaces which are connected with customers' applications.

This document helps customers quickly understand the interface specifications, electrical characteristics, mechanical specifications and other related information of the module. To facilitate application designs, it also includes some reference designs for customers' reference. The document, coupled with application notes and user guides, makes it easy to design and set up mobile applications with BG95-M3 Mini PCIe.

1.2. FCC Certification Requirements.
According to the definition of mobile and fixed device is described in Part 2.1091(b), this device is a mobile device.
And the following conditions must be met:
1. This Modular Approval is limited to OEM installation for mobile and fixed applications only. The antenna installation and operating configurations of this transmitter, including any applicable source-based time-averaging duty factor, antenna gain and cable loss must satisfy MPE categorical Exclusion Requirements of 2.1091.
2. The EUT is a mobile device; maintain at least a 20 cm separation between the EUT and the user's body and must not transmit simultaneously with any other antenna or transmitter.
3.A label with the following statements must be attached to the host end product: This device contains FCC ID: XMR201910BG96M3.
4.To comply with FCC regulations limiting both maximum RF output power and human exposure to RF radiation, maximum antenna gain (including cable loss) must not exceed:

- GSM850:≤8.571 dBi
- GSM1900:≤10.030dBi
- Catm LTE Band2/25:≤11.000dBi
- Catm LTE Band4/66:≤8.000dBi
- Catm LTE Band5/26:≤12.541dBi
- Catm LTE Band12/85:≤11.798dBi
- Catm LTE Band13:≤12.214dBi
- Catm LTE Band14:≤12.272 dBi
- NB LTE Band2/25:≤11.000dBi
- NB LTE Band4/66:≤8.000dBi
- NB LTE Band5/26:≤12.541dBi
- NB LTE Band12/85:≤11.798dBi
- NB LTE Band13:≤12.214dBi

❒ NB LTE Band14:⩽12.272 dBi

❒NB LTE Band71:⩽11.687 dBi

5. This module must not transmit simultaneously with any other antenna or transmitter
6. The host end product must include a user manual that clearly defines operating requirements and conditions that must be observed to ensure compliance with current FCC RF exposure guidelines.
For portable devices, in addition to the conditions 3 through 6 described above, a separate approval is required to satisfy the SAR requirements of FCC Part 2.1093

If the device is used for other equipment that separate approval is required for all other operating configurations, including portable configurations with respect to 2.1093 and different antenna configurations.
For this device, OEM integrators must be provided with labeling instructions of finished products. Please refer to KDB784748 D01 v07, section 8. Page 6/7 last two paragraphs:
A certified modular has the option to use a permanently affixed label, or an electronic label. For a permanently affixed label, the module must be labeled with an FCC ID - Section 2.926 (see 2.2 Certification (labeling requirements) above). The OEM manual must provide clear instructions explaining to the OEM the labeling requirements, options and OEM user manual instructions that are required (see next paragraph).
For a host using a certified modular with a standard fixed label, if (1) the module's FCC ID is not visible when installed in the host, or (2) if the host is marketed so that end users do not have straightforward commonly used methods for access to remove the module so that the FCC ID of the module is visible; then an additional permanent label referring to the enclosed module:"Contains Transmitter Module FCC ID: XMR201910BG96M3" or "Contains FCC ID: XMR201910BG96M3" must be used. The host OEM user manual must also contain clear instructions on how end users can find and/or access the module and the FCC ID.
The final host / module combination may also need to be evaluated against the FCC Part 15B criteria for unintentional radiators in order to be properly authorized for operation as a Part 15 digital device.
The user's manual or instruction manual for an intentional or unintentional radiator shall caution the user that changes or modifications not expressly approved by the party responsible for compliance could void the user's authority to operate the equipment. In cases where the manual is provided only in a form other than paper, such as on a computer disk or over the Internet, the information required by this section may be included in the manual in that alternative form, provided the user can reasonably be expected to have the capability to access information in that form.
This device complies with part 15 of the FCC Rules. Operation is subject to the following two conditions: (1) This device may not cause harmful interference, and (2) this device must accept any interference received, including interference that may cause undesired operation.
Changes or modifications not expressly approved by the manufacturer could void the user's authority to operate the equipment.

1.1. Safety Information

The following safety precautions must be observed during all phases of operation, such as usage, service or repair of any cellular terminal or mobile incorporating the module. Manufacturers of the cellular terminal should notify users and operating personnel of the following safety information by incorporating these guidelines into all manuals of the product. Otherwise, Quectel assumes no liability for customers' failure to comply with these precautions.

	Full attention must be paid to driving at all times in order to reduce the risk of an accident. Using a mobile while driving (even with a handsfree kit) causes distraction and can lead to an accident. Please comply with laws and regulations restricting the use of wireless devices while driving.
	Switch off the cellular terminal or mobile before boarding an aircraft. The operation of wireless appliances in an aircraft is forbidden to prevent interference with communication systems. If there is an Airplane Mode, it should be enabled prior to boarding an aircraft. Please consult the airline staff for more restrictions on the use of wireless devices on an aircraft.
	Wireless devices may cause interference on sensitive medical equipment, so please be aware of the restrictions on the use of wireless devices when in hospitals, clinics or other healthcare facilities.
	Cellular terminals or mobiles operating over radio signals and cellular network cannot be guaranteed to connect in all possible conditions (for example, with unpaid bills or with an invalid (U)SIM card). When emergent help is needed in such conditions, please remember using emergency call. In order to make or receive a call, the cellular terminal or mobile must be switched on in a service area with adequate cellular signal strength.
	The cellular terminal or mobile contains a transmitter and receiver. When it is ON, it receives and transmits radio frequency signals. RF interference can occur if it is used close to TV set, radio, computer or other electric equipment.
	In locations with potentially explosive atmospheres, obey all posted signs to turn off wireless devices such as mobile phone or other cellular terminals. Areas with potentially explosive atmospheres include fuelling areas, below decks on boats, fuel or chemical transfer or storage facilities, areas where the air contains chemicals or particles such as grain, dust and metal powders.

2 Product Concept

2.1. General Description

BG95-M3 Mini PCIe is an embedded IoT (LTE Cat M1, LTE Cat NB2 and EGPRS) wireless communication module with PCI Express Mini Card 1.2 standard interface. It provides data connectivity on LTE-FDD and GPRS/EGPRS networks, and supports half-duplex operation in LTE network. It also provides GNSS and voice [1)] functionality to meet customers' specific application demands.

The module can be applied in the following fields:

- Wireless POS systems
- Tracking systems
- Intelligent meter reading systems
- Security systems

Table 1: Description of BG95-M3 Mini PCIe

Item	Description
LTE Cat M1	LTE-FDD: B1/B2/B3/B4/B5/B8/B12/B13/B18/B19/B20/B25/B26/B27/B28/B66/B85
LTE Cat NB2	LTE-FDD: B1/B2/B3/B4/B5/B8/B12/B13/B18/B19/B20/B25/B28/B66/B71/B85
EGPRS	850/900/1800/1900 MHz
Power Class	Power Class 5 (21 dBm) @ LTE bands
GNSS	GPS, GLONASS, BeiDou, Galileo, QZSS
Digital Audio	Support PCM for VoLTE and GSM CS voice only

NOTE

[1)] BG95-M3 Mini PCIe supports VoLTE (Voice over LTE) under LTE Cat M1 network and CS voice under GSM network.

2.2. Key Features

The following table describes the detailed features of BG95-M3 Mini PCIe module.

Table 2: Key Features of BG95-M3 Mini PCIe

Feature	Details
Function Interface	PCI Express Mini Card 1.2 Standard Interface
Power Supply	● Supply voltage: 3.0–3.6 V ● Typical supply voltage: 3.3 V
Transmitting Power	● Class 5 (21 dBm +1.7/-3 dB) for LTE-FDD bands ● Class 4 (33 dBm ±2 dB) for GSM850 ● Class 4 (33 dBm ±2 dB) for EGSM900 ● Class 1 (30 dBm ±2 dB) for DCS1800 ● Class 1 (30 dBm ±2 dB) for PCS1900 ● Class E2 (27 dBm ±3 dB) for GSM850 8-PSK ● Class E2 (27 dBm ±3 dB) for EGSM900 8-PSK ● Class E2 (26 dBm ±3 dB) for DCS1800 8-PSK ● Class E2 (26 dBm ±3 dB) for PCS1900 8-PSK
LTE Features	● Support 3GPP Rel-14 ● Support LTE Cat M1 and LTE Cat NB2 ● Support 1.4 MHz RF bandwidth for LTE Cat M1 ● Support 200 kHz RF bandwidth for LTE Cat NB2 ● Cat M1: Max. 588 kbps (DL)/1119 kbps (UL) ● Cat NB2: Max.127 kbps (DL)/158.5 kbps (UL)
GSM Features	**GPRS:** ● Support GPRS multi-slot class 33 (33 by default) ● Coding scheme: CS-1, CS-2, CS-3 and CS-4 ● Max. 107 kbps (DL)/85.6 kbps (UL) **EDGE:** ● Support EDGE multi-slot class 33 (33 by default) ● Support GMSK and 8-PSK for different MCS (Modulation and Coding Scheme) ● Downlink coding schemes: MCS 1–9 ● Uplink coding schemes: MCS 1–9 ● Max. 296 kbps (DL)/236.8 kbps (UL)
Internet Protocol Features	● Support PPP/TCP/UDP/SSL/TLS/FTP(S)/HTTP(S)/NITZ/PING/MQTT/ ● LwM2M/CoAP/IPv6 protocols ● Support PAP (Password Authentication Protocol) and CHAP (Challenge Handshake Authentication Protocol) protocols which are usually used for PPP connections

SMS	● Text and PDU mode ● Point to point MO and MT ● SMS cell broadcast ● SMS storage: ME by default
(U)SIM Interface	Support 1.8 V USIM/SIM card only
UART Interfaces	● Baud rate can reach up to 230400 bps, 115200 bps by default ● Used for AT command communication and data transmission
Audio Feature	Support one digital audio interface: PCM interface for VoLTE and GSM CS voice only
USB Interface [1)]	● Compliant with USB 2.0 specification (slave only) ● Used for AT command communication, data transmission, GNSS NMEA output, software debugging and firmware upgrade ● Support USB serial drivers for Windows 7/8/8.1/10, Linux 2.6–5.4, Android 4.x–9.x
Antenna Connectors	● Main antenna connector ● GNSS antenna connector
GNSS Features	● Gen9 VT of Qualcomm ● Protocol: NMEA 0183 ● Data update rate: 1 Hz by default
AT Commands	● 3GPP TS 27.007, 27.005 compliant AT commands ● Quectel enhanced AT commands
Physical Characteristics	● Size: (51.0 ±0.15) mm × (30.0 ±0.15) mm × (4.9 ±0.2) mm ● Weight: 7.2 g
Temperature Range	● Operating temperature range: -35°C to +75°C [2)] ● Extended temperature range: -40°C to +80°C [3)] ● Storage temperature range: -40°C to +90°C
Firmware Upgrade	● USB interface ● DFOTA*
RoHS	All hardware components are fully compliant with EU RoHS directive

NOTES

1. [1)] USB_VBUS has been connected to module's VBAT pin by default.
2. [2)] Within the operating temperature range, the module meets 3GPP specifications.
3. [3)] Within the extended temperature range, the module remains the ability to establish and maintain functions such as voice, SMS and data transmission, without any unrecoverable malfunction. Radio spectrum and radio network will not be influenced, while one or more specifications, such as P_{out}, may undergo a reduction in value, exceeding the specified tolerances of 3GPP. When the temperature returns to the normal operating temperature level, the module will meet 3GPP specifications again.

2.3. Functional Diagram

The following figure shows the block diagram of BG95-M3 Mini PCIe.

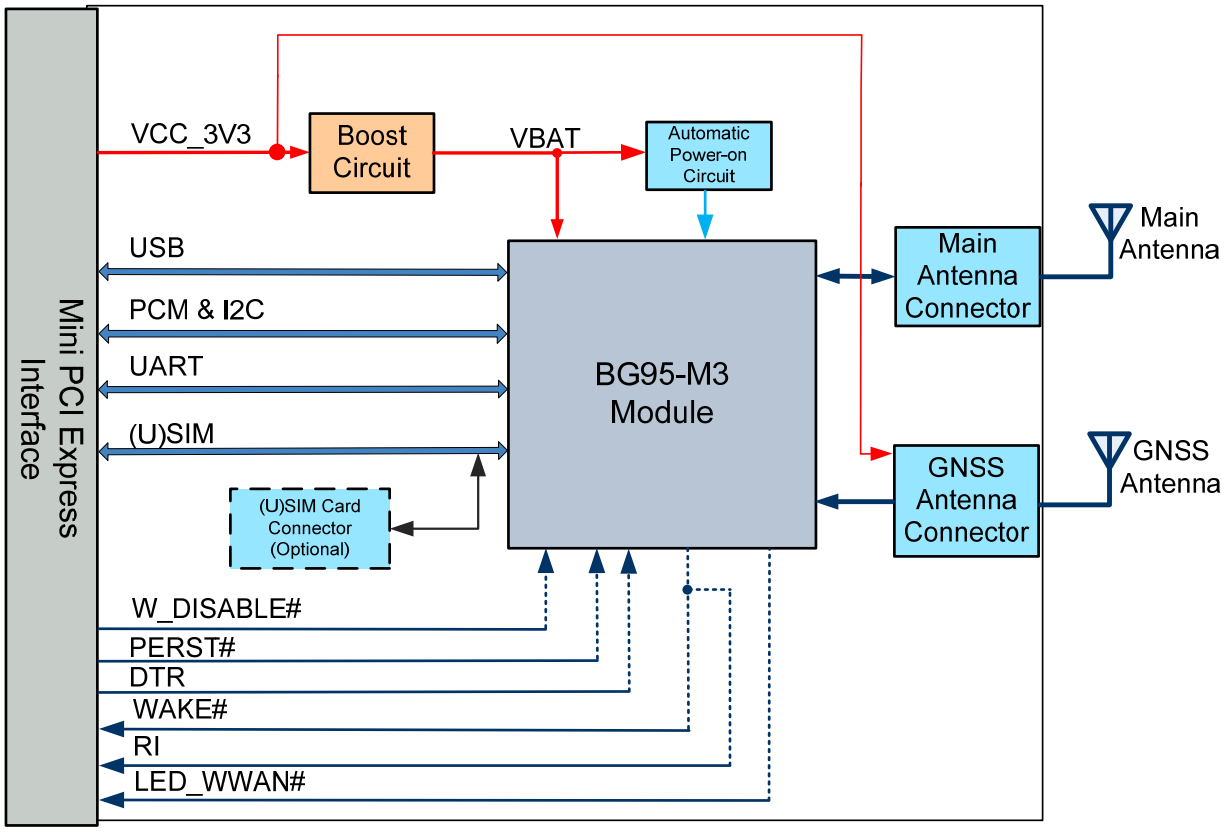

Figure 1: Functional Diagram

NOTE

The integrated (U)SIM card connector shares the same (U)SIM bus with the external (U)SIM card connector that is connected to Mini PCI Express (U)SIM interface. It does not support (U)SIM card detection function, and cannot be used simultaneously with the external (U)SIM card connector. When unused, it has no any effect to the external (U)SIM card connector.

3 Application Interfaces

The physical connections and signal levels of BG95-M3 Mini PCIe comply with PCI Express Mini CEM specifications. This chapter mainly describes the definition and application of the following interfaces of BG95-M3 Mini PCIe:

- Power supply
- (U)SIM interface
- USB interface
- UART interface
- PCM and I2C interfaces*
- Control and indicator interfaces

NOTE

"*" means under development.

3.1. Pin Assignment

The following figure shows the pin assignment of BG95-M3 Mini PCIe module. The top side contains BG95-M3 module and antenna connectors.

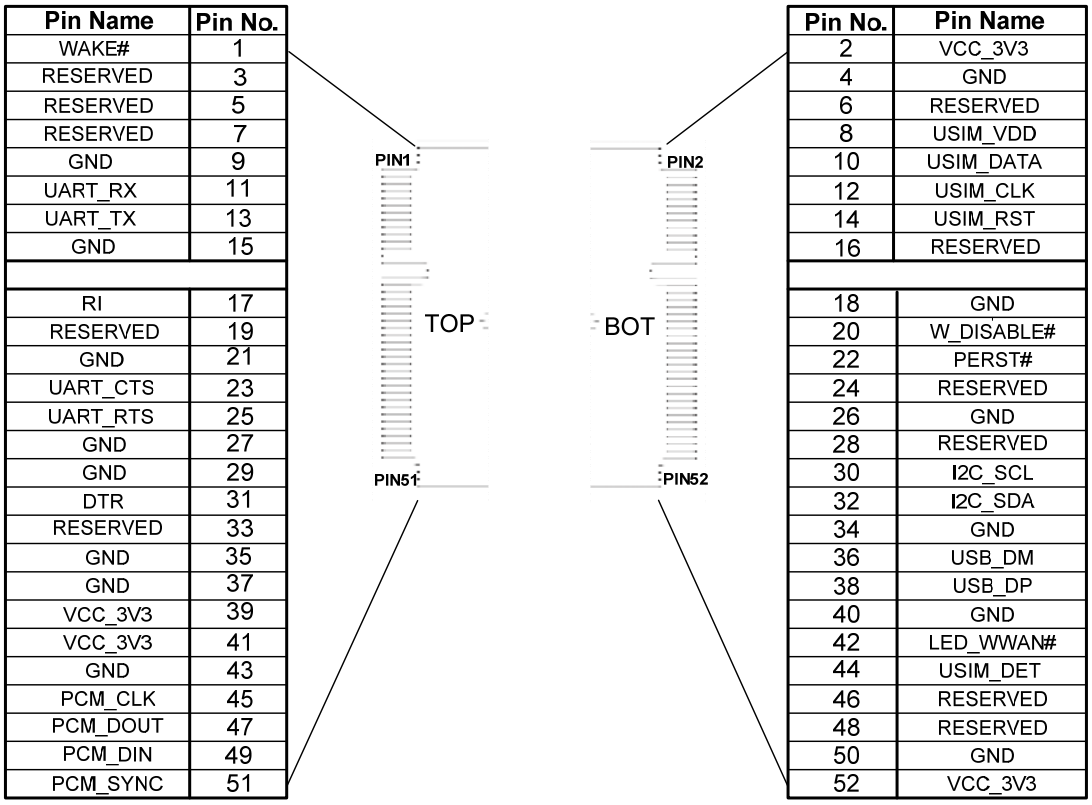

Figure 2: Pin Assignment

3.2. Pin Description

The following tables show the pin definition and description of BG95-M3 Mini PCIe.

Table 3: Definition of I/O Parameters

Type	Description
DI	Digital Input
DO	Digital Output
IO	Bidirectional
OC	Open Collector
OD	Open Drain
PI	Power Input
PO	Power Output

Table 4: Pin Description

Pin No.	Mini PCI Express Standard Name	BG95-M3 Mini PCIe Pin Name	I/O	Description	Comment
1	WAKE#	WAKE#	OC	Used to wake up the host	Active low
2	3.3 Vaux	VCC_3V3	PI	3.0–3.6 V DC power supply, typically 3.3 V	
3	COEX1	RESERVED		Reserved	
4	GND	GND		Mini card ground	
5	COEX2	RESERVED		Reserved	
6	1.5V	RESERVED		Reserved	
7	CLKREQ#	RESERVED		Reserved	
8	UIM_PWR	USIM_VDD	PO	(U)SIM card power supply	1.8 V only
9	GND	GND		Mini card ground	
10	UIM_DATA	USIM_DATA	IO	(U)SIM card data	1.8 V only
11	REFCLK-	UART_RX	DI	UART receive data	Connect to DTE's TX.
12	UIM_CLK	USIM_CLK	DO	(U)SIM card clock	1.8 V only
13	REFCLK+	UART_TX	DO	UART transmit data	Connect to DTE's RX.
14	UIM_RESET	USIM_RST	DO	(U)SIM card reset	1.8 V only
15	GND	GND		Mini card ground	
16	UIM_VPP	RESERVED		Reserved	
17	RESERVED	RI	DO	Used to wake up the host	Active low
18	GND	GND		Mini card ground	
19	RESERVED	RESERVED		Reserved	
20	W_DISABLE#	W_DISABLE#	DI	Airplane mode control	Pulled up by default. Active low.
21	GND	GND		Mini card ground	
22	PERST#	PERST#	DI	Fundamental reset signal	Pulled up by default. Active low.

23	PERn0	UART_CTS	DI	UART clear to send	Connect to DTE's RTS.
24	3.3 Vaux	RESERVED		Reserved	
25	PERp0	UART_RTS	DO	UART request to send	Connect to DTE's CTS
26	GND	GND		Mini card ground	
27	GND	GND		Mini card ground	
28	1.5V	RESERVED		Reserved	
29	GND	GND		Mini card ground	
30	SMB_CLK	I2C_SCL [1)]	OD	I2C serial clock	Require external pull-up to 1.8 V. For VoLTE and GSM CS voice only.
31	PETn0	DTR	DI	Data terminal ready	
32	SMB_DATA	I2C_SDA [1)]	OD	I2C serial data	Require external pull-up to 1.8 V. For VoLTE and GSM CS voice only.
33	PETp0	RESERVED		Reserved	
34	GND	GND		Mini card ground	
35	GND	GND		Mini card ground	
36	USB_D-	USB_DM	IO	USB differential data (-)	
37	GND	GND		Mini card ground	
38	USB_D+	USB_DP	IO	USB differential data (+)	
39	3.3 Vaux	VCC_3V3	PI	3.0–3.6 V DC power supply, typically 3.3 V	
40	GND	GND		Mini card ground	
41	3.3 Vaux	VCC_3V3	PI	3.0–3.6 V DC power supply, typically 3.3 V	
42	LED_WWAN#	LED_WWAN#	OC	LED signal for indicating the network status of the module	Active low
43	GND	GND		Mini card ground	

44	LED_WLAN#	USIM_DET	DI	(U)SIM card insertion detection	
45	RESERVED	PCM_CLK [1)]	DO	PCM clock signal	1.8 V power domain. For VoLTE and GSM CS voice only.
46	LED_WPAN#	RESERVED		Reserved	
47	RESERVED	PCM_DOUT [1)]	DO	PCM data output	1.8 V power domain. For VoLTE and GSM CS voice only.
48	1.5V	RESERVED		Reserved	
49	RESERVED	PCM_DIN [1)]	DI	PCM data input	1.8 V power domain. For VoLTE and GSM CS voice only.
50	GND	GND		Mini card ground	
51	RESERVED	PCM_SYNC [1)]	DO	PCM frame synchronization	1.8 V power domain. For VoLTE and GSM CS voice only.
52	3.3 Vaux	VCC_3V3	PI	3.3 V DC supply	

NOTES

1. [1)] PCM and I2C interfaces support VoLTE and GSM CS voice only.
2. The module can be reset by driving PERST# low for 2–3.8 s.
3. Keep all reserved and unused pins unconnected.

3.1. Operating Modes

The following table briefly outlines the operating modes to be mentioned in the following chapters.

Table 5: Overview of Operating Modes

Mode	Details	
Normal Operation	Idle	Software is active. The module has registered on the network, and it is ready to send and receive data.
	Talk/Data	Network connection is ongoing. In this mode, the power consumption is decided by network setting and data transfer rate.
Minimum Functionality Mode	**AT+CFUN=0** command can set the module to a minimum functionality mode without removing the power supply. In this case, both RF function and (U)SIM card will be invalid.	
Airplane Mode	**AT+CFUN=4** command or W_DISABLE# pin can set the module to airplane mode. In this case, RF function will be invalid.	

3.2. Power Supply

The following table shows the definition of VCC_3V3 pins and ground pins.

Table 6: Definition of VCC_3V3 and GND Pins

Pin Name	Pin No.	I/O	Power Domain	Description
VCC_3V3	2, 39, 41, 52	PI	3.0–3.6 V	Typically 3.3 V DC supply
GND	4, 9, 15, 18, 21, 26, 27, 29, 34, 35, 37, 40, 43, 50			Mini card ground

The typical supply voltage of BG95-M3 Mini PCIe is 3.3 V. In 2G network, the input peak current may reach 2.7 A during the transmitting time. Therefore, the power supply must be able to provide a rated current of 2.7 A at least, and a low-ESR bypass capacitor no less than 470 μF should be used to prevent the voltage from dropping. If the switching power supply is used to supply power to the module, the power device and power supply routing traces of the switching power supply should avoid the antennas as much as possible to prevent EMI interference.

The following figure shows a reference design of power supply where R2 and R3 are 1% tolerance resistors, and C3 is a low-ESR capacitor.

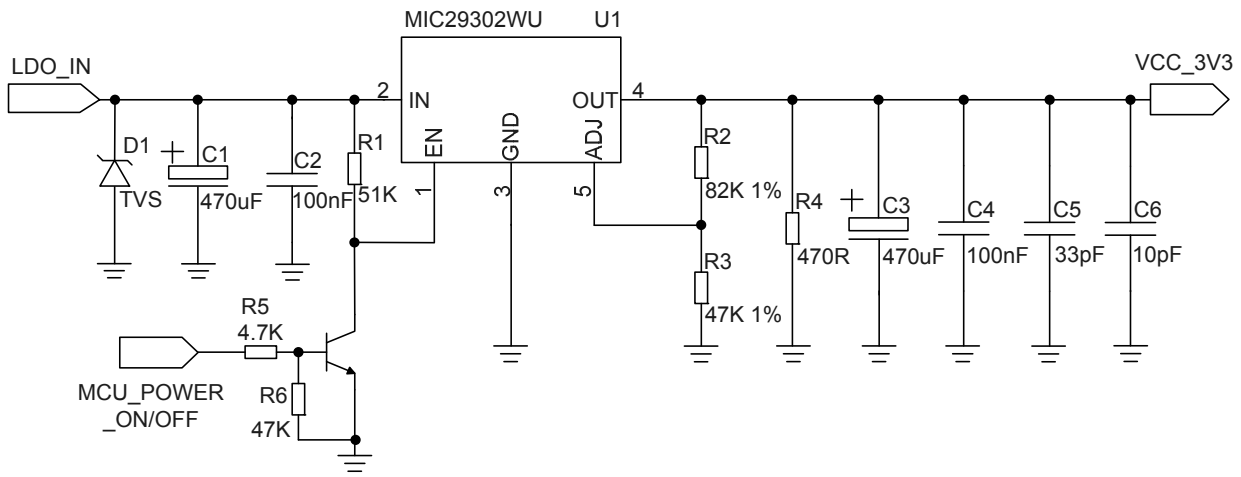

Figure 3: Reference Design of Power Supply

3.3. (U)SIM Interface

The (U)SIM interface circuitry meets ETSI and IMT-2000 requirements. Only 1.8 V (U)SIM card is supported. The following table shows the pin definition of (U)SIM interface.

Table 7: Pin Definition of (U)SIM Interface

Pin Name	Pin No.	I/O	Power Domain	Description
USIM_VDD	8	PO	1.8 V	(U)SIM card power supply
USIM_DATA	10	IO	1.8 V	(U)SIM card data
USIM_CLK	12	DO	1.8 V	(U)SIM card clock
USIM_RST	14	DO	1.8 V	(U)SIM card reset
USIM_DET	44	DI	1.8 V	(U)SIM card insertion detection

BG95-M3 Mini PCIe supports (U)SIM card hot-plug via USIM_DET, and both high and low level detection are supported. The function is disabled by default. See **AT+QSIMDET** in ***document [2]*** for details.

The following figure shows a reference design of (U)SIM interface with an 8-pin (U)SIM card connector.

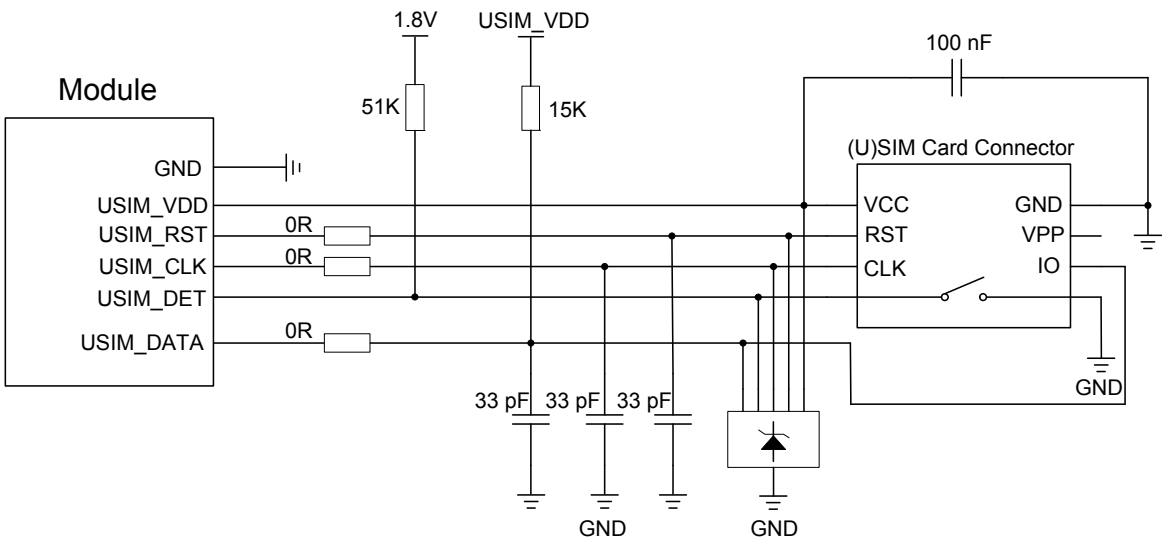

Figure 4: Reference Design of (U)SIM Interface with 8-Pin (U)SIM Card Connector

If (U)SIM card detection function is not needed, please keep USIM_DET unconnected. A reference design of (U)SIM interface with a 6-pin (U)SIM card connector is illustrated in the following figure.

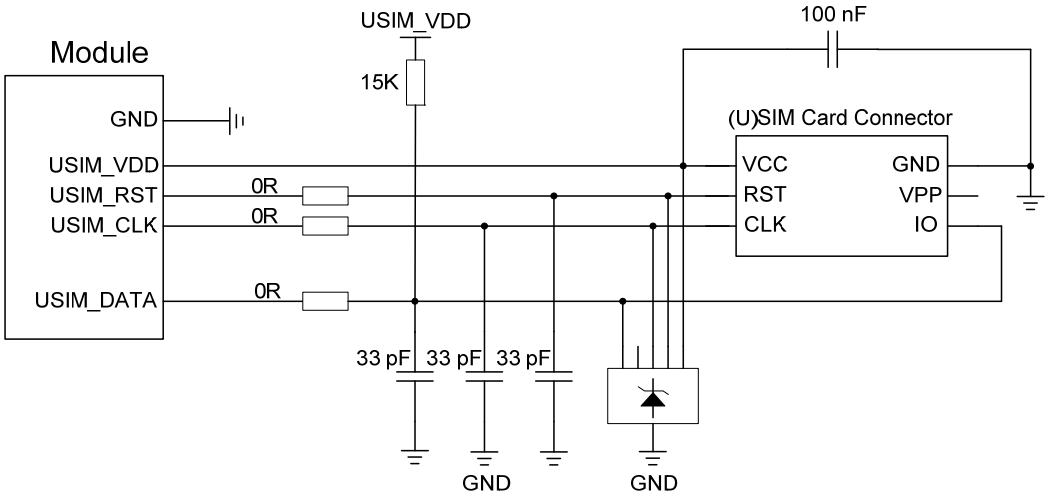

Figure 5: Reference Design of (U)SIM Interface with 6-Pin (U)SIM Card Connector

In order to enhance the reliability and availability of the (U)SIM card in customers' applications, please follow the criteria below in (U)SIM circuit design:

- Keep the placement of (U)SIM card connector to the module as close as possible. Keep the trace length as less than 200 mm as possible.
- Keep (U)SIM card signals away from RF and power supply traces.
- Assure the ground between the module and the (U)SIM card connector short and wide. Keep the trace width of ground no less than 0.5 mm to maintain the same electric potential. The decouple

capacitor between USIM_VDD and GND should be not more than 1 μF and be placed close to the (U)SIM card connector.

- To avoid cross-talk between USIM_DATA and USIM_CLK, keep them away from each other and shield them with surrounded ground.
- In order to offer good ESD protection, it is recommended to add a TVS diode with parasitic capacitance not exceeding 15 pF. The 0 Ω resistors should be added in series between the module and the (U)SIM card connector so as to facilitate debugging. The 33 pF capacitors are used for filtering interference of EGSM900. Please note that the (U)SIM peripheral circuit should be close to the (U)SIM card connector.
- The pull-up resistor on USIM_DATA line can improve anti-jamming capability when long layout trace and sensitive occasion are applied, and should be placed close to the (U)SIM card connector.

3.4. USB Interface

The module provides one integrated Universal Serial Bus (USB) interface which complies with the USB 2.0 specification and supports operation at low-speed (1.5 Mbps) and full-speed (12 Mbps) modes. The USB interface is used for AT command communication, data transmission, GNSS NMEA output, software debugging, and firmware upgrade.

The following table shows the pin definition of USB interface.

Table: Pin Definition of USB Interface

Pin Name	Pin No.	I/O	Description	Comment
USB_DM	36	IO	USB differential data (-)	Require differential impedance of 90 Ω
USB_DP	38	IO	USB differential data (+)	Require differential impedance of 90 Ω

The following figure shows a reference design of USB interface.

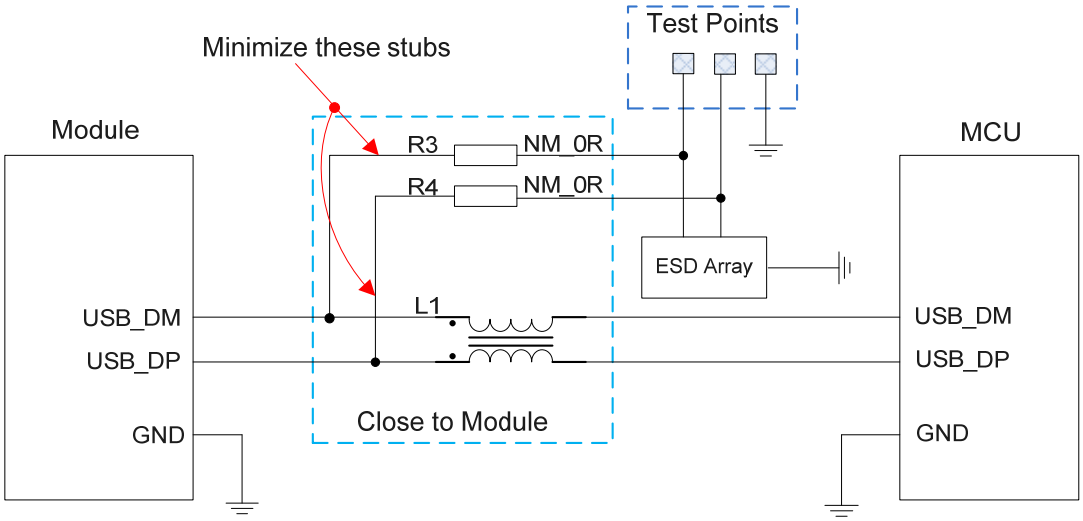

Figure 6: Reference Design of USB Interface

A common mode choke L1 is recommended to be added in series between the module and the MCU in order to suppress EMI spurious transmission. Meanwhile, the 0 Ω resistors (R3 and R4) should be added in series between the module and the test points so as to facilitate debugging, and the resistors are not mounted by default. In order to ensure the integrity of USB data line signal, L1/R3/R4 must be placed close to the module, and also the resistors should be placed close to each other. The extra stubs of trace must be as short as possible.

The following principles should be complied with when design the USB interface, so as to meet USB 2.0 specification.

- It is important to route the USB signal traces as differential pairs with ground surrounded. The impedance of USB differential trace is 90 Ω.
- Do not route signal traces under crystals, oscillators, magnetic devices and RF signal traces. It is important to route the USB differential traces in inner-layer of the PCB, and surround the traces with ground on that layer and with ground planes above and below.
- Junction capacitance of the ESD protection device might cause influences on USB data lines, so please pay attention to the selection of the device. Typically, the stray capacitance should be less than 2 pF.
- Keep the ESD protection devices as close to the USB connector as possible.

NOTE

BG95-M3 Mini PCIe can only be used as a slave device.

3.5. UART Interface

The UART interface supports 9600, 19200, 38400, 57600, 115200 and 230400 bps baud rates. The default baud rate is 115200 bps. This interface can be used for AT command communication and data transmission.

The following table shows the pin definition of the UART interface.

Table 8: Pin Definition of UART Interface

Pin Name	Pin No.	I/O	Power Domain	Description
UART_RX	11	DI	3.3 V	UART receive data
UART_TX	13	DO	3.3 V	UART transmit data
UART_CTS	23	DI	3.3 V	UART clear to send
UART_RTS	25	DO	3.3 V	UART request to send

The power domain of UART interface is 3.3 V. Pay attention to the signal direction while connecting the UART interface to a peripheral MCU/RAM. A reference design of UART interface is provided below:

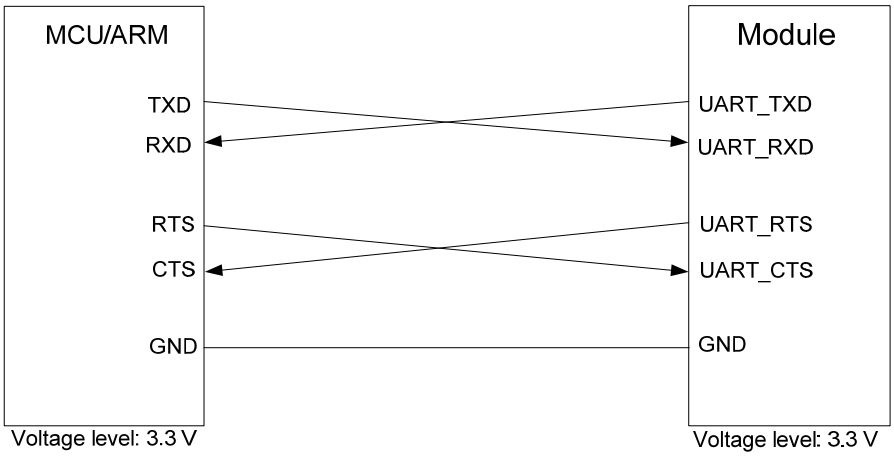

Figure 7: Reference Design of UART Interface

NOTE

AT+IPR can be used to set the baud rate of UART interface, and **AT+IFC** can be used to set the hardware flow control (hardware flow control is disabled by default). See ***document [2]*** for details.

3.6. PCM and I2C Interfaces*

BG95-M3 Mini PCIe provides one Pulse Code Modulation (PCM) digital interface and one I2C interface for VoLTE and GSM CS voice.

The following table shows the pin definition of PCM and I2C interfaces that can be applied in audio codec design.

Table 9: Pin Definition of PCM and I2C Interfaces

Pin Name	Pin No.	I/O	Power Domain	Description
PCM_CLK	45	DO	1.8 V	PCM clock signal
PCM_DOUT	47	DO	1.8 V	PCM data output
PCM_DIN	49	DI	1.8 V	PCM data input
PCM_SYNC	51	DO	1.8 V	PCM frame synchronization
I2C_SCL	30	OD	1.8 V	I2C serial clock. Require external pull-up to 1.8 V.
I2C_SDA	32	OD	1.8 V	I2C serial data. Require external pull-up to 1.8 V.

The following figure shows a reference design of PCM and I2C interfaces with an external codec IC.

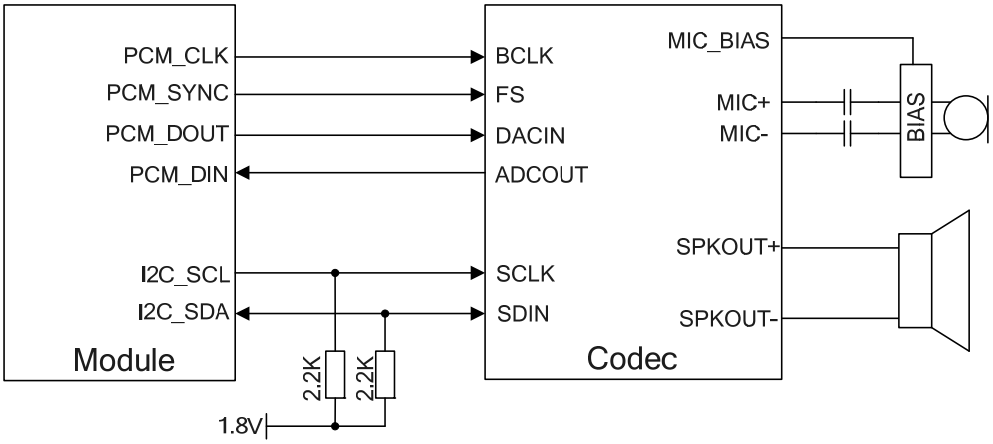

Figure 8: Reference Design of PCM and I2C Application with Audio Codec

NOTE

PCM and I2C interfaces support VoLTE and GSM CS voice only.

3.7. Control and Indication Interfaces

The following table shows the pin definition of control and indication interfaces.

Table 10: Pin Definition of Control and Indication Interfaces

Pin Name	Pin No.	I/O	Power Domain	Description
RI	17	DO	3.3 V	Used to wake up the host.
DTR	31	DI	3.3 V	Data terminal ready.
W_DISABLE#	20	DI	3.3 V	Airplane mode control. Pulled up by default. Active low.
PERST#	22	DI	3.3 V	Fundamental reset signal. Pulled up by default. Active low.
LED_WWAN#	42	OC		LED signal for indicating the network status of the module. Active low.
WAKE#	1	OC		Used to wake up the host.

NOTE

The module can be reset by driving PERST# low for 2–3.8 s.

3.7.1. RI

RI is used to wake up the host. When a URC returns, there will be the following behaviors on the RI pin after executing **AT+QCFG="risignaltype","physical"**.

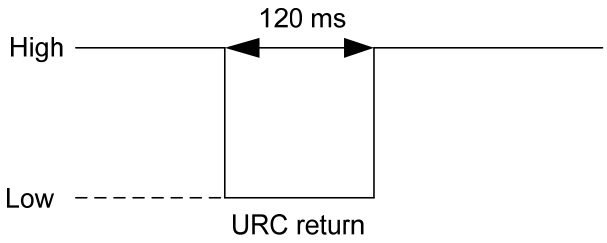

Figure 9: RI Behavior

3.7.2. W_DISABLE#

W_DISABLE# enables/disables the RF function (excluding GNSS). It is pulled up by default, and driving it low makes the module enter airplane mode.

The pin function is disabled by default, and **AT+QCFG="airplanecontrol",1** can be used to enable this function.

Table 11: Airplane Mode Control (Hardware Method)

W_DISABLE#	RF Function Status	Module Operation Mode
High level (default)	RF enabled	Normal mode
Low level	RF disabled	Airplane mode

The RF function can also be enabled/disabled with **AT+CFUN=<fun>**, and the details are listed below.

Table 12: Airplane Mode Control (Software Method)

AT+CFUN=<fun>	RF Function Status	Module Operation Mode
<fun>=0	RF and (U)SIM disabled	Minimum functionality mode
<fun>=1	RF enabled	Full functionality (normal mode)
<fun>=4	RF disabled	Airplane mode

3.7.3. PERST#

PERST# forces a hardware reset on the module. The module can be reset by driving PERST# low for 2–3.8 s and then releasing it. The reset timing is illustrated in the following figure.

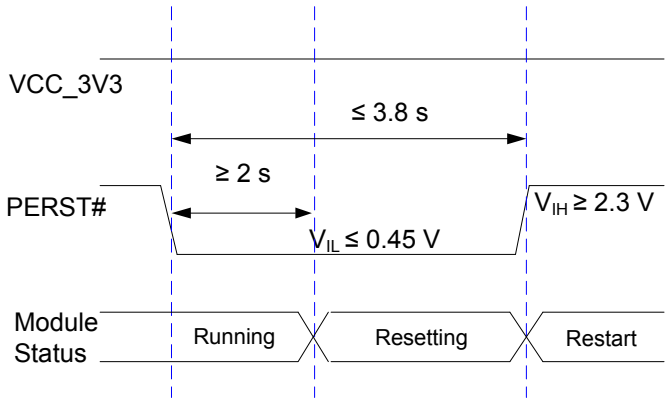

Figure 10: Reset Timing

3.7.4. LED_WWAN#

LED_WWAN# indicates the network status of the module, and it absorbs a current up to 40 mA. According to the following circuit, in order to reduce the current of the LED, a resistor must be placed in series with the LED. The LED is powered on when LED_WWAN# is pulled low.

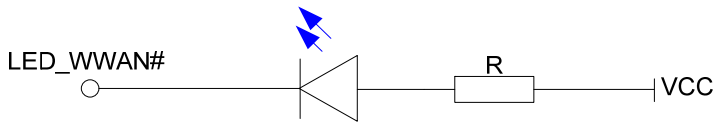

Figure 11: Reference Design of LED_WWAN#

LED_WWAN# supports two indication modes which can be switched through **AT+QCFG="ledmode"**:

- **AT+QCFG="ledmode",0** (Default setting)
- **AT+QCFG="ledmode",1**

The following tables show the detailed network status indications of LED_WWAN#.

Table 13: Indications of Network Status (AT+QCFG="ledmode",0, Default Setting)

Pin Status	Description
Flicker slowly (200 ms low/1800 ms high)	Network searching
Flicker slowly (1800 ms low/200 ms high)	Idle
Flicker quickly (125 ms low/125 ms high)	Data transfer is ongoing

Always low	Voice calling

Table 14: Indications of Network Status (AT+QCFG="ledmode",1)

Pin Status	Description
Low Level (Light on)	Registered on network successfully
High-impedance (Light off)	● No network coverage or not registered ● W_DISABLE# is at low level (airplane mode) ● **AT+CFUN=0** or **AT+CFUN=4**

3.7.5. WAKE#

WAKE# is an open collector signal which is similar to RI, but a host pull-up resistor and **AT+QCFG="risignaltype","physical"** command are required. When a URC returns, a 120 ms low level pulse will be outputted. The state of WAKE# is shown as below.

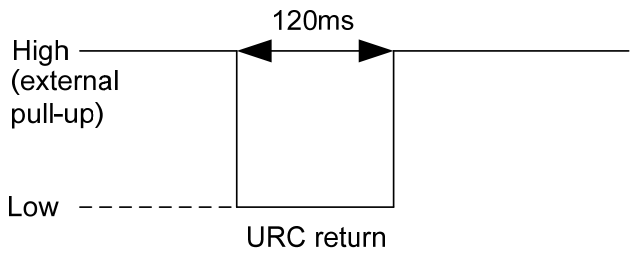

Figure 12: WAKE# Behaviors

4 GNSS Receiver

4.1. General Description

BG95-M3 Mini PCIe includes a fully integrated global navigation satellite system solution that supports Gen9 VT of Qualcomm (GPS, GLONASS, BeiDou, Galileo and QZSS).

The module supports standard NMEA 0183 protocol, and outputs NMEA sentences at 1 Hz data update rate via USB interface by default.

By default, the GNSS engine is switched off. It has to be switched on via AT command. See ***document [3]*** for more details about GNSS engine technology and configurations.

4.2. GNSS Performance

The following table shows the GNSS performance of BG95 Mini PCIe.

Table 15: GNSS Performance

Parameter	Description	Conditions	Typ.	Unit
Sensitivity (GNSS)	Cold start	Autonomous	-146	dBm
	Reacquisition	Autonomous	-157	dBm
	Tracking	Autonomous	-157	dBm
TTFF (GNSS)	Cold start @open sky	Autonomous	TBD	s
		XTRA enabled	TBD	s
	Warm start @open sky	Autonomous	TBD	s
		XTRA enabled	TBD	s
	Hot start	Autonomous	TBD	s

	@open sky	XTRA enabled	TBD	s
Accuracy (GNSS)	CEP-50	Autonomous @open sky	< 3	m

NOTES

1. Tracking sensitivity: the minimum GNSS signal power at which the module can maintain lock (keep positioning for at least 3 minutes continuously).
2. Reacquisition sensitivity: the minimum GNSS signal power required for the module to maintain lock within 3 minutes after loss of lock.
3. Cold start sensitivity: the minimum GNSS signal power at which the module can fix position successfully within 3 minutes after executing cold start command.

5 Antenna Connection

BG95-M3 Mini PCIe is mounted with two antenna connectors for external antenna connection: a main antenna connector and a GNSS antenna connector. The impedance of the antenna connectors is 50 Ω.

Figure 13: Main and GNSS Antenna Connectors

5.1. Main Antenna Connector

5.1.1. Description of Main Antenna Connector

The details of main antenna connector are shown below.

Table 16: Description of Main Antenna Connector

Connector	I/O	Description	Comment
MAIN	IO	Main antenna connector	50 Ω impedance

5.1.2. Operating Frequency

Table 17: Operating Frequency

3GPP Band	Transmit	Receive	Unit
LTE-FDD B1	1920–1980	2110–2170	MHz
LTE-FDD B2, PCS1900	1850–1910	1930–1990	MHz
LTE-FDD B3, DCS1800	1710–1785	1805–1880	MHz
LTE-FDD B4	1710–1755	2110–2155	MHz
LTE-FDD B5, GSM850	824–849	869–894	MHz
LTE-FDD B8, EGSM900	880–915	925–960	MHz
LTE-FDD B12	699–716	729–746	MHz
LTE-FDD B13	777–787	746–756	MHz
LTE-FDD B18	815–830	860–875	MHz
LTE-FDD B19	830–845	875–890	MHz
LTE-FDD B20	832–862	791–821	MHz
LTE-FDD B25	1850–1915	1930–1995	MHz
LTE-FDD B26 [1)]	814–849	859–894	MHz
LTE-FDD B27 [1)]	807–824	852–869	MHz
LTE-FDD B28	703–748	758–803	MHz
LTE-FDD B66	1710–1780	2110–2180	MHz
LTE-FDD B71 [2)]	663–698	617–652	MHz
LTE-FDD B85	698–716	728–746	MHz

NOTES

1. [1)] LTE-FDD B26 and B27 are supported by Cat M1 only.
2. [2)] LTE-FDD B71 is supported by Cat NB2 only.

5.2. GNSS Antenna Connector

5.2.1. Description of GNSS Antenna Connector

The following tables show details of GNSS antenna connector.

By default, the GNSS antenna connector supports active antennas with 3.3 V power supply design. It also supports passive antennas.

Table 18: Description of GNSS Antenna Connector

Connector	I/O	Description	Comment
GNSS	AI	GNSS antenna connector	50 Ω impedance

5.2.2. GNSS Frequency

Table 19: GNSS Frequency

Type	Frequency	Unit
GPS	1575.42 ±1.023	MHz
GLONASS	1597.5–1605.8	MHz
Galileo	1575.42 ±2.046	MHz
BeiDou	1561.098 ±2.046	MHz
QZSS	1575.42 ±1.023	MHz

5.3. Antenna Requirements

The following table shows the requirements on main and GNSS antennas.

Table 20: Antenna Requirements

Type	Requirements
GNSS	Frequency range: 1559–1609 MHz Polarization: RHCP or linear VSWR: < 2 (Typ.) Passive antenna gain: > 0 dBi Active antenna noise figure: < 1.5 dB Active antenna gain: > 0 dBi Active antenna embedded LNA gain: < 17 dB Active antenna power supply: 3.3 V
LTE/GSM	VSWR: ≤ 2 Efficiency: > 30% Max Input Power: 50 W Input Impedance: 50 Ω Cable Insertion Loss: < 1 dB (LTE B5/B8/B12/B13/B18/B19/B20/B26/B27/B28/B71/B85, GSM850/EGSM900) Cable Insertion Loss: < 1.5 dB (LTE B1/B2/B3/B4/B25/B66, DCS1800/PCS1900)

5.4. Recommended Mating Plugs for Antenna Connection

BG95-M3 Mini PCIe is mounted with antenna connectors (receptacles) for convenient antenna connection. The dimensions of receptacles are shown as below.

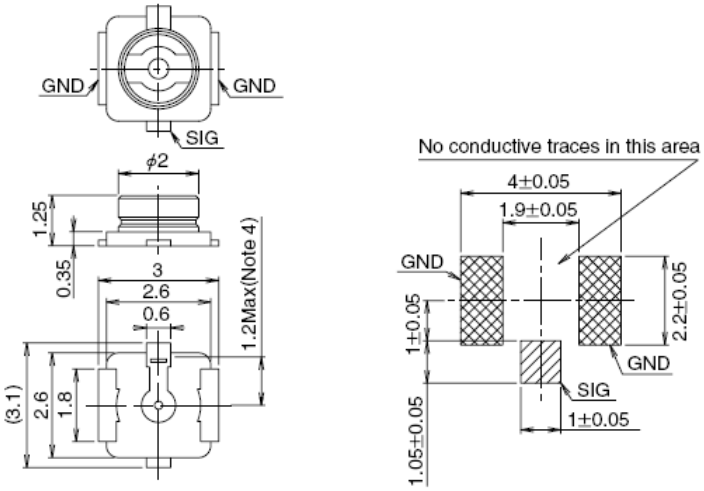

Figure 14: Dimensions of Receptacles (Unit: mm)

U.FL-LP mating plugs listed in the following figure can be used to match the receptacles.

	U.FL-LP-040	U.FL-LP-066	U.FL-LP(V)-040	U.FL-LP-062	U.FL-LP-088
Part No.	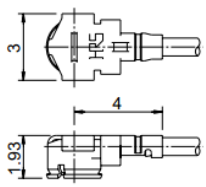	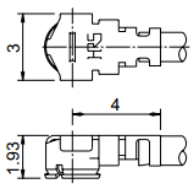	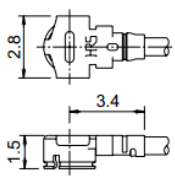	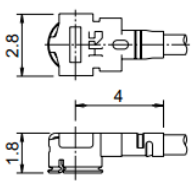	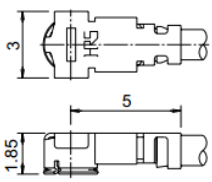
Mated Height	2.5mm Max. (2.4mm Nom.)	2.5mm Max. (2.4mm Nom.)	2.0mm Max. (1.9mm Nom.)	2.4mm Max. (2.3mm Nom.)	2.4mm Max. (2.3mm Nom.)
Applicable cable	Dia. 0.81mm Coaxial cable	Dia. 1.13mm and Dia. 1.32mm Coaxial cable	Dia. 0.81mm Coaxial cable	Dia. 1mm Coaxial cable	Dia. 1.37mm Coaxial cable
Weight (mg)	53.7	59.1	34.8	45.5	71.7
RoHS	YES				

Figure 15: Mechanicals of U.FL-LP Mating Plugs

The following figure describes the space factor of mated connectors.

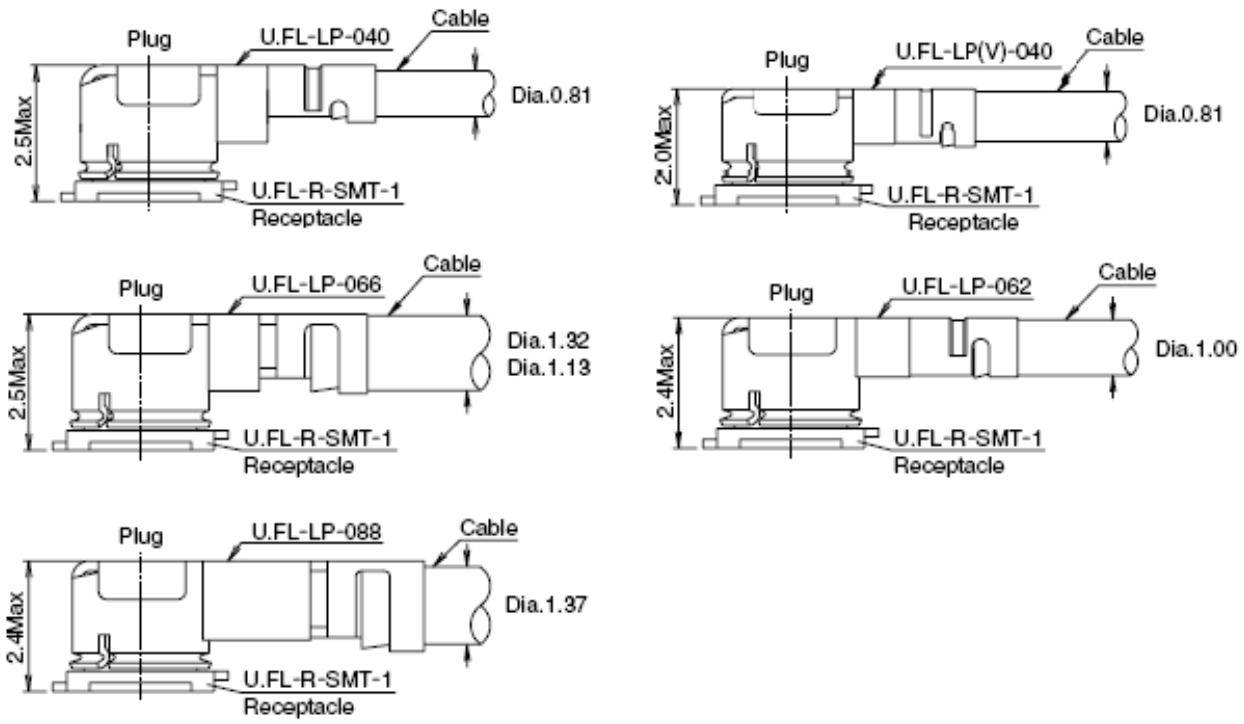

Figure 16: Space Factor of Mated Connectors (Unit: mm)

For more details of the recommended mating plugs, please visit http://www.hirose.com.

6 Electrical, Reliability and Radio Characteristics

6.1. General Description

This chapter mainly describes the following electrical and radio characteristics of BG95-M3 Mini PCIe:

- Power supply requirements
- Digital I/O characteristics
- RF characteristics
- ESD characteristics
- Current consumption

6.2. Power Supply Requirements

The input voltage of BG95-M3 Mini PCIe is 3.3 V ±9% (3.0–3.6 V), as specified by *PCI Express Mini CEM Specifications 1.2*. The following table shows the power supply requirements of the module.

Table 21: Power Supply Requirements

Parameter	Description	Min.	Typ.	Max.	Unit
VCC_3V3	Power Supply	3.0	3.3	3.6	V

6.3. Digital I/O Characteristics

The following table shows the digital I/O characteristics of the module.

Table 22: 3.3 V Digital I/O Characteristics

Parameter	Description	Min.	Max.	Unit
V_{IH}	Input High Voltage	0.7 × VCC_3V3	VCC_3V3 + 0.3	V
V_{IL}	Input Low Voltage	-0.3	0.3 × VCC_3V3	V
V_{OH}	Output High Voltage	VCC_3V3 - 0.5	VCC_3V3	V
V_{OL}	Output Low Voltage	0	0.4	V

Table 23: 1.8 V Digital I/O Characteristics

Parameter	Description	Min.	Max.	Unit
V_{IH}	Input High Voltage	1.2	2.0	V
V_{IL}	Input Low Voltage	-0.3	0.6	V
V_{OH}	Output High Voltage	1.35	1.8	V
V_{OL}	Output Low Voltage	0	0.45	V

NOTES

1. The PCM and I2C interfaces belong to 1.8 V power domain and other I/O interfaces belong to VCC_3V3 power domain.
2. The maximum voltage value of V_{IL} for PERST# and W_DISABLE# is 0.5 V.

6.4. RF Characteristics

The following tables show the conducted RF output power and receiving sensitivity of the module.

Table 24: Conducted RF Output Power

Frequency	Max.	Min.
LTE-FDD B1/B2/B3/B4/B5/B8/B12/B13/B18/B19/B20/ B25/B26 [1)]/B27 [1)]/B28/B66/B71 [2)]/B85	21 dBm + 1.7/-3 dB	< -39 dBm
GSM850/EGSM900	33 dBm ± 2 dB	5 dBm ± 5 dB

DCS1800/PCS1900	30 dBm ± 2 dB	0 dBm ± 5 dB
GSM850/EGSM900 (8-PSK)	27 dBm ± 3 dB	5 dBm ± 5 dB
DCS1800/PCS1900 (8-PSK)	26 dBm ± 3 dB	0 dBm ± 5 dB

NOTES

1. [1)] LTE-FDD B26 and B27 are supported by Cat M1 only.
2. [2)] LTE-FDD B71 is supported by Cat NB2 only.

Table19: Conducted RF Receiving Sensitivity

Band	Primary	Diversity	Sensitivity (dBm)	
			Cat M1/3GPP	Cat NB2 [1)]/3GPP
LTE-FDD B1	Supported	Not Supported	-106/-102.3	-115/-107.5
LTE-FDD B2			-104.9/-100.3	-115/-107.5
LTE-FDD B3			-102.9/-99.3	-115/-107.5
LTE-FDD B4			-104.4/-102.3	-114/-107.5
LTE-FDD B5			-104.4/-100.8	-116/-107.5
LTE-FDD B8			-104.1/-99.8	-113/-107.5
LTE-FDD B12			-104.4/-99.3	-116/-107.5
LTE-FDD B13			-104.4/-99.3	-115.5/-107.5
LTE-FDD B18			-104.4/-102.3	-116/-107.5
LTE-FDD B19			-104.4/-102.3	-115.5/-107.5
LTE-FDD B20			-104.1/-99.8	-115.5/-107.5
LTE-FDD B25			-104.5/-100.3	-115.5/-107.5
LTE-FDD B26			-104.5/-100.3	Not Supported
LTE-FDD B27			-104.5/-100.8	Not Supported
LTE-FDD B28			-104 /-100.8	-116/-107.5
LTE-FDD B66			-103.9/-101.8	-115.5/-107.5

LTE-FDD B71			Not Supported	-115/-107.5
LTE-FDD B85			-104.3/-99.3	-116/-107.5
Band	**Primary**	**Diversity**	**Sensitivity (dBm)**	
			GSM/3GPP	
GSM850/EGSM900	Supported	Not Supported	-107/-102	
DCS1800/PCS1900			-107/-102	

NOTE

[1] LTE Cat NB2 receiving sensitivity without repetitions.

6.5. ESD Characteristics

The following table shows the ESD characteristics of the module.

Table 20: ESD Characteristics

Tested Interfaces	Contact Discharge	Air Discharge	Unit
GND	TBD	TBD	kV
VCC_3V3	TBD	TBD	kV
Main antenna connector	TBD	TBD	kV
GNSS antenna connector	TBD	TBD	kV

6.6. Current Consumption

The following tables describe the current consumption of the module.

Table 21: Current Consumption of BG95-M3 Mini PCIe

Description	Conditions	Average	Max.	Unit
Idle Mode (USB connected)	LTE Cat M1 DRX = 1.28 s	28	-	mA
	LTE Cat NB1 DRX = 1.28 s	28	-	mA
	LTE Cat M1 eDRX = 40.96 s @ PTW = 10.24 s, DRX = 2.56 s	27	-	mA
	LTE Cat NB1 eDRX = 40.96 s @ PTW = 10.24 s, DRX = 2.56 s	27	-	mA
LTE Cat M1 data transfer (GNSS OFF)	Band 1 @ 21.35 dBm	250	538	mA
	Band 2 @ 21.53 dBm	240	514	mA
	Band 3 @ 21.18 dBm	242	514	mA
	Band 4 @ 21.48 dBm	260	618	mA
	Band 5 @ 21.38 dBm	260	578	mA
	Band 8 @ 22.46 dBm	259	597	mA
	Band 12 @ 21.45 dBm	235	495	mA
	Band 13 @ 21.46 dBm	254	557	mA
	Band 18 @ 22.29 dBm	254	567	mA
	Band 19 @ 21.39 dBm	244	526	mA
	Band 20 @ 22.27 dBm	259	571	mA
	Band 25 @ 21.46 dBm	256	574	mA
	Band 26 @ 22.16 dBm	256	551	mA
	Band 27 @ 21.8 dBm	250	545	mA
	Band 28A @ 21.3 dBm	253	558	mA
	Band 28B @ 21.2 dBm	244	515	mA
	Band 66 @ 22.82 dBm	249	557	mA
	Band 85 @ 21.27 dBm	237	507	mA

LTE Cat NB1 data transfer (GNSS OFF)	Band 1 @ 21.14 dBm	204	484	mA
	Band 2 @ 21.11 dBm	371	496	mA
	Band 3 @ 21.65 dBm	206	493	mA
	Band 4 @ 21.51 dBm	203	481	mA
	Band 5 @ 21.33 dBm	400	533	mA
	Band 8 @ 21.13dBm	393	519	mA
	Band 12 @ 21.09 dBm	203	483	mA
	Band 13 @ 21.21 dBm	412	550	mA
	Band 18 @ 21.38 dBm	215	516	mA
	Band 19 @ 20.78 dBm	390	523	mA
	Band 20 @ 21.13 dBm	395	528	mA
	Band 25 @ 21.57 dBm	206	509	mA
	Band 28 @ 21.06dBm	378	496	mA
	Band 66 @ 21.62 dBm	370	498	mA
	Band 71 @ 20.78 dBm	148	441	mA
	Band 85 @ 20.07 dBm	357	463	mA
GPRS data transfer (GNSS OFF)	GPRS GSM850 4UL/1DL @ 29.58 dBm	862	-	mA
	GPRS GSM900 4UL/1DL @ 29.65 dBm	857	-	mA
	GPRS DCS1800 4UL/1DL @ 26.16 dBm	565	-	mA
	GPRS PCS1900 4UL/1DL @ 25.88 dBm	587	-	mA
EDGE data transfer (GNSS OFF)	EDGE GSM850 4UL/1DL @ 22.58 dBm	523	-	mA
	EDGE GSM900 4UL/1DL @ 22.66 dBm	521	-	mA
	EDGE DCS1800 4UL/1DL @ 21.7 dBm	470	-	mA
	EDGE PCS1900 4UL/1DL @ 22.23 dBm	486	-	mA

Table 22: GNSS Current Consumption

Parameter	Description	Conditions	Typ.	Unit
I_{VBAT} (GNSS)	Searching (**AT+CFUN=0**)	Cold start @ Passive Antenna	TBD	mA
		Lost state @ Passive Antenna	TBD	mA
	Tracking (**AT+CFUN=0**)	Instrument environment	TBD	mA
		Open Sky @ Passive Antenna	TBD	mA
		Open Sky @ Active Antenna	TBD	mA

7 Dimensions and Packaging

7.1. General Description

This chapter mainly describes mechanical dimensions as well as packaging specification of BG95-M3 Mini PCIe module. All dimensions are measured in millimeter (mm), and the dimensional tolerances are ±0.05 mm unless otherwise specified.

7.2. Mechanical Dimensions of BG95-M3 Mini PCIe

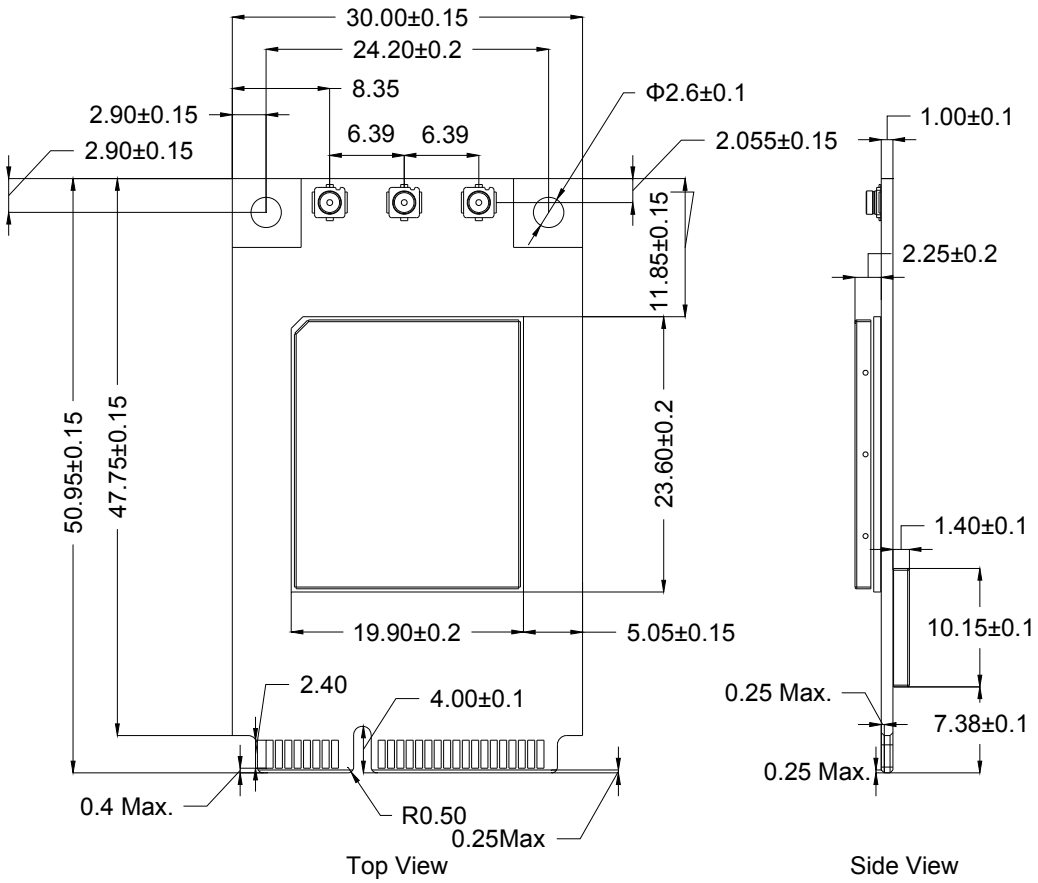

Figure 17: Mechanical Dimensions of BG95-M3 Mini PCIe

7.3. Standard Dimensions of Mini PCI Express

The following figure shows the standard dimensions of Mini PCI Express. See ***document [1]*** for Detail A and Detail B.

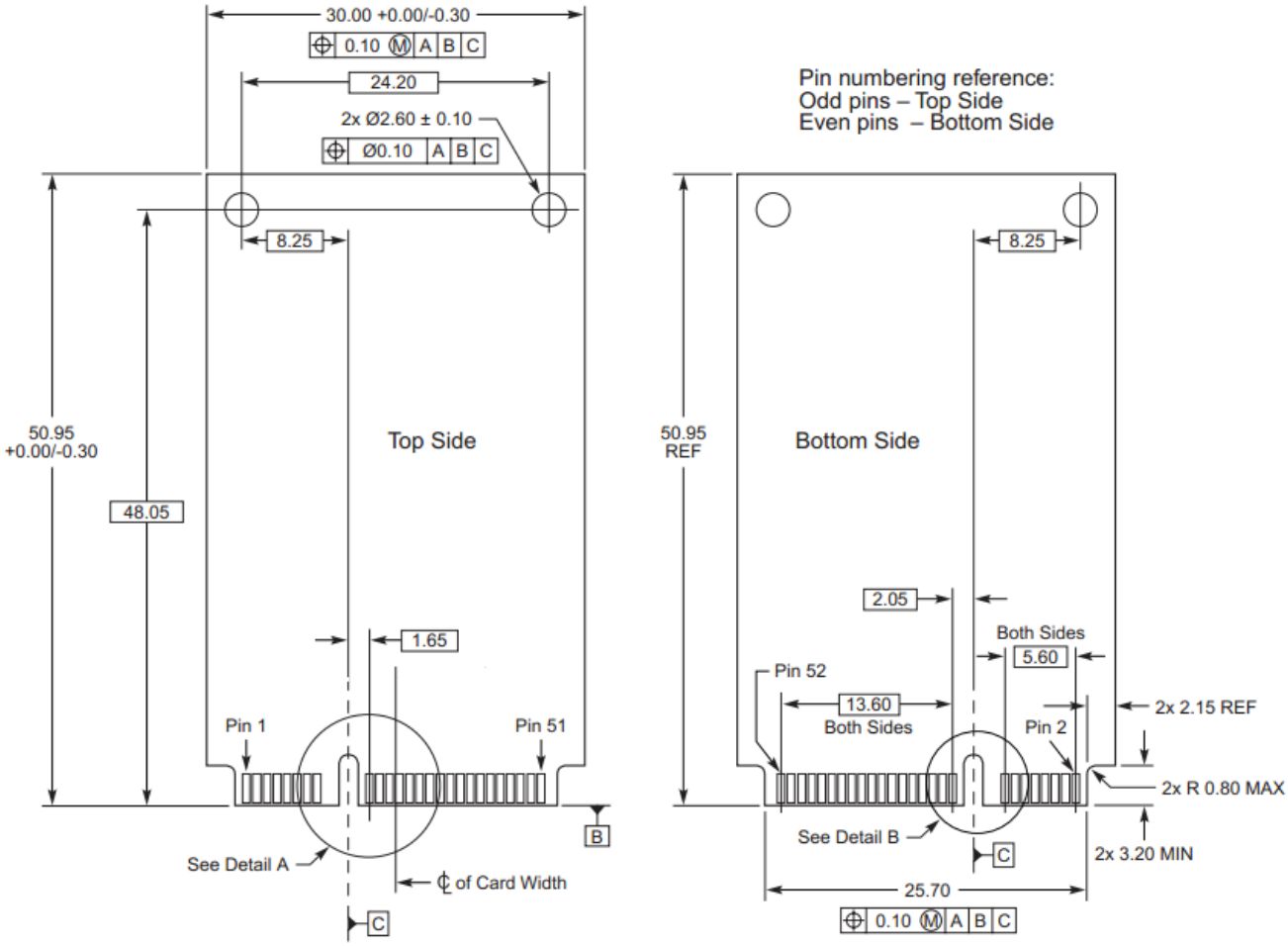

Figure 18: Standard Dimensions of Mini PCI Express

BG95-M3 Mini PCIe adopts a standard Mini PCI Express connector which compiles with the directives and standards listed in ***document [1]***. The following figure takes the Molex 679105700 as an example.

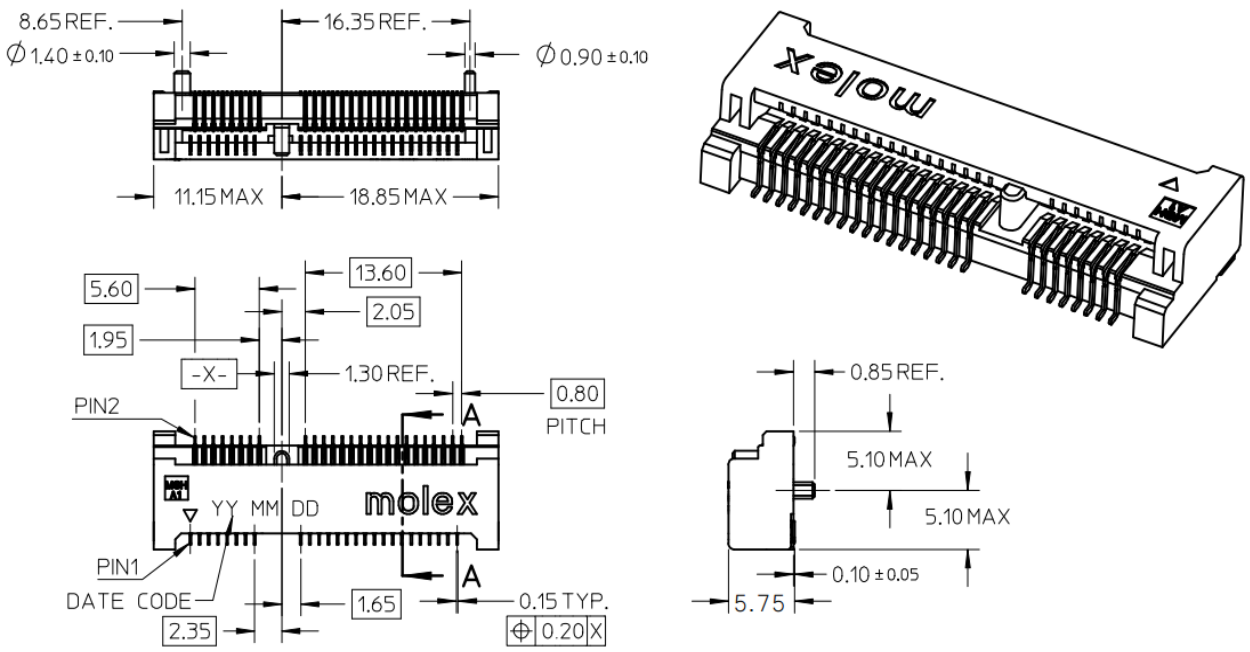

Figure 19: Dimensions of the Mini PCI Express Connector (Molex 679105700)

7.4. Packaging Specification

BG95-M3 Mini PCIe modules are packaged in a tray. Each tray contains 10 modules. The smallest package contains 100 modules.

8 Appendix A References

Table 23: Related Documents

SN	Document Name	Remark
[1]	PCI Express Mini Card Electromechanical Specification Revision 1.2	PCI Express Mini Card Electromechanical Specification
[2]	Quectel_BG95&BG77&BG600L_Series_AT_Commands_Manual	AT commands manual of BG95 series, BG77 and BG600L-M3 modules
[3]	Quectel_BG95&BG77&BG600L_Series_GNSS_Application_Note	GNSS application note of BG95 series, BG77 and BG600L-M3 modules

Table 24: Terms and Abbreviations

Abbreviation	Description
bps	Bits Per Second
CS	Coding Scheme
CTS	Clear to Send
DFOTA	Delta Firmware upgrade Over-The-Air
DL	Downlink
DTE	Data Terminal Equipment
DTR	Data Terminal Ready
EMI	Electromagnetic Interference
ESD	Electrostatic Discharge
ESR	Equivalent Series Resistance
FDD	Frequency Division Duplexing
GLONASS	GLObalnaya Navigatsionnaya Sputnikovaya Sistema, the Russian Global Navigation Satellite System

GMSK	Gaussian Minimum Shift Keying
GNSS	Global Navigation Satellite System
GPS	Global Positioning System
GSM	Global System for Mobile Communications
kbps	kilobits per second
LED	Light Emitting Diode
LTE	Long Term Evolution
Mbps	Million Bits Per Second
MCU	Micro Control Unit
ME	Mobile Equipment
NMEA	National Marine Electronics Association
PCM	Pulse Code Modulation
PDA	Personal Digital Assistant
PDU	Protocol Data Unit
POS	Point of Sale
PPP	Point-to-Point Protocol
RF	Radio Frequency
RTS	Ready To Send
RX	Receive Direction
SMS	Short Message Service
TX	Transmitting Direction
TVS	Transient Voltage Suppressor
UART	Universal Asynchronous Receiver & Transmitter
UL	Uplink
URC	Unsolicited Result Code

USB	Universal Serial Bus
(U)SIM	(Universal) Subscriber Identification Module

9 Appendix B GPRS Coding Schemes

Table 25: Description of Different Coding Schemes

Scheme	CS-1	CS-2	CS-3	CS-4
Code Rate	1/2	2/3	3/4	1
USF	3	3	3	3
Pre-coded USF	3	6	6	12
Radio Block excl. USF and BCS	181	268	312	428
BCS	40	16	16	16
Tail	4	4	4	-
Coded Bits	456	588	676	456
Punctured Bits	0	132	220	-
Data Rate (kbps)	9.05	13.4	15.6	21.4

10 Appendix C GPRS Multi-slot Classes

Twenty-nine classes of GPRS multi-slot modes are defined for MS in GPRS specification. Multi-slot classes are product dependent, and determine the maximum achievable data rates in both the uplink and downlink directions. Written as 3+1 or 2+2, the first number indicates the amount of downlink timeslots, while the second number indicates the amount of uplink timeslots. The active slots determine the total number of slots the GPRS device can use simultaneously for both uplink and downlink communications.

The description of different multi-slot classes is shown in the following table.

Table 26: GPRS Multi-slot Classes

Multislot Class	Downlink Slots	Uplink Slots	Active Slots
1	1	1	2
2	2	1	3
3	2	2	3
4	3	1	4
5	2	2	4
6	3	2	4
7	3	3	4
8	4	1	5
9	3	2	5
10	4	2	5
11	4	3	5
12	4	4	5
13	3	3	NA
14	4	4	NA

15	5	5	NA
16	6	6	NA
17	7	7	NA
18	8	8	NA
19	6	2	NA
20	6	3	NA
21	6	4	NA
22	6	4	NA
23	6	6	NA
24	8	2	NA
25	8	3	NA
26	8	4	NA
27	8	4	NA
28	8	6	NA
29	8	8	NA
30	5	1	6
31	5	2	6
32	5	3	6
33	5	4	6

11 Appendix D EDGE Modulation and Coding Schemes

Table 27: EDGE Modulation and Coding Schemes

Coding Schemes	Modulation	Coding Family	1 Timeslot	2 Timeslots	4 Timeslots
MCS-1	GMSK	C	8.80 kbps	17.60 kbps	35.20 kbps
MCS-2	GMSK	B	11.2 kbps	22.4 kbps	44.8 kbps
MCS-3	GMSK	A	14.8 kbps	29.6 kbps	59.2 kbps
MCS-4	GMSK	C	17.6 kbps	35.2 kbps	70.4 kbps
MCS-5	8-PSK	B	22.4 kbps	44.8 kbps	89.6 kbps
MCS-6	8-PSK	A	29.6 kbps	59.2 kbps	118.4 kbps
MCS-7	8-PSK	B	44.8 kbps	89.6 kbps	179.2 kbps
MCS-8	8-PSK	A	54.4 kbps	108.8 kbps	217.6 kbps
MCS-9	8-PSK	A	59.2 kbps	118.4 kbps	236.8 kbps