# SC20 Hardware Design

**Smart LTE Module Series**

Rev: SC20_Hardware_Design_V1.0

Date: 2019-12-03

www.quectel.com

**Our aim is to provide customers with timely and comprehensive service. For any assistance, please contact our company headquarters:**

**Quectel Wireless Solutions Co., Ltd.**
Building 5, Shanghai Business Park Phase III (Area B), No.1016 Tianlin Road, Minhang District, Shanghai, China 200233
Tel: +86 21 5108 6236
Email: info@quectel.com

**Or our local office. For more information, please visit:**
http://www.quectel.com/support/sales.htm

**For technical support, or to report documentation errors, please visit:**
http://www.quectel.com/support/technical.htm
Or email to: support@quectel.com

## GENERAL NOTES

QUECTEL OFFERS THE INFORMATION AS A SERVICE TO ITS CUSTOMERS. THE INFORMATION PROVIDED IS BASED UPON CUSTOMERS' REQUIREMENTS. QUECTEL MAKES EVERY EFFORT TO ENSURE THE QUALITY OF THE INFORMATION IT MAKES AVAILABLE. QUECTEL DOES NOT MAKE ANY WARRANTY AS TO THE INFORMATION CONTAINED HEREIN, AND DOES NOT ACCEPT ANY LIABILITY FOR ANY INJURY, LOSS OR DAMAGE OF ANY KIND INCURRED BY USE OF OR RELIANCE UPON THE INFORMATION. ALL INFORMATION SUPPLIED HEREIN IS SUBJECT TO CHANGE WITHOUT PRIOR NOTICE.

## COPYRIGHT

THE INFORMATION CONTAINED HERE IS PROPRIETARY TECHNICAL INFORMATION OF QUECTEL WIRELESS SOLUTIONS CO., LTD. TRANSMITTING, REPRODUCTION, DISSEMINATION AND EDITING OF THIS DOCUMENT AS WELL AS UTILIZATION OF THE CONTENT ARE FORBIDDEN WITHOUT PERMISSION. OFFENDERS WILL BE HELD LIABLE FOR PAYMENT OF DAMAGES. ALL RIGHTS ARE RESERVED IN THE EVENT OF A PATENT GRANT OR REGISTRATION OF A UTILITY MODEL OR DESIGN.

***Copyright © Quectel Wireless Solutions Co., Ltd. 2019. All rights reserved.***

# About the Document

## History

| Revision | Date | Author | Description |
|---|---|---|---|
| 1.0 | 2019-12-03 | Tony GAO | Initial |

# Contents

**About the Document** ..... **2**

**Contents** ..... **3**

**Table Index** ..... **6**

**Figure Index** ..... **8**

**1 Introduction** ..... **13**
1.1. Safety Information ..... 13

**2 Product Concept** ..... **15**
2.1. General Description ..... 15
2.2. Key Features ..... 18
2.3. Functional Diagram ..... 21
2.4. Evaluation Board ..... 22

**3 Application Interfaces** ..... **23**
3.1. General Description ..... 23
3.2. Pin Assignment ..... 24
3.3. Pin Description ..... 25
3.4. Power Supply ..... 36
3.4.1. Power Supply Pins ..... 36
3.4.2. Decrease Voltage Drop ..... 36
3.4.3. Reference Design for Power Supply ..... 37
3.5. Turn on and off Scenarios ..... 38
3.5.1. Turn on Module Using the PWRKEY ..... 38
3.5.2. Turn off Module ..... 40
3.6. VRTC Interface ..... 40
3.7. Power Output ..... 41
3.8. Battery Charge and Management ..... 42
3.9. USB Interface ..... 43
3.10. UART Interfaces ..... 45
3.11. (U)SIM Interfaces ..... 47
3.12. SD Card Interface ..... 49
3.13. GPIO Interfaces ..... 51
3.14. SPI Interface ..... 53
3.15. I2C Interfaces ..... 54
3.16. ADC Interfaces ..... 54
3.17. Motor Drive Interface ..... 55
3.18. LCM Interface ..... 56
3.19. Touch Panel Interface ..... 58
3.20. Camera Interfaces ..... 59
3.20.1. Rear Camera Interface ..... 59

3.20.2. Front Camera Interface ..... 61
3.20.3. Design Considerations ..... 63
3.21. Sensor Interfaces ..... 64
3.22. Audio Interfaces ..... 65
3.22.1. Reference Circuit Design for Microphone Interfaces ..... 66
3.22.2. Reference Circuit Design for Receiver Interface ..... 66
3.22.3. Reference Circuit Design for Headphone Interface ..... 67
3.22.4. Reference Circuit Design for Loudspeaker Interface ..... 67
3.22.5. Audio Interfaces Design Considerations ..... 67
3.23. Emergency Download Interface ..... 68

**4 Wi-Fi and BT ..... 69**
4.1. Wi-Fi Overview ..... 69
4.1.1. Wi-Fi Performance ..... 69
4.2. BT Overview ..... 70

**5 GNSS ..... 72**
5.1. GNSS Performance ..... 72
5.2. GNSS RF Design Guidelines ..... 72

**6 Antenna Interfaces ..... 74**
6.1. Main/Rx-diversity Antenna Interfaces ..... 74
6.1.1. Operating Frequency ..... 74
6.1.2. Main and Rx-diversity Antenna Interfaces Reference Design ..... 78
6.1.3. Reference Design of RF Layout ..... 78
6.2. Wi-Fi/BT Antenna Interface ..... 80
6.3. GNSS Antenna Interface ..... 81
6.3.1. Recommended Circuit for Passive Antenna ..... 82
6.3.2. Recommended Circuit for Active Antenna ..... 82
6.4. Antenna Installation ..... 83
6.4.1. Antenna Requirements ..... 83
6.4.2. Recommended RF Connector for Antenna Installation ..... 84

**7 Electrical, Reliability and Radio Characteristics ..... 86**
7.1. Absolute Maximum Ratings ..... 86
7.2. Power Supply Ratings ..... 86
7.3. Charging Performance Specifications ..... 87
7.4. Operation and Storage Temperatures ..... 88
7.5. Current Consumption ..... 88
7.6. RF Output Power ..... 103
7.7. RF Receiving Sensitivity ..... 105
7.8. Electrostatic Discharge ..... 108

**8 Mechanical Dimensions ..... 110**
8.1. Mechanical Dimensions of the Module ..... 110
8.2. Recommended Footprint ..... 112
8.3. Top and Bottom Views of the Module ..... 113

**9 Storage, Manufacturing and Packaging ..... 114**
9.1. Storage ..... 114
9.2. Manufacturing and Soldering ..... 115
9.3. Packaging ..... 117

**10 Appendix A References ..... 119**

**11 Appendix B GPRS Coding Schemes ..... 122**

**12 Appendix C GPRS Multi-slot Classes ..... 123**

**13 Appendix D EDGE Modulation and Coding Schemes ..... 125**

# Table Index

TABLE 1: SC20-CE R1.1 FREQUENCY BANDS ..... 15
TABLE 2: SC20-EL FREQUENCY BANDS ..... 16
TABLE 3: SC20-AL FREQUENCY BANDS ..... 16
TABLE 4: SC20-AUL FREQUENCY BANDS ..... 17
TABLE 5: SC20-JL FREQUENCY BANDS ..... 17
TABLE 7: SC20 KEY FEATURES ..... 18
TABLE 8: I/O PARAMETERS DEFINITION ..... 25
TABLE 9: PIN DESCRIPTION ..... 25
TABLE 10: POWER DESCRIPTION ..... 41
TABLE 11: PIN DEFINITION OF USB INTERFACE ..... 43
TABLE 12: USB TRACE LENGTH INSIDE THE MODULE ..... 45
TABLE 13: PIN DEFINITION OF UART INTERFACES ..... 45
TABLE 14: PIN DEFINITION OF (U)SIM INTERFACES ..... 47
TABLE 15: PIN DEFINITION OF SD CARD INTERFACE ..... 49
TABLE 16: SD CARD TRACE LENGTH INSIDE THE MODULE ..... 50
TABLE 17: PIN DEFINITION OF GPIO INTERFACES ..... 51
TABLE 18: PIN DEFINITION OF SPI INTERFACE ..... 53
TABLE 19: PIN DEFINITION OF I2C INTERFACES ..... 54
TABLE 20: PIN DEFINITION OF ADC INTERFACES ..... 54
TABLE 21: PIN DEFINITION OF MOTOR DRIVE INTERFACE ..... 55
TABLE 22: PIN DEFINITION OF LCM INTERFACE ..... 56
TABLE 23: PIN DEFINITION OF TOUCH PANEL INTERFACE ..... 58
TABLE 24: PIN DEFINITION OF REAR CAMERA INTERFACE ..... 59
TABLE 25: PIN DEFINITION OF FRONT CAMERA INTERFACE ..... 61
TABLE 26: MIPI TRACE LENGTH INSIDE THE MODULE ..... 63
TABLE 27: PIN DEFINITION OF SENSOR INTERFACES ..... 64
TABLE 28: PIN DEFINITION OF AUDIO INTERFACES ..... 65
TABLE 29: WI-FI TRANSMITTING PERFORMANCE ..... 69
TABLE 30: WI-FI RECEIVING PERFORMANCE ..... 69
TABLE 31: BT DATA RATE AND VERSION ..... 71
TABLE 32: BT TRANSMITTING AND RECEIVING PERFORMANCE ..... 71
TABLE 33: GNSS PERFORMANCE ..... 72
TABLE 34: PIN DEFINITION OF MAIN/RX-DIVERSITY ANTENNA INTERFACES ..... 74
TABLE 35: SC20-CE R1.1 MODULE OPERATING FREQUENCIES ..... 74
TABLE 36: SC20-EL MODULE OPERATING FREQUENCIES ..... 75
TABLE 37: SC20-AL MODULE OPERATING FREQUENCIES ..... 76
TABLE 38: SC20-AUL MODULE OPERATING FREQUENCIES ..... 76
TABLE 39: SC20-JL MODULE OPERATING FREQUENCIES ..... 77
TABLE 41: PIN DEFINITION OF WI-FI/BT ANTENNA INTERFACE ..... 80
TABLE 42: WI-FI/BT FREQUENCY ..... 81
TABLE 43: PIN DEFINITION OF GNSS ANTENNA INTERFACE ..... 81

TABLE 44: GNSS FREQUENCY ..... 82
TABLE 45: ANTENNA REQUIREMENTS ..... 83
TABLE 46: ABSOLUTE MAXIMUM RATINGS ..... 86
TABLE 47: SC20 MODULE POWER SUPPLY RATINGS ..... 86
TABLE 48: CHARGING PERFORMANCE SPECIFICATIONS ..... 87
TABLE 49: OPERATION AND STORAGE TEMPERATURES ..... 88
TABLE 50: SC20-CE R1.1 CURRENT CONSUMPTION ..... 88
TABLE 51: SC20-EL CURRENT CONSUMPTION ..... 91
TABLE 52: SC20-AL CURRENT CONSUMPTION ..... 94
TABLE 53: SC20-AUL CURRENT CONSUMPTION ..... 97
TABLE 54: SC20-JL CURRENT CONSUMPTION ..... 101
TABLE 56: RF OUTPUT POWER ..... 103
TABLE 57: SC20-CE R1.1 RF RECEIVING SENSITIVITY ..... 105
TABLE 58: SC20-EL RF RECEIVING SENSITIVITY ..... 106
TABLE 59: SC20-AL RF RECEIVING SENSITIVITY ..... 106
TABLE 60: SC20-AUL RF RECEIVING SENSITIVITY ..... 107
TABLE 61: SC20-JL RF RECEIVING SENSITIVITY ..... 108
TABLE 63: ESD CHARACTERISTICS ( TEMPERATURE: 25ºC, HUMIDITY: 45%) ..... 109
TABLE 64: RECOMMENDED THERMAL PROFILE PARAMETERS ..... 115
TABLE 65: REEL PACKAGING ..... 118
TABLE 66: RELATED DOCUMENTS ..... 119
TABLE 67: TERMS AND ABBREVIATIONS ..... 119
TABLE 68: DESCRIPTION OF DIFFERENT CODING SCHEMES ..... 122
TABLE 69: GPRS MULTI-SLOT CLASSES ..... 123
TABLE 70: EDGE MODULATION AND CODING SCHEMES ..... 125

# Figure Index

FIGURE 1: FUNCTIONAL DIAGRAM ..... 22
FIGURE 2: PIN ASSIGNMENT (TOP VIEW) ..... 24
FIGURE 3: VOLTAGE DROP SAMPLE ..... 36
FIGURE 4: STAR STRUCTURE OF THE POWER SUPPLY ..... 37
FIGURE 5: REFERENCE CIRCUIT OF POWER SUPPLY ..... 37
FIGURE 6: TURN ON THE MODULE USING DRIVING CIRCUIT ..... 38
FIGURE 7: TURN ON THE MODULE USING KEYSTROKE ..... 39
FIGURE 8: TIMING OF TURNING ON MODULE ..... 39
FIGURE 9: TIMING OF TURNING OFF MODULE ..... 40
FIGURE 10: RTC POWERED BY COIN CELL ..... 40
FIGURE 11: RTC POWERED BY CAPACITOR ..... 41
FIGURE 12: REFERENCE DESIGN FOR BATTERY CHARGING CIRCUIT ..... 42
FIGURE 13: USB INTERFACE REFERENCE DESIGN (OTG IS NOT SUPPORTED) ..... 44
FIGURE 14: USB INTERFACE REFERENCE DESIGN (OTG IS SUPPORTED) ..... 44
FIGURE 15: REFERENCE CIRCUIT WITH LEVEL TRANSLATOR CHIP (FOR UART1) ..... 46
FIGURE 16: RS-232 LEVEL MATCH CIRCUIT (FOR UART1) ..... 46
FIGURE 17: REFERENCE CIRCUIT FOR (U)SIM INTERFACE WITH AN 8-PIN (U)SIM CARD CONNECTOR ..... 48
FIGURE 18: REFERENCE CIRCUIT FOR (U)SIM INTERFACE WITH A 6-PIN (U)SIM CARD CONNECTOR ..... 48
FIGURE 19: REFERENCE CIRCUIT FOR SD CARD INTERFACE ..... 50
FIGURE 20: REFERENCE CIRCUIT FOR MOTOR CONNECTION ..... 55
FIGURE 21: REFERENCE CIRCUIT DESIGN FOR LCM INTERFACE ..... 57
FIGURE 22: REFERENCE DESIGN FOR EXTERNAL BACKLIGHT DRIVING CIRCUIT ..... 58
FIGURE 23: REFERENCE CIRCUIT DESIGN FOR TP INTERFACE ..... 59
FIGURE 24: REFERENCE CIRCUIT DESIGN FOR REAR CAMERA INTERFACE ..... 61
FIGURE 25: REFERENCE CIRCUIT DESIGN FOR FRONT CAMERA INTERFACE ..... 62
FIGURE 26: REFERENCE CIRCUIT DESIGN FOR MICROPHONE INTERFACES ..... 66
FIGURE 27: REFERENCE CIRCUIT DESIGN FOR RECEIVER INTERFACE ..... 66
FIGURE 28: REFERENCE CIRCUIT DESIGN FOR HEADPHONE INTERFACE ..... 67
FIGURE 29: REFERENCE CIRCUIT DESIGN FOR LOUDSPEAKER INTERFACE ..... 67
FIGURE 30: REFERENCE CIRCUIT DESIGN FOR EMERGENCY DOWNLOAD INTERFACE ..... 68
FIGURE 31: REFERENCE CIRCUIT DESIGN FOR MAIN AND RX-DIVERSITY ANTENNA INTERFACES ..... 78
FIGURE 32: MICROSTRIP DESIGN ON A 2-LAYER PCB ..... 79
FIGURE 33: COPLANAR WAVEGUIDE DESIGN ON A 2-LAYER PCB ..... 79
FIGURE 34: COPLANAR WAVEGUIDE DESIGN ON A 4-LAYER PCB (LAYER 3 AS REFERENCE GROUND) ..... 79
FIGURE 35: COPLANAR WAVEGUIDE DESIGN ON A 4-LAYER PCB (LAYER 4 AS REFERENCE GROUND) ..... 80
FIGURE 36: REFERENCE CIRCUIT DESIGN FOR WI-FI/BT ANTENNA ..... 81
FIGURE 37: REFERENCE CIRCUIT DESIGN FOR GNSS PASSIVE ANTENNA ..... 82

FIGURE 38: REFERENCE CIRCUIT DESIGN FOR GNSS ACTIVE ANTENNA ..... 83
FIGURE 39: DIMENSIONS OF THE U.FL-R-SMT CONNECTOR (UNIT: MM)..... 84
FIGURE 40: MECHANICALS OF U.FL-LP CONNECTORS ..... 85
FIGURE 41: SPACE FACTOR OF MATED CONNECTORS (UNIT: MM) ..... 85
FIGURE 42: MODULE TOP AND SIDE DIMENSIONS.....110
FIGURE 43: MODULE BOTTOM DIMENSIONS (TOP VIEW) .....111
FIGURE 44: RECOMMENDED FOOTPRINT (TOP VIEW) .....112
FIGURE 45: TOP VIEW OF THE MODULE .....113
FIGURE 46: BOTTOM VIEW OF THE MODULE.....113
FIGURE 47: RECOMMENDED REFLOW SOLDERING THERMAL PROFILE.....115
FIGURE 48: TAPE DIMENSIONS .....117
FIGURE 49: REEL DIMENSIONS .....117

# OEM/Integrators Installation Manual

## Important Notice to OEM integrators

1. This module is limited to OEM installation ONLY.
2. This module is limited to installation in mobile or fixed applications, according to Part 2.1091(b).
3. The separate approval is required for all other operating configurations, including portable configurations with respect to Part 2.1093 and different antenna configurations
4. For FCC Part 15.31 (h) and (k): The host manufacturer is responsible for additional testing to verify compliance as a composite system. When testing the host device for compliance with Part 15 Subpart B, the host manufacturer is required to show compliance with Part 15 Subpart B while the transmitter module(s) are installed and operating. The modules should be transmitting and the evaluation should confirm that the module's intentional emissions are compliant (i.e. fundamental and out of band emissions). The host manufacturer must verify that there are no additional unintentional emissions other than what is permitted in Part 15 Subpart B or emissions are complaint with the transmitter(s) rule(s).
The Grantee will provide guidance to the host manufacturer for Part 15 B requirements if needed.

## End Product Labeling

When the module is installed in the host device, the FCC/IC ID label must be visible through a window on the final device or it must be visible when an access panel, door or cover is easily re-moved. If not, a second label must be placed on the outside of the final device that contains the following text:
“Contains FCC ID: XMR201911SC20AL”
“Contains IC: 10224A-2019SC20AL “
The FCC ID/IC ID can be used only when all FCC/IC compliance requirements are met.

In the event that these conditions cannot be met (for example certain laptop configurations or co-location with another transmitter), then the FCC/IC authorization is no longer considered valid and the FCC ID/IC ID cannot be used on the final product. In these circumstances, the OEM integrator will be responsible for re-evaluating the end product (including the transmitter) and obtaining a separate FCC/IC authorization.

## Manual Information to the End User

The OEM integrator has to be aware not to provide information to the end user regarding how to install or remove this RF module in the user’s manual of the end product which integrates this module. The end user manual shall include all required regulatory information/warning as show in this manual.

## Federal Communication Commission Interference Statement

This device complies with Part 15 of the FCC Rules. Operation is subject to the following two conditions:

(1) This device may not cause harmful interference, and
(2) this device must accept any interference received, including interference that may cause undesired operation.
This equipment has been tested and found to comply with the limits for a Class B digital device, pursuant to Part 15 of the FCC Rules. These limits are designed to provide reasonable protection against harmful interference in a residential installation. This equipment generates, uses and can radiate radio frequency energy and, if not installed and used in accordance with the instructions, may cause harmful interference to radio communications. However, there is no guarantee that interference will not occur in a particular installation. If this equipment does cause harmful interference to radio or television reception, which can be determined by turning the equipment off and on, the user is encouraged to try to correct the interference by one of the following measures:
- Reorient or relocate the receiving antenna.
- Increase the separation between the equipment and receiver.
- Connect the equipment into an outlet on a circuit different from that to which the receiver is connected.
- Consult the dealer or an experienced radio/TV technician for help.

Any changes or modifications not expressly approved by the party responsible for compliance could void the user's authority to operate this equipment. This transmitter must not be co-located or operating in conjunction with any other antenna or transmitter.

## Industry Canada Statement

This device complies with Industry Canada's licence-exempt RSSs. Operation is subject to the following two conditions:
(1) This device may not cause interference; and
(2) This device must accept any interference, including interference that may cause undesired operation of the device.

Le présent appareil est conforme aux CNR d'Industrie Canada applicables aux appareils radio exempts de licence. L'exploitation est autorisée aux deux conditions suivantes:
(1) l'appareil ne doit pas produire de brouillage, et
(2) l'utilisateur de l'appareil doit accepter tout brouillage radioélectrique subi, même si le brouillage est susceptible d'en compromettre le fonctionnement."

The device could automatically discontinue transmission in case of absence of information to transmit, or operational failure. Note that this is not intended to prohibit transmission of control or signaling information or the use of repetitive codes where required by the technology.

The device for operation in the band 5150–5250 MHz is only for indoor use to reduce the potential for harmful interference to co-channel mobile satellite systems;
The maximum antenna gain permitted for devices in the bands 5250–5350 MHz and 5470–5725 MHz shall comply with the e.i.r.p. limit; and
The maximum antenna gain permitted for devices in the band 5725–5825 MHz shall comply with the e.i.r.p. limits specified for point-to-point and non point-to-point operation as appropriate.

L'appareil peut interrompre automatiquement la transmission en cas d'absence d'informations à transmettre ou de panne opérationnelle. Notez que ceci n'est pas destiné à interdire la transmission d'informations de contrôle ou de signalisation ou l'utilisation de codes répétitifs lorsque cela est requis par la technologie.

Le dispositif utilisé dans la bande 5150-5250 MHz est réservé à une utilisation en intérieur afin de réduire le risque de brouillage préjudiciable aux systèmes mobiles par satellite dans le même canal;
Le gain d'antenne maximal autorisé pour les dispositifs dans les bandes 5250-5350 MHz et 5470-5725 MHz doit être conforme à la norme e.r.p. limite; et
Le gain d'antenne maximal autorisé pour les appareils de la bande 5725-5825 MHz doit être conforme à la norme e.i.r.p. les limites spécifiées pour un fonctionnement point à point et non point à point, selon le cas.

CAN ICES-3(B)/ NMB-3(B)

## Radiation Exposure Statement

This equipment complies with FCC/IC radiation exposure limits set forth for an uncontrolled environment. This equipment should be installed and operated with minimum distance 20 cm between the radiator & your body.

# 1 Introduction

This document defines the SC20 module and its air interfaces and hardware interfaces which are connected with customers' application.

This document can help customers quickly understand module interface specifications, electrical and mechanical details as well as other related information of SC20 module. Associated with application note and user guide, customers can use SC20 module to design and set up mobile applications easily.

## 1.1. Safety Information

The following safety precautions must be observed during all phases of operation, such as usage, service or repair of any cellular terminal or mobile incorporating SC20 module. Manufacturers of the cellular terminal should send the following safety information to users and operating personnel, and incorporate these guidelines into all manuals supplied with the product. If not so, Quectel assumes no liability for customers' failure to comply with these precautions.

| | |
|---|---|
| | Full attention must be given to driving at all times in order to reduce the risk of an accident. Using a mobile while driving (even with a handsfree kit) causes distraction and can lead to an accident. Please comply with laws and regulations restricting the use of wireless devices while driving. |
| | Switch off the cellular terminal or mobile before boarding an aircraft. The operation of wireless appliances in an aircraft is forbidden to prevent interference with communication systems. If the device offers an Airplane Mode, then it should be enabled prior to boarding an aircraft. Please consult the airline staff for more restrictions on the use of wireless devices on boarding the aircraft. |
| | Wireless devices may cause interference on sensitive medical equipment, so please be aware of the restrictions on the use of wireless devices when in hospitals, clinics or other healthcare facilities. |

| | |
|---|---|
| | Cellular terminals or mobiles operating over radio signals and cellular network cannot be guaranteed to connect in all possible conditions (for example, with unpaid bills or with an invalid (U)SIM card). When emergent help is needed in such conditions, please remember using emergency call. In order to make or receive a call, the cellular terminal or mobile must be switched on in a service area with adequate cellular signal strength. |
| | The cellular terminal or mobile contains a transmitter and receiver. When it is ON, it receives and transmits radio frequency signals. RF interference can occur if it is used close to TV set, radio, computer or other electric equipment. |
| | In locations with potentially explosive atmospheres, obey all posted signs to turn off wireless devices such as your phone or other cellular terminals. Areas with potentially explosive atmospheres include fuelling areas, below decks on boats, fuel or chemical transfer or storage facilities, areas where the air contains chemicals or particles such as grain, dust or metal powders, etc. |

# 2 Product Concept

## 2.1. General Description

SC20 is a series of Smart LTE module based on Qualcomm platform and Linux operating system, and provides industrial grade performance. Its general features are listed below:

- Support worldwide LTE-FDD, LTE-TDD, DC-HSDPA, HSPA+, HSDPA, HSUPA, WCDMA, TD-SCDMA, EVDO/CDMA, EDGE and GPRS coverage.
- Support short-range wireless communication via Wi-Fi 802.11a/b/g/n and BT4.2 LE.
- Integrate GPS/GLONASS/BeiDou satellite positioning systems.
- Support multiple audio and video codecs.
- Built-in high performance Adreno™ 304 graphics processing unit.
- Enable smooth play of 720P videos.
- Provide multiple audio and video input/output interfaces as well as abundant GPIO interfaces.

SC20 module contains six variants: SC20-CE R1.1, SC20-EL, SC20-AL, SC20-AUL and SC20-JL. The following tables show the supported frequency bands and network standards of SC20.

**Table 1: SC20-CE R1.1 Frequency Bands**

| Type | Frequency |
|---|---|
| LTE-FDD | B1/B3/B5/B8 |
| LTE-TDD | B38/B39/B40/B41 |
| WCDMA | B1/B8 |
| TD-SCDMA | B34/B39 |
| EVDO/CDMA | BC0 |
| GSM | 900/1800MHz |
| Wi-Fi 802.11a/b/g/n | 2400MHz~2482MHz<br>5180MHz~5825MHz |

| | |
|---|---|
| BT | 2402MHz~2480MHz |
| GNSS | GPS: 1575.42MHz±1.023MHz<br>GLONASS: 1597.5MHz~1605.8MHz<br>BeiDou: 1561.098MHz±2.046MHz |

**Table 2: SC20-EL Frequency Bands**

| Type | Frequency |
|---|---|
| LTE-FDD | B1/B3/B5/B7/B8/B20 |
| LTE-TDD | B38/B40/B41 |
| WCDMA | B1/B5/B8 |
| GSM | 850/900/1800/1900MHz |
| Wi-Fi 802.11a/b/g/n | 2400MHz~2482MHz<br>5180MHz~5825MHz |
| BT4.2 LE | 2402MHz~2480MHz |
| GNSS | GPS: 1575.42MHz±1.023MHz<br>GLONASS: 1597.5MHz~1605.8MHz<br>BeiDou: 1561.098MHz±2.046MHz |

**Table 3: SC20-AL Frequency Bands**

| Type | Frequency |
|---|---|
| LTE-FDD | B2/B4/B5/B7/B12/B13/B25/B26 |
| WCDMA | B1/B2/B4/B5/B8 |
| GSM | 850/1900MHz |
| Wi-Fi 802.11a/b/g/n | 2400MHz~2482MHz<br>5180MHz~5825MHz |
| BT4.2 LE | 2402MHz~2480MHz |
| GNSS | GPS: 1575.42MHz±1.023MHz<br>GLONASS: 1597.5MHz~1605.8MHz<br>BeiDou: 1561.098MHz±2.046MHz |

**Table 4: SC20-AUL Frequency Bands**

| Type | Frequency |
|---|---|
| LTE-FDD | B1/B3/B5/B7/B8/B28 |
| LTE-TDD | B40 |
| WCDMA | B1/B2/B5/B8 |
| GSM | 850/900/1800/1900MHz |
| Wi-Fi 802.11a/b/g/n | 2400MHz~2482MHz<br>5180MHz~5825MHz |
| BT4.2 LE | 2402MHz~2480MHz |
| GNSS | GPS: 1575.42MHz±1.023MHz<br>GLONASS: 1597.5MHz~1605.8MHz<br>BeiDou: 1561.098MHz±2.046MHz |

**Table 5: SC20-JL Frequency Bands**

| Type | Frequency |
|---|---|
| LTE-FDD | B1/B3/B8/B18/B19/B26 |
| LTE-TDD | B41 |
| WCDMA | B1/B6/B8/B19 |
| Wi-Fi 802.11a/b/g/n | 2400MHz~2496MHz<br>5180MHz~5825MHz |
| BT4.2 LE | 2402MHz~2480MHz |
| GNSS | GPS: 1575.42MHz±1.023MHz<br>GLONASS: 1597.5MHz~1605.8MHz<br>BeiDou: 1561.098MHz±2.046MHz |

SC20 is an SMD type module, which can be embedded into applications through its 210-pin pads including 146 LCC signal pads and 64 LGA pads. With a compact profile of 40.5mm × 40.5mm × 2.8mm, SC20 can meet almost all requirements for M2M applications such as CPE, wireless POS, smart metering, router, data card, automotive, smart phone, digital signage, alarm panel, security and industry PDA, etc.

## 2.2. Key Features

The following table describes the detailed features of SC20 module.

**Table 6: SC20 Key Features**

| Feature | Details |
|---|---|
| Applications Processor | ARM Cortex-A7 microprocessor cores (quad-core) up to 1.1GHz<br>512KB L2 cache |
| Modem DSP | QDSP6 v5 core up to 691.2MHz<br>768KB L2 cache |
| Memory | 8GB eMMC+8Gb LPDDR3 |
| Operating System | Linux |
| Power Supply | Supply voltage: 3.5V~4.2V<br>Typical supply voltage: 3.8V |
| Transmitting Power | Class 4 (33dBm±2dB) for GSM850 and EGSM900<br>Class 1 (30dBm±2dB) for DCS1800 and PCS1900<br>Class E2 (27dBm±3dB) for GSM850 and EGSM900 8-PSK<br>Class E2 (26dBm±3dB) for DCS1800 and PCS1900 8-PSK<br>Class 3 (24dBm+1/-3dB) for WCDMA bands<br>Class 3 (24dBm+3/-1dB) for EVDO/CDMA BC0<br>Class 2 (24dBm+1/-3dB) for TD-SCDMA bands<br>Class 3 (23dBm±2dB) for LTE-FDD bands<br>Class 3 (23dBm±2dB) for LTE-TDD bands |
| LTE Features | Support 3GPP R8 Cat.4 FDD and TDD<br>Support 1.4 to 20 MHz RF bandwidth<br>Support DL 2 x 2 MIMO<br>● FDD: Max 150Mbps (DL)/Max 50Mbps (UL)<br>● TDD: Max 130Mbps (DL)/Max 30Mbps (UL) |
| UMTS Features | Support 3GPP R8 DC-HSDPA/HSPA+/HSDPA/HSUPA/WCDMA<br>Support 16-QAM, 64-QAM and QPSK modulation<br>● DC-HSDPA: Max 42Mbps (DL)<br>● HSUPA: Max 5.76Mbps (UL)<br>● WCDMA: Max 384Kbps (DL)/Max 384Kbps (UL) |
| TD-SCDMA Features | Support CCSA Release 3<br>● Max 4.2Mbps (DL)/Max 2.2Mbps (UL) |
| CDMA2000 Features | Support 3GPP2 CDMA2000 1X Advanced, CDMA2000 1x EV-DO Rev.A<br>● EVDO: Max 3.1Mbps (DL)/Max 1.8Mbps (UL)<br>● 1X Advanced: Max 307.2Kbps (DL)/Max 307.2Kbps (UL) |

| | |
|---|---|
| GSM Features | **R99:**<br>CSD: 9.6kbps, 14.4kbps<br>**GPRS:**<br>Support GPRS multi-slot class 33 (33 by default)<br>Coding scheme: CS-1, CS-2, CS-3 and CS-4<br>Max 85.6Kbps (UL)/Max 107Kbps (DL)<br>**EDGE:**<br>Support EDGE multi-slot class 33 (33 by default)<br>Support GMSK and 8-PSK for different MCS (Modulation and Coding Scheme)<br>Downlink coding schemes: CS 1-4 and MCS 1-9<br>Uplink coding schemes: CS 1-4 and MCS 1-9<br>Max 236.8Kbps (UL)/Max 296Kbps (DL) |
| WLAN Features | Support 2.4GHz and 5GHz frequency bands<br>Support 802.11a/b/g/n, maximally up to 150Mbps<br>Support AP mode |
| Bluetooth Feature | BT4.2 LE |
| GNSS Features | GPS/GLONASS/BeiDou |
| SMS | Text and PDU mode<br>Point-to-point MO and MT<br>SMS cell broadcast<br>SMS storage: ME by default |
| LCM Interface | 4-lane MIPI_DSI, up to 1.5Gbps per lane<br>Support WVGA (2-lane MIPI_DSI), up to 720p (4-lane MIPI_DSI)<br>24bit color depth |
| Camera Interfaces | Use MIPI_CSI, up to 1.5Gbps per lane<br>Support two cameras:<br>2-lane MIPI_CSI for rear camera, max pixel up to 8MP<br>1-lane MIPI_CSI for front camera, max pixel up to 2MP |
| Video Codec | **Video encoding:**<br>H.264 BP/MP – 720p @30fps<br>MPEG-4 SP/H.263 P0 – WVGA @30fps<br>VP8 – WVGA @30fps<br>**Video decoding:**<br>H.264 BP/MP/HP – 1080P @30fps<br>MPEG-4 SP/ASP –1080P @30fps<br>DivX 4x/5x/6x –1080P @30fps<br>H.263 P0 – WVGA @30fps<br>VP8 –1080P @30 fps<br>(HEVC) H.265 MP 8 bit –1080P @30fps |
| Audio Interfaces | **Audio input:**<br>Two analog microphone inputs, integrating internal bias voltage |

| | |
|---|---|
| | **Audio output:**<br>Class AB stereo headphone output<br>Class AB earpiece differential output<br>Class D speaker differential amplifier output |
| Audio Codec | HR, FR, EFR, AMR, AMR-WB |
| USB Interface | Compliant with USB 2.0 specification; the data transfer rate can reach up to 480Mbps<br>Used for AT command communication, data transmission, software debugging and firmware upgrade<br>Support USB OTG (Need additional 5V power supply chip)<br>USB Driver: Support Windows XP, Windows Vista, Windows 7/8/8.1 |
| (U)SIM Interfaces | Two (U)SIM interfaces<br>Support USIM/SIM card: 1.8V and 2.95V<br>Support Dual SIM Dual Standby (supported by default) |
| UART Interfaces | Two UART interfaces: UART1 and UART2<br>● UART1: 4-wire UART interface with RTS/CTS hardware flow control; baud rate up to 3.75Mbps<br>● UART2: 2-wire UART interface used for debugging |
| Motor Drive Interface | Drive ERM motor |
| SD Card Interface | Support SD 3.0, 4-bit SDIO<br>Support hot-plug |
| I2C Interfaces | Three I2C interfaces<br>Used for peripherals such as camera, sensor, touch panel, etc. |
| ADC Interfaces | Support three ADC interfaces<br>Used for input voltage sense, battery temperature detection and general-purpose ADC |
| Real Time Clock | Supported |
| Antenna Interfaces | Main antenna, DRX antenna, GNSS antenna and Wi-Fi/BT antenna |
| Physical Characteristics | Size: (40.5±0.15) × (40.5±0.15) × (2.8±0.2)mm<br>Package: LCC<br>Weight: approx. 9.8g |
| Temperature Range | Operating temperature range: -35°C~+65°C [1)]<br>Extended temperature range: -40°C~+75°C [2)]<br>Storage temperature range: -40°C ~ +90°C |
| Firmware Upgrade | Over USB interface |
| RoHS | All hardware components are fully compliant with EU RoHS directive |

**NOTES**

1. [1] Within operation temperature range, the module is 3GPP compliant.
2. [2] Within extended temperature range, the module remains the ability to establish and maintain a voice, SMS, data transmission, emergency call, etc. There is no unrecoverable malfunction. There are also no effects on radio spectrum and no harm to radio network. Only one or more parameters like $P_{out}$ might reduce in their value and exceed the specified tolerances. When the temperature returns to the normal operating temperature levels, the module will meet 3GPP specifications again.

## 2.3. Functional Diagram

The following figure shows a block diagram of SC20 and illustrates the major functional parts.

- Power management
- Radio frequency
- Baseband
- LPDDR3+eMMC flash
- Peripheral interfaces
  --USB interface
  --UART interfaces
  --(U)SIM interfaces
  --SD card interface
  --GPIO interfaces
  --I2C interfaces
  --ADC interfaces
  --LCM (MIPI) interface
  --Touch panel interface
  --CAM (MIPI) interfaces
  --Audio interfaces

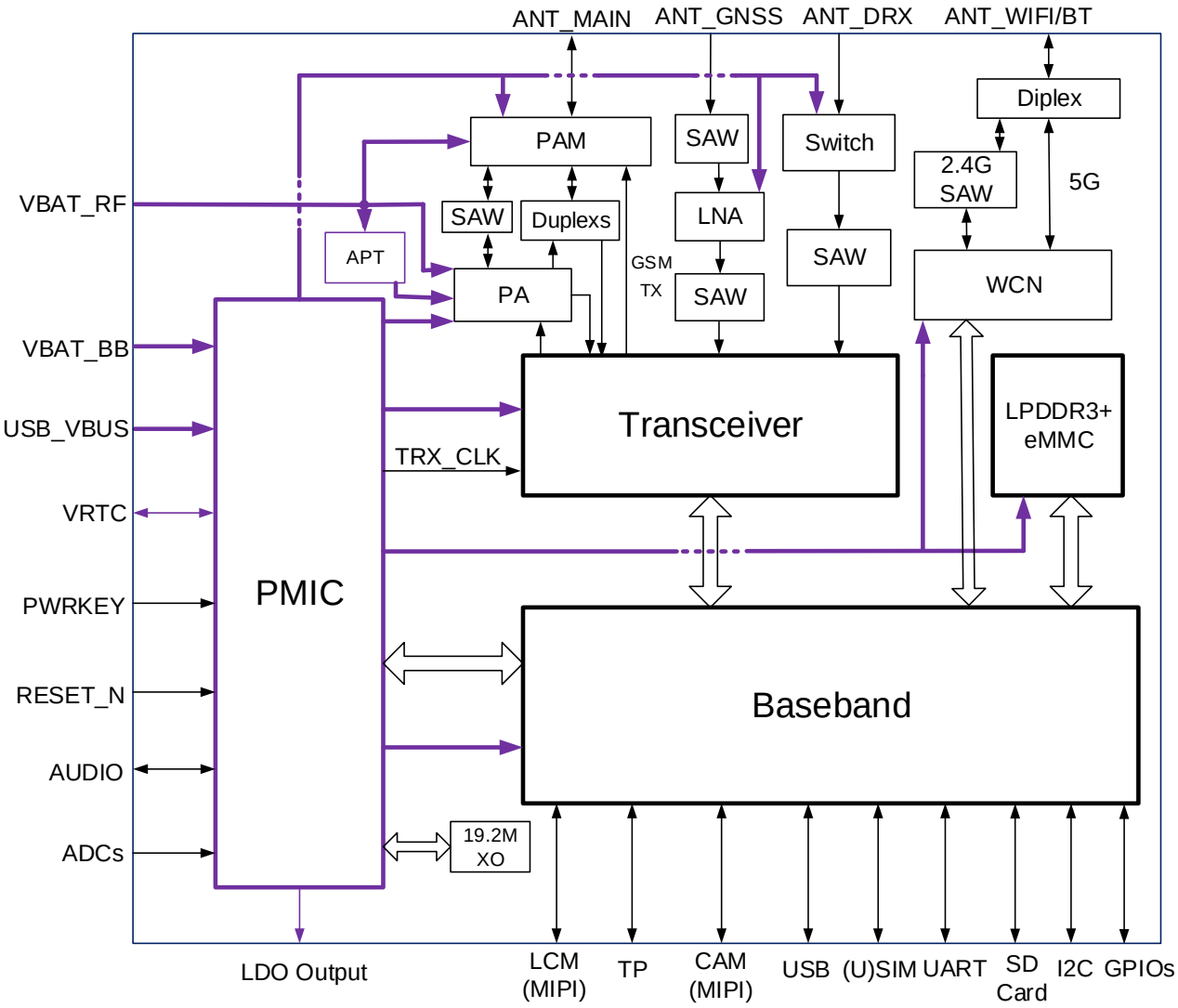


**Figure 1: Functional Diagram**

## 2.4. Evaluation Board

In order to help customers to develop applications with SC20, Quectel supplies the evaluation board (SMART EVB), USB to RS232 converter cable, USB data cable, power adapter, earphone, antenna and other peripherals to control or test the module. For more details, please refer to ***document [1]***.

# 3 Application Interfaces

## 3.1. General Description

SC20 is an SMD type module with 146 LCC pads and 64 LGA pads. The following chapters provide the detailed description of pins/interfaces listed below.

- Power supply
- VRTC interface
- USB interface
- UART interfaces
- (U)SIM interfaces
- SD card interface
- GPIO interfaces
- SPI interface
- I2C interfaces
- ADC interfaces
- Motor drive interface
- LCM interface
- Touch panel interface
- Camera interfaces
- Sensor interfaces
- Audio interfaces
- Emergency download interface

## 3.2. Pin Assignment

The following figure shows the pin assignment of SC20 module.

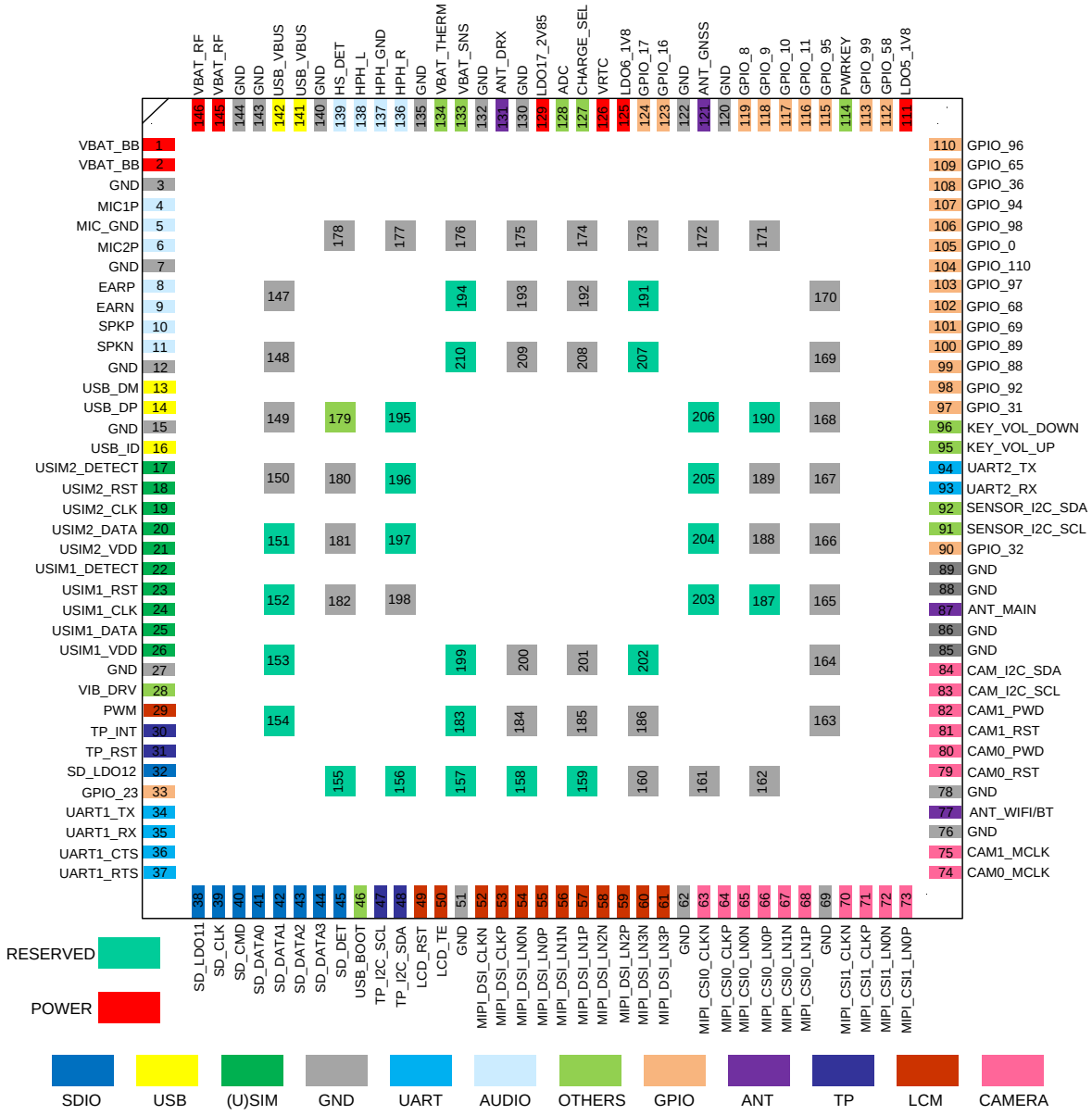


**Figure 2: Pin Assignment (Top View)**

## 3.3. Pin Description

The following tables show the SC20's pin definition.

**Table 7: I/O Parameters Definition**

| Type | Description |
|---|---|
| IO | Bidirectional |
| DI | Digital input |
| DO | Digital output |
| PI | Power input |
| PO | Power output |
| AI | Analog input |
| AO | Analog output |
| OD | Open drain |

The following tables show the SC20's pin definition and electrical characteristics.

**Table 8: Pin Description**

| **Power Supply** | | | | | |
|---|---|---|---|---|---|
| **Pin Name** | **Pin No.** | **I/O** | **Description** | **DC Characteristics** | **Comment** |
| VBAT_BB | 1, 2 | PI | Power supply for module's baseband part. | Vmax=4.2V<br>Vmin=3.5V<br>Vnorm=3.8V | It must be able to provide sufficient current up to 3.0A.<br>It is suggested to use a zener diode for voltage stabilization. |
| VBAT_RF | 145, 146 | PI | Power supply for module's RF part. | Vmax=4.2V<br>Vmin=3.5V<br>Vnorm=3.8V | |
| VRTC | 126 | PI/PO | Power supply for internal RTC circuit. | $V_O$max=3.2V<br>$V_I$=2.0V~3.25V | If unused, keep this pin open. |
| LDO5_1V8 | 111 | PO | 1.8V output power supply | Vnorm=1.8V<br>$I_O$max=20mA | Power supply for external GPIO's pull up circuits and level |

| | | | | | |
|---|---|---|---|---|---|
| | | | | | shift circuit. |
| LDO6_1V8 | 125 | PO | 1.8V output power supply | Vnorm=1.8V<br>$I_O$max=100mA | Power supply for peripherals.<br>2.2uF~4.7uF capacitor is recommended to be applied to the LDO6_1V8 pin.<br>If unused, keep this pin open. |
| LDO17_2V85 | 129 | PO | 2.85V output power supply | Vnorm=2.85V<br>$I_O$max=300mA | Power supply for peripherals.<br>2.2uF~4.7uF capacitor is recommended to be applied to the LDO17_2V85 pin.<br>If unused, keep this pin open. |
| SD_LDO11 | 38 | PO | Power supply for SD card. | Vnorm=2.95V<br>$I_O$max=600mA | |
| SD_LDO12 | 32 | PO | 1.8V/2.95V output power supply | Vnorm=2.95V<br>$I_O$max=50mA | Power supply for SD's pull up circuits. |
| GND | 3, 7, 12, 15, 27, 51, 62, 69, 76, 78, 85, 86, 88, 89, 120, 122, 130, 132, 135, 140, 143, 144, 147~150, 160~178, 180~182, 184~186, 188~189, 192~193, | | GND | | |

| | | | | | |
|---|---|---|---|---|---|
| | 198~200, 201~208, 209 | | | | |
| **Audio Interfaces** | | | | | |
| **Pin Name** | **Pin No.** | **I/O** | **Description** | **DC Characteristics** | **Comment** |
| MIC1P | 4 | AI | Microphone positive input for channel 1 | | |
| MIC_GND | 5 | | MIC reference ground | | |
| MIC2P | 6 | AI | Microphone positive input for channel 2 | | |
| EARP | 8 | AO | Earpiece positive output | | |
| EARN | 9 | AO | Earpiece negative output | | |
| SPKP | 10 | AO | Speaker positive output | | |
| SPKN | 11 | AO | Speaker negative output | | |
| HPH_R | 136 | AO | Headphone right channel output | | |
| HPH_GND | 137 | AI | Headphone virtual ground | | |
| HPH_L | 138 | AO | Headphone left channel output | | |
| HS_DET | 139 | AI | Headset insertion detection | | High level by default. |
| **USB Interface** | | | | | |
| **Pin Name** | **Pin No.** | **I/O** | **Description** | **DC Characteristics** | **Comment** |
| USB_VBUS | 141, 142 | PI | USB power supply | Vmax=6.3V<br>Vmin=4.35V<br>Vnorm=5.0V | Used for USB 5V power input and USB detection. |
| USB_DM | 13 | IO | USB differential data bus (minus) | Compliant with USB 2.0 standard specification. | Require differential impedance of 90Ω. |
| USB_DP | 14 | IO | USB differential data bus (plus) | | |

| | | | | | |
|---|---|---|---|---|---|
| USB_ID | 16 | AI | USB ID detection | | High level by default. |
| **(U)SIM Interfaces** | | | | | |
| **Pin Name** | **Pin No.** | **I/O** | **Description** | **DC Characteristics** | **Comment** |
| USIM2_ DETECT | 17 | DI | (U)SIM2 card hot-plug detection | $V_{IL}$max=0.63V<br>$V_{IH}$min=1.17V | Active Low. External pull-up resistor is required.<br>If unused, keep this pin open. |
| USIM2_RST | 18 | DO | (U)SIM2 card reset signal | $V_{OL}$max=0.4V<br>$V_{OH}$min= 0.8×USIM2_VDD | |
| USIM2_CLK | 19 | DO | (U)SIM2 card clock signal | $V_{OL}$max=0.4V<br>$V_{OH}$min= 0.8×USIM2_VDD | |
| USIM2_DATA | 20 | IO | (U)SIM2 card data signal | $V_{IL}$max= 0.2×USIM2_VDD<br>$V_{IH}$min= 0.7×USIM2_VDD<br>$V_{OL}$max=0.4V<br>$V_{OH}$min= 0.8×USIM2_VDD | |
| USIM2_VDD | 21 | PO | (U)SIM2 card power supply | **For 1.8V (U)SIM:**<br>Vmax=1.85V<br>Vmin=1.75V<br>**For 2.95V (U)SIM:**<br>Vmax=3.1V<br>Vmin=2.8V | Either 1.8V or 2.95V (U)SIM card is supported by the module automatically. |
| USIM1_ DETECT | 22 | DI | (U)SIM1 card hot-plug detection | $V_{IL}$max=0.63V<br>$V_{IH}$min=1.17V | Active low. External pull-up resistor is required.<br>If unused, keep this pin open. |
| USIM1_RST | 23 | DO | (U)SIM1 card reset signal | $V_{OL}$max=0.4V<br>$V_{OH}$min= 0.8×USIM1_VDD | |
| USIM1_CLK | 24 | DO | (U)SIM1 card clock signal | $V_{OL}$max=0.4V<br>$V_{OH}$min= 0.8×USIM1_VDD | |
| USIM1_DATA | 25 | IO | (U)SIM1 card data signal | $V_{IL}$max= 0.2×USIM1_VDD | |

| | | | | | |
|---|---|---|---|---|---|
| | | | | $V_{IH}$min= 0.7×USIM1_VDD<br>$V_{OL}$max=0.4V<br>$V_{OH}$min= 0.8×USIM1_VDD | |
| USIM1_VDD | 26 | PO | (U)SIM1 card power supply | **For 1.8V (U)SIM:**<br>Vmax=1.85V<br>Vmin=1.75V<br><br>**For 2.95V (U)SIM:**<br>Vmax=3.1V<br>Vmin=2.8V | Either 1.8V or 2.95V (U)SIM card is supported by the module automatically |
| **UART Interfaces** | | | | | |
| **Pin Name** | **Pin No.** | **I/O** | **Description** | **DC Characteristics** | **Comment** |
| UART1_TX | 34 | DO | UART1 transmit data | $V_{OL}$max=0.45V<br>$V_{OH}$min=1.35V | 1.8V power domain. If unused, keep this pin open. |
| UART1_RX | 35 | DI | UART1 receive data | $V_{IL}$max=0.63V<br>$V_{IH}$min=1.17V | 1.8V power domain. If unused, keep this pin open. |
| UART1_CTS | 36 | DI | UART1 clear to send | $V_{IL}$max=0.63V<br>$V_{IH}$min=1.17V | 1.8V power domain. If unused, keep this pin open. |
| UART1_RTS | 37 | DO | UART1 request to send | $V_{OL}$max=0.45V<br>$V_{OH}$min=1.35V | 1.8V power domain. If unused, keep this pin open. |
| UART2_RX | 93 | DI | UART2 receive data.<br>Debug port by default. | $V_{IL}$max=0.63V<br>$V_{IH}$min=1.17V | 1.8V power domain. If unused, keep this pin open. |
| UART2_TX | 94 | DO | UART2 transmit data.<br>Debug port by default. | $V_{OL}$max=0.45V<br>$V_{OH}$min=1.35V | 1.8V power domain. If unused, keep this pin open. |
| **SD Card Interface** | | | | | |
| **Pin Name** | **Pin No.** | **I/O** | **Description** | **DC Characteristics** | **Comment** |
| SD_CLK | 39 | DO | High speed digital clock signal of SD card | **1.8V SD card:**<br>$V_{OL}$max=0.45V<br>$V_{OH}$min=1.4V | |

| | | | | | |
|---|---|---|---|---|---|
| | | | | **2.95V SD card:**<br>$V_{OL}$max=0.37V<br>$V_{OH}$min=2.2V | |
| SD_CMD | 40 | IO | Command signal of SD card | **1.8V SD card:**<br>$V_{IL}$max=0.58V<br>$V_{IH}$min=1.27V<br>$V_{OL}$max=0.45V<br>$V_{OH}$min=1.4V<br><br>**2.95V SD card:**<br>$V_{IL}$max=0.73V<br>$V_{IH}$min=1.84V<br>$V_{OL}$max=0.37V<br>$V_{OH}$min=2.2V | |
| SD_DATA0 | 41 | IO | High speed bidirectional digital signal lines of SD card | **1.8V SD card:**<br>$V_{IL}$max=0.58V<br>$V_{IH}$min=1.27V<br>$V_{OL}$max=0.45V<br>$V_{OH}$min=1.4V<br><br>**2.95V SD card:**<br>$V_{IL}$max=0.73V<br>$V_{IH}$min=1.84V<br>$V_{OL}$max=0.37V<br>$V_{OH}$min=2.2V | |
| SD_DATA1 | 42 | IO | | | |
| SD_DATA2 | 43 | IO | | | |
| SD_DATA3 | 44 | IO | | | |
| SD_DET | 45 | DI | SD card insertion detection | $V_{IL}$max=0.63V<br>$V_{IH}$min=1.17V | Active low |
| **Touch Panel (TP) Interface** | | | | | |
| **Pin Name** | **Pin No.** | **I/O** | **Description** | **DC Characteristics** | **Comment** |
| TP_INT | 30 | DI | Interrupt signal of TP | $V_{IL}$max=0.63V<br>$V_{IH}$min=1.17V | 1.8V power domain. |
| TP_RST | 31 | DO | Reset signal of TP | $V_{OL}$max=0.45V<br>$V_{OH}$min=1.35V | 1.8V power domain.<br>Active low. |
| TP_I2C_SCL | 47 | OD | I2C clock signal of TP | | 1.8V power domain. |
| TP_I2C_SDA | 48 | OD | I2C data signal of TP | | 1.8V power domain. |

| LCM Interface | | | | | |
|---|---|---|---|---|---|
| **Pin Name** | **Pin No.** | **I/O** | **Description** | **DC Characteristics** | **Comment** |
| PWM | 29 | DO | Adjust the backlight brightness.<br>PWM control signal. | $V_{OL}$max=0.45V<br>$V_{OH}$max=VBAT_BB | |
| LCD_RST | 49 | DO | LCD reset signal | $V_{OL}$max=0.45V<br>$V_{OH}$min=1.35V | 1.8V power domain.<br>Active low. |
| LCD_TE | 50 | DI | LCD tearing effect signal | $V_{IL}$max=0.63V<br>$V_{IH}$min=1.17V | 1.8V power domain. |
| MIPI_DSI_CLKN | 52 | AO | MIPI DSI clock signal (negative) | | |
| MIPI_DSI_CLKP | 53 | AO | MIPI DSI clock signal (positive) | | |
| MIPI_DSI_LN0N | 54 | AO | MIPI DSI data signal (negative) | | |
| MIPI_DSI_LN0P | 55 | AO | MIPI DSI data signal (positive) | | |
| MIPI_DSI_LN1N | 56 | AO | MIPI DSI data signal (negative) | | |
| MIPI_DSI_LN1P | 57 | AO | MIPI DSI data signal (positive) | | |
| MIPI_DSI_LN2N | 58 | AO | MIPI DSI data signal (negative) | | |
| MIPI_DSI_LN2P | 59 | AO | MIPI DSI data signal (positive) | | |
| MIPI_DSI_LN3N | 60 | AO | MIPI DSI data signal (negative) | | |
| MIPI_DSI_LN3P | 61 | AO | MIPI DSI data signal (positive) | | |
| **Camera Interfaces** | | | | | |
| **Pin Name** | **Pin No** | **I/O** | **Description** | **DC Characteristics** | **Comment** |
| MIPI_CSI0_CLKN | 63 | AI | MIPI CSI clock signal (negative) | | |

| | | | | | |
|---|---|---|---|---|---|
| MIPI_CSI0_CLKP | 64 | AI | MIPI CSI clock signal (positive) | | |
| MIPI_CSI0_LN0N | 65 | AI | MIPI CSI data signal (negative) | | |
| MIPI_CSI0_LN0P | 66 | AI | MIPI CSI data signal (positive) | | |
| MIPI_CSI0_LN1N | 67 | AI | MIPI CSI data signal (negative) | | |
| MIPI_CSI0_LN1P | 68 | AI | MIPI CSI data signal (positive) | | |
| MIPI_CSI1_CLKN | 70 | AI | MIPI CSI clock signal (negative) | | |
| MIPI_CSI1_CLKP | 71 | AI | MIPI CSI clock signal (positive) | | |
| MIPI_CSI1_LN0N | 72 | AI | MIPI CSI data signal (negative) | | |
| MIPI_CSI1_LN0P | 73 | AI | MIPI CSI data signal (positive) | | |
| CAM0_MCLK | 74 | DO | Clock signal of rear camera | $V_{OL}$max=0.45V<br>$V_{OH}$min=1.35V | |
| CAM1_MCLK | 75 | DO | Clock signal of front camera | $V_{OL}$max=0.45V<br>$V_{OH}$min=1.35V | |
| CAM0_RST | 79 | DO | Reset signal of rear camera | $V_{OL}$max=0.45V<br>$V_{OH}$min=1.35V | |
| CAM0_PWD | 80 | DO | Power down signal of rear camera | $V_{OL}$max=0.45V<br>$V_{OH}$min=1.35V | |
| CAM1_RST | 81 | DO | Reset signal of front camera | $V_{OL}$max=0.45V<br>$V_{OH}$min=1.35V | |
| CAM1_PWD | 82 | DO | Power down signal of front camera | $V_{OL}$max=0.45V<br>$V_{OH}$min=1.35V | |
| CAM_I2C_SCL | 83 | OD | I2C clock signal of camera | | 1.8V power domain. |

| | | | | | |
|---|---|---|---|---|---|
| CAM_I2C_SDA | 84 | OD | I2C data signal of camera | | 1.8V power domain. |
| **Keypad Interfaces** | | | | | |
| **Pin Name** | **Pin No** | **I/O** | **Description** | **DC Characteristics** | **Comment** |
| PWRKEY | 114 | DI | Turn on/off the module | $V_{IL}$max=0.63V<br>$V_{IH}$min=1.17V | Pull-up to 1.8V internally, active low. |
| KEY_VOL_UP | 95 | DI | Volume up | $V_{IL}$max=0.63V<br>$V_{IH}$min=1.17V | If unused, keep this pin open. |
| KEY_VOL_DOWN | 96 | DI | Volume down | $V_{IL}$max=0.63V<br>$V_{IH}$min=1.17V | If unused, keep this pin open. |
| **SENSOR_I2C Interfaces** | | | | | |
| **Pin Name** | **Pin No.** | **I/O** | **Description** | **DC Characteristics** | **Comment** |
| SENSOR_I2C_SCL | 91 | OD | I2C clock signal for external sensor | | 1.8V power domain. |
| SENSOR_I2C_SDA | 92 | OD | I2C data signal for external sensor | | 1.8V power domain. |
| **ADC Interfaces** | | | | | |
| **Pin Name** | **Pin No.** | **I/O** | **Description** | **DC Characteristics** | **Comment** |
| ADC | 128 | AI | General purpose ADC | | Maximum voltage not exceeding 1.7V. |
| VBAT_SNS | 133 | AI | Input voltage sense | | Maximum input voltage is 4.5V. |
| VBAT_THERM | 134 | AI | Battery temperature detection | | |
| **RF Interfaces** | | | | | |
| **Pin Name** | **Pin No.** | **I/O** | **Description** | **DC Characteristics** | **Comment** |
| ANT_MAIN | 87 | IO | Main antenna | | 50Ω impedance |
| ANT_DRX | 131 | AI | Diversity antenna | | |
| ANT_GNSS | 121 | AI | GNSS antenna | | |
| ANT_WIFI/BT | 77 | IO | Wi-Fi/BT antenna | | |

| GPIO Interfaces | | | | | |
|---|---|---|---|---|---|
| **Pin Name** | **Pin No.** | **I/O** | **Description** | **DC Characteristics** | **Comment** |
| GPIO_23 | 33 | IO | GPIO | | 1.8V power domain. |
| GPIO_32 | 90 | IO | GPIO | | 1.8V power domain. |
| GPIO_31 | 97 | IO | GPIO | | 1.8V power domain. |
| GPIO_92 | 98 | IO | GPIO | | 1.8V power domain. |
| GPIO_88 [1)] | 99 | IO | GPIO | | 1.8V power domain. |
| GPIO_89 | 100 | IO | GPIO | | 1.8V power domain. |
| GPIO_69 | 101 | IO | GPIO | | 1.8V power domain. |
| GPIO_68 [1)] | 102 | IO | GPIO | | 1.8V power domain. |
| GPIO_97 | 103 | IO | GPIO | | 1.8V power domain. |
| GPIO_110 | 104 | IO | GPIO | | 1.8V power domain. |
| GPIO_0 | 105 | IO | GPIO | $V_{IL}$max=0.63V<br>$V_{IH}$min=1.17V<br>$V_{OL}$max=0.45V<br>$V_{OH}$min=1.4V | 1.8V power domain. |
| GPIO_98 | 106 | IO | GPIO | | 1.8V power domain. |
| GPIO_94 | 107 | IO | GPIO | | 1.8V power domain. |
| GPIO_36 | 108 | IO | GPIO | | 1.8V power domain. |
| GPIO_65 | 109 | IO | GPIO | | 1.8V power domain. |
| GPIO_96 | 110 | IO | GPIO | | 1.8V power domain. |
| GPIO_58 | 112 | IO | GPIO | | 1.8V power domain. |
| GPIO_99 | 113 | IO | GPIO | | 1.8V power domain. |
| GPIO_95 | 115 | IO | GPIO | | 1.8V power domain. |
| GPIO_11 | 116 | IO | GPIO | | Can be multiplexed into SPI_CLK. |
| GPIO_10 | 117 | IO | GPIO | | Can be multiplexed into SPI_CS_N. |
| GPIO_9 | 118 | IO | GPIO | | Can be multiplexed into SPI_MISO. |
| GPIO_8 | 119 | IO | GPIO | | Can be multiplexed |

| | | | | | |
|---|---|---|---|---|---|
| | | | | | into SPI_MOSI. |
| GPIO_16 | 123 | IO | GPIO | | 1.8V power domain. |
| GPIO_17 | 124 | IO | GPIO | | 1.8V power domain. |
| **Other Interfaces** | | | | | |
| **Pin Name** | **Pin No.** | **I/O** | **Description** | **DC Characteristics** | **Comment** |
| VIB_DRV | 28 | PO | Motor drive | Imax=0~175mA<br>Vmax=1.2V~3.1V | Connected to the negative terminal of the motor. |
| RESET_N [2)] | 179 | DI | Reset the module | | Disabled by default and can be enabled through software configuration. |
| USB_BOOT | 46 | DI | Force the module to boot from USB port | | Set USB_BOOT to high level will force the module to enter into emergency download mode. |
| CHARGE_SEL | 127 | DI | Used for charger selection | | If it is open, internal charger is used.<br>If it is connected to GND, external charger is used. |
| **Reserved Interfaces** | | | | | |
| **Pin Name** | **Pin No.** | **I/O** | **Description** | **DC Characteristics** | **Comment** |
| RESERVED | 151, 152, 153, 154, 155, 156, 157, 158, 159, 183, 187, 190, 191, 194, 195, 196, 197, 199, 202, 203, 204, 205, 206, 207, 210 | | Reserved pins | | Keep these pins open. |

**NOTES**

1. [1] GPIO_68 and GPIO_88 cannot be pulled up during start-up.
2. [2] RESET_N is disabled by default and can be enabled through software configuration.

## 3.4. Power Supply

### 3.4.1. Power Supply Pins

SC20 provides two VBAT_RF pins and two VBAT_BB pins for connecting with an external power supply. The VBAT_RF pins are used for the RF part of the module and the VBAT_BB pins are used for the baseband part of the module.

### 3.4.2. Decrease Voltage Drop

The power supply range of the module is 3.5V~4.2V, and the recommended value is 3.8V. The power supply performance, such as load capacity, voltage ripple, etc. directly influences the module's performance and stability. Under ultimate conditions, the transient peak current of the module may surge up to 3A. If the supply voltage is not enough, there will be voltage drops, and if the voltage drops below 3.1V, the module will be turned off automatically. Therefore, please make sure the input voltage will never drop below 3.1V.

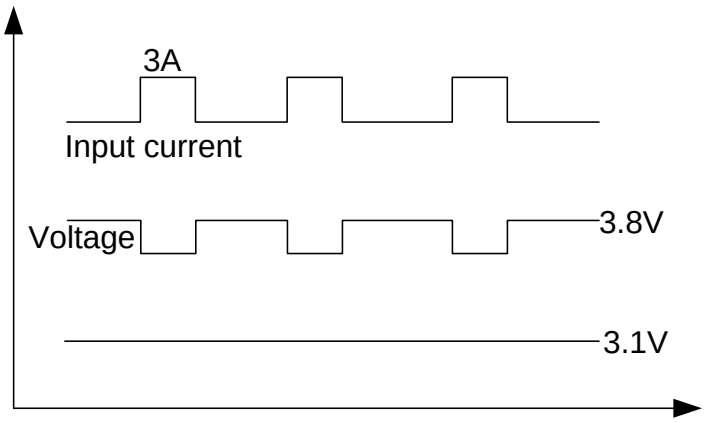


**Figure 3: Voltage Drop Sample**

To decrease voltage drop, a bypass capacitor of about 100μF with low ESR (ESR=0.7Ω) should be used, and a multi-layer ceramic chip capacitor (MLCC) should also be reserved due to its ultra-low ESR. It is recommended to use three ceramic capacitors (100nF, 33pF, 10pF) for composing the MLCC array, and place these capacitors close to VBAT_BB/RF pins. The main power supply from an external application

has to be a single voltage source and can be expanded to two sub paths with star structure. The width of VBAT_BB trace should be no less than 1.5mm, and the width of VBAT_RF trace should be no less than 2mm. In principle, the longer the VBAT trace is, the wider it will be.

In addition, in order to get a stable power source, it is suggested to use a 0.5W zener diode and place it as close to the VBAT_BB/RF pins as possible to increase voltage surge withstand capability. The following figure shows the star structure of the power supply.

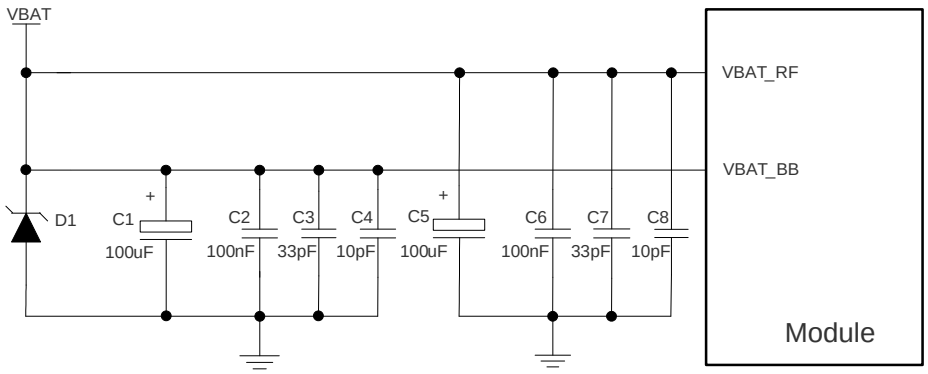


**Figure 4: Star Structure of the Power Supply**

### 3.4.3. Reference Design for Power Supply

The power design for the module is very important, as the performance of module largely depends on the power source. The power supply of SC20 should be able to provide sufficient current up to 3A at least. If the voltage drop between the input and output is not too high, it is suggested to use an LDO to supply power for the module. If there is a big voltage difference between the input source and the desired output (VBAT), a buck converter is preferred to be used as the power supply.

The following figure shows a reference design for +5V input power source which adopts an LDO (MIC29302WU) from MICREL. The typical output voltage is 3.8V and the maximum load current is 3.0A.

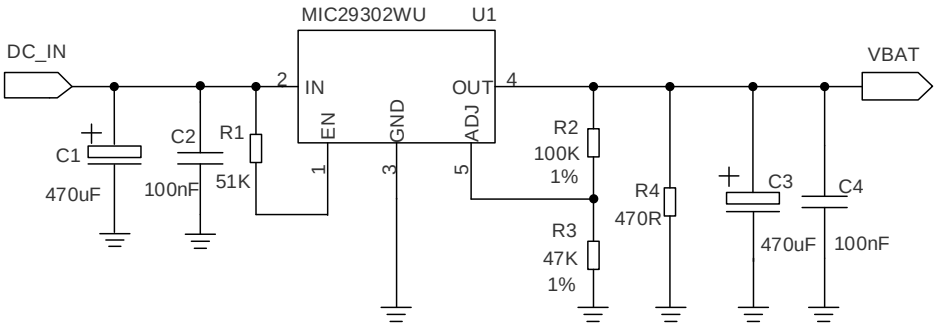


**Figure 5: Reference Circuit of Power Supply**

**NOTES**

1. It is suggested that customers should switch off the power supply for module in abnormal state, and then switch on the power to restart the module.
2. The module supports battery charging function by default. If the above power supply design is adopted, please make sure the charging function is disabled by software or connect VBAT to Schottky diode in series to avoid the reverse current to the power supply chip.

## 3.5. Turn on and off Scenarios

### 3.5.1. Turn on Module Using the PWRKEY

The module can be turned on by driving PWRKEY pin to a low level for at least 1.6s. PWRKEY pin is pulled to 1.8V internally. It is recommended to use an open drain/collector driver to control the PWRKEY. A simple reference circuit is illustrated in the following figure.

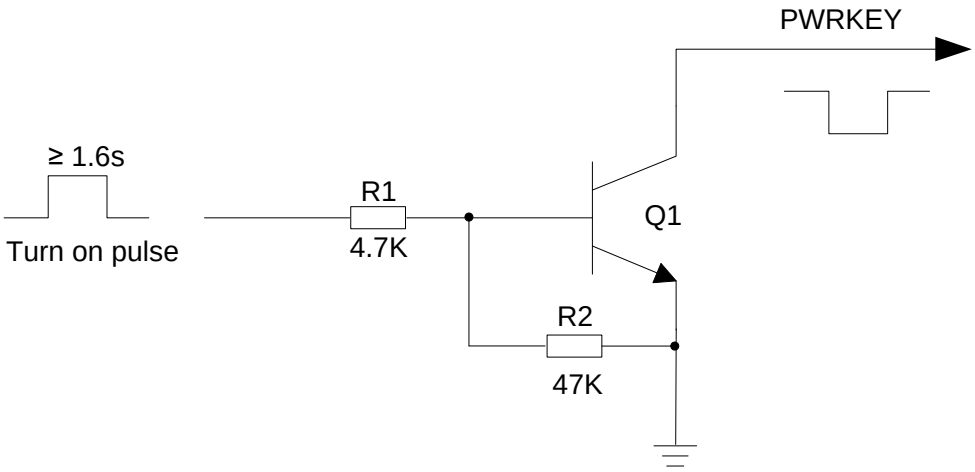


**Figure 6: Turn on the Module Using Driving Circuit**

The other way to control the PWRKEY is using a button directly. A TVS component is indispensable to be placed nearby the button for ESD protection. A reference circuit is shown in the following figure.

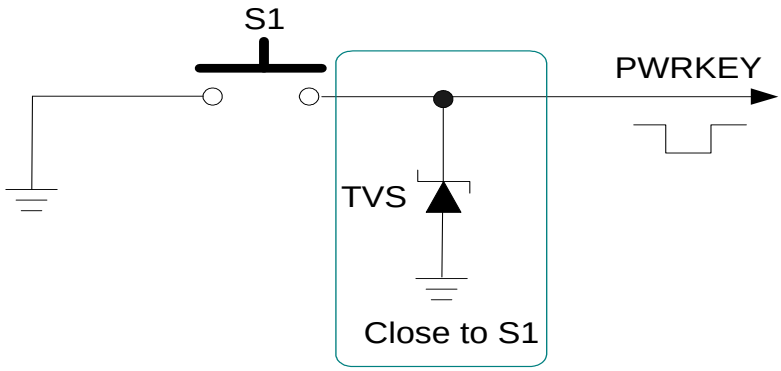


**Figure 7: Turn on the Module Using Keystroke**

The turning on scenario is illustrated in the following figure.

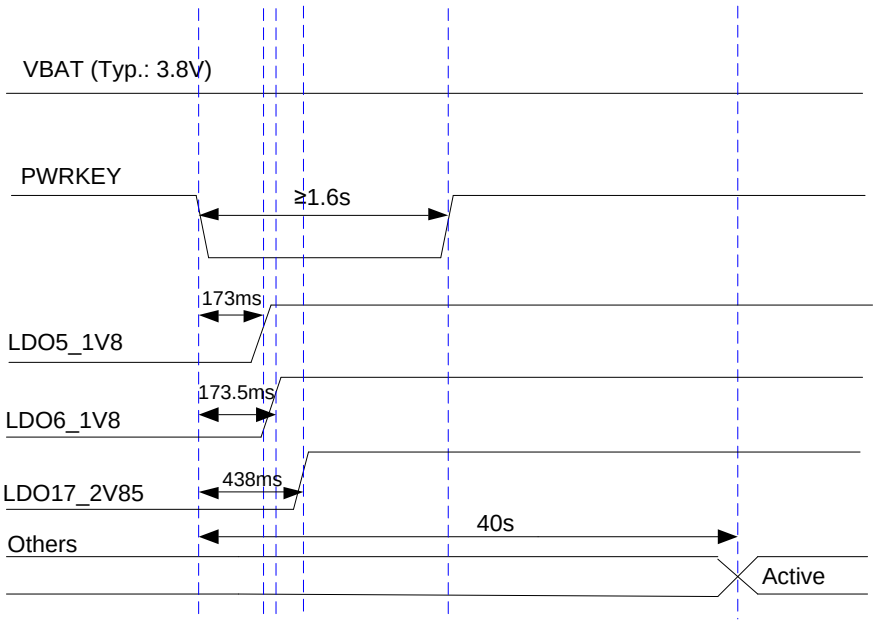


**Figure 8: Timing of Turning on Module**

**NOTES**

1. When the module is powered on for the first time, its timing of turning on will be 45ms longer than that shown above.
2. Make sure that VBAT is stable before pulling down PWRKEY pin. The recommended time between them is no less than 30ms. PWRKEY pin cannot be pulled down all the time.

### 3.5.2. Turn off Module

Set the PWRKEY pin low for at least 1s, and then choose to turn off the module when the prompt window comes up.

The other way to turn off the module is to drive PWRKEY to a low level for at least 8s. The module will execute forced shutdown. The forced power-down scenario is illustrated in the following figure.

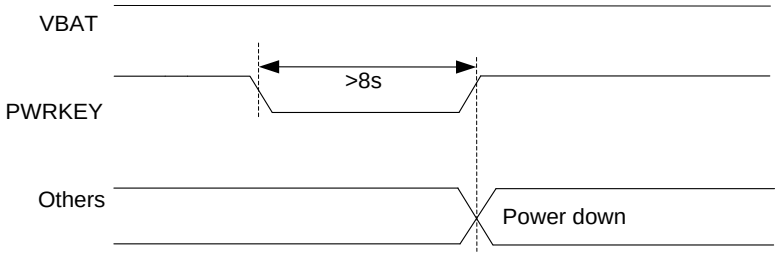


**Figure 9: Timing of Turning off Module**

## 3.6. VRTC Interface

The RTC (Real Time Clock) can be powered by an external power source through VRTC when the module is powered down and there is no power supply for the VBAT. The external power source can be capacitor or rechargeable battery (such as coil cells) according to application demands. The following are some reference circuit designs when an external battery or capacitor is utilized for powering RTC.

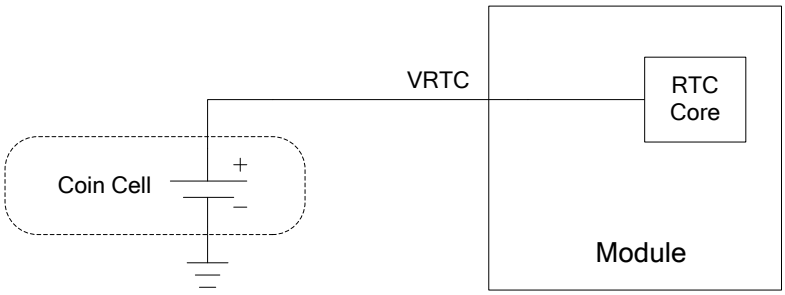


**Figure 10: RTC Powered by Coin Cell**

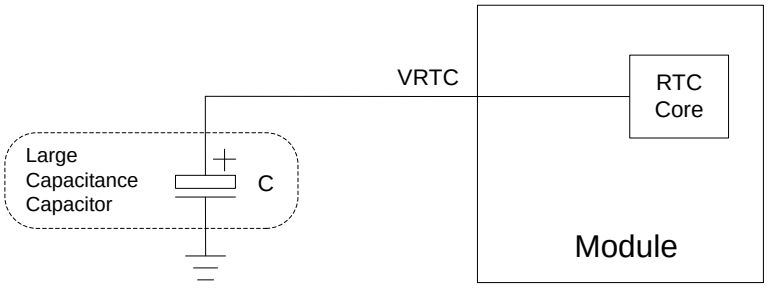


**Figure 11: RTC Powered by Capacitor**

If RTC is ineffective, it can be synchronized through network after the module is powered on.

- 2.0V~3.25V input voltage range and 3.0V typical value for VRTC. When VBAT is disconnected, the average consumption is about 5uA.
- When powered by VBAT, the RTC error is 50ppm. When powered by VRTC, the RTC error is 200ppm.
- If the rechargeable battery is used, the ESR of the battery should be less than 2K, and it is recommended to use the MS621FE FL11E of SEIKO.
- If large capacitance capacitor is selected, it is recommended to use a 100uF capacitor with low ESR. The capacitor will be able to power the real-time clock for 45 seconds.

## 3.7. Power Output

SC20 supports output of regulated voltages for peripheral circuits. During application, it is recommended to use parallel capacitors (33pF and 10pF) in the circuit to suppress high frequency noise.

**Table 9: Power Description**

| Pin Name | Default Voltage (V) | Driving Current (mA) | IDLE |
|---|---|---|---|
| LDO5_1V8 | 1.8 | 20 | KEEP |
| LDO6_1V8 | 1.8 | 100 | / |
| LDO17_2V85 | 2.85 | 300 | / |
| SD_LDO12 | 2.95 | 50 | / |
| SD_LDO11 | 2.95 | 600 | / |
| USIM1_VDD | 1.80/2.95 | 50 | |
| USIM2_VDD | 1.80/2.95 | 50 | |

## 3.8. Battery Charge and Management

SC20 module can recharge batteries. The battery charger in SC20 module supports trickle charging, constant current charging and constant voltage charging modes, which optimize the charging procedure for Li-ion batteries.

- **Trickle charging:** There are two steps in this mode. When the battery voltage is below 2.8V, a 90mA trickle charging current is applied to the battery. When the battery voltage is charged up and is between 2.8V and 3.2V, the charging current can be set to 450mA maximally.
- **Constant current mode (CC mode):** When the battery is increased to between 3.2V and 4.2V, the system will switch to CC mode. The maximum charging current is 1.44A when adapter is used for battery charging; and the maximum charging current is 450mA while USB charging.
- **Constant voltage mode (CV mode):** When the battery voltage reaches the final value 4.2V, the system will switch to CV mode and the charging current will decrease gradually. When the battery level reaches 100%, the charging is completed.

SC20 module supports battery temperature detection in the condition that the battery integrates a thermistor (47K 1% NTC thermistor with B-constant of 4050K by default; SDNT1608X473F4050FTF of SUNLORD is recommended) and the thermistor is connected to VBAT_THERM pin. The default battery temperature range is -3.0°C~48.5°C. If VBAT_THERM pin is not connected, there will be malfunctions such as battery charging failure, battery level display error, etc.

A reference design for battery charging circuit is shown as below.

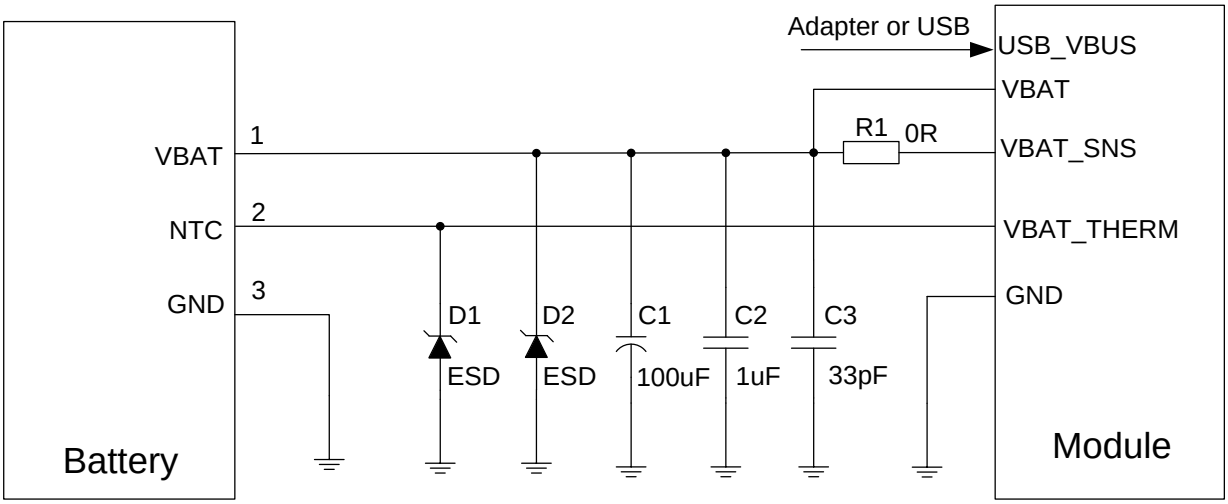


**Figure 12: Reference Design for Battery Charging Circuit**

Mobile devices such as mobile phones and handheld POS systems are powered by batteries. When different batteries are utilized, the charging and discharging curve has to be modified correspondingly so as to achieve the best effect.

If thermistor is not available in the battery, or adapter is utilized for powering module, then there is only need for VBAT and GND connection. In this case, the system may mistakenly judge that the battery temperature is abnormal, which will cause battery charging failure. In order to avoid this, VBAT_THERM should be connected to GND via a 47KΩ resistor. If VBAT_THERM is unconnected, the system will be unable to detect the battery, making battery cannot be charged.

VBAT_SNS pin must be connected. Otherwise, the module will have abnormalities in voltage detection, as well as associated power on/off and battery charging and discharging issues.

## 3.9. USB Interface

SC20 contains one integrated Universal Serial Bus (USB) interface which complies with the USB 2.0 specification and supports high speed (480Mbps) and full speed (12Mbps) modes. The USB interface is used for AT command communication, data transmission, software debugging and firmware upgrade.

The following table shows the pin definition of USB interface.

**Table 10: Pin Definition of USB Interface**

| Pin Name | Pin No. | I/O | Description | Comment |
|---|---|---|---|---|
| USB_VBUS | 141, 142 | PI | USB power supply | 4.35V~6.3V.<br>Typical 5.0V. |
| USB_DM | 13 | IO | USB differential data bus (minus) | Require differential impedance of 90Ω |
| USB_DP | 14 | IO | USB differential data bus (plus) | |
| USB_ID | 16 | AI | USB ID detection | High level by default |

USB_VBUS can be powered by USB power or adapter. It can also be used for detecting USB connection, as well as for battery charging via the internal PMU. The input voltage of power supply ranges from 4.35 to 6.3V, and the typical value is 5V. SC20 module supports charging management for a single Li-ion battery, but varied charging parameters should be set for batteries with varied models or capacities. The module is available a built-in linear-charging circuit which supports maximally 1.44A charging current.

The following are two USB interface reference designs for customers to choose from.

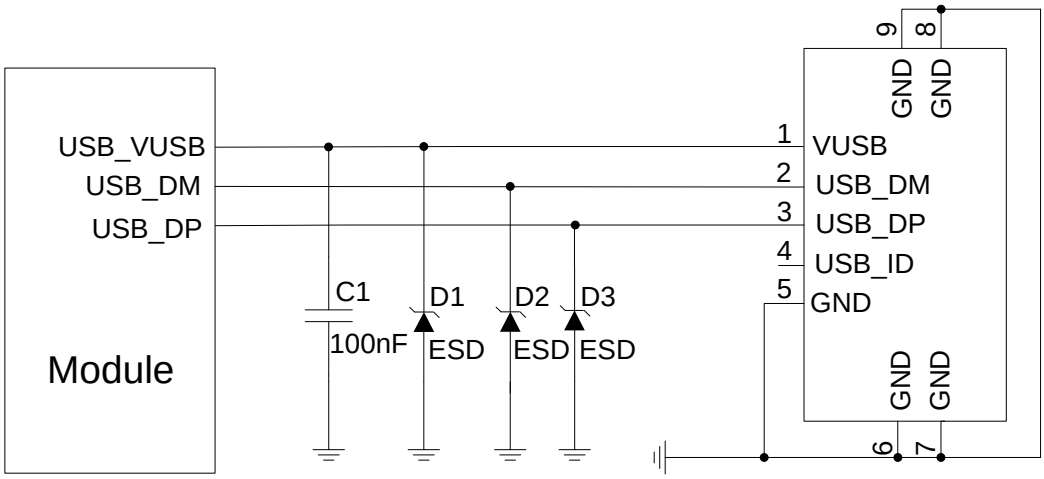


**Figure 13: USB Interface Reference Design (OTG is not Supported)**

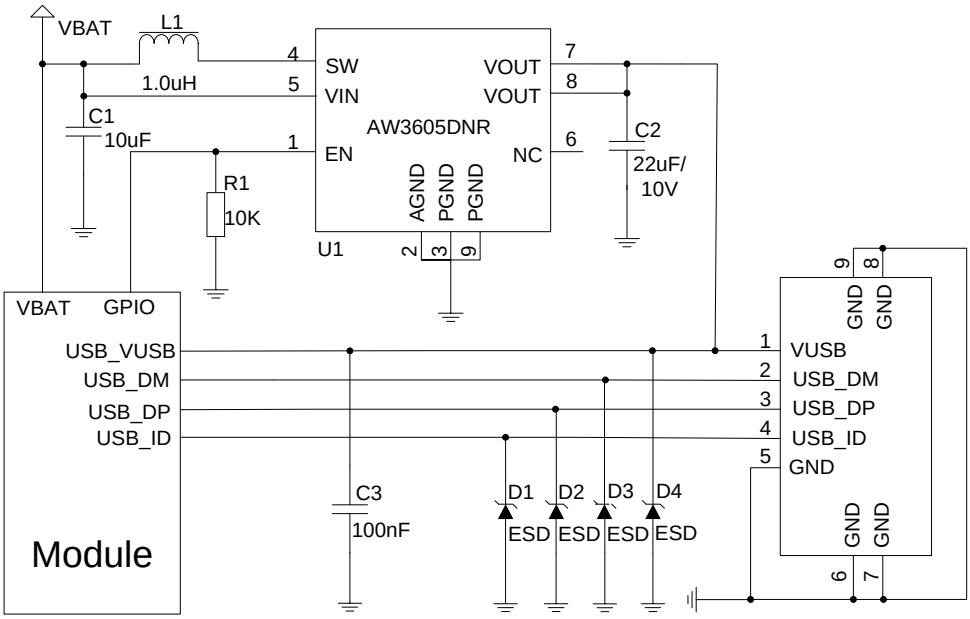


**Figure 14: USB Interface Reference Design (OTG is Supported)**

SC20 supports OTG protocol. If OTG function is needed, please refer to the above figure for the reference design. AW3605DNR is a high efficiency DC-DC chip manufactured by AWINIC, and customers can choose according to their own demands.

In order to ensure USB performance, please comply with the following principles while designing USB interface.

- It is important to route the USB signal traces as differential pairs with total grounding. The impedance

of USB differential trace is 90Ω.

- Keep the ESD protection devices as close as possible to the USB connector. Pay attention to the influence of junction capacitance of ESD protection devices on USB data lines. Typically, the capacitance value should be less than 2pF.
- Do not route signal traces under crystals, oscillators, magnetic devices and RF signal traces. It is important to route the USB differential traces in inner-layer with ground shielding on not only upper and lower layer but also right and left sides.
- Make sure the trace length difference between USB_DM and USB_DP is not exceeding 6.6mm.

**Table 11: USB Trace Length Inside the Module**

| PIN | Signal | Length (mm) | Length Difference (DP-DM) |
|---|---|---|---|
| 13 | USB_DM | 29.43 | -0.07 |
| 14 | USB_DP | 29.36 | |

## 3.10. UART Interfaces

The module provides two UART interfaces:

- **UART1:** 4-wire UART interface which supports hardware flow control
- **UART2:** 2-wire UART interface and is used for debugging

**Table 12: Pin Definition of UART Interfaces**

| Pin Name | Pin No | I/O | Description | Comment |
|---|---|---|---|---|
| UART1_TX | 34 | DO | UART1 transmit data | 1.8V power domain.<br>If it is unused, keep it open. |
| UART1_RX | 35 | DI | UART1 receive data | 1.8V power domain.<br>If it is unused, keep it open. |
| UART1_CTS | 36 | DI | UART1 clear to send | 1.8V power domain.<br>If it is unused, keep it open. |
| UART1_RTS | 37 | DO | UART1 request to send | 1.8V power domain.<br>If it is unused, keep it open. |
| UART2_RX | 93 | DI | UART2 receive data.<br>Debug port by default. | 1.8V power domain.<br>If it is unused, keep it open. |
| UART2_TX | 94 | DO | UART2 transmit data.<br>Debug port by default. | 1.8V power domain.<br>If it is unused, keep it open. |

UART1 provides 1.8V logic level. A level translator should be used if customers' application is equipped with a 3.3V UART interface. A level translator TXS0104PWR provided by *Texas Instruments* is recommended. The following figure shows the reference design.

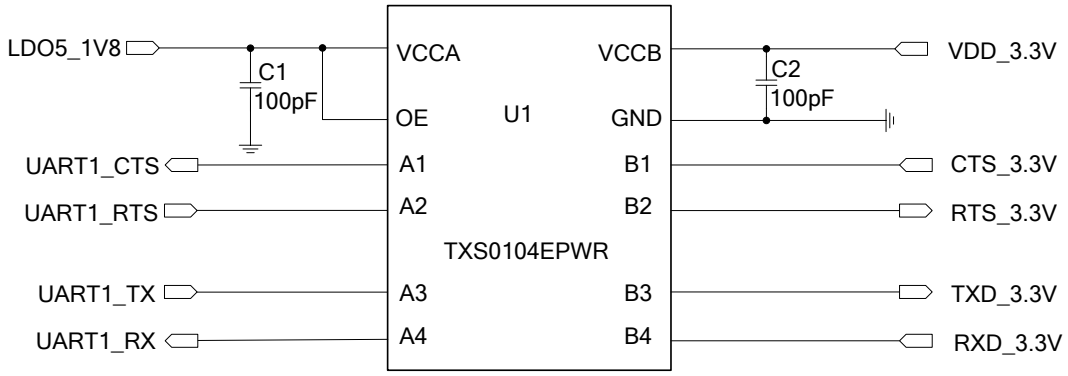


**Figure 15: Reference Circuit with Level Translator Chip (for UART1)**

The following figure is an example of connection between SC20 and PC. A voltage level translator and a RS-232 level translator chip are also recommended to be added between the module and PC, as these two UART interfaces do not support the RS-232 level, while support the 1.8V CMOS level only.

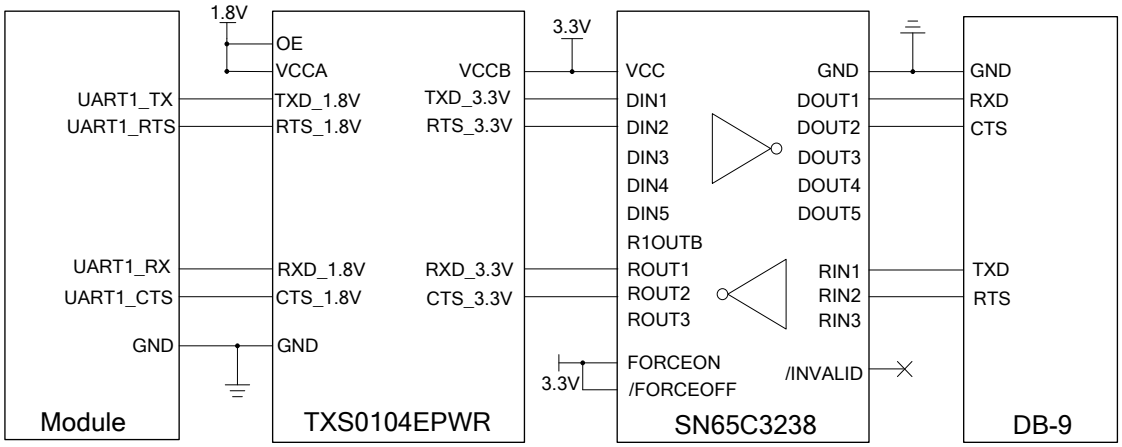


**Figure 16: RS-232 Level Match Circuit (for UART1)**

**NOTE**

UART2 is similar to UART1. Please refer to UART1 reference circuit designs for UART2's.

## 3.11. (U)SIM Interfaces

SC20 provides 2 (U)SIM interfaces which circuitry meet ETSI and IMT-2000 requirements. Dual SIM Card Dual Standby is supported by default. Both 1.8V and 2.95V (U)SIM cards are supported, and the (U)SIM card interfaces are powered by the internal power supply of SC20 module.

**Table 13: Pin Definition of (U)SIM Interfaces**

| Pin Name | Pin No | I/O | Description | Comment |
|---|---|---|---|---|
| USIM2_DETECT | 17 | DI | (U)SIM2 card hot-plug detection | Active Low. External pull-up resistor is required.<br>If unused, keep this pin open. |
| USIM2_RST | 18 | DO | (U)SIM2 card reset signal | |
| USIM2_CLK | 19 | DO | (U)SIM2 card clock signal | |
| USIM2_DATA | 20 | IO | (U)SIM2 card data signal | Pull-up to USIM2_VDD with a 10K resistor. |
| USIM2_VDD | 21 | PO | (U)SIM2 card power supply | Either 1.8V or 2.95V (U)SIM card is supported by the module automatically. |
| USIM1_DETECT | 22 | DI | (U)SIM1 card hot-plug detection | Active low. External pull-up resistor is required.<br>If unused, keep this pin open. |
| USIM1_RST | 23 | DO | (U)SIM1 card reset signal | |
| USIM1_CLK | 24 | DO | (U)SIM1 card clock signal | |
| USIM1_DATA | 25 | IO | (U)SIM1 card data signal | Pull-up to USIM1_VDD with a 10K resistor. |
| USIM1_VDD | 26 | PO | (U)SIM1 card power supply | Either 1.8V or 2.95V (U)SIM card is supported by the module automatically. |

SC20 supports (U)SIM card hot-plug via the USIM_DETECT pin. A reference circuit for (U)SIM interface with an 8-pin (U)SIM card connector is shown below.

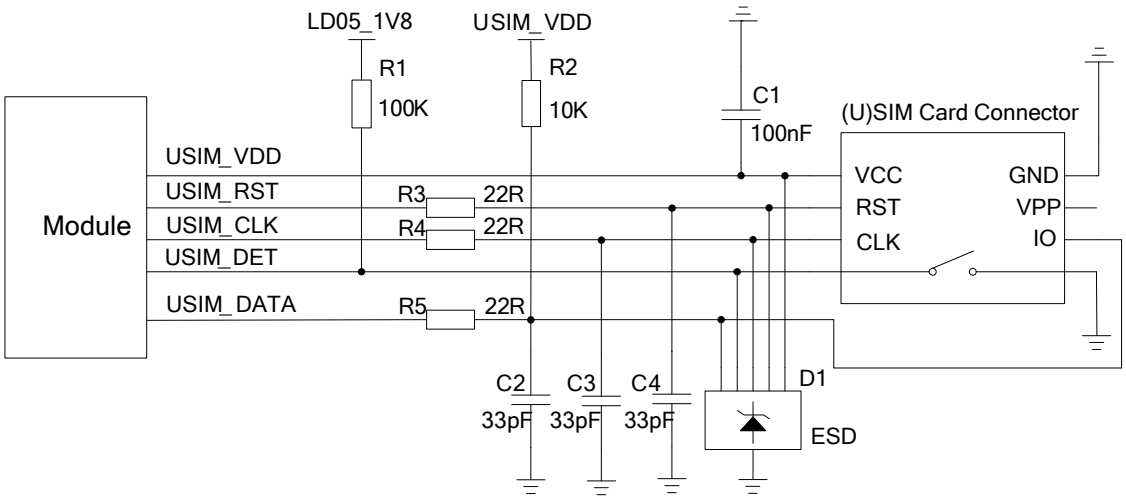


**Figure 17: Reference Circuit for (U)SIM Interface with an 8-pin (U)SIM Card Connector**

If there is no need to use USIM_DETECT, please keep it open. The following is a reference circuit for (U)SIM interface with a 6-pin (U)SIM card connector.

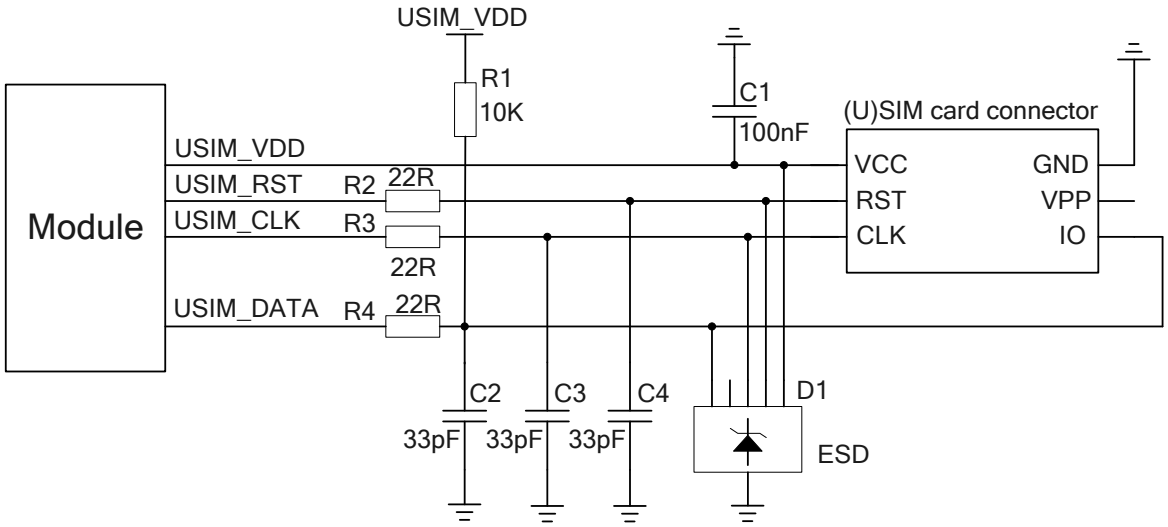


**Figure 18: Reference Circuit for (U)SIM Interface with a 6-pin (U)SIM Card Connector**

In order to ensure good performance and avoid damage of (U)SIM cards, please follow the criteria below in (U)SIM circuit design:

- Keep placement of (U)SIM card connector as close to the module as possible. Keep the trace length of (U)SIM card signals as less than 200mm as possible.
- Keep (U)SIM card signals away from RF and VBAT traces.
- A 100nF filter capacitor shall be reserved for USIM_VDD, and its maximum capacitance should not exceed 1uF. The capacitor should be placed near to (U)SIM card.
- To avoid cross-talk between USIM_DATA and USIM_CLK, keep them away from each other and shield them with ground. USIM_RST also needs ground protection.

- In order to offer good ESD protection, it is recommended to add a TVS diode array with parasitic capacitance not exceeding 50pF. The 22Ω resistors should be added in series between the module and (U)SIM card so as to suppress EMI spurious transmission and enhance ESD protection. Please note that the (U)SIM peripheral circuit should be close to the (U)SIM card connector.
- The 33pF capacitors should be added in parallel on USIM_DATA, USIM_CLK and USIM_RST signal lines so as to filter RF interference, and they should be placed as close to the (U)SIM card connector as possible.

## 3.12. SD Card Interface

SC20 module supports SD cards with 4-bit data interfaces or SDIO devices. The pin definition of the SD card interface is shown below.

**Table 14: Pin Definition of SD Card Interface**

| Pin Name | Pin No | I/O | Description | Comment |
|---|---|---|---|---|
| SD_LDO11 | 38 | PO | Power supply for SD card | Vnorm=2.95V<br>$I_O$max=600mA |
| SD_LDO12 | 32 | PO | 1.8V/2.95V output power supply | Support 1.8V or 2.95V power supply.<br>The maximum drive current is 50mA. |
| SD_CLK | 39 | DO | High speed digital clock signal of SD card | Control characteristic impedance as 50Ω. |
| SD_CMD | 40 | I/O | Command signal of SD card | |
| SD_DATA0 | 41 | I/O | High speed bidirectional digital signal lines of SD card | |
| SD_DATA1 | 42 | I/O | | |
| SD_DATA2 | 43 | I/O | | |
| SD_DATA3 | 44 | I/O | | |
| SD_DET | 45 | DI | SD card insertion detection | Active low |

A reference circuit for SD card interface is shown as below.

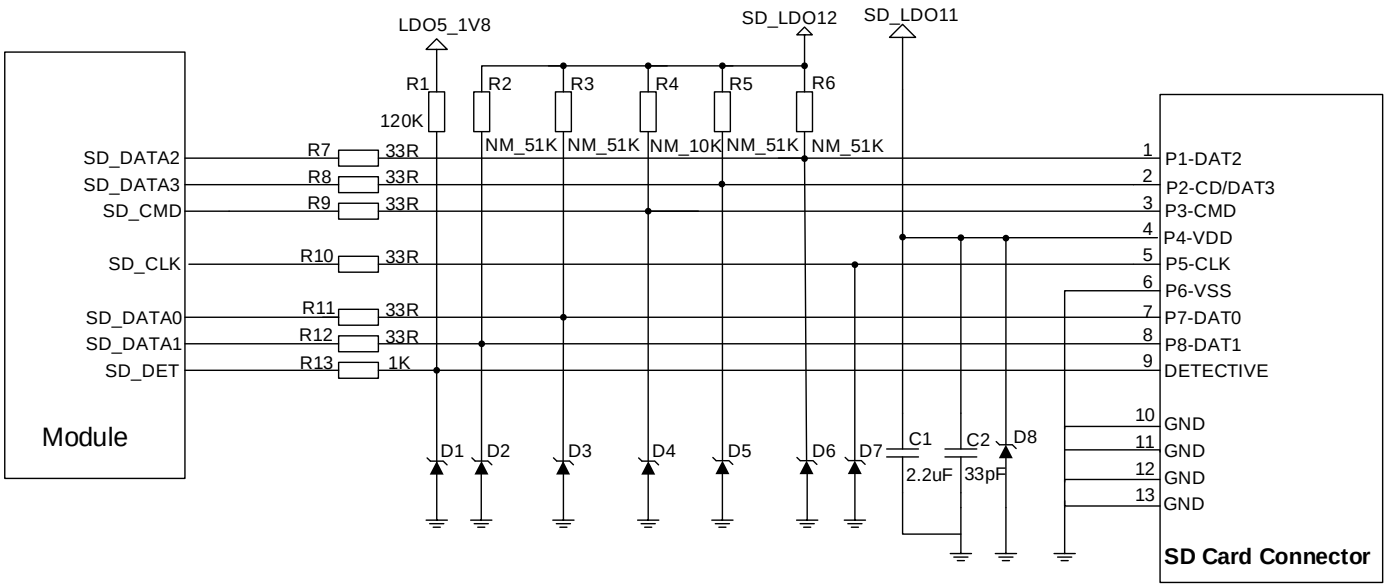


**Figure 19: Reference Circuit for SD Card Interface**

SD_LDO11 is a peripheral driver power supply for SD card. The maximum drive current is approx. 600mA. Because of the high drive current, it is recommended that the trace width is 0.6mm or more. In order to ensure the stability of drive power, a 2.2uF capacitor should be added in parallel near the SD card connector.

CMD, CLK, DATA0, DATA1, DATA2 and DATA3 are all high-speed signal lines. In PCB design, please control the characteristic impedance of them to 50Ω, and do not cross with other traces. It is recommended to route the trace on the inner layer of PCB, and keep the same trace length for CLK, CMD, DATA0, DATA1, DATA2 and DATA3. CLK additionally needs ground shielding.

Layout guidelines:

- Control impedance as 50Ω±10%, and ground shielding is required.
- The total trace length difference between CLK and other signal line traces should not exceed 1mm.

**Table 15: SD Card Trace Length Inside the Module**

| Pin No. | Signal | Length (mm) | Comment |
|---|---|---|---|
| 39 | SD_CLK | 14.60 | |
| 40 | SD_CMD | 14.55 | |
| 41 | SD_DATA0 | 14.53 | |
| 42 | SD_DATA1 | 14.56 | |

| | | |
|---|---|---|
| 43 | SD_DATA2 | 14.53 |
| 44 | SD_DATA3 | 14.57 |

## 3.13. GPIO Interfaces

SC20 has abundant GPIO interfaces with logic level of 1.8V. The pin definition is listed below.

**Table 16: Pin Definition of GPIO Interfaces**

| PIN | Pin Name | GPIO | Default state | Comment |
|---|---|---|---|---|
| 30 | TP_INT | GPIO_13 | B-PD: nppukp [1)] | Wakeup [2)] |
| 31 | TP_RST | GPIO_12 | B-PD: nppukp | Wakeup |
| 33 | GPIO_23 | GPIO_23 | B-PD: nppukp | |
| 34 | UART1_TX | GPIO_20 | B-PD: nppukp | Wakeup |
| 35 | UART1_RX | GPIO_21 | B-PD: nppukp | UART1_RX Wakeup |
| 36 | UART1_CTS | GPIO_111 | B-PD: nppukp | Wakeup |
| 37 | UART1_RTS | GPIO_112 | B-PD: nppukp | Wakeup |
| 45 | SD_DET | GPIO_38 | B-PD: nppukp | Wakeup |
| 47 | TP_I2C_SCL | GPIO_19 | B-PD: nppukp | |
| 48 | TP_I2C_SDA | GPIO_18 | B-PD: nppukp | |
| 49 | LCD_RST | GPIO_25 | B-PD: nppukp | Wakeup |
| 50 | LCD_TE | GPIO_24 | B-PD: nppukp | |
| 74 | CAM0_CLK | GPIO_26 | B-PD: nppukp | |
| 75 | CAM1_CLK | GPIO_27 | B-PD: nppukp | |
| 79 | CAM0_RST | GPIO_35 | B-PD: nppukp | Wakeup |
| 80 | CAM0_PWD | GPIO_34 | B-PD: nppukp | Wakeup |
| 81 | CAM1_RST | GPIO_28 | B-PD: nppukp | Wakeup |

| | | | | |
|---|---|---|---|---|
| 82 | CAM1_PWD | GPIO_33 | B-PD: nppukp | |
| 83 | CAM_I2C_SCL | GPIO_30 | B-PD: nppukp | |
| 84 | CAM_I2C_SDA | GPIO_29 | B-PD: nppukp | |
| 90 | GPIO_32 | GPIO_32 | B-PD: nppukp | |
| 91 | SENSOR_I2C_SCL | GPIO_7 | B-PD: nppukp | |
| 92 | SENSOR_I2C_SDA | GPIO_6 | B-PD: nppukp | |
| 93 | UART2_RX | GPIO_5 | B-PD: nppukp | Wakeup |
| 94 | UART2_TX | GPIO_4 | B-PD: nppukp | |
| 95 | KEY_VOL_UP | GPIO_90 | B-PD: nppukp | Wakeup |
| 96 | KEY_VOL_DOWN | GPIO_91 | B-PD: nppukp | Wakeup |
| 97 | GPIO_31 | GPIO_31 | B-PD: nppukp | Wakeup |
| 98 | GPIO_92 | GPIO_92 | B-PD: nppukp | Wakeup |
| 99 | GPIO_88 [3)] | GPIO_88 [3)] | B-PD: nppukp | |
| 100 | GPIO_89 | GPIO_89 | B-PD: nppukp | |
| 101 | GPIO_69 | GPIO_69 | B-PD: nppukp | |
| 102 | GPIO_68 [3)] | GPIO_68 [3)] | B-PD: nppukp | |
| 103 | GPIO_97 | GPIO_97 | B-PD: nppukp | Wakeup |
| 104 | GPIO_110 | GPIO_110 | B-PD: nppukp | Wakeup |
| 105 | GPIO_0 | GPIO_0 | B-PD: nppukp | |
| 106 | GPIO_98 | GPIO_98 | B-PD: nppukp | Wakeup |
| 107 | GPIO_94 | GPIO_94 | B-PD: nppukp | Wakeup |
| 108 | GPIO_36 | GPIO_36 | B-PD: nppukp | Wakeup |
| 109 | GPIO_65 | GPIO_65 | B-PD: nppukp | Wakeup |
| 110 | GPIO_96 | GPIO_96 | B-PD: nppukp | Wakeup |
| 112 | GPIO_58 | GPIO_58 | B-PD: nppukp | Wakeup |

| | | | | |
|---|---|---|---|---|
| 113 | GPIO_99 | GPIO_99 | B-PD: nppukp | |
| 115 | GPIO_95 | GPIO_95 | B-PD: nppukp | Wakeup |
| 116 | GPIO_11 | GPIO_11 | B-PD: nppukp | Wakeup |
| 117 | GPIO_10 | GPIO_10 | B-PD: nppukp | |
| 118 | GPIO_9 | GPIO_9 | B-PD: nppukp | |
| 119 | GPIO_8 | GPIO_8 | B-PD: nppukp | |
| 123 | GPIO_16 | GPIO_16 | B-PD: nppukp | |
| 124 | GPIO_17 | GPIO_17 | B-PD: nppukp | |

**NOTES**

1. [1] B: Bidirectional digital with CMOS input. PD: nppukp=default pull-down with programmable options following the colon (:).
2. [2] Wakeup: interrupt pins that can wake up the system.
3. [3] GPIO_68 and GPIO_88 cannot be pulled up during start-up.

## 3.14. SPI Interface

SC20 module provide one SPI interface multiplexed from GPIO interfaces. The interface only supports the master mode.

**Table 17: Pin Definition of SPI Interface**

| Pin Name | Pin No | I/O | Description | Comment |
|---|---|---|---|---|
| GPIO_8 | 119 | IO | GPIO by default.<br>Can be multiplexed into SPI_MOSI. | Master out slave in of SPI |
| GPIO_9 | 118 | IO | GPIO by default.<br>Can be multiplexed into SPI_MISO. | Master in slave out of SPI |
| GPIO_10 | 117 | DO | GPIO by default.<br>Can be multiplexed into SPI_CS_N. | SPI chip select |
| GPIO_11 | 116 | DO | GPIO by default.<br>Can be multiplexed into SPI_CLK. | SPI clock |

## 3.15. I2C Interfaces

SC20 module provides three I2C interfaces which only support the master mode. As an open drain output, the I2C interfaces need a pull-up resistor on its external circuit, and the recommended logic level is 1.8V.

**Table 18: Pin Definition of I2C Interfaces**

| Pin Name | Pin No | I/O | Description | Comment |
|---|---|---|---|---|
| TP_I2C_SCL | 47 | OD | I2C clock signal of touch panel | Used for touch panel |
| TP_I2C_SDA | 48 | OD | I2C data signal of touch panel | |
| CAM_I2C_SCL | 83 | OD | I2C clock signal of camera | Used for camera |
| CAM_I2C_SDA | 84 | OD | I2C data signal of camera | |
| SENSOR_I2C_SCL | 91 | OD | I2C clock signal for external sensor | Used for external sensor |
| SENSOR_I2C_SDA | 92 | OD | I2C data signal for external sensor | |

## 3.16. ADC Interfaces

SC20 module provides three analog-to-digital converter (ADC) interfaces, and the pin definition is shown below.

**Table 19: Pin Definition of ADC Interfaces**

| Pin Name | Pin No | I/O | Description | Comment |
|---|---|---|---|---|
| ADC | 128 | AI | General purpose ADC | Max input voltage is 1.7V |
| VBAT_SNS | 133 | AI | Input voltage sense | Max input voltage is 4.5V |
| VBAT_THERM | 134 | AI | Battery temperature detection | Internal pull-up; externally connect to GND with a 47K NTC thermistor |

The resolution of the ADC is up to 16 bits and the effective resolution is 12 bits.

**NOTE**

When the input voltage exceeds the maximum input voltage of VBAT_SNS pin, resistor divider cannot be used in the circuit design. Instead, general purpose ADC with resistor divider input can be used.

## 3.17. Motor Drive Interface

The pin of motor drive interface is listed below.

**Table 20: Pin Definition of Motor Drive Interface**

| Pin Name | Pin No | I/O | Description | Comment |
|---|---|---|---|---|
| VIB_DRV | 28 | PO | Motor drive | Connected to the negative terminal of the motor |

The motor is driven by an exclusive circuit, and a reference circuit design is shown below.

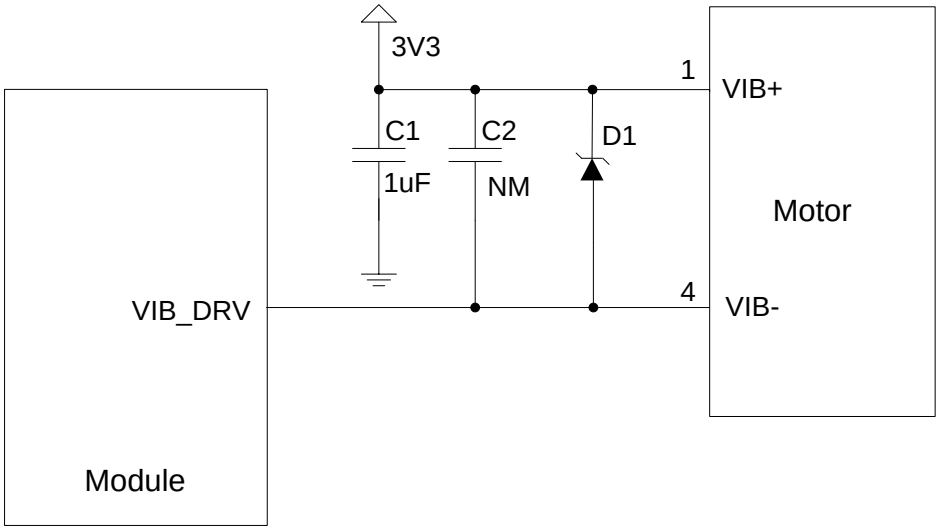


**Figure 20: Reference Circuit for Motor Connection**

When the motor stops, the redundant electricity can be discharged from the circuit loop formed by diodes, thus avoiding component damages.

## 3.18. LCM Interface

SC20 module provides an LCM interface meeting MIPI DSI specification. The interface supports high speed differential data transmission, with up to four lanes and a transmission rate up to 1.5Gbps per lane. It supports maximally 720P resolution displays.

**Table 21: Pin Definition of LCM Interface**

| Pin Name | Pin No | I/O | Description | Comment |
|---|---|---|---|---|
| LDO6_1V8 | 125 | PO | 1.8V output power supply for LCM logic circuit and DSI | 1.8V normal voltage. Vnorm=1.8V $I_O$max=100mA |
| LDO17_2V85 | 129 | PO | 2.85V output power supply for LCM analog circuits | 2.85V normal voltage. Vnorm=2.85V $I_O$max=300mA |
| PWM | 29 | DO | Adjust the backlight brightness. PWM control signal. | |
| LCD_RST | 49 | DO | LCD reset signal | Active low |
| LCD_TE | 50 | DI | LCD tearing effect signal | |
| MIPI_DSI_CLKN | 52 | AO | MIPI DSI clock signal (negative) | |
| MIPI_DSI_CLKP | 53 | AO | MIPI DSI clock signal (positive) | |
| MIPI_DSI_LN0N | 54 | AO | MIPI DSI data signal (negative) | |
| MIPI_DSI_LN0P | 55 | AO | MIPI DSI data signal (positive) | |
| MIPI_DSI_LN1N | 56 | AO | MIPI DSI data signal (negative) | |
| MIPI_DSI_LN1P | 57 | AO | MIPI DSI data signal (positive) | |
| MIPI_DSI_LN2N | 58 | AO | MIPI DSI data signal (negative) | |
| MIPI_DSI_LN2P | 59 | AO | MIPI DSI data signal (positive) | |
| MIPI_DSI_LN3N | 60 | AO | MIPI DSI data signal (negative) | |
| MIPI_DSI_LN3P | 61 | AO | MIPI DSI data signal (positive) | |

Four-lane MIPI DSI is needed for connection with 720P displays. The following is a reference circuit design, by taking the connection with LCM interface on LHR050H41-00 (IC: ILI9881C) from HUARUI Lighting as an example.

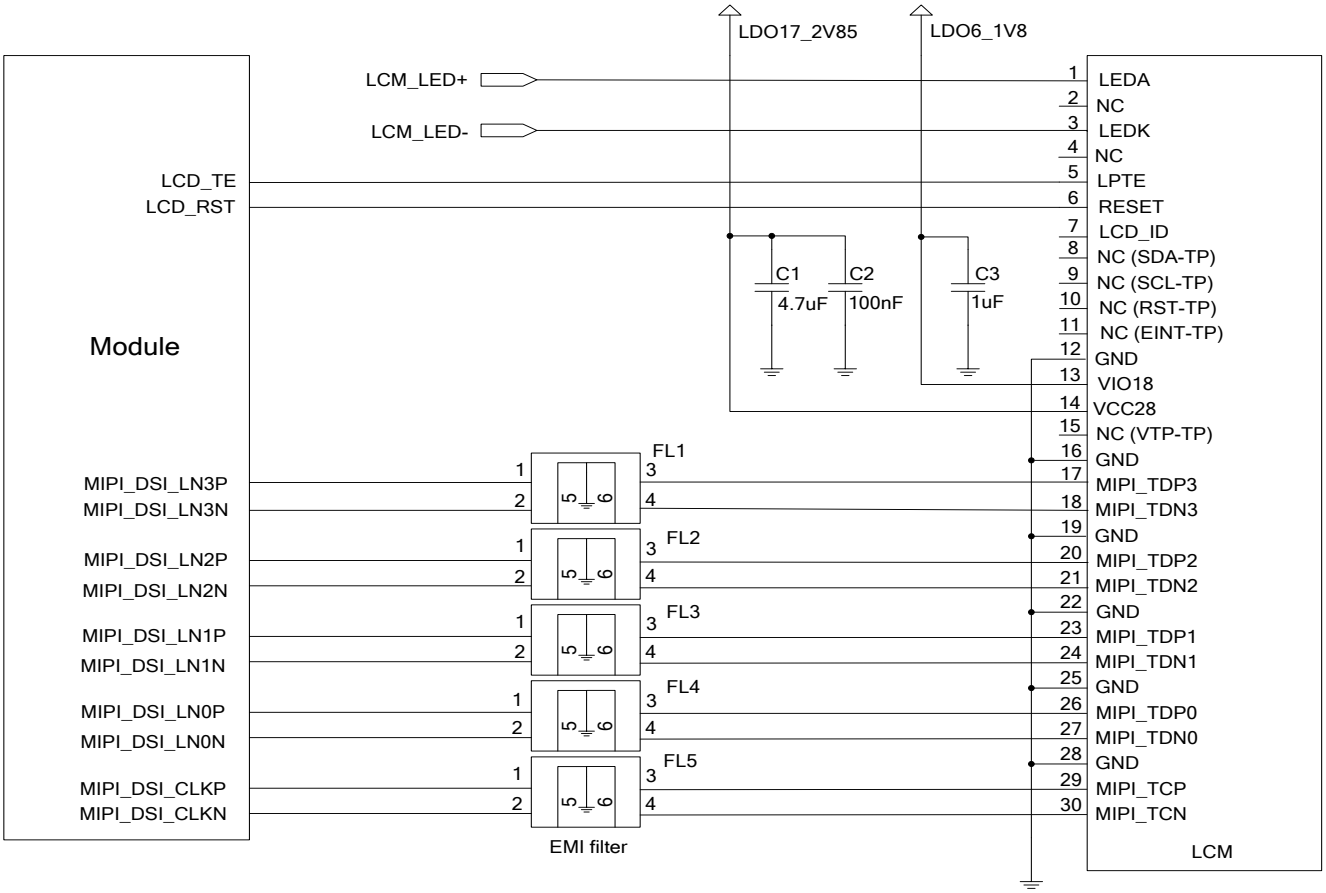


**Figure 21: Reference Circuit Design for LCM Interface**

MIPI are high speed signal lines. It is recommended that common-mode filters should be added in series near the LCM connector, so as to improve protection against electromagnetic radiation interference. ICMEF112P900MFR from ICT is recommended.

When compatible design with other displays is required, please connect the LCD_ID pin of LCM to the module's ADC pin, and please note that the output voltage of LCD_ID cannot exceed the voltage range of ADC pin.

External backlight driving circuit needs to be designed for LCM, and a reference circuit design is shown in the following figure. Backlight brightness adjustment can be realized by PWM pin of SC20 module through adjusting the duty ratio.

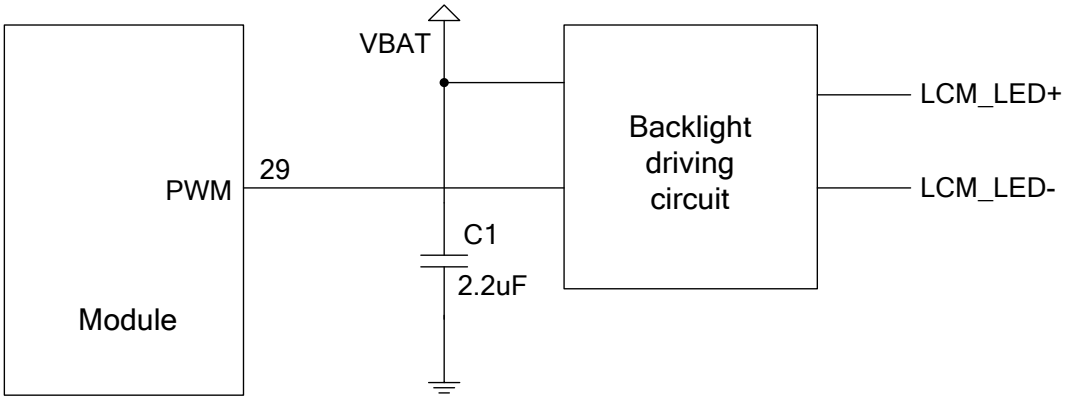


**Figure 22: Reference Design for External Backlight Driving Circuit**

## 3.19. Touch Panel Interface

SC20 provides a set of I2C interface for connection with Touch Panel (TP), and also provides the corresponding power supply and interrupt pins. The definition of TP interface pins is illustrated below.

**Table 22: Pin Definition of Touch Panel Interface**

| Pin Name | Pin No | I/O | Description | Comment |
|---|---|---|---|---|
| LDO6_1V8 | 125 | PO | 1.8V output power supply for TP I/O power | Pull-up power supply of I2C. 1.8V normal voltage |
| LDO17_2V85 | 129 | PO | 2.85V output power supply for TP VDD power | TP power supply. 2.85V normal voltage |
| TP_INT | 30 | DI | Interrupt signal of TP | |
| TP_RST | 31 | DO | Reset signal of TP | Active low |
| TP_I2C_SCL | 47 | OD | I2C clock signal of TP | |
| TP_I2C_SDA | 48 | OD | I2C data signal of TP | |

The following illustrates a TP interface reference circuit, by taking the connection with TP interface on LHR050H41-00 (IC: GT9147) from HUARUI Lighting as an example.

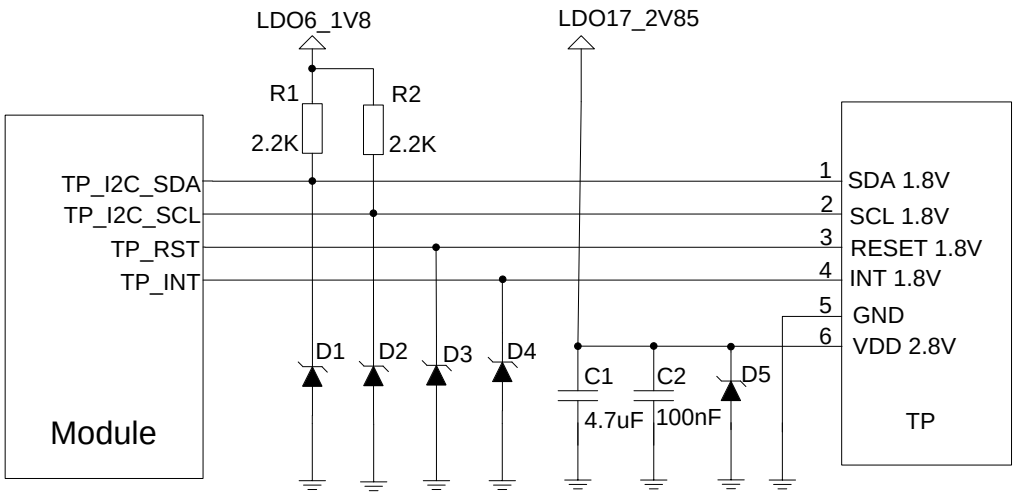


**Figure 23: Reference Circuit Design for TP Interface**

## 3.20. Camera Interfaces

Based on standard MIPI CSI video input interface, SC20 module supports two cameras, and the maximum pixel of the rear camera can be up to 8MP. The video and photo quality are determined by various factors such as the camera sensor, camera lens quality, etc. It is recommended to select a proper camera model, according to the specification of cameras verified and recommended by Quectel.

The following models of camera sensors have been verified by Quectel:

- For rear camera: Hi843 of SK Hynix, T4KA3 of TOSHIBA
- For front camera: Hi259 of SK Hynix, SP2508 of SuperPix

### 3.20.1. Rear Camera Interface

The rear camera realizes transmission and control via its FPC and a connector which is connected to the module. SC20 rear camera interface integrates a two-lane MIPI CSI for differential data transmission, and it maximally supports 8MP cameras.

The pin definition of rear camera interface is shown below.

**Table 23: Pin Definition of Rear Camera Interface**

| Pin Name | Pin No | I/O | Description | Comment |
|---|---|---|---|---|
| LDO6_1V8 | 125 | PO | 1.8V output power supply for DOVDD of camera | 1.8V normal voltage. Vnorm=1.8V |

| | | | | |
|---|---|---|---|---|
| | | | | $I_O$max=100mA |
| LDO17_2V85 | 129 | PO | 2.85V output power supply for AVDD of camera | 2.85V normal voltage.<br>Vnorm=2.85V<br>$I_O$max=300mA |
| MIPI_CSI0_CLKN | 63 | AI | MIPI CSI clock signal (negative) | |
| MIPI_CSI0_CLKP | 64 | AI | MIPI CSI clock signal (positive) | |
| MIPI_CSI0_LN0N | 65 | AI | MIPI CSI data signal (negative) | |
| MIPI_CSI0_LN0P | 66 | AI | MIPI CSI data signal (positive) | |
| MIPI_CSI0_LN1N | 67 | AI | MIPI CSI data signal (negative) | |
| MIPI_CSI0_LN1P | 68 | AI | MIPI CSI data signal (positive) | |
| CAM0_MCLK | 74 | DO | Clock signal of rear camera | |
| CAM0_RST | 79 | DO | Reset signal of rear camera | |
| CAM0_PWD | 80 | DO | Power down signal of rear camera | |
| CAM_I2C_SCL | 83 | OD | I2C clock signal of camera | |
| CAM_I2C_SDA | 84 | OD | I2C data signal of camera | |

The following is a reference circuit design for rear camera interface, by taking the connection with T4KA3 camera as an example.

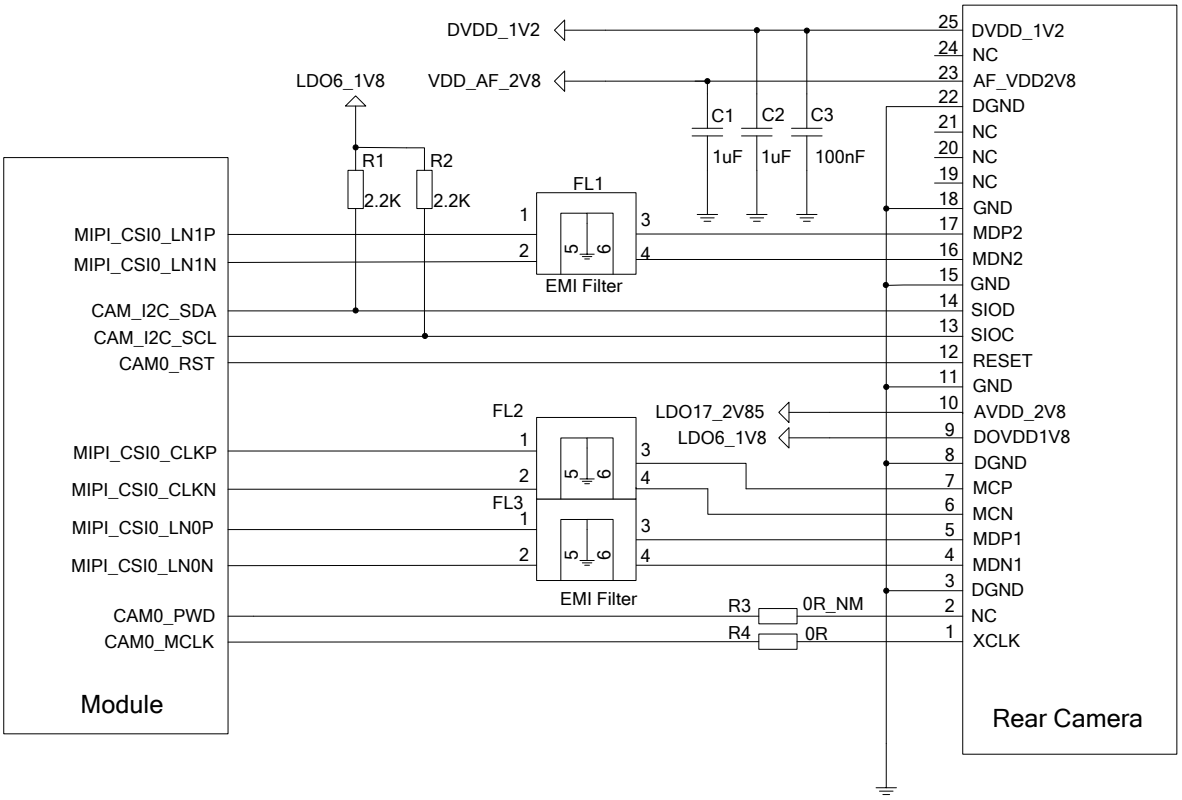


**Figure 24: Reference Circuit Design for Rear Camera Interface**

**NOTE**

DVDD_1V2 is used to power the rear camera core, and VDD_AF_2V8 is used to power the rear camera AF circuit. Both of them are powered by an external LDO.

### 3.20.2. Front Camera Interface

The front camera interface integrates a differential data interface meeting one-lane MIPI CSI standard, and is tested to support 2MP cameras.

The pin definition of front camera interface is shown below.

**Table 24: Pin Definition of Front Camera Interface**

| Pin Name | Pin No | I/O | Description | Comment |
|---|---|---|---|---|
| LDO6_1V8 | 125 | PO | 1.8V output power supply for DOVDD of camera | 1.8V normal voltage.<br>Vnorm=1.8V<br>$I_O$max=100mA |

| | | | | |
|---|---|---|---|---|
| LDO17_2V85 | 129 | PO | 2.85V output power supply for AVDD of camera | 2.85V normal voltage.<br>Vnorm=2.85V<br>$I_O$max=300mA |
| MIPI_CSI1_CLKN | 70 | AI | MIPI CSI clock signal (negative) | |
| MIPI_CSI1_CLKP | 71 | AI | MIPI CSI clock signal (positive) | |
| MIPI_CSI1_LN0N | 72 | AI | MIPI CSI data signal (negative) | |
| MIPI_CSI1_LN0P | 73 | AI | MIPI CSI data signal (positive) | |
| CAM1_MCLK | 75 | DO | Clock signal of front camera | |
| CAM1_RST | 81 | DO | Reset signal of front camera | |
| CAM1_PWD | 82 | DO | Power down signal of front camera | |
| CAM_I2C_SCL | 83 | OD | I2C clock signal of camera | |
| CAM_I2C_SDA | 84 | OD | I2C data signal of camera | |

The following is a reference circuit design for front camera interface, by taking the connection with SP2508 camera as an example.

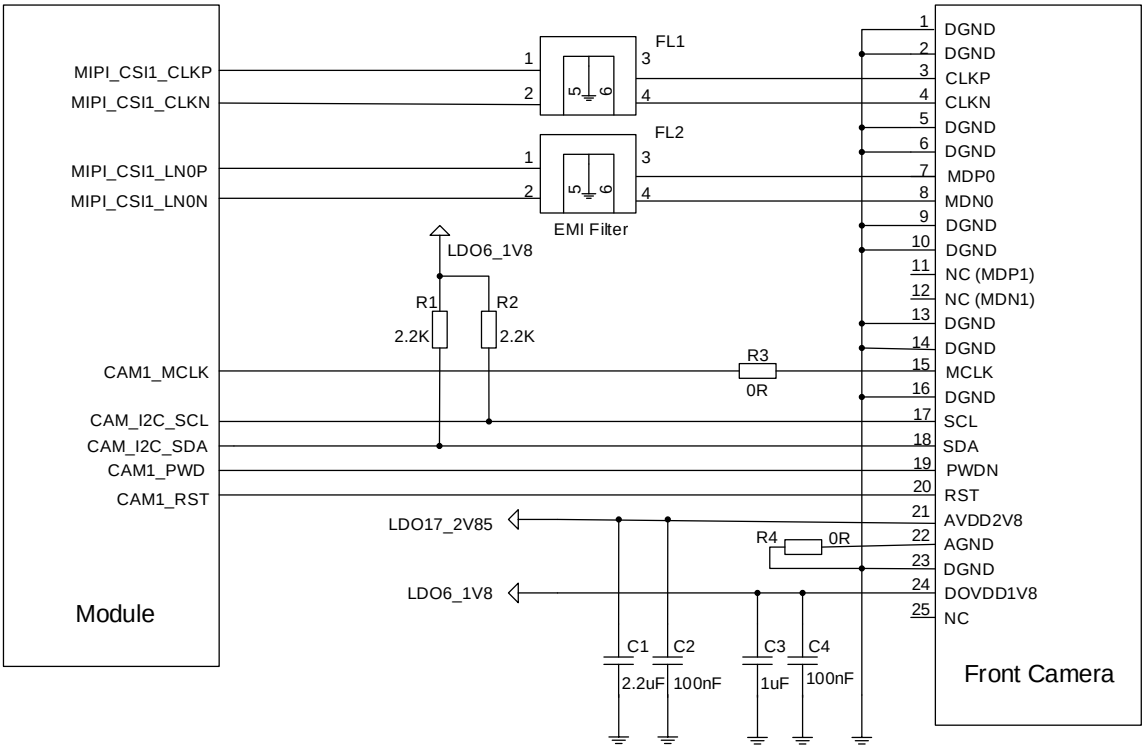


**Figure 25: Reference Circuit Design for Front Camera Interface**

### 3.20.3. Design Considerations

- Special attention should be paid to the definition of video device interface in schematic design. Different video devices will have varied definitions for their corresponding connectors. Assure the device and the connectors are correctly connected.
- MIPI are high speed signal lines, supporting maximum data rate up to 1.5Gbps. The differential impedance should be controlled as 100Ω. Additionally, it is recommended to route the trace on the inner layer of PCB, and do not cross it with other traces. For the same video device, all the MIPI traces should keep the same length. In order to avoid crosstalk, a distance of 1.5 times of the trace width is recommended to be maintained among MIPI signal lines. During impedance matching, do not connect GND on different planes so as to ensure impedance consistency.
- It is recommended to select a low capacitance TVS for ESD protection and the recommended parasitic capacitance is below 1pF.
- Route MIPI traces according to the following rules:
  a) The total trace length should not exceed 305mm;
  b) Control the differential impedance as 100Ω±10%;
  c) Control intra-lane length difference within 0.67mm;
  d) Control inter-lane length difference within 1.3mm.

**Table 25: MIPI Trace Length Inside the Module**

| PIN | Pin Name | Length (mm) | Length Difference (P-N) |
|---|---|---|---|
| 52 | MIPI_DSI_CLKN | 7.08 | -0.63 |
| 53 | MIPI_DSI_CLKP | 6.45 | |
| 54 | MIPI_DSI_LN0N | 6.15 | -0.30 |
| 55 | MIPI_DSI_LN0P | 5.85 | |
| 56 | MIPI_DSI_LN1N | 6.64 | -0.04 |
| 57 | MIPI_DSI_LN1P | 6.60 | |
| 58 | MIPI_DSI_LN2N | 8.20 | 0.74 |
| 59 | MIPI_DSI_LN2P | 8.94 | |
| 60 | MIPI_DSI_LN3N | 9.28 | 0.96 |
| 61 | MIPI_DSI_LN3P | 10.24 | |
| 63 | MIPI_CSI0_CLKN | 10.55 | 0.54 |
| 64 | MIPI_CSI0_CLKP | 11.09 | |

| | | | |
|---|---|---|---|
| 65 | MIPI_CSI0_LN0N | 12.13 | 0.40 |
| 66 | MIPI_CSI0_LN0P | 12.53 | |
| 67 | MIPI_CSI0_LN1N | 13.73 | 0.76 |
| 68 | MIPI_CSI0_LN1P | 14.49 | |
| 70 | MIPI_CSI1_CLKN | 17.32 | 0.13 |
| 71 | MIPI_CSI1_CLKP | 17.45 | |
| 72 | MIPI_CSI1_LN0N | 18.89 | 0.35 |
| 73 | MIPI_CSI1_LN0P | 19.24 | |

## 3.21. Sensor Interfaces

SC20 module supports communication with sensors via I2C interfaces, and it supports ALS/PS, compass, G-sensor, and gyroscopic sensors.

Verified sensor models by Quectel include: BST-BMA223, STK3311-WV, MPU-6881 and MMC35240PJ.

**Table 26: Pin Definition of Sensor Interfaces**

| Pin Name | Pin No | I/O | Description | Comment |
|---|---|---|---|---|
| SENSOR_I2C_SCL | 91 | OD | I2C clock signal for external sensor | |
| SENSOR_I2C_SDA | 92 | OD | I2C data signal for external sensor | |
| GPIO_88 | 99 | DI | Gyroscope sensor interrupt signal 2 | Default configuration; but not limited to these GPIO pins. |
| GPIO_89 | 100 | DI | Gyroscope sensor interrupt signal 1 | |
| GPIO_94 | 107 | DI | Proximity sensor interrupt signal | |
| GPIO_36 | 108 | DI | Compass sensor interrupt signal | |
| GPIO_65 | 109 | DI | Gravity sensor interrupt signal 2 | |
| GPIO_96 | 110 | DI | Gravity sensor interrupt signal 1 | |

## 3.22. Audio Interfaces

SC20 module provides two analog input channels and three analog output channels. The following table shows the pin definition.

**Table 27: Pin Definition of Audio Interfaces**

| Pin Name | Pin No | I/O | Description | Comment |
|---|---|---|---|---|
| MIC1P | 4 | AI | Microphone positive input for channel 1 | |
| MIC_GND | 5 | | MIC reference ground | |
| MIC2P | 6 | AI | Microphone positive input for channel 2 | |
| EARP | 8 | AO | Earpiece positive output | |
| EARN | 9 | AO | Earpiece negative output | |
| SPKP | 10 | AO | Speaker positive output | |
| SPKN | 11 | AO | Speaker negative output | |
| HPH_R | 136 | AO | Headphone right channel output | |
| HPH_GND | 137 | AI | Headphone virtual ground | |
| HPH_L | 138 | AO | Headphone left channel output | |
| HS_DET | 139 | AI | Headset insertion detection | High level by default |

- The module offers two audio input channels which are both single-ended channels.
- The earpiece interface uses differential output.
- The loudspeaker interface uses differential output as well. The output channel is available with a Class-D amplifier whose output power is 879mW when VBAT is 4.2V and load is 8Ω.
- The headphone interface features stereo left and right channel output, and headphone insert detection function is supported.

### 3.22.1. Reference Circuit Design for Microphone Interfaces

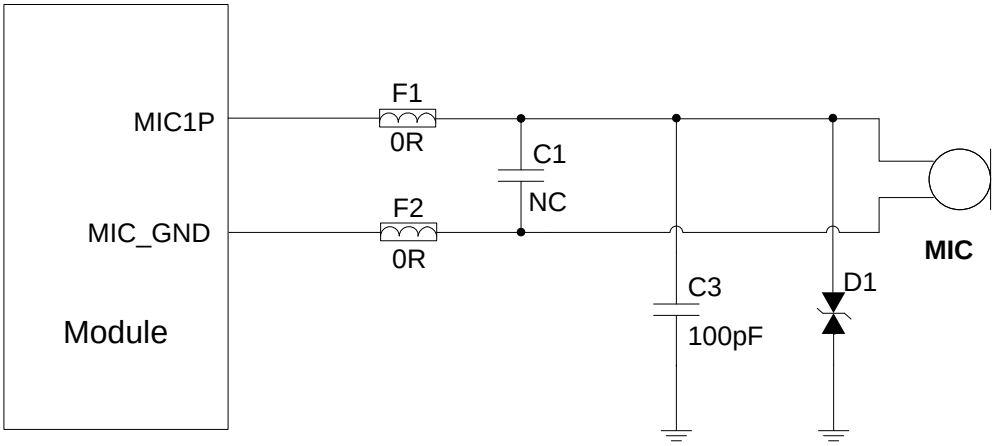


**Figure 26: Reference Circuit Design for Microphone Interfaces**

### 3.22.2. Reference Circuit Design for Receiver Interface

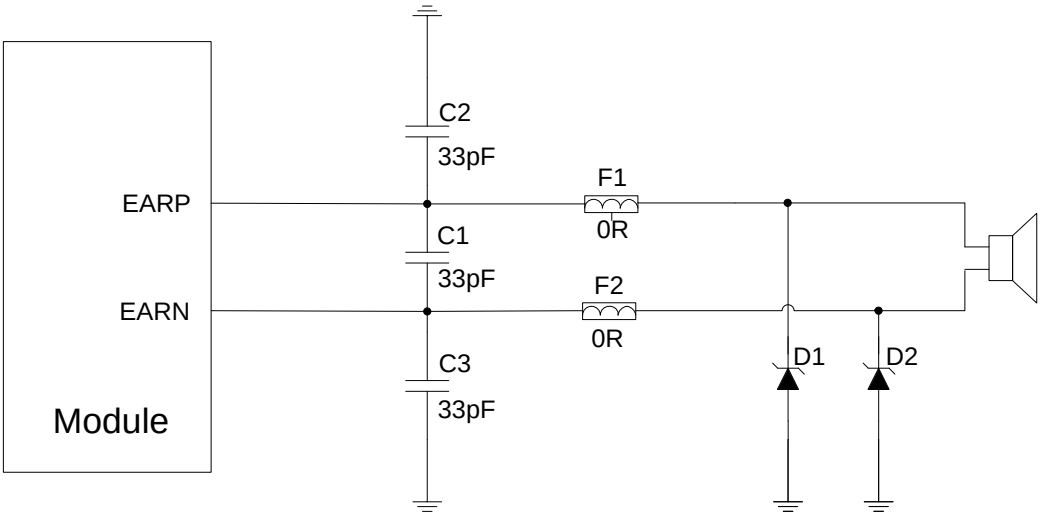


**Figure 27: Reference Circuit Design for Receiver Interface**

### 3.22.3. Reference Circuit Design for Headphone Interface

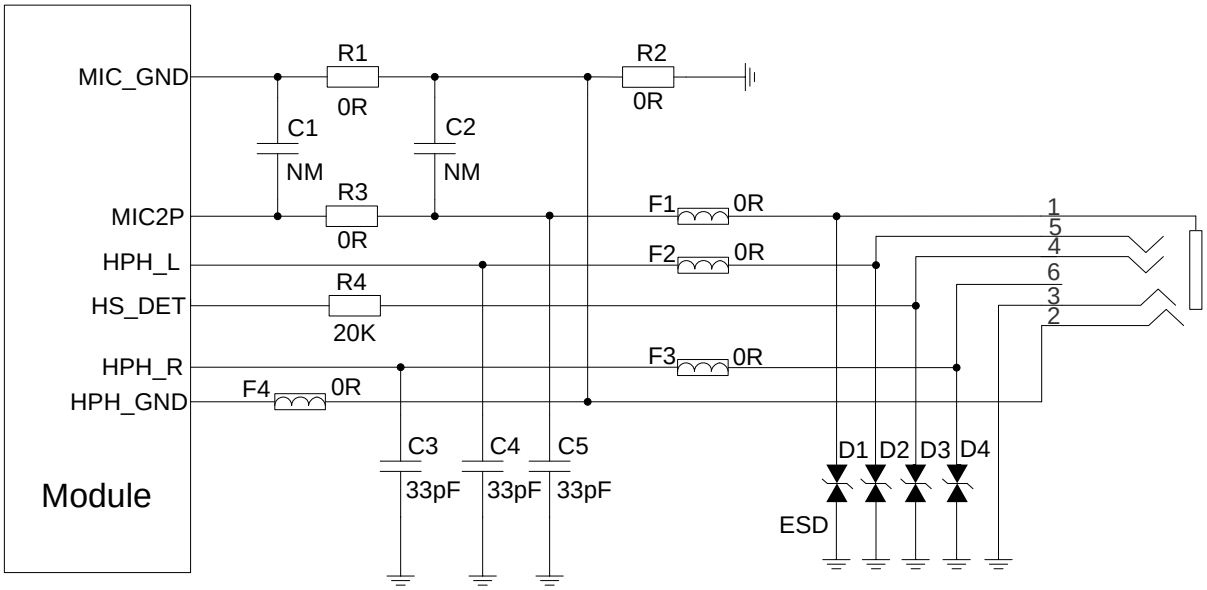


**Figure 28: Reference Circuit Design for Headphone Interface**

### 3.22.4. Reference Circuit Design for Loudspeaker Interface

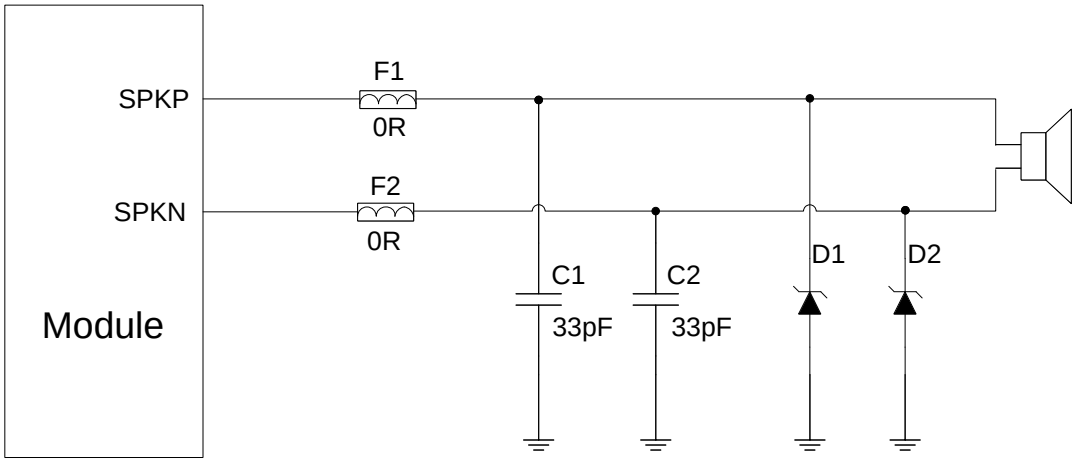


**Figure 29: Reference Circuit Design for Loudspeaker Interface**

### 3.22.5. Audio Interfaces Design Considerations

It is recommended to use the electret microphone with dual built-in capacitors (e.g. 10pF and 33pF) for filtering out RF interference, thus reducing TDD noise. The 33pF capacitor is applied for filtering out RF

interference when the module is transmitting at EGSM900MHz. Without placing this capacitor, TDD noise could be heard. Moreover, the 10pF capacitor here is used for filtering out 1800MHz RF interference. Please note that the resonant frequency point of a capacitor largely depends on the material and production technique. Therefore, customers would have to discuss with their capacitor vendors to choose the most suitable capacitor for filtering out high-frequency noises.

The severity degree of the RF interference in the voice channel during GSM transmitting largely depends on the application design. In some cases, EGSM900 TDD noise is more severe; while in other cases, DCS1800 TDD noise is more obvious. Therefore, a suitable capacitor can be selected based on the test results. Sometimes, even no RF filtering capacitor is required.

The capacitor which is used for filtering out RF noise should be close to the audio device or audio interface. The trace should be as short as possible, and it is recommended to route the trace for capacitors first and then for other points.

In order to decrease radio or other signal interference, RF antennas should be placed away from audio interfaces and audio traces. Power traces cannot be parallel with and also should be far away from the audio traces.

The differential audio traces must be routed according to the differential signal layout rule.

## 3.23. Emergency Download Interface

USB_BOOT is an emergency download interface. Pull up to LDO5_1V8 during power-up will force the module enter into emergency download mode. This is an emergency option when there are failures such as abnormal startup or running. For convenient firmware upgrade and debugging in the future, please reverse this pin. The reference circuit design is shown as below.

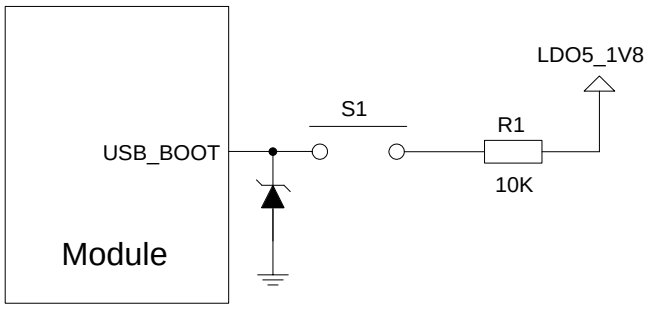


**Figure 30: Reference Circuit Design for Emergency Download Interface**

# 4 Wi-Fi and BT

SC20 module provides a shared antenna interface ANT_WIFI/BT for Wi-Fi and Bluetooth (BT) functions. The interface impedance is 50Ω. External antennas such as PCB antenna, sucker antenna and ceramic antenna can be connected to the module via the interface, so as to achieve Wi-Fi and BT functions.

## 4.1. Wi-Fi Overview

SC20 series module supports 2.4GHz/5GHz double-band WLAN wireless communication based on IEEE 802.11a/b/g/n standard protocols. The maximum data rate is up to 150Mbps.

The features are as below:

- Support Wake-on-WLAN (WoWLAN)
- Support ad hoc mode
- Support WAPI SMS4 hardware encryption
- Support AP mode
- Support Wi-Fi Direct
- Support MCS 0-7 for HT20 and HT40

### 4.1.1. Wi-Fi Performance

The following table lists the Wi-Fi transmitting and receiving performance of SC20 module.

**Table 28: Wi-Fi Receiving Performance**

| | Standard | Rate | Sensitivity |
|---|---|---|---|
| 2.4GHz | 802.11b | 1Mbps | -96dBm |
| | 802.11b | 11Mbps | -87dBm |
| | 802.11g | 6Mbps | -91dBm |
| | 802.11g | 54Mbps | -74dBm |

| | | | |
|---|---|---|---|
| | 802.11n HT20 | MCS0 | -90dBm |
| | 802.11n HT20 | MCS7 | -72dBm |
| | 802.11n HT40 | MCS0 | -87dBm |
| | 802.11n HT40 | MCS7 | -68dBm |
| 5GHz | 802.11a | 6Mbps | -90dBm |
| | 802.11a | 54Mbps | -71dBm |
| | 802.11n HT20 | MCS0 | -88dBm |
| | 802.11n HT20 | MCS7 | -69dBm |
| | 802.11n HT40 | MCS0 | -86dBm |
| | 802.11n HT40 | MCS7 | -66dBm |

Referenced specifications are listed below:

- IEEE 802.11n WLAN MAC and PHY, October 2009 + IEEE 802.11-2007 WLAN MAC and PHY, June 2007
- IEEE Std 802.11b, IEEE Std 802.11d, IEEE Std 802.11e, IEEE Std 802.11g, IEEE Std 802.11i: IEEE 802.11-2007 WLAN MAC and PHY, June 2007

## 4.2. BT Overview

SC20 module supports BT4.2 (BR/EDR+BLE) specification, as well as GFSK, 8-DPSK, π/4-DQPSK modulation modes.

- Maximally support up to 7 wireless connections.
- Maximally support up to 3.5 piconets at the same time.
- Support one SCO (Synchronous Connection Oriented) or eSCO connection.

The BR/EDR channel bandwidth is 1MHz, and can accommodate 79 channels. The BLE channel bandwidth is 2MHz, and can accommodate 40 channels.

**Table 29: BT Data Rate and Version**

| Version | Data rate | Maximum Application Throughput | Comment |
|---|---|---|---|
| 1.2 | 1 Mbit/s | >80 Kbit/s | |
| 2.0 + EDR | 3 Mbit/s | >80 Kbit/s | |
| 3.0 + HS | 24 Mbit/s | Reference 3.0 + HS | |
| 4.0 | 24 Mbit/s | Reference 4.0 LE | |

Referenced specifications are listed below:

- Bluetooth Radio Frequency TSS and TP Specification 1.2/2.0/2.0 + EDR/2.1/2.1+ EDR/3.0/3.0 + HS, August 6, 2009
- Bluetooth Low Energy RF PHY Test Specification, RF-PHY.TS/4.0.0, December 15, 2009

# 5 GNSS

SC20 module integrates a Qualcomm IZat™ GNSS engine (GEN 8C) which supports multiple positioning and navigation systems including GPS, GLONASS and BeiDou. With an embedded LNA, the module provides greatly improved positioning accuracy.

## 5.1. GNSS Performance

The following table lists the GNSS performance of SC20 module in conduction mode.

**Table 29: GNSS Performance**

| Parameter | Description | Typ. | Unit |
|---|---|---|---|
| Sensitivity (GNSS) | Cold start | -146 | dBm |
| | Reacquisition | -157 | dBm |
| | Tracking | -157 | dBm |
| TTFF (GNSS) | Cold start | 32 | s |
| | Warm start | 30 | s |
| | Hot start | 2 | s |
| Static Drift (GNSS) | CEP-50 | 6 | m |

## 5.2. GNSS RF Design Guidelines

Bad design of antenna and layout may cause reduced GPS receiving sensitivity, longer GPS positioning time, or reduced positioning accuracy. In order to avoid this, please follow the reference design rules as below:

- Maximize the distance between the GNSS RF part and the GPRS RF part (including trace routing and antenna layout) to avoid mutual interference.
- In user systems, GNSS RF signal lines and RF components should be placed far away from high speed circuits, switched-mode power supplies, power inductors, the clock circuit of single-chip microcomputers, etc.
- For applications with harsh electromagnetic environment or with high requirement on ESD protection, it is recommended to add ESD protective diodes for the antenna interface. Only diodes with ultra-low junction capacitance such as 0.05pF can be selected. Otherwise, there will be effects on the impedance characteristic of RF circuit loop, or attenuation of bypass RF signal may be caused.
- Control the impedance of either feeder line or PCB trace as 50Ω, and keep the trace length as short as possible.
- Refer to ***Chapter 6.3*** for GNSS reference circuit design.

# 6 Antenna Interfaces

SC20 provides four antenna interfaces for main antenna, Rx-diversity/MIMO antenna, GNSS antenna and Wi-Fi/BT antenna, respectively. The antenna ports have an impedance of 50Ω.

## 6.1. Main/Rx-diversity Antenna Interfaces

The pin definition of main/Rx-diversity antenna interfaces is shown below.

**Table 30: Pin Definition of Main/Rx-diversity Antenna Interfaces**

| Pin Name | Pin No. | I/O | Description | Comment |
|---|---|---|---|---|
| ANT_MAIN | 87 | IO | Main antenna | 50Ω impedance |
| ANT_DRX | 131 | AI | Diversity antenna | |

### 6.1.1. Operating Frequency

**Table 31: SC20-CE R1.1 Module Operating Frequencies**

| 3GPP Band | Receive | Transmit | Unit |
|---|---|---|---|
| EGSM900 | 925~960 | 880~915 | MHz |
| DCS1800 | 1805~1880 | 1710~1785 | MHz |
| WCDMA B1 | 2110~2170 | 1920~1980 | MHz |
| WCDMA B8 | 925~960 | 880~915 | MHz |
| EVDO/CDMA BC0 | 869~894 | 824~849 | MHz |
| TD-SCDMA B34 | 2010~2025 | 2010~2025 | MHz |
| TD-SCDMA B39 | 1880~1920 | 1880~1920 | MHz |

| | | | |
|---|---|---|---|
| LTE-FDD B1 | 2110~2170 | 1920~1980 | MHz |
| LTE-FDD B3 | 1805~1880 | 1710~1785 | MHz |
| LTE-FDD B5 | 869~894 | 824~849 | MHz |
| LTE-FDD B8 | 925~960 | 880~915 | MHz |
| LTE-TDD B38 | 2570~2620 | 2570~2620 | MHz |
| LTE-TDD B39 | 1880~1920 | 1880~1920 | MHz |
| LTE-TDD B40 | 2300~2400 | 2300~2400 | MHz |
| LTE-TDD B41 | 2555~2655 | 2555~2655 | MHz |

**Table 32: SC20-EL Module Operating Frequencies**

| 3GPP Band | Receive | Transmit | Unit |
|---|---|---|---|
| GSM850 | 869~894 | 824~849 | MHz |
| EGSM900 | 925~960 | 880~915 | MHz |
| DCS1800 | 1805~1880 | 1710~1785 | MHz |
| PCS1900 | 1930~1990 | 1850~1910 | MHz |
| WCDMA B1 | 2110~2170 | 1920~1980 | MHz |
| WCDMA B5 | 869~894 | 824~849 | MHz |
| WCDMA B8 | 925~960 | 880~915 | MHz |
| LTE-FDD B1 | 2110~2170 | 1920~1980 | MHz |
| LTE-FDD B3 | 1805~1880 | 1710~1785 | MHz |
| LTE-FDD B5 | 869~894 | 824~849 | MHz |
| LTE-FDD B7 | 2620~2690 | 2500~2570 | MHz |
| LTE-FDD B8 | 925~960 | 880~915 | MHz |
| LTE-FDD B20 | 791~821 | 832~862 | MHz |
| LTE-TDD B38 | 2570~2620 | 2570~2620 | MHz |

| | | | |
|---|---|---|---|
| LTE-TDD B40 | 2300~2400 | 2300~2400 | MHz |
| LTE-TDD B41 | 2555~2655 | 2555~2655 | MHz |

**Table 33: SC20-AL Module Operating Frequencies**

| 3GPP Band | Receive | Transmit | Unit |
|---|---|---|---|
| GSM850 | 869~894 | 824~849 | MHz |
| PCS1900 | 1930~1990 | 1850~1910 | MHz |
| WCDMA B1 | 2110~2170 | 1920~1980 | MHz |
| WCDMA B2 | 1930~1990 | 1850~1910 | MHz |
| WCDMA B4 | 2110~2155 | 1710~1755 | MHz |
| WCDMA B5 | 869~894 | 824~849 | MHz |
| WCDMA B8 | 925~960 | 880~915 | MHz |
| LTE-FDD B2 | 1930~1990 | 1850~1910 | MHz |
| LTE-FDD B4 | 2110~2155 | 1710~1755 | MHz |
| LTE-FDD B5 | 869~894 | 824~849 | MHz |
| LTE-FDD B7 | 2620~2690 | 2500~2570 | MHz |
| LTE-FDD B12 | 729~746 | 699~716 | MHz |
| LTE-FDD B13 | 746~756 | 777~787 | MHz |
| LTE-FDD B25 | 1930~1995 | 1850~1915 | MHz |
| LTE-FDD B26 | 859~894 | 814~849 | MHz |

**Table 34: SC20-AUL Module Operating Frequencies**

| 3GPP Band | Receive | Transmit | Unit |
|---|---|---|---|
| GSM850 | 869~894 | 824~849 | MHz |
| EGSM900 | 925~960 | 880~915 | MHz |
| DCS1800 | 1805~1880 | 1710~1785 | MHz |

| | | | |
|---|---|---|---|
| PCS1900 | 1930~1990 | 1850~1910 | MHz |
| WCDMA B1 | 2110~2170 | 1920~1980 | MHz |
| WCDMA B2 | 1930~1990 | 1850~1910 | MHz |
| WCDMA B5 | 869~894 | 824~849 | MHz |
| WCDMA B8 | 925~960 | 880~915 | MHz |
| LTE-FDD B1 | 2110~2170 | 1920~1980 | MHz |
| LTE-FDD B3 | 1805~1880 | 1710~1785 | MHz |
| LTE-FDD B5 | 869~894 | 824~849 | MHz |
| LTE-FDD B7 | 2620~2690 | 2500~2570 | MHz |
| LTE-FDD B8 | 925~960 | 880~915 | MHz |
| LTE-FDD B28 | 758~803 | 703~748 | MHz |
| LTE-TDD B40 | 2300~2400 | 2300~2400 | MHz |

**Table 35: SC20-JL Module Operating Frequencies**

| 3GPP Band | Receive | Transmit | Unit |
|---|---|---|---|
| WCDMA B1 | 2110~2170 | 1920~1980 | MHz |
| WCDMA B6 | 875~885 | 830~840 | MHz |
| WCDMA B8 | 925~960 | 880~915 | MHz |
| WCDAM B19 | 875~890 | 830~845 | MHz |
| LTE-FDD B1 | 2110~2170 | 1920~1980 | MHz |
| LTE-FDD B3 | 1805~1880 | 1710~1785 | MHz |
| LTE-FDD B8 | 925~960 | 880~915 | MHz |
| LTE-FDD B18 | 860~875 | 815~830 | MHz |
| LTE-FDD B19 | 875~890 | 830~845 | MHz |
| LTE-FDD B26 | 859~894 | 814~849 | MHz |
| LTE-TDD B41 [1)] | 2545~2655 | 2545~2655 | MHz |

**NOTE**

[1] The bandwidth of LTE-TDD B41 for SC20-JL is 110MHz (2545MHz~2655MHz), and the corresponding channel range is 40140~41240.

### 6.1.2. Main and Rx-diversity Antenna Interfaces Reference Design

A reference circuit design for main and Rx-diversity antenna interfaces is shown as below. A π-type matching circuit should be reserved for better RF performance. The π-type matching components (R1/C1/C2, R2/C3/C4) should be placed as close to the antennas as possible and are mounted according to the actual debugging. C1, C2, C3 and C4 are not mounted and a 0Ω resistor is mounted on R1 and R2 respectively by default.

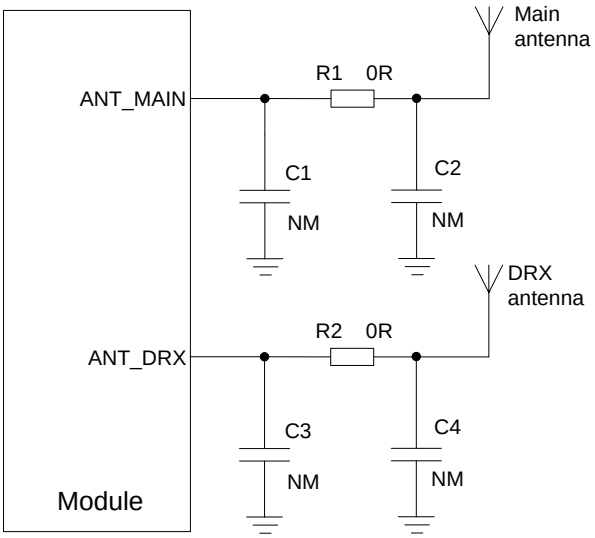


**Figure 31: Reference Circuit Design for Main and Rx-diversity Antenna Interfaces**

### 6.1.3. Reference Design of RF Layout

For user's PCB, the characteristic impedance of all RF traces should be controlled to 50Ω. The impedance of the RF traces is usually determined by the trace width (W), the materials' dielectric constant, height from the reference ground to the signal layer (H), and the clearance between RF trace and ground (S). Microstrip or coplanar waveguide is typically used in RF layout to control characteristic impedance. The following are reference designs of microstrip or coplanar waveguide with different PCB structures.

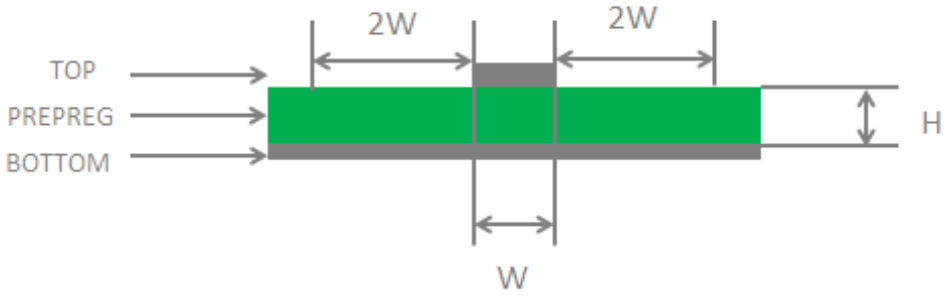


**Figure 32: Microstrip Design on a 2-layer PCB**

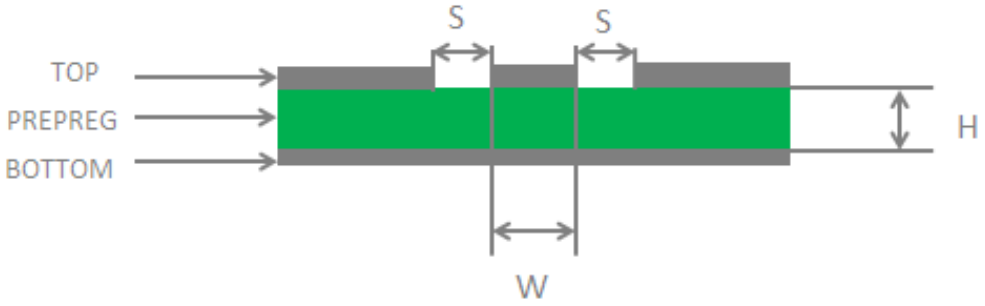


**Figure 33: Coplanar Waveguide Design on a 2-layer PCB**

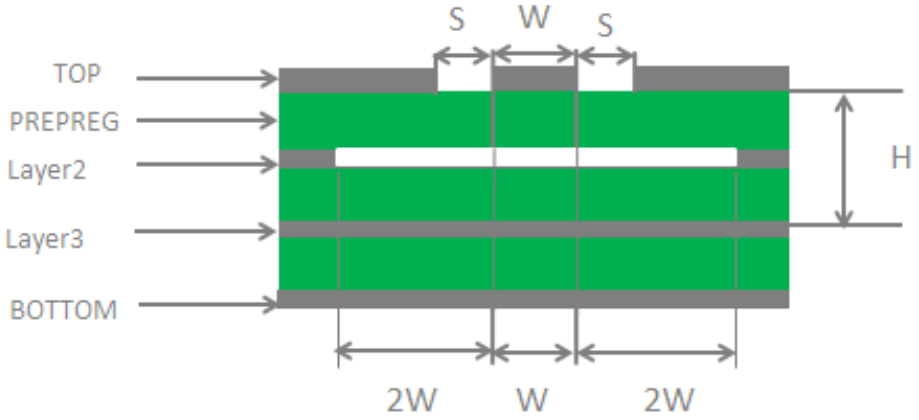


**Figure 34: Coplanar Waveguide Design on a 4-layer PCB (Layer 3 as Reference Ground)**

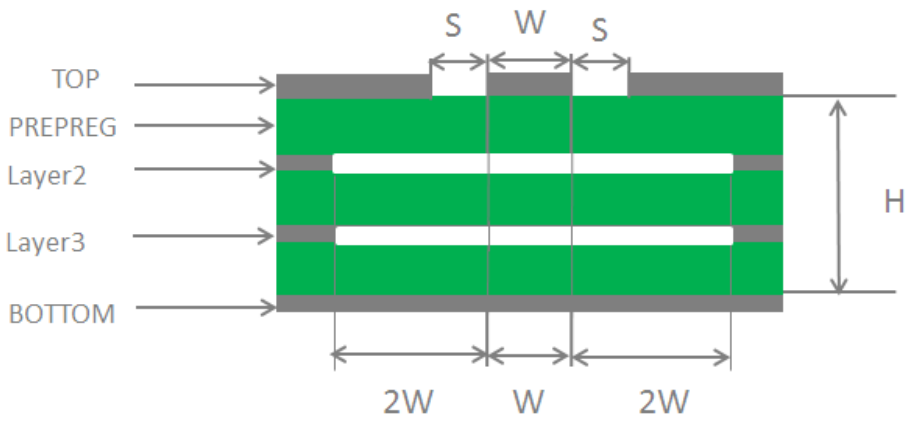


**Figure 35: Coplanar Waveguide Design on a 4-layer PCB (Layer 4 as Reference Ground)**

In order to ensure RF performance and reliability, the following principles should be complied with in RF layout design:

- Use an impedance simulation tool to accurately control the characteristic impedance of RF traces to 50Ω.
- The GND pins adjacent to RF pins should not be designed as thermal relief pads, and should be fully connected to ground.
- The distance between the RF pins and the RF connector should be as short as possible, and all the right-angle traces should be changed to curved ones.
- There should be clearance under the signal pin of the antenna connector or solder joint.
- The reference ground of RF traces should be complete. Meanwhile, adding some ground vias around RF traces and the reference ground could help to improve RF performance. The distance between the ground vias and RF traces should be no less than two times as wide as RF signal traces (2*W).

For more details about RF layout, please refer to ***document [2]***.

## 6.2. Wi-Fi/BT Antenna Interface

The following tables show the pin definition and frequency specification of the Wi-Fi/BT antenna interface.

**Table 36: Pin Definition of Wi-Fi/BT Antenna Interface**

| Pin Name | Pin No. | I/O | Description | Comment |
|---|---|---|---|---|
| ANT_WIFI/BT | 77 | IO | Wi-Fi/BT antenna interface | 50Ω impedance |

**Table 37: Wi-Fi/BT Frequency**

| Type | Frequency | Unit |
|---|---|---|
| 802.11a/b/g/n | 2400~2482<br>5180~5825 | MHz |
| BT4.2 LE | 2402~2480 | MHz |

**NOTE**

The supported Wi-Fi frequencies of SC20-JL are 2400MHz~2496MHz and 5180MHz~5825MHz.

A reference circuit design for Wi-Fi/BT antenna interface is shown as below. A π-type matching circuit should be reserved for better RF performance. The π-type matching components (R1, C1, C2) should be placed as close to the antenna as possible and are mounted according to the actual debugging. C1 and C2 are not mounted and a 0Ω resistor is mounted on R1 by default.

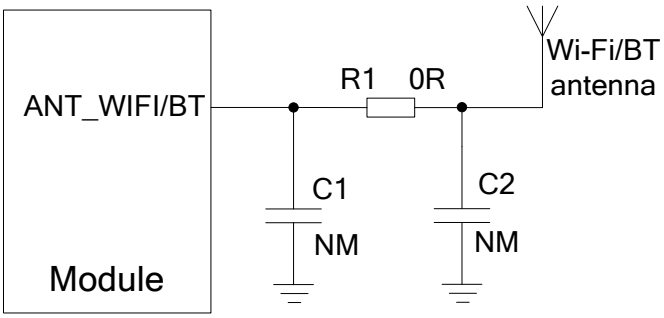


**Figure 36: Reference Circuit Design for Wi-Fi/BT Antenna**

## 6.3. GNSS Antenna Interface

The following tables show pin definition and frequency specification of GNSS antenna interface.

**Table 38: Pin Definition of GNSS Antenna Interface**

| Pin Name | Pin No. | I/O | Description | Comment |
|---|---|---|---|---|
| ANT_GNSS | 121 | AI | GNSS antenna interface | 50Ω impedance |

**Table 39: GNSS Frequency**

| Type | Frequency | Unit |
|---|---|---|
| GPS | 1575.42±1.023 | MHz |
| GLONASS | 1597.5~1605.8 | MHz |
| BeiDou | 1561.098±2.046 | MHz |

### 6.3.1. Recommended Circuit for Passive Antenna

GNSS antenna interface supports passive ceramic antennas and other types of passive antennas. A reference circuit design is given below.

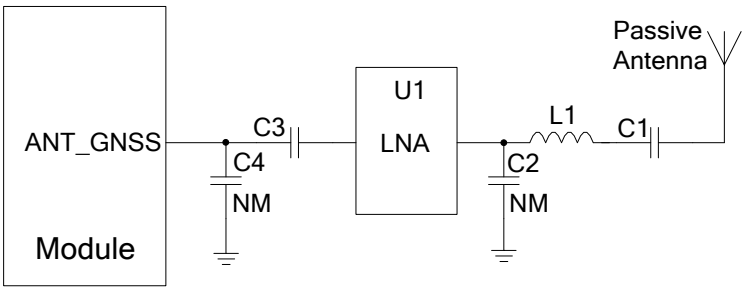


**Figure 37: Reference Circuit Design for GNSS Passive Antenna**

**NOTE**

When the passive antenna is placed far away from the module (that is, the antenna trace is long), it is recommended to add an external LNA circuit for better GNSS receiving performance, and the LNA should be placed close to the antenna.

### 6.3.2. Recommended Circuit for Active Antenna

The active antenna is powered by VCC power supply through the R1 and L1 power paths shown in the following figure. The common power supply voltage ranges from 3.3V to 5.0V. Although featuring low power consumption, the active antenna still requires stable and clean power supplies. It is recommended to use high performance LDO as the power supply. A reference design of GNSS active antenna is shown below.

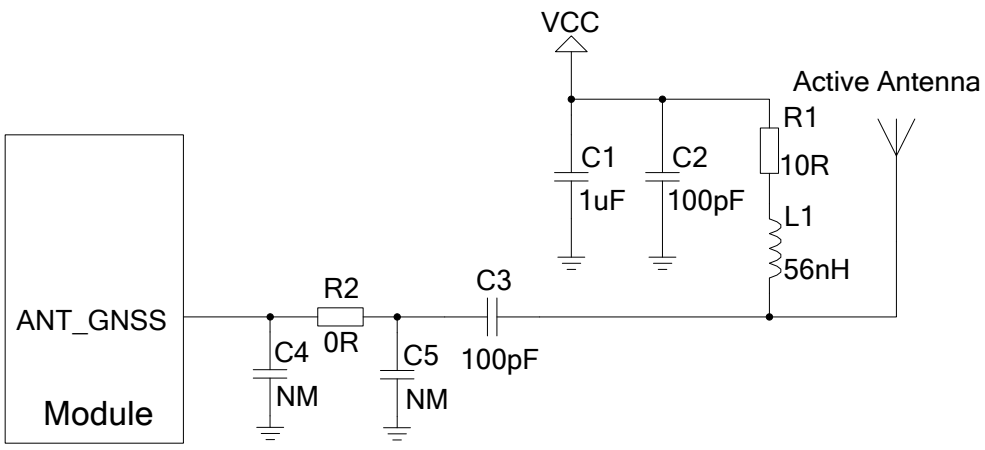


**Figure 38: Reference Circuit Design for GNSS Active Antenna**

## 6.4. Antenna Installation

### 6.4.1. Antenna Requirements

The following table shows the requirement on main antenna, RX-diversity antenna, Wi-Fi/BT antenna and GNSS antenna.

**Table 40: Antenna Requirements**

| Type | Requirements |
|---|---|
| GSM/WCDMA/TD-SCDMA/ LTE | VSWR: ≤ 2<br>Gain (dBi): 1<br>Max Input Power (W): 50<br>Input Impedance (Ω): 50<br>Polarization Type: Vertical<br>Cable Insertion Loss: < 1dB<br>(GSM850, EGSM900, WCDMA B5/B6/B8/B19, EVDO/CDMA BC0, LTE-FDD B5/B8/B12/B13/B18/B19/B20/B26/B28)<br>Cable Insertion Loss: < 1.5dB<br>(DCS1800, PCS1900, WCDMA B1/B2/B4, TD-SCDMA B34/B39, LTE-FDD B1/B2/B3/B4/B25, LTE-TDD B39)<br>Cable Insertion Loss: < 2dB<br>(LTE-FDD B7, LTE-TDD B38/B40/B41) |
| Wi-Fi/BT | VSWR: ≤ 2<br>Gain (dBi): 1<br>Max Input Power (W): 50 |

| | |
|---|---|
| | Input Impedance (Ω): 50<br>Polarization Type: Vertical<br>Cable Insertion Loss: < 1dB |
| GNSS | Frequency range: 1559MHz~1609MHz<br>Polarization: RHCP or linear<br>VSWR: < 2 (Typ.)<br>Passive Antenna Gain: > 0dBi<br>Active Antenna Noise Figure: < 1.5dB<br>Active Antenna Total Gain: < 17dBi (Typ.) |

**NOTE**

[1] It is recommended to use a passive GNSS antenna when LTE B13 or B14 is supported, as the use of active antenna may generate harmonics which will affect the GNSS performance.

### 6.4.2. Recommended RF Connector for Antenna Installation

If RF connector is used for antenna connection, it is recommended to use the U.FL-R-SMT connector provided by HIROSE.

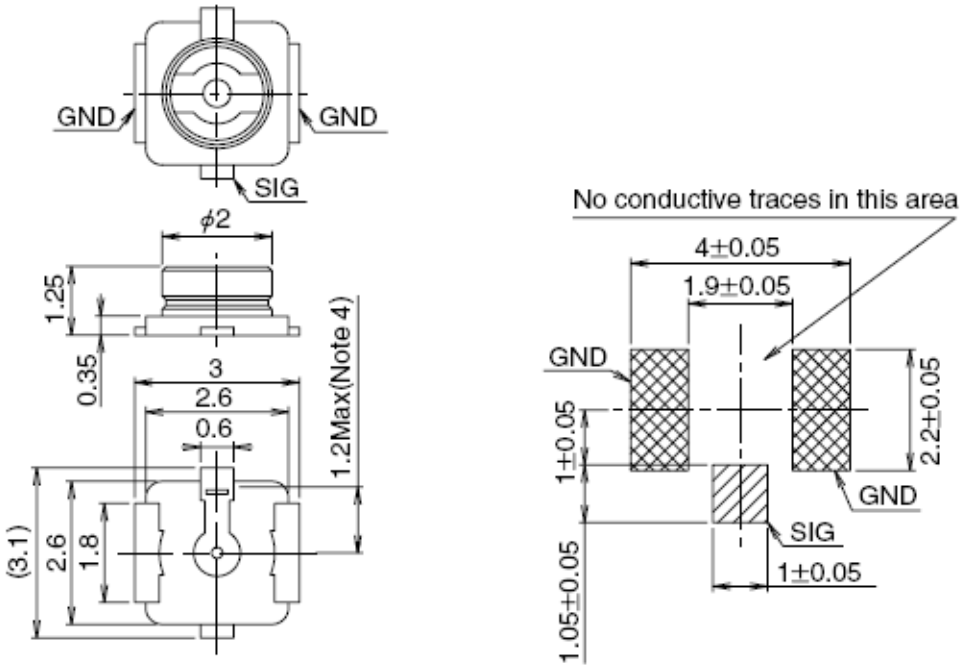


**Figure 39: Dimensions of the U.FL-R-SMT Connector (Unit: mm)**

U.FL-LP serial connectors listed in the following figure can be used to match the U.FL-R-SMT.

| | U.FL-LP-040 | U.FL-LP-066 | U.FL-LP(V)-040 | U.FL-LP-062 | U.FL-LP-088 |
|---|---|---|---|---|---|
| Part No. | 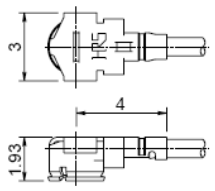  | 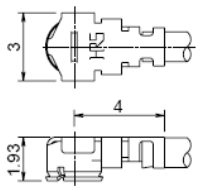  | 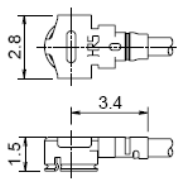  | 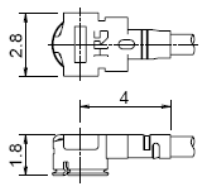  | 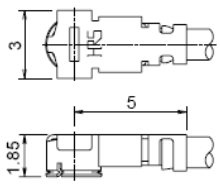  |
| Mated Height | 2.5mm Max. (2.4mm Nom.) | 2.5mm Max. (2.4mm Nom.) | 2.0mm Max. (1.9mm Nom.) | 2.4mm Max. (2.3mm Nom.) | 2.4mm Max. (2.3mm Nom.) |
| Applicable cable | Dia. 0.81mm Coaxial cable | Dia. 1.13mm and Dia. 1.32mm Coaxial cable | Dia. 0.81mm Coaxial cable | Dia. 1mm Coaxial cable | Dia. 1.37mm Coaxial cable |
| Weight (mg) | 53.7 | 59.1 | 34.8 | 45.5 | 71.7 |
| RoHS | YES | | | | |

**Figure 40: Mechanicals of U.FL-LP Connectors**

The following figure describes the space factor of mated connector.

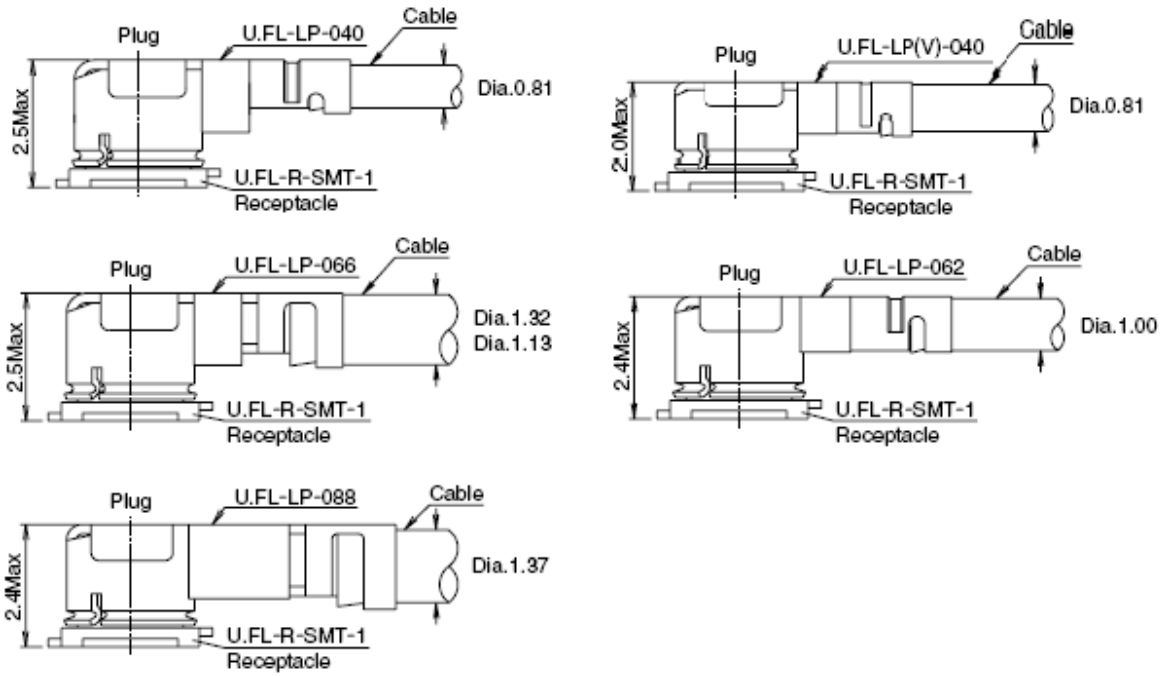


**Figure 41: Space Factor of Mated Connectors (Unit: mm)**

For more details, please visit http://www.hirose.com.

# 7 Electrical, Reliability and Radio Characteristics

## 7.1. Absolute Maximum Ratings

Absolute maximum ratings for power supply and voltage on digital and analog pins of the module are listed in the following table.

**Table 41: Absolute Maximum Ratings**

| Parameter | Min. | Max. | Unit |
|---|---|---|---|
| VBAT | -0.5 | 6 | V |
| USB_VBUS | -0.5 | 16 | V |
| Peak Current of VBAT | 0 | 3 | A |
| Voltage on Digital Pins | -0.3 | 2.3 | V |

## 7.2. Power Supply Ratings

**Table 42: SC20 Module Power Supply Ratings**

| Parameter | Description | Conditions | Min. | Typ. | Max. | Unit |
|---|---|---|---|---|---|---|
| VBAT | VBAT | The actual input voltages must stay between the minimum and maximum values. | 3.5 | 3.8 | 4.2 | V |
| | Voltage drop during transmitting burst | Maximum power control level at EGSM900. | | | 400 | mV |

| | | | | | | |
|---|---|---|---|---|---|---|
| $I_{VBAT}$ | Peak supply current (during transmission slot) | Maximum power control level at EGSM900. | | 1.8 | 3.0 | A |
| USB_VBUS | USB detection | | 4.35 | 5.0 | 6.3 | V |
| VRTC | Power supply voltage of backup battery. | | 2.0 | 3.0 | 3.25 | V |

## 7.3. Charging Performance Specifications

**Table 43: Charging Performance Specifications**

| Parameter | Min. | Typ. | Max. | Unit |
|---|---|---|---|---|
| Trickle charging-A current | 81 | 90 | 99 | mA |
| Trickle charging-A threshold voltage range (15.62mV steps) | 2.5 | 2.796 | 2.984 | V |
| Trickle charging-B threshold voltage range (18.75mV steps) | 3.0 | 3.2 | 3.581 | V |
| Charge voltage range (25mV steps) | 4 | 4.2 | 4.775 | V |
| Charge voltage accuracy | | | +/-2 | % |
| Charge current range (90mA steps) | 90 | | 1440 | mA |
| Charge current accuracy | | | +/-10 | % |
| Charge termination current: when charge current is from 90mA to 450mA | | 7 | | % |
| Charge termination current: when charge current is from 450mA to 1440mA | | 7.4 | | % |

## 7.4. Operation and Storage Temperatures

The operating temperature is listed in the following table.

**Table 44: Operation and Storage Temperatures**

| Parameter | Min. | Typ. | Max. | Unit |
|---|---|---|---|---|
| Operating temperature range [1)] | -35 | +25 | +65 | ºC |
| Extended temperature range [2)] | -40 | | +75 | ºC |
| Storage Temperature Range | -40 | | +90 | ºC |

**NOTES**

1. [1)] Within operation temperature range, the module is 3GPP compliant.
2. [2)] Within extended temperature range, the module remains the ability to establish and maintain a voice, SMS, data transmission, emergency call, etc. There is no unrecoverable malfunction. There are also no effects on radio spectrum and no harm to radio network. Only one or more parameters like $P_{out}$ might reduce in their value and exceed the specified tolerances. When the temperature returns to the normal operating temperature levels, the module will meet 3GPP specifications again.

## 7.5. Current Consumption

The values of current consumption are shown below.

**Table 45: SC20-CE R1.1 Current Consumption**

| Parameter | Description | Conditions | Typ. | Unit |
|---|---|---|---|---|
| $I_{VBAT}$ | OFF state | Power down | 20 | uA |
| | GSM/GPRS supply current | Sleep (USB disconnected) @DRX=2 | 3.85 | mA |
| | | Sleep (USB disconnected) @DRX=5 | 3.01 | mA |
| | | Sleep (USB disconnected) @DRX=9 | 2.91 | mA |

| | | | | |
|---|---|---|---|---|
| | WCDMA supply current | Sleep (USB disconnected) @DRX=6 | 3.30 | mA |
| | | Sleep (USB disconnected) @DRX=7 | 2.79 | mA |
| | | Sleep (USB disconnected) @DRX=8 | 2.49 | mA |
| | | Sleep (USB disconnected) @DRX=9 | 2.33 | mA |
| | LTE-FDD supply current | Sleep (USB disconnected) @DRX=5 | 5.60 | mA |
| | | Sleep (USB disconnected) @DRX=6 | 3.83 | mA |
| | | Sleep (USB disconnected) @DRX=7 | 3.02 | mA |
| | | Sleep (USB disconnected) @DRX=8 | 2.65 | mA |
| | LTE-TDD supply current | Sleep (USB disconnected) @DRX=5 | 5.49 | mA |
| | | Sleep (USB disconnected) @DRX=6 | 3.87 | mA |
| | | Sleep (USB disconnected) @DRX=7 | 3.05 | mA |
| | | Sleep (USB disconnected) @DRX=8 | 2.67 | mA |
| | GSM voice call | EGSM900 PCL=5 @31.84dBm | 290 | mA |
| | | EGSM900 PCL=12 @18.49dBm | 150 | mA |
| | | EGSM900 PCL=19 @4.95dBm | 104 | mA |
| | | DCS1800 PCL=0 @28.91dBm | 220 | mA |
| | | DCS1800 PCL=7 @15.35dBm | 150 | mA |
| | | DCS1800 PCL=15 @-0.21dBm | 120 | mA |
| | EVDO/CDMA voice call | BC0 (max power) @23.91dBm | 560 | mA |
| | | BC0 (min power) @-60.28dBm | 190 | mA |
| | WCDMA voice call | B1 (max power) @22.61dBm | 560 | mA |

| | | | | |
|---|---|---|---|---|
| | | B8 (max power) @22.74dBm | 580 | mA |
| | EDGE data transfer | EGSM900 (1UL/4DL) @26.29dBm | 220 | mA |
| | | EGSM900 (2UL/3DL) @26.15dBm | 330 | mA |
| | | EGSM900 (3UL/2DL) @26.06dBm | 420 | mA |
| | | EGSM900 (4UL/1DL) @25.92dBm | 530 | mA |
| | | DCS1800 (1UL/4DL) @24.89dBm | 180 | mA |
| | | DCS1800 (2UL/3DL) @24.74dBm | 270 | mA |
| | | DCS1800 (3UL/2DL) @24.54dBm | 360 | mA |
| | | DCS1800 (4UL/1DL) @24.44dBm | 450 | mA |
| | EVDO/CDMA data transfer | BC0 (max power) @23.68dBm | 560 | mA |
| | WCDMA data transfer | B1 (HSDPA) @21.64dBm | 540 | mA |
| | | B8 (HSDPA) @21.61dBm | 540 | mA |
| | | B1 (HSUPA) @21.36dBm | 560 | mA |
| | | B8 (HSUPA) @21.56dBm | 550 | mA |
| | LTE data transfer | LTE-FDD B1 @22.96dBm | 750 | mA |
| | | LTE-FDD B3 @22.95dBm | 700 | mA |
| | | LTE-FDD B5 @22.90dBm | 680 | mA |
| | | LTE-FDD B8 @23.17dBm | 680 | mA |
| | | LTE-TDD B38 @22.02dBm | 400 | mA |
| | | LTE-TDD B39 @22.13dBm | 410 | mA |
| | | LTE-TDD B40 @22.01dBm | 410 | mA |
| | | LTE-TDD B41 @22.31dBm | 400 | mA |

**Table 46: SC20-EL Current Consumption**

| Parameter | Description | Conditions | Typ. | Unit |
|---|---|---|---|---|
| $I_{VBAT}$ | OFF state | Power down | 20 | uA |
| | GSM/GPRS supply current | Sleep (USB disconnected) @DRX=2 | 3.58 | mA |
| | | Sleep (USB disconnected) @DRX=5 | 2.46 | mA |
| | | Sleep (USB disconnected) @DRX=9 | 2.13 | mA |
| | WCDMA supply current | Sleep (USB disconnected) @DRX=6 | 2.99 | mA |
| | | Sleep (USB disconnected) @DRX=7 | 2.35 | mA |
| | | Sleep (USB disconnected) @DRX=8 | 2.01 | mA |
| | | Sleep (USB disconnected) @DRX=9 | 1.85 | mA |
| | LTE-FDD supply current | Sleep (USB disconnected) @DRX=5 | 5.51 | mA |
| | | Sleep (USB disconnected) @DRX=6 | 3.56 | mA |
| | | Sleep (USB disconnected) @DRX=7 | 2.62 | mA |
| | | Sleep (USB disconnected) @DRX=8 | 2.14 | mA |
| | LTE-TDD supply current | Sleep (USB disconnected) @DRX=5 | 5.93 | mA |
| | | Sleep (USB disconnected) @DRX=6 | 3.74 | mA |
| | | Sleep (USB disconnected) @DRX=7 | 2.70 | mA |
| | | Sleep (USB disconnected) @DRX=8 | 2.17 | mA |
| | GSM voice call | GSM850 PCL=5 @33.13dBm | 263.8 | mA |
| | | GSM850 PCL=12 @19.15dBm | 134.7 | mA |
| | | GSM850 PCL=19 @5.31dBm | 109.2 | mA |

| | | | | |
|---|---|---|---|---|
| | | EGSM900 PCL=5 @33.07dBm | 271.2 | mA |
| | | EGSM900 PCL=12 @19.53dBm | 137.3 | mA |
| | | EGSM900 PCL=19 @5.59dBm | 110.6 | mA |
| | | DCS1800 PCL=0 @30.00dBm | 203.0 | mA |
| | | DCS1800 PCL=7 @16.45dBm | 150.7 | mA |
| | | DCS1800 PCL=15 @0.67dBm | 130.8 | mA |
| | | PCS1900 PCL=0 @29.72dBm | 195.9 | mA |
| | | PCS1900 PCL=7 @16.72dBm | 151.3 | mA |
| | | PCS1900 PCL=15 @0.98dBm | 130.0 | mA |
| | WCDMA voice call | B1 (max power) @23.18dBm | 544.1 | mA |
| | | B5 (max power) @23.22dBm | 513.5 | mA |
| | | B8 (max power) @23.29dBm | 522.7 | mA |
| | GPRS data transfer | GSM850 (1UL/4DL) @33.12dBm | 265.9 | mA |
| | | GSM850 (2UL/3DL) @33.02dBm | 435.1 | mA |
| | | GSM850 (3UL/2DL) @30.50dBm | 478.8 | mA |
| | | GSM850 (4UL/1DL) @29.49dBM | 564.0 | mA |
| | | EGSM900 (1UL/4DL) @33.10dBm | 272.7 | mA |
| | | EGSM900 (2UL/3DL) @33.00dBm | 445.0 | mA |
| | | EGSM900 (3UL/2DL) @30.96dBm | 512.0 | mA |
| | | EGSM900 (4UL/1DL) @29.93dBm | 599.2 | mA |
| | | DCS1800 (1UL/4DL) @29.96dBm | 205.8 | mA |

| | | | | |
|---|---|---|---|---|
| | | DCS1800 (2UL/3DL) @29.86dBm | 314.3 | mA |
| | | DCS1800 (3UL/2DL) @29.73dBm | 420.8 | mA |
| | | DCS1800 (4UL/1DL) @29.63dBm | 531.7 | mA |
| | | PCS1900 (1UL/4DL) @29.77dBm | 199.3 | mA |
| | | PCS1900 (2UL/3DL) @29.64dBm | 307.2 | mA |
| | | PCS1900 (3UL/2DL) @29.54dBm | 411.5 | mA |
| | | PCS1900 (4UL/1DL) @29.34dBm | 518.7 | mA |
| | EDGE data transfer | GSM850 (1UL/4DL) @26.75dBm | 172.2 | mA |
| | | GSM850 (2UL/3DL) @27.13dBm | 266.6 | mA |
| | | GSM850 (3UL/2DL) @26.63dBm | 353.1 | mA |
| | | GSM850 (4UL/1DL) @26.54dBm | 446.9 | mA |
| | | EGSM900 (1UL/4DL) @27.05dBm | 182 | mA |
| | | EGSM900 (2UL/3DL) @27.13dBm | 177.4 | mA |
| | | EGSM900 (3UL/2DL) @27.28dBm | 278.3 | mA |
| | | EGSM900 (4UL/1DL) @27.19dBm | 371.0 | mA |
| | | DCS1800 (1UL/4DL) @26.04dBm | 170.6 | mA |
| | | DCS1800 (2UL/3DL) @25.98dBm | 260.5 | mA |
| | | DCS1800 (3UL/2DL) @25.71dBm | 349.8 | mA |
| | | DCS1800 (4UL/1DL) @25.46dBm | 440.2 | mA |
| | | PCS1900 (1UL/4DL) @26.14dBm | 171.0 | mA |
| | | PCS1900 (2UL/3DL) @26.11dBm | 260.5 | mA |

| | | | | |
|---|---|---|---|---|
| | | PCS1900 (3UL/2DL) @26.11dBm | 349.6 | mA |
| | | PCS1900 (4UL/1DL) @25.70dBm | 442.3 | mA |
| | WCDMA data transfer | B1 (HSDPA) @22.43dBm | 503.8 | mA |
| | | B5 (HSDPA) @22.23dBm | 471.6 | mA |
| | | B8 (HSDPA) @22.24dBm | 481.6 | mA |
| | | B1 (HSUPA) @22.30dBm | 504.6 | mA |
| | | B5 (HSUPA) @21.93dBm | 460.5 | mA |
| | | B8 (HSUPA) @21.90dBm | 464.8 | mA |
| | LTE data transfer | LTE-FDD B1 @23.29dBm | 737 | mA |
| | | LTE-FDD B3 @23.29dBm | 756 | mA |
| | | LTE-FDD B5 @23.44dBm | 636 | mA |
| | | LTE-FDD B7 @23.28dBm | 842 | mA |
| | | LTE-FDD B8 @23.44dBm | 639 | mA |
| | | LTE-FDD B20 @23.36dBm | 684 | mA |
| | | LTE-TDD B38 @23.19dBm | 427 | mA |
| | | LTE-TDD B40 @23.17dBm | 427 | mA |
| | | LTE-TDD B41 @23.19dBm | 455 | mA |

**Table 47: SC20-AL Current Consumption**

| Parameter | Description | Conditions | Typ. | Unit |
|---|---|---|---|---|
| $I_{VBAT}$ | OFF state | Power down | 20 | uA |
| | GSM/GPRS supply current | Sleep USB disconnected) @DRX=2 | 4.08 | mA |

| | | | | |
|---|---|---|---|---|
| | | Sleep (USB disconnected) DRX=5 | 3.10 | mA |
| | | Sleep (USB disconnected) DRX=9 | 2.77 | mA |
| | WCDMA supply current | Sleep (USB disconnected) DRX=6 | 3.86 | mA |
| | | Sleep (USB disconnected) DRX=7 | 2.90 | mA |
| | | Sleep (USB disconnected) DRX=8 | 2.55 | mA |
| | | Sleep (USB disconnected) DRX=9 | 2.43 | mA |
| | FDD-LTE supply current | Sleep (USB disconnected) DRX=5 | 6.60 | mA |
| | | Sleep (USB disconnected) DRX=6 | 4.24 | mA |
| | | Sleep (USB disconnected) DRX=7 | 3.11 | mA |
| | | Sleep (USB disconnected) DRX=8 | 2.77 | mA |
| | GSM voice call | GSM850 PCL=5 @32.23dBm | 254.60 | mA |
| | | GSM850 PCL=12 @18.34dBm | 136.30 | mA |
| | | GSM850 PCL=19 @4.87dBm | 111.30 | mA |
| | | PCS1900 PCL=0 @29.14dBm | 196.60 | mA |
| | | PCS1900 PCL=7 @16.23dBm | 158.40 | mA |
| | | PCS1900 PCL=15 @0.62dBm | 135.50 | mA |
| | WCDMA voice call | B1 (max power) @23.24dBm | 548.13 | mA |
| | | B2 (max power) @23.40dBm | 575.70 | mA |
| | | B4 (max power) @23.20dBm | 561.35 | mA |
| | | B5 (max power) @23.47dBm | 558.00 | mA |
| | | B8 (max power) @23.5dBm | 557.10 | mA |
| | GPRS data transfer | GSM850 (1UL/4DL) @32.18dBm | 254.50 | mA |

| | | | | |
|---|---|---|---|---|
| | | GSM850 (2UL/3DL) @32.00dBm | 410.70 | mA |
| | | GSM850 (3UL/2DL) @30.43dBm | 496.10 | mA |
| | | GSM850 (4UL/1DL) @29.37dBm | 573.90 | mA |
| | | PCS1900 (1UL/4DL) @29.13dBm | 198.70 | mA |
| | | PCS1900 (2UL/3DL) @29.19dBm | 306.50 | mA |
| | | PCS1900 (3UL/2DL) @29.05dBm | 408.90 | mA |
| | | PCS1900 (4UL/1DL) @28.84dBm | 514.60 | mA |
| | EDGE data transfer | GSM850 (1UL/4DL) @26.39dBm | 186.00 | mA |
| | | GSM850 (2UL/3DL) @26.30dBm | 280.00 | mA |
| | | GSM850 (3UL/2DL) @26.30dBm | 368.00 | mA |
| | | GSM850 (4UL/1DL) @26.07dBm | 456.00 | mA |
| | | PCS1900 (1UL/4DL) @25.70dBm | 184.40 | mA |
| | | PCS1900 (2UL/3DL) @25.55dBm | 276.60 | mA |
| | | PCS1900 (3UL/2DL) @25.39dBm | 365.20 | mA |
| | | PCS1900 (4UL/1DL) @25.17dBm | 456.50 | mA |
| | WCDMA data transfer | B1 (HSDPA) @22.24dBm | 506.35 | mA |
| | | B2 (HSDPA) @22.44dBm | 535.10 | mA |
| | | B4 (HSDPA) @22.23dBm | 523.07 | mA |
| | | B5 (HSDPA) @22.38dBm | 513.13 | mA |
| | | B8 (HSDPA) @22.47dBm | 512.30 | mA |
| | | B1 (HSUPA) @22.2dBm | 516.00 | mA |

| | | | | |
|---|---|---|---|---|
| | | B2 (HSUPA) @22.4dBm | 545.60 | mA |
| | | B4 (HSUPA) @21.93dBm | 527.93 | mA |
| | | B5 (HSUPA) @22.26dBm | 528.94 | mA |
| | | B8 (HSUPA) @22 dBm | 507.70 | mA |
| | LTE data transfer | LTE-FDD B2 @23.05dBm | 710.01 | mA |
| | | LTE-FDD B4 @23.3dBm | 736.50 | mA |
| | | LTE-FDD B5 @23.13dBm | 626.18 | mA |
| | | LTE-FDD B7 @22.75dBm | 733.40 | mA |
| | | LTE-FDD B12 @22.74dBm | 606.02 | mA |
| | | LTE-FDD B13 @23.3dBm | 674.84 | mA |
| | | LTE-FDD B25 @23.2dBm | 665.62 | mA |
| | | LTE-FDD B26 @23.57dBm | 718.75 | mA |

**Table 48: SC20-AUL Current Consumption**

| Parameter | Description | Conditions | Typ. | Unit |
|---|---|---|---|---|
| $I_{VBAT}$ | OFF state | Power down | 20 | uA |
| | GSM/GPRS supply current | Sleep (USB disconnected) DRX=2 | 3.31 | mA |
| | | Sleep (USB disconnected) DRX=5 | 2.30 | mA |
| | | Sleep (USB disconnected) DRX=9 | 2.01 | mA |
| | WCDMA supply current | Sleep (USB disconnected) DRX=6 | 2.79 | mA |
| | | Sleep (USB disconnected) DRX=7 | 2.21 | mA |
| | | Sleep (USB disconnected) | 1.90 | mA |

| | | | | |
|---|---|---|---|---|
| | | DRX=8 | | |
| | | Sleep (USB disconnected) DRX=9 | 1.75 | mA |
| | LTE-FDD supply current | Sleep (USB disconnected) DRX=5 | 5.29 | mA |
| | | Sleep (USB disconnected) DRX=6 | 3.59 | mA |
| | | Sleep (USB disconnected) DRX=7 | 2.76 | mA |
| | | Sleep (USB disconnected) DRX=8 | 2.24 | mA |
| | LTE-TDD supply current | Sleep (USB disconnected) DRX=5 | 5.52 | mA |
| | | Sleep (USB disconnected) DRX=6 | 3.71 | mA |
| | | Sleep (USB disconnected) DRX=7 | 2.76 | mA |
| | | Sleep (USB disconnected) DRX=8 | 2.28 | mA |
| | GSM voice call | GSM850 PCL=5 @32.96dBm | 268 | mA |
| | | GSM850 PCL=12 @18.83dBm | 133 | mA |
| | | GSM850 PCL=19 @5.31dBm | 109 | mA |
| | | EGSM900 PCL=5 @32.96dBm | 267 | mA |
| | | EGSM900 PCL=12 @19.21dBm | 137 | mA |
| | | EGSM900 PCL=19 @5.60dBm | 108 | mA |
| | | DCS1800 PCL=0 @29.93dBm | 202 | mA |
| | | DCS1800 PCL=7 @16.29dBm | 152 | mA |
| | | DCS1800 PCL=15 @0.62dBm | 131 | mA |
| | | PCS1900 PCL=0 @29.67dBm | 194 | mA |
| | | PCS1900 PCL=7 @16.74dBm | 149 | mA |

| | | | | |
|---|---|---|---|---|
| | | PCS1900 PCL=15 @1.09dBm | 130 | mA |
| | WCDMA voice call | B1 (max power) @23.33dBm | 561 | mA |
| | | B2 (max power) @23.51dBm | 521 | mA |
| | | B5 (max power) @23.37dBm | 551 | mA |
| | | B8 (max power) @23.38dBm | 478 | mA |
| | GPRS data transfer | GSM850 (1UL/4DL) @32.91dBm | 267 | mA |
| | | GSM850 (2UL/3DL) @32.26dBm | 388 | mA |
| | | GSM850 (3UL/2DL) @30.72dBm | 503 | mA |
| | | GSM850 (4UL/1DL) @29.38dBm | 574 | mA |
| | | EGSM900 (1UL/4DL) @32.92dBm | 266 | mA |
| | | EGSM900 (2UL/3DL) @32.74dBm | 396 | mA |
| | | EGSM900 (3UL/2DL) @30.85dBm | 509 | mA |
| | | EGSM900 (4UL/1DL) @29.58dBm | 583 | mA |
| | | DCS1800 (1UL/4DL) @39.81dBm | 205 | mA |
| | | DCS1800 (2UL/3DL) @39.70dBm | 316 | mA |
| | | DCS1800 (3UL/2DL) @29.50dBm | 398 | mA |
| | | DCS1800 (4UL/1DL) @29.34dBm | 530 | mA |
| | | PCS1900 (1UL/4DL) @29.58dBm | 182 | mA |
| | | PCS1900 (2UL/3DL) @29.48dBm | 285 | mA |
| | | PCS1900 (3UL/2DL) @29.31dBm | 385 | mA |
| | | PCS1900 (4UL/1DL) @29.40dBm | 498 | mA |

| | | | | |
|---|---|---|---|---|
| | | GSM850 (1UL/4DL) @26.70dBm | 166 | mA |
| | | GSM850 (2UL/3DL) @27.02dBm | 300 | mA |
| | | GSM850 (3UL/2DL) @26.60dBm | 389 | mA |
| | | GSM850 (4UL/1DL) @26.33dBm | 457 | mA |
| | | EGSM900 (1UL/4DL) @26.87dBm | 178 | mA |
| | | EGSM900 (2UL/3DL) @27.27dBm | 276 | mA |
| | | EGSM900 (3UL/2DL) @26.85dBm | 394 | mA |
| | | EGSM900 (4UL/1DL) @26.53dBm | 490 | mA |
| | EDGE data transfer | DCS1800 (1UL/4DL) @25.39dBm | 197 | mA |
| | | DCS1800 (2UL/3DL) @25.40dBm | 287 | mA |
| | | DCS1800 (3UL/2DL) @25.35dBm | 373 | mA |
| | | DCS1800 (4UL/1DL) @25.05dBm | 461 | mA |
| | | PCS1900 (1UL/4DL) @26.03dBm | 168 | mA |
| | | PCS1900 (2UL/3DL) @26.07dBm | 257 | mA |
| | | PCS1900 (3UL/2DL) @25.81dBm | 345 | mA |
| | | PCS1900 (4UL/1DL) @25.70dBm | 436 | mA |
| | | B1 (HSDPA) @23.02dBm | 517 | mA |
| | | B2 (HSDPA) @23.11dBm | 550 | mA |
| | WCDMA data transfer | B5 (HSDPA) @22.68dBm | 486 | mA |
| | | B8 (HSDPA) @22.72dBm | 466 | mA |
| | | B1 (HSUPA) @22.39dBm | 521 | mA |

| | | | | |
|---|---|---|---|---|
| | | B2 (HSUPA) @23.19dBm | 509 | mA |
| | | B5 (HSUPA) @22.44dBm | 503 | mA |
| | | B8 (HSUPA) @22.25dBm | 474 | mA |
| | LTE data transfer | LTE-FDD B1 @23.37dBm | 698 | mA |
| | | LTE-FDD B3 @23.06dBm | 709 | mA |
| | | LTE-FDD B5 @23.25dBm | 643 | mA |
| | | LTE-FDD B7 @22.82dBm | 802 | mA |
| | | LTE-FDD B8 @23.47dBm | 620 | mA |
| | | LTE-FDD B28 @23.13dBm | 756 | mA |
| | | LTE-TDD B40 @23.24dBm | 388 | mA |

**Table 49: SC20-JL Current Consumption**

| Parameter | Description | Conditions | Typ. | Unit |
|---|---|---|---|---|
| $I_{VBAT}$ | OFF state | Power down | 20 | uA |
| | WCDMA supply current | Sleep (USB disconnected) DRX=6 | 3.07 | mA |
| | | Sleep (USB disconnected) DRX=7 | 2.41 | mA |
| | | Sleep (USB disconnected) DRX=8 | 2.11 | mA |
| | | Sleep (USB disconnected) DRX=9 | 1.95 | mA |
| | LTE-FDD supply current | Sleep (USB disconnected) DRX=5 | 5.17 | mA |
| | | Sleep (USB disconnected) DRX=6 | 3.50 | mA |
| | | Sleep (USB disconnected) DRX=7 | 2.60 | mA |
| | | Sleep (USB disconnected) | 2.16 | mA |

| | | | | |
|---|---|---|---|---|
| | | DRX=8 | | |
| | LTE-TDD supply current | Sleep (USB disconnected) DRX=5 | 5.40 | mA |
| | | Sleep (USB disconnected) DRX=6 | 3.53 | mA |
| | | Sleep (USB disconnected) DRX=7 | 2.62 | mA |
| | | Sleep (USB disconnected) DRX=8 | 2.17 | mA |
| | WCDMA voice call | B1 (max power) @22.80dBm | 460 | mA |
| | | B6 (max power) @23.09dBm | 505 | mA |
| | | B8 (max power) @23.02dBm | 504 | mA |
| | | B19 (max power) @23.07dBm | 505 | mA |
| | WCDMA data transfer | B1 (HSDPA) @22.13dBm | 482 | mA |
| | | B6 (HSDPA) @22.05dBm | 477 | mA |
| | | B8 (HSDPA) @22.17dBm | 471 | mA |
| | | B19 (HSDPA) @22.31dBm | 500 | mA |
| | | B1 (HSUPA) @21.4dBm | 494 | mA |
| | | B6 (HSUPA) @22.05dBm | 499 | mA |
| | | B8 (HSUPA) @21.57dBm | 472 | mA |
| | | B19 (HSUPA) @22.14dBm | 496 | mA |
| | LTE data transfer | LTE-FDD B1 @23.64dBm | 636 | mA |
| | | LTE-FDD B3 @23.52dBm | 673 | mA |
| | | LTE-FDD B8 @23.40dBm | 637 | mA |
| | | LTE-FDD B18 @23.45dBm | 650 | mA |

| | | | |
|---|---|---|---|
| | LTE-FDD B19 @23.42dBm | 642 | mA |
| | LTE-FDD B26 @23.36dBm | 645 | mA |
| | LTE-TDD B41 @23.23dBm | 451 | mA |

## 7.6. RF Output Power

The following table shows the RF output power of SC20 module.

**Table 50: RF Output Power**

| Frequency | Max. | Min. |
|---|---|---|
| GSM850 | 33dBm±2dB | 5dBm±5dB |
| EGSM900 | 33dBm±2dB | 5dBm±5dB |
| DCS1800 | 30dBm±2dB | 0dBm±5dB |
| PCS1900 | 30dBm±2dB | 0dBm±5dB |
| WCDMA B1 | 24dBm+1/-3dB | <-49dBm |
| WCDMA B2 | 24dBm+1/-3dB | <-49dBm |
| WCDMA B4 | 24dBm+1/-3dB | <-49dBm |
| WCDMA B5 | 24dBm+1/-3dB | <-49dBm |
| WCDMA B6 | 24dBm+1/-3dB | <-49dBm |
| WCDMA B8 | 24dBm+1/-3dB | <-49dBm |
| WCDMA B19 | 24dBm+1/-3dB | <-49dBm |
| EVDO/CDMA BC0 | 24dBm+3/-1dB | <-49dBm |
| TD-SCDMA B34 | 24dBm+1/-3dB | <-49dBm |
| TD-SCDMA B39 | 24dBm+1/-3dB | <-49dBm |

| | | |
|---|---|---|
| LTE-FDD B1 | 23dBm±2dB | <-39dBm |
| LTE-FDD B2 | 23dBm±2dB | <-39dBm |
| LTE-FDD B3 | 23dBm±2dB | <-39dBm |
| LTE-FDD B4 | 23dBm±2dB | <-39dBm |
| LTE-FDD B5 | 23dBm±2dB | <-39dBm |
| LTE-FDD B7 | 23dBm±2dB | <-39dBm |
| LTE-FDD B8 | 23dBm±2dB | <-39dBm |
| LTE-FDD B12 | 23dBm±2dB | <-39dBm |
| LTE-FDD B13 | 23dBm±2dB | <-39dBm |
| LTE-FDD B18 | 23dBm±2dB | <-39dBm |
| LTE-FDD B19 | 23dBm±2dB | <-39dBm |
| LTE-FDD B20 | 23dBm±2dB | <-39dBm |
| LTE-FDD B25 | 23dBm±2dB | <-39dBm |
| LTE-FDD B26 | 23dBm±2dB | <-39dBm |
| LTE-FDD B28 | 23dBm±2dB | <-39dBm |
| LTE-TDD B38 | 23dBm±2dB | <-39dBm |
| LTE-TDD B39 | 23dBm±2dB | <-39dBm |
| LTE-TDD B40 | 23dBm±2dB | <-39dBm |
| LTE-TDD B41 | 23dBm±2dB | <-39dBm |

**NOTE**

In GPRS 4 slots TX mode, the maximum output power is reduced by 3dB. This design conforms to the GSM specification as described in ***Chapter 13.16*** of *3GPP TS 51.010-1*.

## 7.7. RF Receiving Sensitivity

The following table shows the RF receiving sensitivity of SC20 module.

**Table 51: SC20-CE R1.1 RF Receiving Sensitivity**

| Frequency | Receive Sensitivity (Typ.) | | | 3GPP (SIMO) |
|---|---|---|---|---|
| | Primary | Diversity | SIMO | |
| EGSM900 | -109dBm | / | / | -102dBm |
| DCS1800 | -109dBm | / | / | -102dBm |
| WCDMA B1 | -110dBm | / | / | -106.7dBm |
| WCDMA B8 | -110dBm | / | / | -103.7dBm |
| EVDO/CDMA BC0 | -108dBm | / | / | -104dBm |
| TD-SCDMA B34 | -113dBm | / | / | -108dBm |
| TD-SCDMA B39 | -113dBm | / | / | -108dBm |
| LTE-FDD B1 (10M) | -98dBm | -99.1dBm | -100.6dBm | -96.3dBm |
| LTE-FDD B3 (10M) | -98dBm | -98.1dBm | -101dBm | -93.3dBm |
| LTE-FDD B5 (10M) | -98.3dBm | -99.5dBm | -101.7dBm | -94.3dBm |
| LTE-FDD B8 (10M) | -98.2dBm | -99dBm | -101dBm | -93.3dBm |
| LTE-TDD B38 (10M) | -98.3dBm | -98dBm | -99dBm | -96.3dBm |
| LTE-TDD B39 (10M) | -98.5dBm | -98.8dBm | -99.5dBm | -96.3dBm |
| LTE-TDD B40 (10M) | -98.8dBm | -98.6dBm | -101dBm | -96.3dBm |
| LTE-TDD B41 (10M) | -98.5dBm | -98dBm | -101dBm | -94.3dBm |

**Table 52: SC20-EL RF Receiving Sensitivity**

| Frequency | Receive Sensitivity (Typ.) | | | 3GPP (SIMO) |
|---|---|---|---|---|
| | Primary | Diversity | SIMO | |
| GSM850 | -109dBm | / | / | -102dBm |
| EGSM900 | -109dBm | / | / | -102dBm |
| DCS1800 | -109dBm | / | / | -102dBm |
| PCS1900 | -109dBm | / | / | -102dBm |
| WCDMA B1 | -110dBm | / | / | -106.7dBm |
| WCDMA B5 | -110dBm | / | / | -104.7dBm |
| WCDMA B8 | -110dBm | / | / | -103.7dBm |
| LTE-FDD B1 (10M) | -98dBm | -99dBm | -102dBm | -96.3dBm |
| LTE-FDD B3 (10M) | -97dBm | -98dBm | -101dBm | -93.3dBm |
| LTE-FDD B5 (10M) | -99dBm | -98dBm | -102dBm | -94.3dBm |
| LTE-FDD B7 (10M) | -97dBm | -97dBm | -102dBm | -94.3dBm |
| LTE-FDD B8 (10M) | -98dBm | -98dBm | -101dBm | -93.3dBm |
| LTE-FDD B20 (10M) | -98dBm | -98dBm | -101dBm | -93.3dBm |
| LTE-TDD B38 (10M) | -97dBm | -98dBm | -100dBm | -96.3dBm |
| LTE-TDD B40 (10M) | -97dBm | -98dBm | -100dBm | -96.3dBm |
| LTE-TDD B41 (10M) | -96dBm | -98dBm | -100dBm | -94.3dBm |

**Table 53: SC20-AL RF Receiving Sensitivity**

| Frequency | Receive Sensitivity (Typ.) | | | 3GPP (SIMO) |
|---|---|---|---|---|
| | Primary | Diversity | SIMO | |
| GSM850 | -109.5dBm | / | / | -102dBm |
| PCS1900 | -109dBm | / | / | -102dBm |
| WCDMA B1 | -110dBm | -110dBm | -113dBm | -106.7dBm |
| WCDMA B2 | -110dBm | -110dBm | -113dBm | -104.7dBm |

| | | | | |
|---|---|---|---|---|
| WCDMA B4 | -110dBm | -110dBm | -113dBm | -106.7dBm |
| WCDMA B5 | -110dBm | -111dBm | -113dBm | -104.7dBm |
| WCDMA B8 | -110dBm | / | / | -103.7dBm |
| LTE-FDD B2 (10M) | -98dBm | -99dBm | -102dBm | -94.3dBm |
| LTE-FDD B4 (10M) | -97.5dBm | -98dBm | -101dBm | -96.3dBm |
| LTE-FDD B5 (10M) | -99.5dBm | -99.5dBm | -102.5dBm | -94.3dBm |
| LTE-FDD B7 (10M) | -97dBm | -99dBm | -100dBm | -94.3dBm |
| LTE-FDD B12 (10M) | -98.5dBm | -98.5dBm | -101dBm | -93.3dBm |
| LTE-FDD B13 (10M) | -96.5dBm | -99dBm | -101dBm | -93.3dBm |
| LTE-TDD B25 (10M) | -99dBm | -99dBm | -102dBm | -92.8dBm |
| LTE-TDD B26 (10M) | -99dBm | -100dBm | -102.5dBm | -93.8dBm |

**Table 54: SC20-AUL RF Receiving Sensitivity**

| Frequency | Receive Sensitivity (Typ.) | | | 3GPP (SIMO) |
|---|---|---|---|---|
| | Primary | Diversity | SIMO | |
| GSM850 | -109dBm | / | / | -102dBm |
| EGSM900 | -109dBm | / | / | -102dBm |
| DCS1800 | -108dBm | / | / | -102dBm |
| PCS1900 | -109dBm | / | / | -102dBm |
| WCDMA B1 | -110dBm | -110dBm | -113dBm | -106.7dBm |
| WCDMA B2 | -110dBm | / | / | -104.7dBm |
| WCDMA B5 | -110dBm | -110dBm | -113dBm | -104.7dBm |
| WCDMA B8 | -110dBm | -110dBm | -113dBm | -103.7dBm |
| LTE-FDD B1 (10M) | -98dBm | -99dBm | -101dBm | -96.3dBm |
| LTE-FDD B3 (10M) | -97dBm | -98dBm | -101.8dBm | -93.3dBm |
| LTE-FDD B5 (10M) | -99dBm | -100dBm | -103dBm | -94.3dBm |

| | | | | |
|---|---|---|---|---|
| LTE-FDD B7 (10M) | -97dBm | -99dBm | -100.6dBm | -94.3dBm |
| LTE-FDD B8 (10M) | -98dBm | -100dBm | -102dBm | -93.3dBm |
| LTE-FDD B28 (10M) | -97.5dBm | -100dBm | -101.8dBm | -94.8dBm |
| LTE-TDD B40 (10M) | -97dBm | -98dBm | -100.7dBm | -96.3dBm |

**Table 55: SC20-JL RF Receiving Sensitivity**

| Frequency | Receive Sensitivity (Typ.) | | | 3GPP (SIMO) |
|---|---|---|---|---|
| | Primary | Diversity | SIMO | |
| WCDMA B1 | -110dBm | -110dBm | -113dBm | -106.7dBm |
| WCDMA B6 | -110dBm | -112dBm | -113dBm | -106.7dBm |
| WCDMA B8 | -110dBm | -110dBm | -113dBm | -103.7dBm |
| WCDMA B19 | -110dBm | -111dBm | -113dBm | -106.7dBm |
| LTE-FDD B1 (10M) | -97dBm | -97.5dBm | -100dBm | -96.3dBm |
| LTE-FDD B3 (10M) | -97dBm | -98dBm | -101.8dBm | -93.3dBm |
| LTE-FDD B8 (10M) | -97dBm | -98dBm | -100dBm | -93.3dBm |
| LTE-FDD B18 (10M) | -98dBm | -99dBm | -101.5dBm | -96.3dBm |
| LTE-TDD B19 (10M) | -98dBm | -99dBm | -101.5dBm | -96.3dBm |
| LTE-TDD B26 (10M) | -98dBm | -99dBm | -101.5dBm | -93.8dBm |
| LTE-TDD B41 (10M) | -96dBm | -96.5dBm | -100dBm | -94.3dBm |

## 7.8. Electrostatic Discharge

The module is not protected against electrostatic discharge (ESD) in general. Consequently, it should be subject to ESD handling precautions that are typically applied to ESD sensitive components. Proper ESD handling and packaging procedures must be applied throughout the processing, handling and operation of any application that incorporates the module.

The following table shows the electrostatic discharge characteristics of SC20 module.

**Table 56: ESD Characteristics ( Temperature: 25ºC, Humidity: 45%)**

| Tested Points | Contact Discharge | Air Discharge | Unit |
|---|---|---|---|
| VBAT, GND | +/-5 | +/-10 | KV |
| All Antenna Interfaces | +/-5 | +/-10 | KV |
| USB Interface | +/-0.5 | +/-1 | KV |
| Other Interfaces | +/-0.5 | +/-1 | KV |

# 8 Mechanical Dimensions

This chapter describes the mechanical dimensions of the module. All dimensions are measured in millimeter (mm), and the tolerances for dimensions without tolerance values are ±0.05mm.

## 8.1. Mechanical Dimensions of the Module

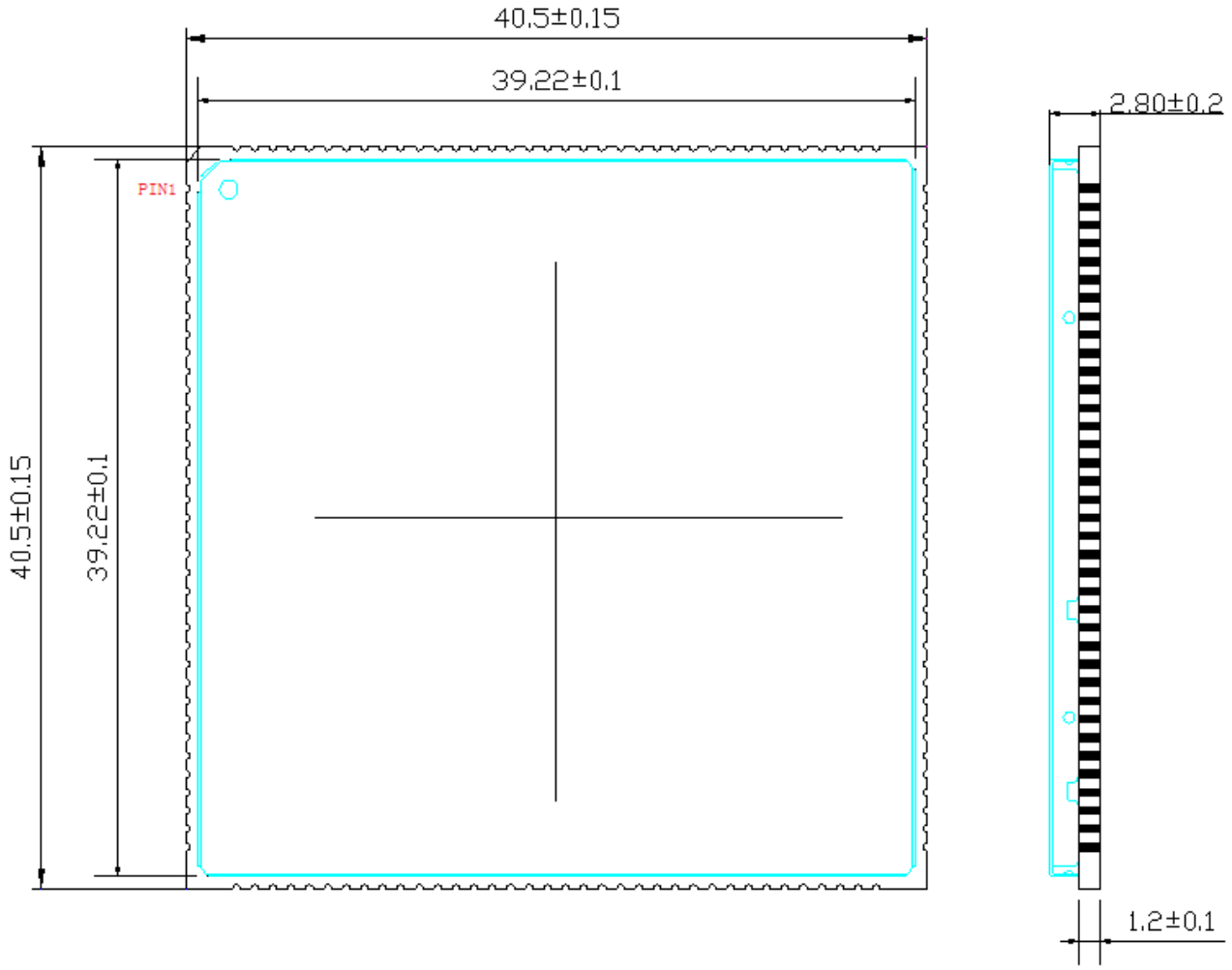


**Figure 42: Module Top and Side Dimensions**

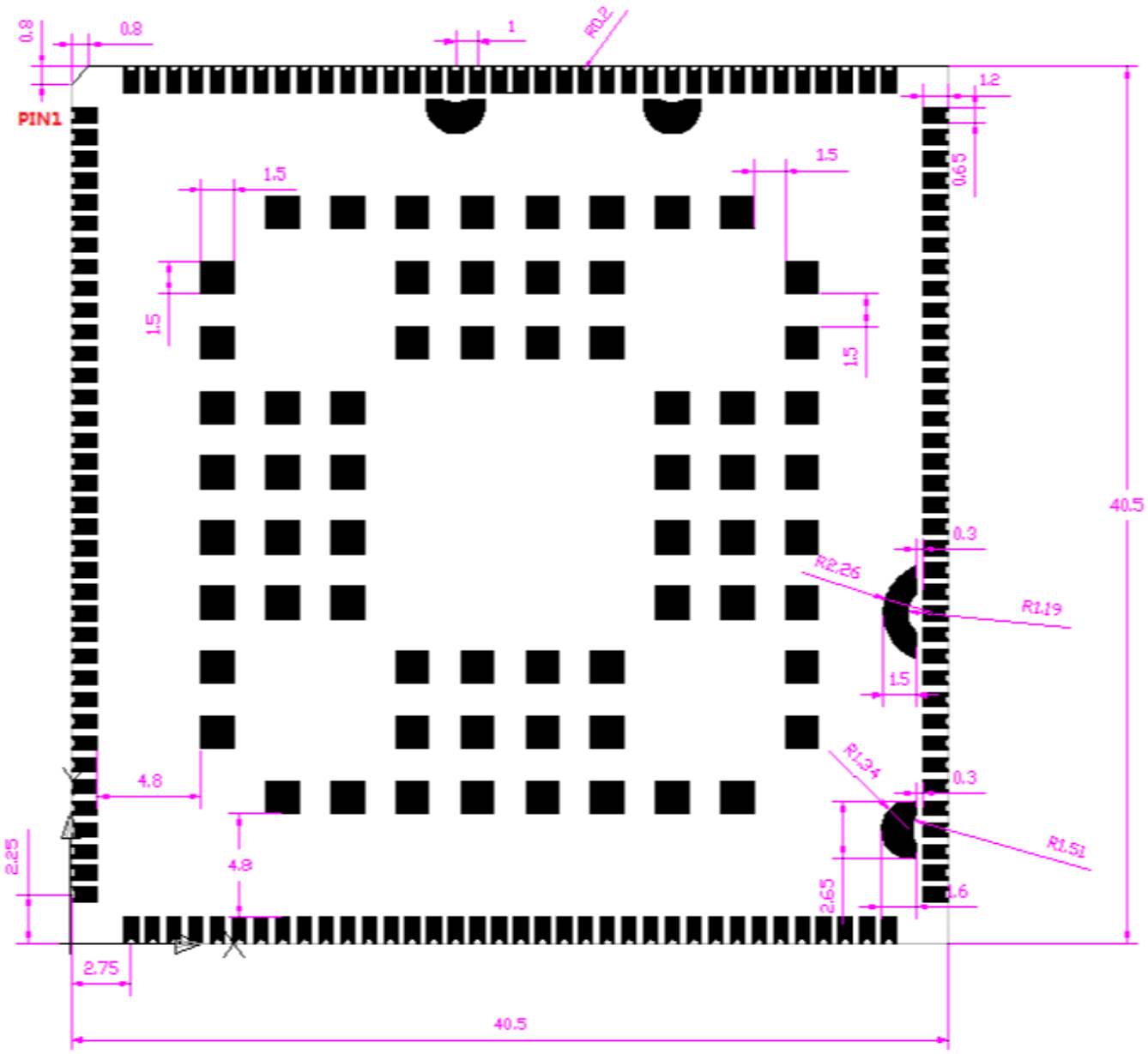


Figure 43: Module Bottom Dimensions (Top View)

## 8.2. Recommended Footprint

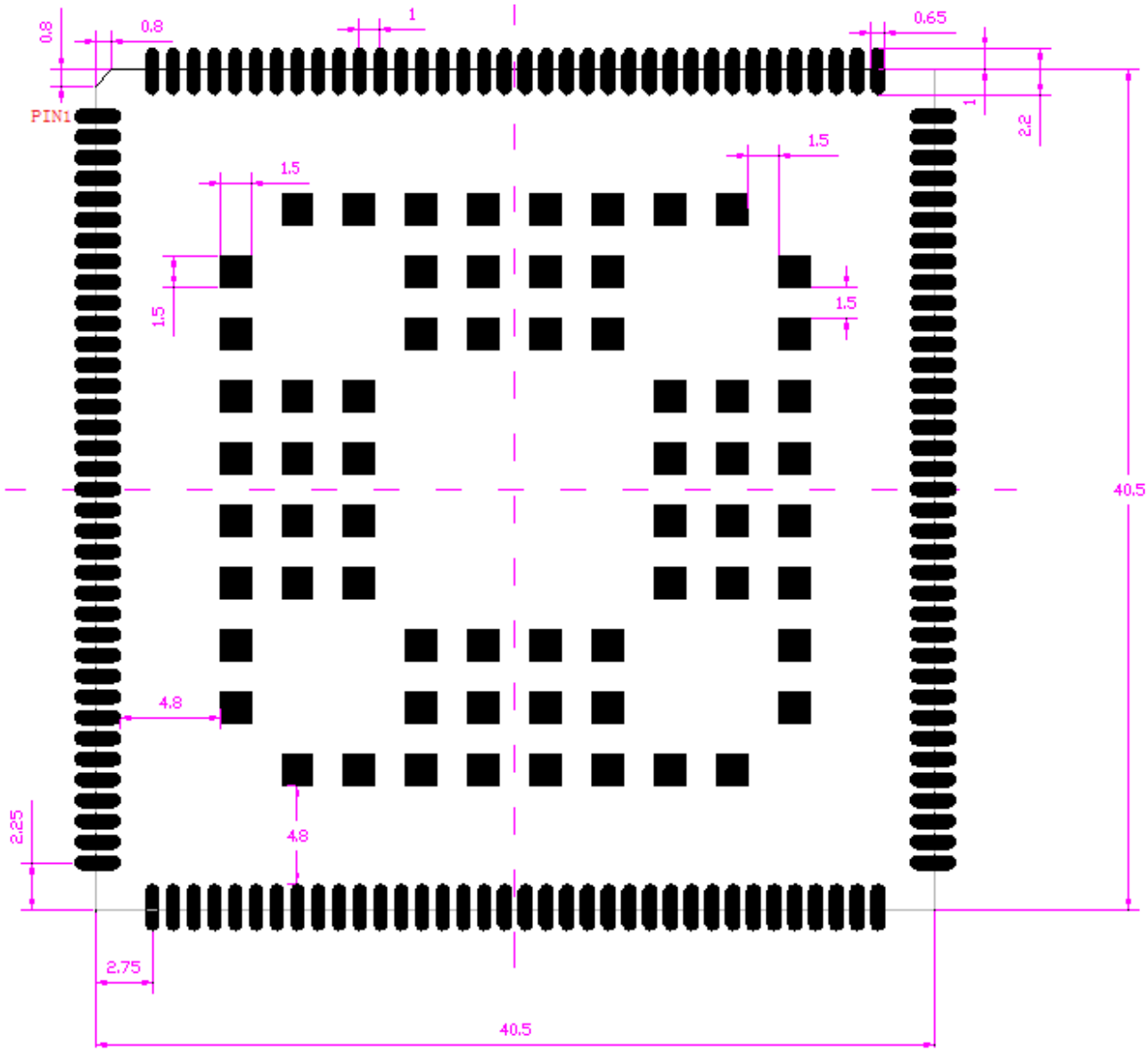


**Figure 44: Recommended Footprint (Top View)**

**NOTES**

1. For easy maintenance of the module, keep about 3mm between the module and other components on host PCB.
2. All RESERVED pins should be kept open and MUST NOT be connected to ground.

## 8.3. Top and Bottom Views of the Module

**Figure 45: Top View of the Module**

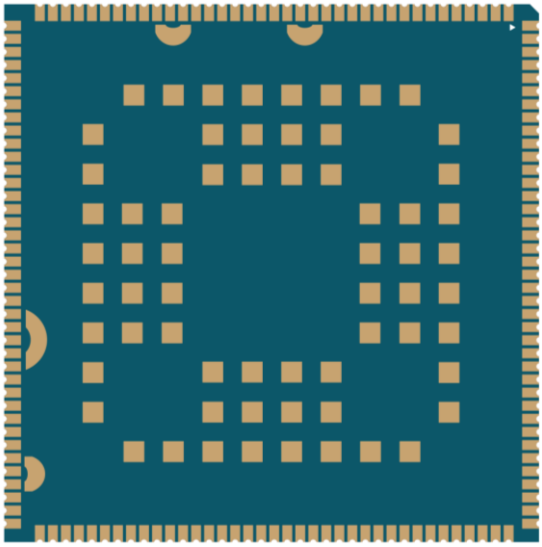

**Figure 46: Bottom View of the Module**

**NOTE**

These are renderings of SC20 module. For authentic dimension and appearance, please refer to the module that you receive from Quectel.

# 9 Storage, Manufacturing and Packaging

## 9.1. Storage

SC20 is stored in a vacuum-sealed bag. It is rated at MSL 3, and its storage restrictions are shown as below.

1. Shelf life in the vacuum-sealed bag: 12 months at <40ºC/90%RH.

2. After the vacuum-sealed bag is opened, devices that will be subjected to reflow soldering or other high temperature processes must be:
   - Mounted within 168 hours at the factory environment of ≤30ºC/60%RH.
   - Stored at <10%RH.

3. Devices require baking before mounting, if any circumstance below occurs.
   - When the ambient temperature is 23ºC±5ºC and the humidity indication card shows the humidity is >10% before opening the vacuum-sealed bag.
   - Device mounting cannot be finished within 168 hours at factory conditions of ≤30ºC/60%RH.

4. If baking is required, devices may be baked for 8 hours at 120ºC±5ºC.

**NOTE**

As the plastic package cannot be subjected to high temperature, it should be removed from devic es before high temperature (120ºC) baking. If shorter baking time is desired, please refer to *IPC/J EDECJ-STD-033* for baking procedure.

## 9.2. Manufacturing and Soldering

Push the squeegee to apply the solder paste on the surface of stencil, thus making the paste fill the stencil openings and then penetrate to the PCB. The force on the squeegee should be adjusted properly so as to produce a clean stencil surface on a single pass. To ensure the module soldering quality, the thickness of stencil for the module is recommended to be 0.18mm~0.20mm. It is recommended to slightly reduce the amount of solder paste for LGA pads, thus avoiding short-circuit. For more details, please refer to ***document [3]***.

It is suggested that the peak reflow temperature is 240~245ºC, and the absolute maximum reflow temperature is 245ºC. To avoid damage to the module caused by repeated heating, it is strongly recommended that the module should be mounted after reflow soldering for the other side of PCB has been completed. The recommended reflow soldering thermal profile (lead-free reflow soldering) and related parameters are shown below:

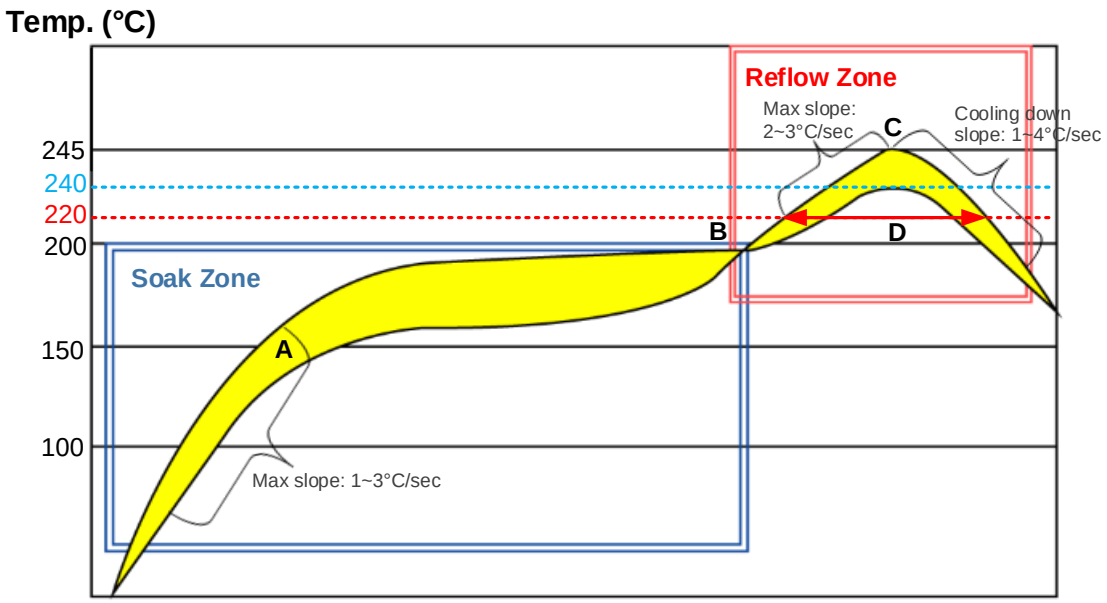


**Figure 47: Recommended Reflow Soldering Thermal Profile**

**Table 57: Recommended Thermal Profile Parameters**

| Factor | Recommendation |
|---|---|
| **Soak Zone** | |
| Max slope | 1 to 3°C/sec |

| | |
|---|---|
| Soak time (between A and B: 150°C and 200°C) | 60 to 120 sec |
| **Reflow Zone** | |
| Max slope | 2 to 3°C/sec |
| Reflow time (D: over 220°C) | 40 to 60 sec |
| Max temperature | 240°C ~ 245°C |
| Cooling down slope | 1 to 4°C/sec |
| **Reflow Cycle** | |
| Max reflow cycle | 1 |

## 9.3. Packaging

SC20 is packaged in tape and reel carriers. Each reel is 12.32m long and contains 200 modules. The following figures show the package details, measured in mm.

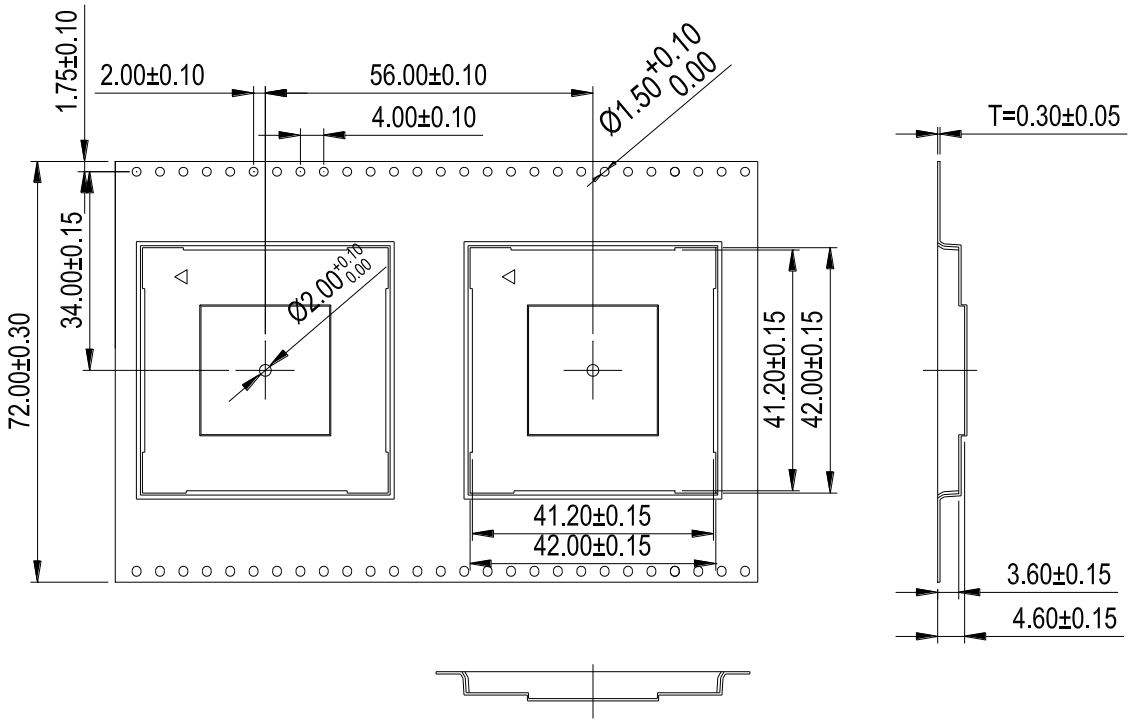


**Figure 48: Tape Dimensions**

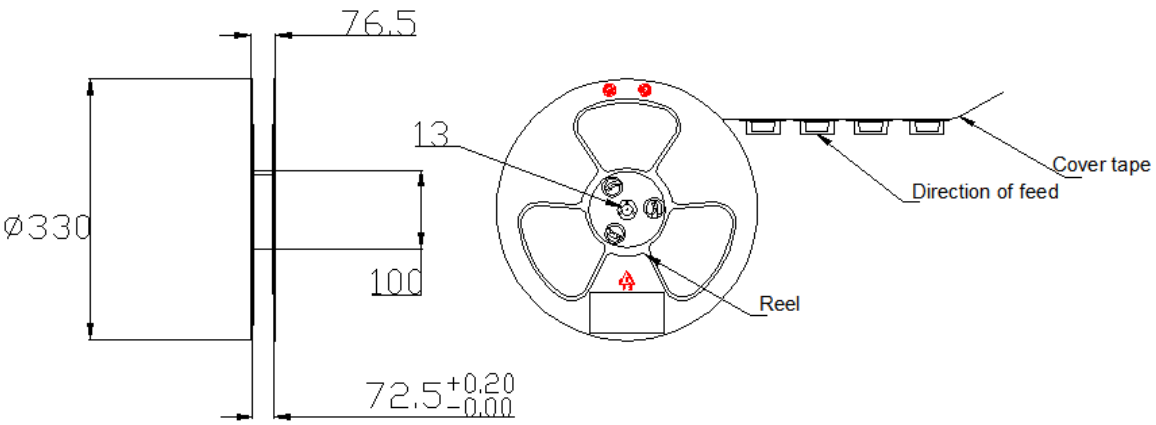


**Figure 49: Reel Dimensions**

**Table 58: Reel Packaging**

| Model Name | MOQ for MP | Minimum Package: 200pcs | Minimum Package × 4=800pcs |
|---|---|---|---|
| SC20 | 200 | Size: 370mm × 350mm × 85mm<br>N.W: 1.92kg<br>G.W: 3.17kg | Size: 380mm × 365mm × 365mm<br>N.W: 7.68kg<br>G.W: 13.63kg |

# 10 Appendix A References

**Table 59: Related Documents**

| SN | Document Name | Remark |
|---|---|---|
| [1] | Quectel_Smart_EVB_User_Guide | Smart EVB user guide |
| [2] | Quectel_RF_Layout_Application_Note | RF layout application note |
| [3] | Quectel_Module_Secondary_SMT_User_Guide | Module secondary SMT user guide |
| [4] | Quectel_SC20_Reference_Design | SC20 reference design |

**Table 60: Terms and Abbreviations**

| Abbreviation | Description |
|---|---|
| ADC | Analog-to-Digital Converter |
| AMR | Adaptive Multi-rate |
| ARP | Antenna Reference Point |
| bps | Bits Per Second |
| CS | Coding Scheme |
| CSD | Circuit Switched Data |
| CTS | Clear to Send |
| DRX | Discontinuous Reception |
| EFR | Enhanced Full Rate |
| EGSM | Extended GSM900 band (includes standard GSM900 band) |
| eSCD | Enhanced Synchronous Connection Oriented |

| | |
|---|---|
| ESD | Electrostatic Discharge |
| FR | Full Rate |
| GMSK | Gaussian Minimum Shift Keying |
| GPS | Global Positioning System |
| GSM | Global System for Mobile Communications |
| HR | Half Rate |
| HSPA | High Speed Packet Access |
| I/O | Input/Output |
| LNA | Low Noise Amplifier |
| MO | Mobile Originated |
| MS | Mobile Station (GSM engine) |
| MT | Mobile Terminated |
| PCB | Printed Circuit Board |
| PDU | Protocol Data Unit |
| PSK | Phase Shift Keying |
| QAM | Quadrature Amplitude Modulation |
| QPSK | Quadrature Phase Shift Keying |
| RF | Radio Frequency |
| RH | Room Humidity |
| RHCP | Right Hand Circularly Polarized |
| RTC | Real Time Clock |
| Rx | Receive |
| SDIO | Secure Digital Input and Output |
| SIM | Subscriber Identification Module |
| SMS | Short Message Service |

| | |
|---|---|
| TP | Touch Panel |
| TX | Transmit |
| UART | Universal Asynchronous Receiver & Transmitter |
| UMTS | Universal Mobile Telecommunications System |
| (U)SIM | Universal Subscriber Identity Module |
| Vmax | Maximum Voltage Value |
| Vnorm | Normal Voltage Value |
| Vmin | Minimum Voltage Value |
| $V_{IH}$min | Minimum Input High Level Voltage Value |
| $V_{IL}$max | Maximum Input Low Level Voltage Value |
| $V_{OH}$max | Maximum Output High Level Voltage Value |
| $V_{OH}$min | Minimum Output High Level Voltage Value |
| VSWR | Voltage Standing Wave Ratio |
| WCDMA | Wideband Code Division Multiple Access |

# 11 Appendix B GPRS Coding Schemes

**Table 61: Description of Different Coding Schemes**

| Scheme | CS-1 | CS-2 | CS-3 | C4-4 |
|---|---|---|---|---|
| Code Rate | 1/2 | 2/3 | 3/4 | 1 |
| USF | 3 | 3 | 3 | 3 |
| Pre-coded USF | 3 | 6 | 6 | 12 |
| Radio Block excl.USF and BCS | 181 | 268 | 312 | 428 |
| BCS | 40 | 16 | 16 | 16 |
| Tail | 4 | 4 | 4 | - |
| Coded Bits | 456 | 588 | 676 | 456 |
| Punctured Bits | 0 | 132 | 220 | - |
| Data Rate Kb/s | 9.05 | 13.4 | 15.6 | 21.4 |

# 12 Appendix C GPRS Multi-slot Classes

Twenty-nine classes of GPRS multi-slot modes are defined for MS in GPRS specification. Multi-slot classes are product dependent, and determine the maximum achievable data rates in both the uplink and downlink directions. Written as 3+1 or 2+2, the first number indicates the amount of downlink timeslots, while the second number indicates the amount of uplink timeslots. The active slots determine the total number of slots the GPRS device can use simultaneously for both uplink and downlink communications.

The description of different multi-slot classes is shown in the following table.

**Table 62: GPRS Multi-slot Classes**

| Multislot Class | Downlink Slots | Uplink Slots | Active Slots |
|---|---|---|---|
| 1 | 1 | 1 | 2 |
| 2 | 2 | 1 | 3 |
| 3 | 2 | 2 | 3 |
| 4 | 3 | 1 | 4 |
| 5 | 2 | 2 | 4 |
| 6 | 3 | 2 | 4 |
| 7 | 3 | 3 | 4 |
| 8 | 4 | 1 | 5 |
| 9 | 3 | 2 | 5 |
| 10 | 4 | 2 | 5 |
| 11 | 4 | 3 | 5 |
| 12 | 4 | 4 | 5 |
| 13 | 3 | 3 | NA |
| 14 | 4 | 4 | NA |

| | | | |
|---|---|---|---|
| 15 | 5 | 5 | NA |
| 16 | 6 | 6 | NA |
| 17 | 7 | 7 | NA |
| 18 | 8 | 8 | NA |
| 19 | 6 | 2 | NA |
| 20 | 6 | 3 | NA |
| 21 | 6 | 4 | NA |
| 22 | 6 | 4 | NA |
| 23 | 6 | 6 | NA |
| 24 | 8 | 2 | NA |
| 25 | 8 | 3 | NA |
| 26 | 8 | 4 | NA |
| 27 | 8 | 4 | NA |
| 28 | 8 | 6 | NA |
| 29 | 8 | 8 | NA |
| 30 | 5 | 1 | 6 |
| 31 | 5 | 2 | 6 |
| 32 | 5 | 3 | 6 |
| 33 | 5 | 4 | 6 |

# 13 Appendix D EDGE Modulation and Coding Schemes

**Table 63: EDGE Modulation and Coding Schemes**

| Coding Scheme | Modulation | Coding Family | 1 Timeslot | 2 Timeslot | 4 Timeslot |
|---|---|---|---|---|---|
| CS-1 | GMSK | / | 9.05kbps | 18.1kbps | 36.2kbps |
| CS-2 | GMSK | / | 13.4kbps | 26.8kbps | 53.6kbps |
| CS-3 | GMSK | / | 15.6kbps | 31.2kbps | 62.4kbps |
| CS-4 | GMSK | / | 21.4kbps | 42.8kbps | 85.6kbps |
| MCS-1 | GMSK | C | 8.80kbps | 17.60kbps | 35.20kbps |
| MCS-2 | GMSK | B | 11.2kbps | 22.4kbps | 44.8kbps |
| MCS-3 | GMSK | A | 14.8kbps | 29.6kbps | 59.2kbps |
| MCS-4 | GMSK | C | 17.6kbps | 35.2kbps | 70.4kbps |
| MCS-5 | 8-PSK | B | 22.4kbps | 44.8kbps | 89.6kbps |
| MCS-6 | 8-PSK | A | 29.6kbps | 59.2kbps | 118.4kbps |
| MCS-7 | 8-PSK | B | 44.8kbps | 89.6kbps | 179.2kbps |
| MCS-8 | 8-PSK | A | 54.4kbps | 108.8kbps | 217.6kbps |
| MCS-9 | 8-PSK | A | 59.2kbps | 118.4kbps | 236.8kbps |

1、the characteristic impedence depends on the dielectric of PCB, the trace width and the grand plane spacing,Coated Coplanar Line is required.the detail simulation as below.

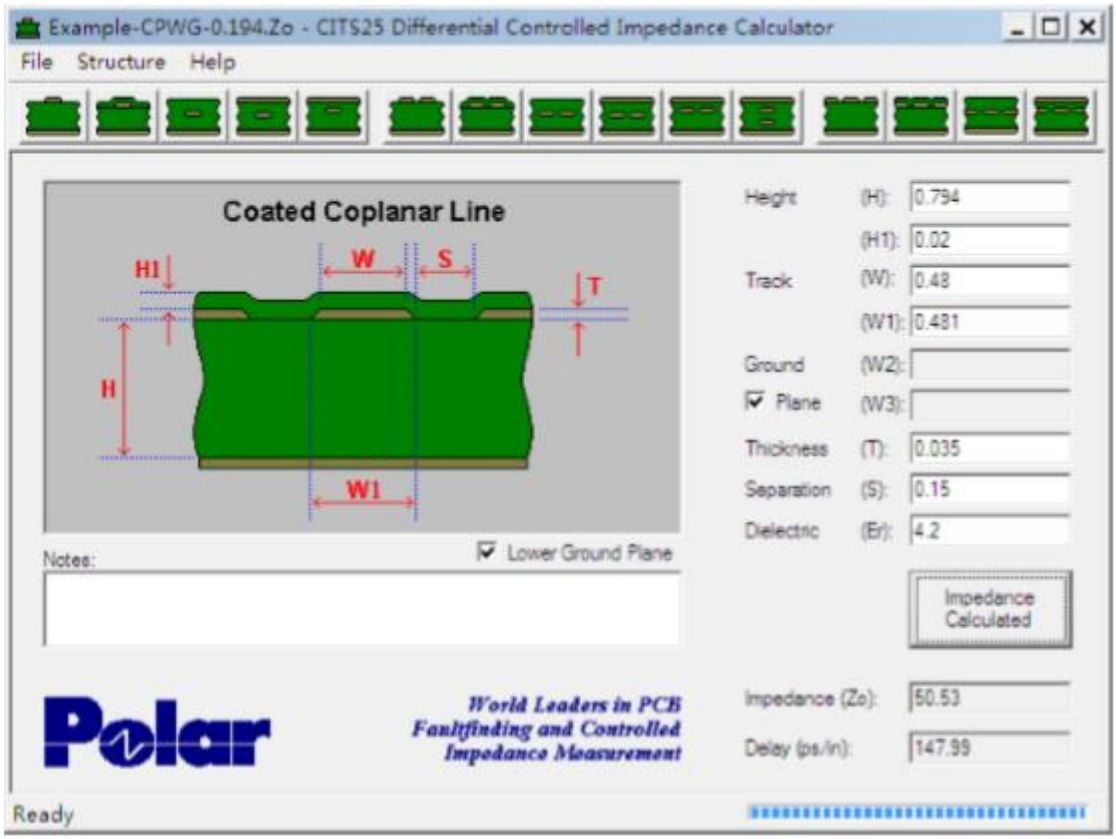


2、the RF trace of the test board which was used in the FCC test is defined as below.

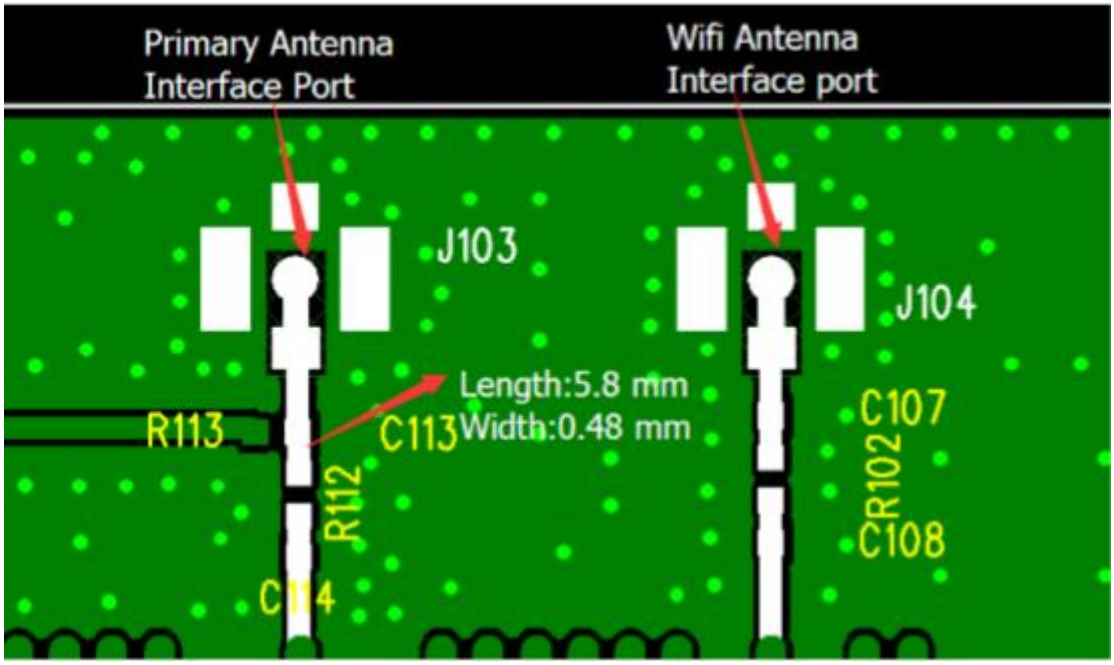


3、the characteristic impedence depends on the dielectric of PCB, the trace width and the grand plane spacing,Coated Coplanar Line is required.the detail simulation as below.

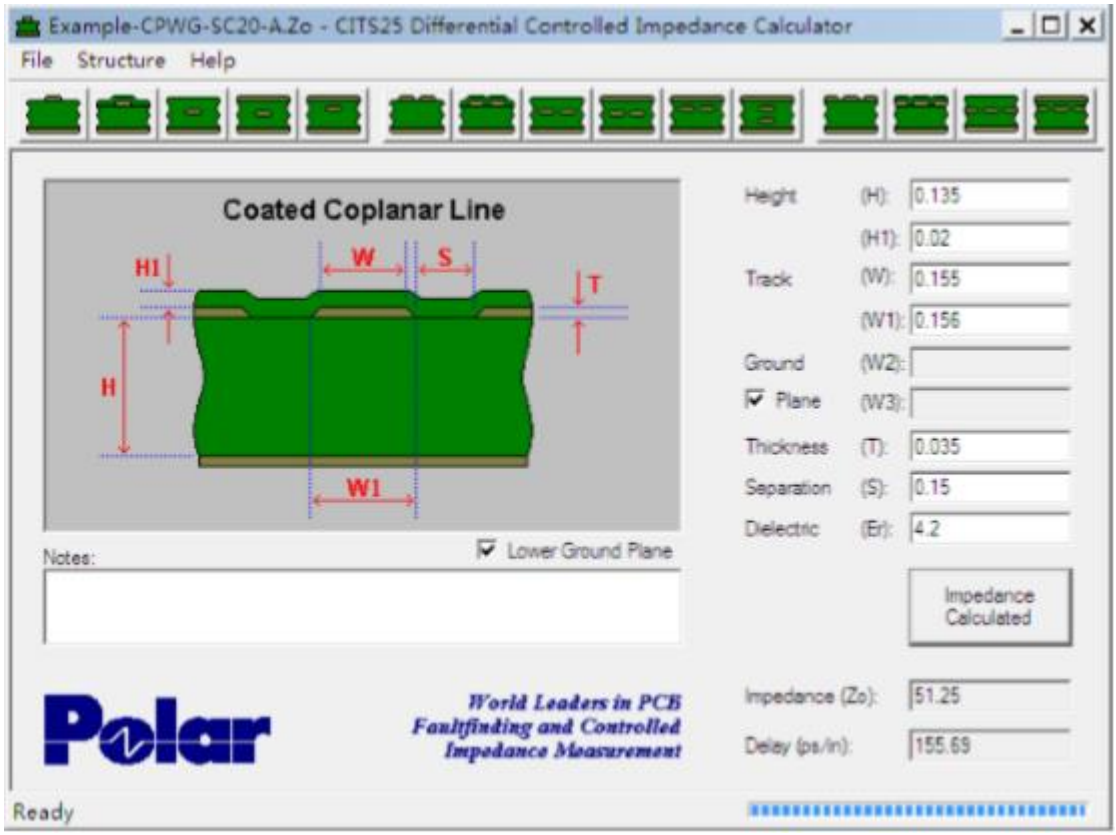

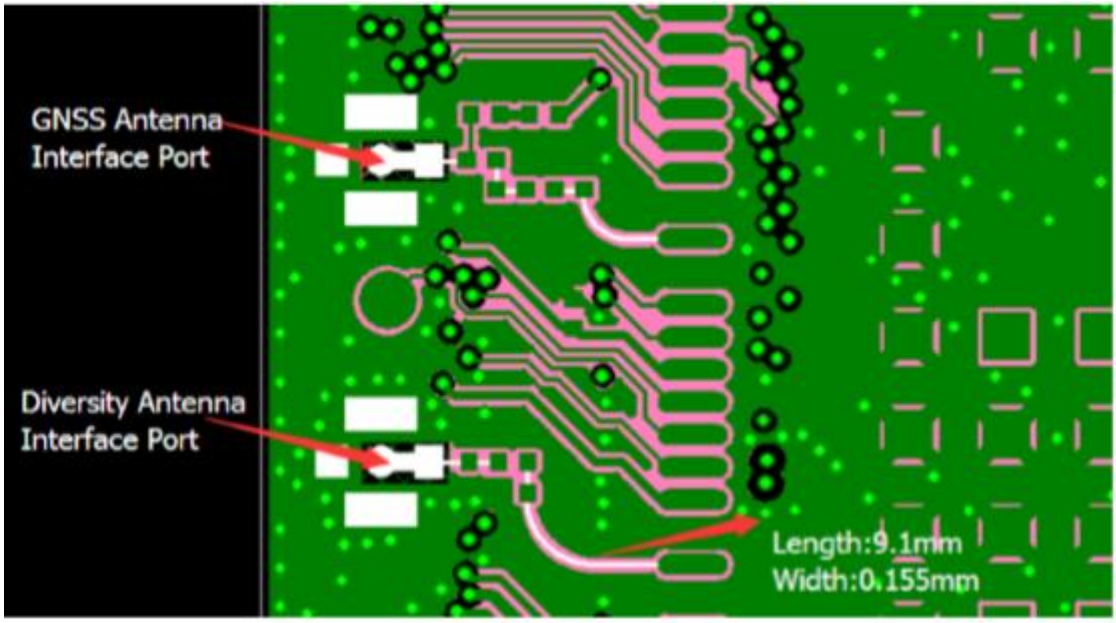
4、the RF trace of the test board which was used in the FCC test is defined as below.