Internal Antenna Product Specification

Project Name: 4G-LTE External Antenna

Part Number: **SAA30968A**

VENDOR NAME: Shanghai Saintenna Electronic Technology Co., Ltd.

Tel: 021-36307272 **Fax: 021-36307757**

Rev	Change Summary	Date	Author
1.0	Preliminary Release	2014-07-26	Kevin Cui

PREPARED BY

上海圣丹纳电子科技股份有限公司

Shanghai Saintenna Electronic Technology Co., Ltd.

2005 © COPYRIGHT SAINTENNA CO. LTD.

This document is issued by Saintenna Electronic Technology Co. Ltd. (hereinafter called Saintenna) in confidence, and is not to be reproduced in whole or in part without the prior written permission of Saintenna. The information contained herein is the property of Saintenna and is to be used only for the purpose for which it is submitted and is not to be released in whole or in part without the prior written permission of Saintenna.

Catalog

Project / content	No.
1. Cover	1
2. Catalog	2
3. Product chart	3
4. Antenna standard parameters	4
5. Electrical performance test report	5-7
6. RoHS	8

由 Autodesk 教育版产品制作

黑色	SAA30968A

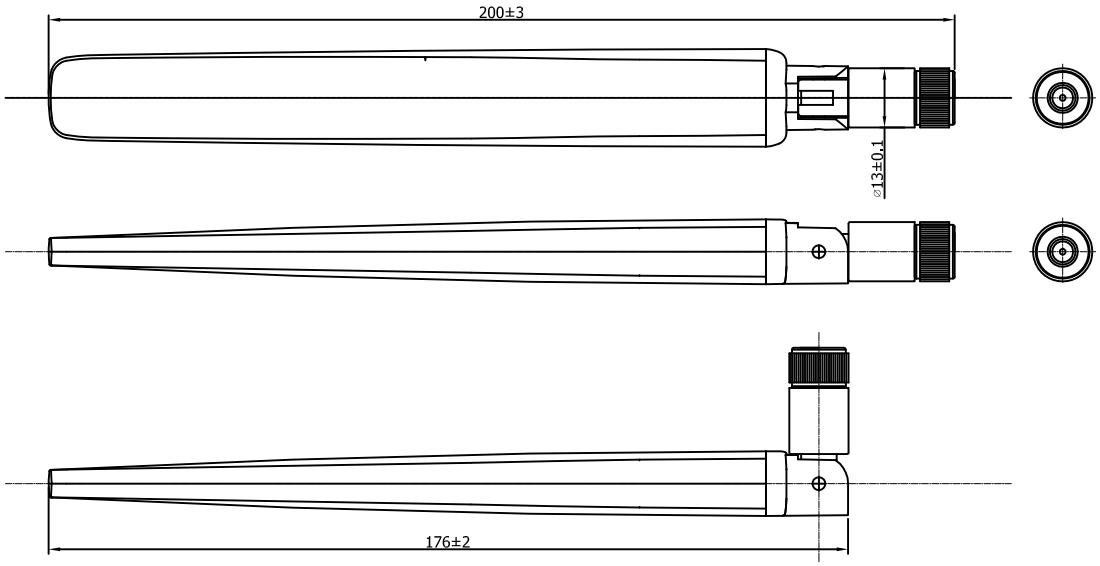

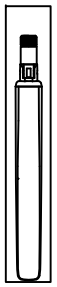

Packing:1PCS/Bag

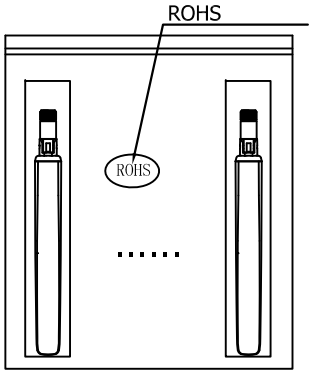

Packing:30PCS/Bag

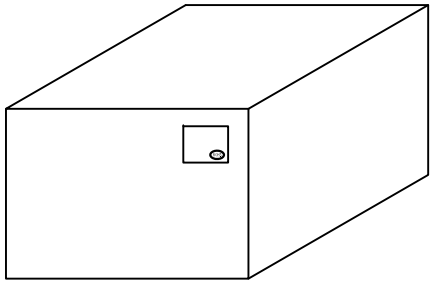

NO.	DESCRIPTION		Q'TY	REMARK
6	Connector	SMA Straight Plug Standard for RG-178	1	
5	Cable	RG-178 Cable,Transparency Brown,50Ω	1	
4	Rivet	PBT+PC,Color:Black	2	
3	Bottom Base	PBT+PC,Color:Black	1	
2	Upper Base	ABS,Color:Black	1	
1	Antenna Cap(L)	ABS,Color:Black	1	

DWG: SAA30968A	SDN-4G-EXT-D01		
PG: 1/1		S1	2016.06.22
UNIT: mm	MATERIAL: SEE NOTES	REV	DATE
SCALE:1.000	DR :mayuxue	2016.06.22	TOL,UNLESS NOTED .X: ±0.20 .XX: ±0.10 ANGULAR ±30′
THIRD PROJECTION:	CH:		
SAINTENNA	CONFIDENTIAL ALL INFORMATION CONTAINED IN THIS DOCUMENT IS PROPRIETARY,IT MAY NOT BE REPRODUCED OR USED WITHOUT EXPRESS WRITTENPERMISSION OF SAINTENNA CO,LTD.		
P H:66136101 FAX:66136102			

由 Autodesk 教育版产品制作
由 Autodesk 教育版产品制作
由 Autodesk 教育版产品制作

Standard parameter

一、Specifications

Frequency range	699~960MHz/1710~2700MHz
S.W.R	≤3
Gain	4.0dBi
Connector	SMA Plug
Impedance	50 Ohm

二、Reliability test

Project	Test condition	Result
Storage environment	Temperature, humidity, air pressure test are as follows: 1.Temperature: -30℃～+80℃ 2.Humidity: 45%-85% 3.Pressure: 86kpa-106kpa	Normal electrical and mechanical properties
High and low temperature test	The 5 cycle is between 70℃ and 40℃. Then check the appearance quality	Meet the mechanical and electrical properties
Resistance to constant damp heat test	Humidity 95 + 3%, temperature: 40 degrees Celsius. Continuous 2H,	Meet the mechanical and electrical properties
vibration test	Vibration frequency 10-55HZ, displacement: 0.35MM, acceleration: 50.0M/S, Frequency sweep frequency: 30 times	Normal electrical and mechanical properties
Drop test	1m height drop	Normal electrical and mechanical properties
Drawing force test	Push pull tester to test the strength of the instrument: ≧10N	Normal electrical and mechanical properties
Voltage resistance	1.Insulation spark voltage 1.5KV 2.Sheath spark voltage 1.5KV 3.Insulation resistance to sheath voltage 0.5KV	Normal electrical and mechanical properties

Shanghai Saintenna Electronic TechnologyCo.Ltd.

Company / project	External antenna	Working frequency band	All
Test date	2016/6/22	Test person	Victor Peng
Version number	V1.0	Test sample description	Mould

Free space test data of whole machine passive efficiency:

Freq	Gain	Efficiency
700	1.66	41.00%
710	3.26	49.30%
720	3.95	58.30%
730	3.6	58.10%
740	3.85	55.50%
750	4.04	54.40%
760	3.44	53.30%
770	3.98	57.30%
780	4.45	63.50%
790	3.63	66.00%
800	3.47	67.30%
810	3.19	62.40%
820	2.53	59.20%
830	2.13	57.60%
840	1.89	56.30%
850	2.29	57.10%
860	2.64	60.50%
870	3.01	61.20%
880	2.98	60.60%
890	2.46	57.00%
900	2.38	54.80%
910	2.06	52.30%
920	1.91	51.50%
930	2.06	51.30%
940	2.27	55.40%
950	2.04	54.10%

Freq	Gain	Efficiency
960	1.7	51.90%
970	1.23	47.10%
980	1	44.80%
990	0.82	41.90%
1000	1.17	40.70%
1700	1.67	63.40%
1720	1.94	62.90%
1740	2	64.80%
1760	1.57	60.40%
1780	0.97	56.80%
1800	1.33	55.90%
1820	1.17	56.20%
1840	1.36	55.70%
1860	1.25	51.40%
1880	1.38	49.90%
1900	1.59	51.70%
1920	1.36	52.00%
1940	1.01	49.40%
1960	1.41	51.60%
1980	1.53	53.20%
2000	1.84	52.70%
2020	2.1	50.40%
2040	2.65	54.50%
2060	3.22	56.90%
2080	3.69	56.60%
2100	4.01	59.20%

Freq	Gain	Efficiency
2120	3.69	59.60%
2140	3.22	56.00%
2160	2.46	52.20%
2180	1.45	47.30%
2300	1.25	46.90%
2320	1.49	50.10%
2340	1.49	50.60%
2360	1.49	49.90%
2380	1.57	51.90%
2400	1.88	54.40%
2420	2.15	57.80%
2440	2.85	60.80%
2460	3.35	64.80%
2480	3.6	69.50%

Freq	Gain	Efficiency
2500	3	67.00%
2520	2.68	68.00%
2540	2.44	68.80%
2560	2.3	66.30%
2580	2	59.90%
2600	2.04	60.30%
2620	2.06	61.10%
2640	2	60.70%
2660	1.71	59.90%
2680	1.71	58.60%
2700	1.78	59.00%

LOG MAG:

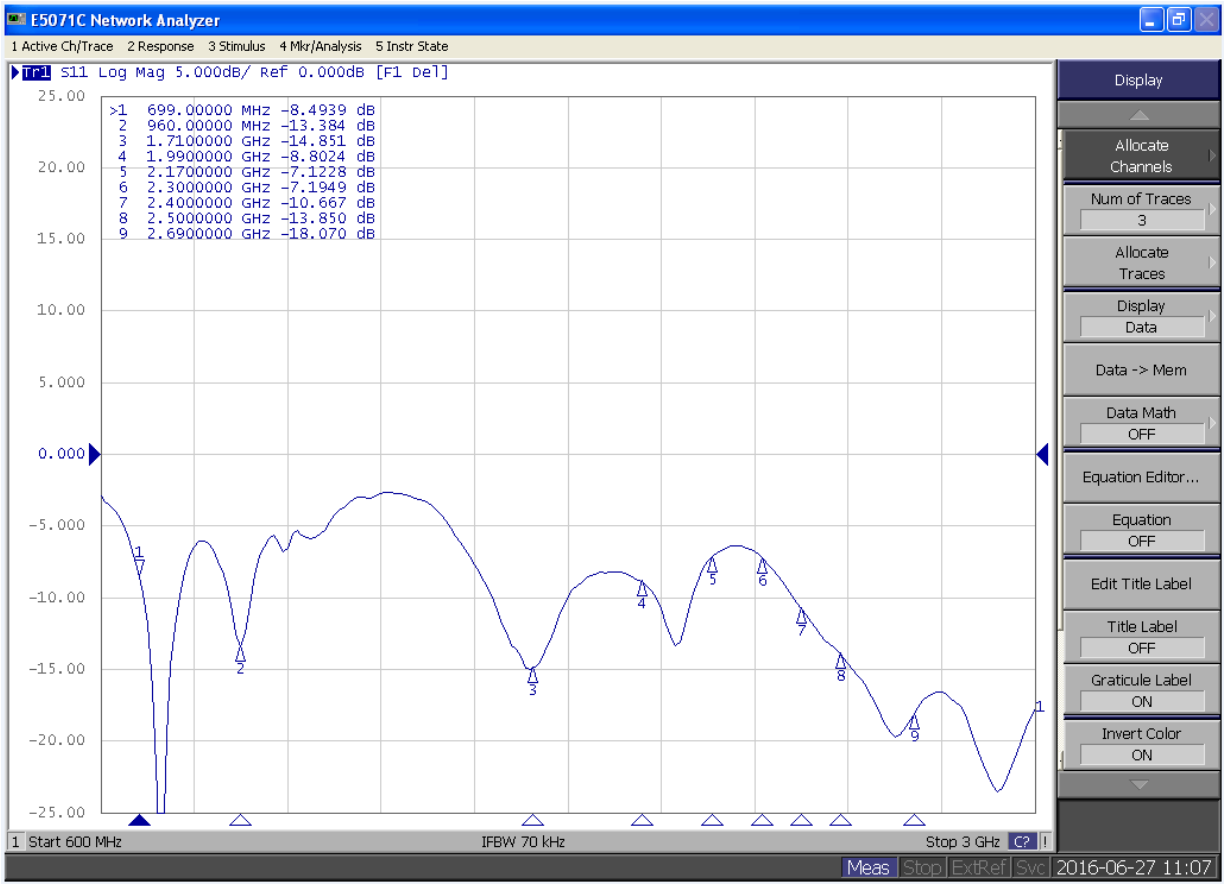

VSWR

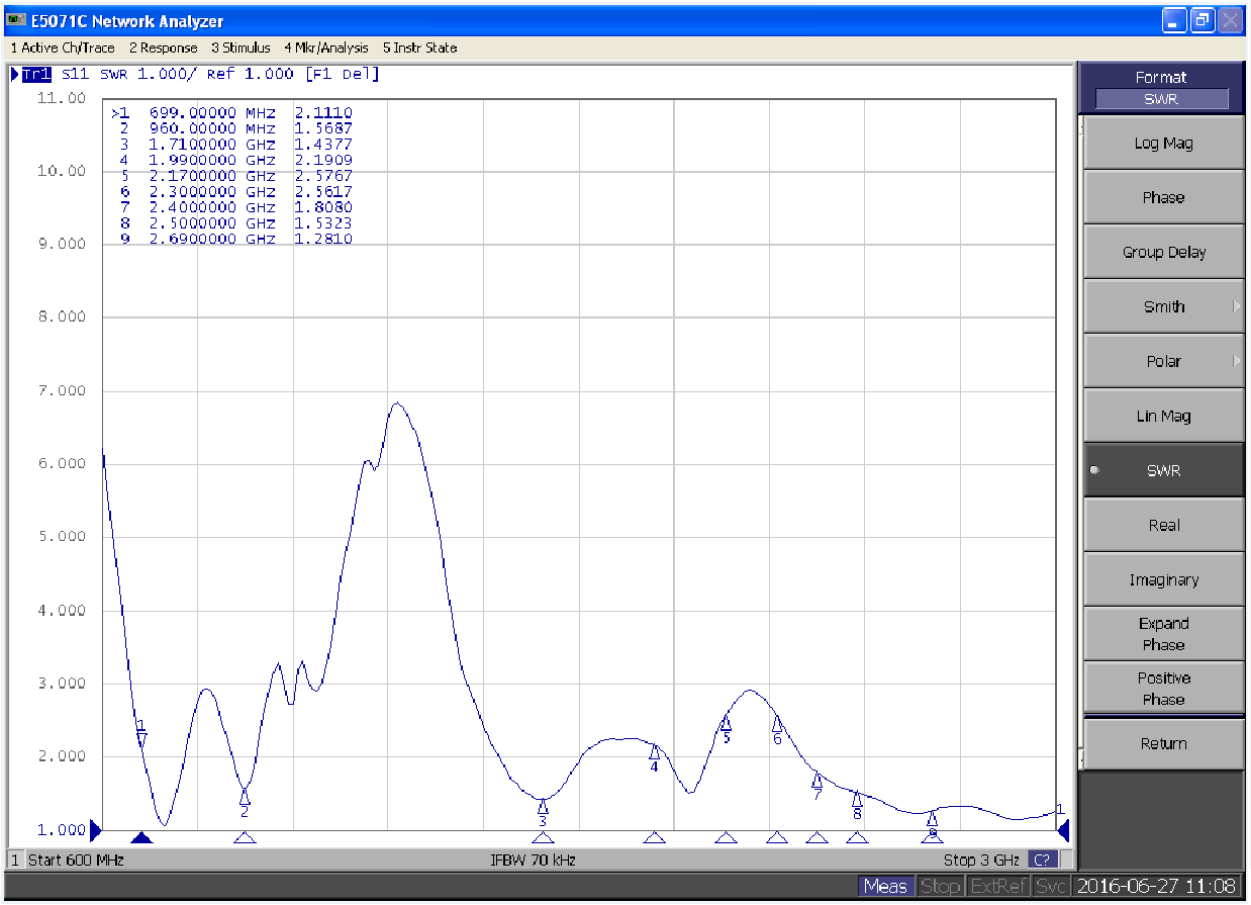
E5071C Network Analyzer
1 Active Ch/Trace 2 Response 3 Stimulus 4 Mkr/Analysis 5 Instr State
Tr1 S11 SWR 1.000/ Ref 1.000 [F1 Del]
>1 699.00000 MHz 2.1110
2 960.00000 MHz 1.5687
3 1.7100000 GHz 1.4377
4 1.9900000 GHz 2.1909
5 2.1700000 GHz 2.5767
6 2.3000000 GHz 2.5617
7 2.4000000 GHz 1.8080
8 2.5000000 GHz 1.5323
9 2.6900000 GHz 1.2810
11.00
10.00
9.000
8.000
7.000
6.000
5.000
4.000
3.000
2.000
1.000
1 Start 600 MHz
IFBW 70 kHz
Stop 3 GHz
Format
SWR
Log Mag
Phase
Group Delay
Smith
Polar
Lin Mag
SWR
Real
Imaginary
Expand Phase
Positive Phase
Return
Meas
Stop
ExtRef
Svc
2016-06-27 11:08

ROHS

Product :RF Antenna Assembly

Supplier Part No. (供應商料號)	ITEM (品名)	RAW MATERIAL (部件/原材料/輔助材料名稱)	RAW MATERIAL SUPPLIER (供應商名稱)	Cd(鎘)含量 (ppm)	Pb(鉛)含量 (ppm)	Cr6+(六價鉻) 含量(ppm)	Hg(汞) 含量 (ppm)	PBBS(聚溴聯苯) 含量 (ppm)	PBDES(溴聯苯醚)含量 (ppm)	Test organization 测试机构	Test report No. 測試報告號碼	SGS Report date
1	RG-178	Silver plated copper wire	JIANGSU YUANDA	N.D	N.D	Negative	N.D	N.D	N.D	CTI	ECL01H051755017	2015.10.23
		FEP		N.D	N.D	N.D	N.D	N.D	N.D			
		Tin plated copper wire		N.D	N.D	Negative	N.D	N.D	N.D			
		Brown color		N.D	N.D	N.D	N.D	N.D	N.D			
2	Rod sleeve	ABS	Chemical fiber	N.D	N.D	N.D	N.D	N.D	N.D	SGS	CE/2016/13616	2016.01.25
3	Fixed	PBT+PC	长春人造	N.D	N.D	N.D	N.D	N.D	N.D	SGS	CE/2015/C5211	2015.12.30
4	Solid	PBT+PC		N.D	N.D	N.D	N.D	N.D	N.D	SGS		
5	Connector	POM	Formosa	N.D	N.D	N.D	N.D	N.D	N.D	SGS	KE/2015/C2285A-01	2015.12.28
		NI-Plated	LIANFENG	N.D	N.D	Negative	N.D			SGS	CANEC1517911004	2015.10.26
		Gold-Plated	LIANFENG	N.D	N.D	Negative	N.D			SGS	CANEC1517911006	2015.10.26
		PTFE	求真	N.D	N.D	N.D	N.D	N.D	N.D	CTI	SCL01I013440001C	2016.03.07
		Brass	SHIYANG	14	31782	Negative	N.D			SGS	CANEC1603095201	2016.03.09
6	Toner	Black masterbatch	HEN-CHEN	N.D	N.D	N.D	N.D	N.D	N.D	SGS	CANEC1601390003	2016.01.28
7	PCB	FR4	Huake	N.D	N.D	N.D	N.D	N.D	N.D	SGS	SCL01H099132001C	2015.11.23