UG89

Hardware Design

UMTS/HSPA+ Module Series

Rev. UG89_Hardware_Design_V1.0

Date: 2020-07-12

Status: Preliminary

Our aim is to provide customers with timely and comprehensive service. For any assistance, please contact our company headquarters:

Quectel Wireless Solutions Co., Ltd.
Building 5, Shanghai Business Park Phase III (Area B), No.1016 Tianlin Road, Minhang District, Shanghai, China 200233
Tel: +86 21 5108 6236
Email: info@quectel.com

Or our local office. For more information, please visit:
http://www.quectel.com/support/sales.htm

For technical support, or to report documentation errors, please visit:
http://www.quectel.com/support/technical.htm
Or Email to: support@quectel.com

GENERAL NOTES

QUECTEL OFFERS THE INFORMATION AS A SERVICE TO ITS CUSTOMERS. THE INFORMATION PROVIDED IS BASED UPON CUSTOMERS' REQUIREMENTS. QUECTEL MAKES EVERY EFFORT TO ENSURE THE QUALITY OF THE INFORMATION IT MAKES AVAILABLE. QUECTEL DOES NOT MAKE ANY WARRANTY AS TO THE INFORMATION CONTAINED HEREIN, AND DOES NOT ACCEPT ANY LIABILITY FOR ANY INJURY, LOSS OR DAMAGE OF ANY KIND INCURRED BY USE OF OR RELIANCE UPON THE INFORMATION. ALL INFORMATION SUPPLIED HEREIN IS SUBJECT TO CHANGE WITHOUT PRIOR NOTICE.

COPYRIGHT

THE INFORMATION CONTAINED HERE IS PROPRIETARY TECHNICAL INFORMATION OF QUECTEL WIRELESS SOLUTIONS CO., LTD. TRANSMITTING, REPRODUCTION, DISSEMINATION AND EDITING OF THIS DOCUMENT AS WELL AS UTILIZATION OF THE CONTENT ARE FORBIDDEN WITHOUT PERMISSION. OFFENDERS WILL BE HELD LIABLE FOR PAYMENT OF DAMAGES. ALL RIGHTS ARE RESERVED IN THE EVENT OF A PATENT GRANT OR REGISTRATION OF A UTILITY MODEL OR DESIGN.

Copyright © Quectel Wireless Solutions Co., Ltd. 2020. All rights reserved.

About the Document

History

Revision	Date	Author	Description
1.0	2020-07-12	Woody	Initial

Contents

About the Document **2**
Contents **3**
Table Index **5**
Figure Index **6**

1 Introduction **7**
1.1. Safety Information 8

2 Product Concept **9**
2.1. General Description 9
2.2. Key Features 10
2.3. Functional Diagram 12
2.4. Evaluation Board 13

3 Application Interfaces **14**
3.1. General Description 14
3.2. Pin Assignment 15
3.3. Pin Description 16
3.4. Operating Modes 22
3.5. Power Supply 23
3.5.1. Power Supply Pins 23
3.5.2. Decrease Voltage Drop 23
3.5.3. Reference Design for Power Supply 24
3.6. Power-on/off/Reset Scenarios 25
3.6.1. Turn on the Module Using the PWRKEY 25
3.6.2. Turn off the Module 27
3.6.2.1. Turn off the Module Using the PWRKEY Pin 28
3.6.2.2. Turn off Module Using AT Command 28
3.6.3. Reset the Module 28
3.6.4. Automatic Shutdown* 30
3.6.4.1. Thermal Shutdown* 30
3.6.4.2. Undervoltage Shutdown* 31
3.6.4.3. Overvoltage Shutdown* 32
3.7. UART Interfaces 32
3.8. (U)SIM Interface 35
3.9. USB Interface 37
3.10. ADC Interfaces 38
3.11. PCM and I2C Interfaces 39
3.12. STATUS 41
3.13. Behaviors of the UART1_RI 42

4 Antenna Interface **44**
4.1. GSM/UMTS Antenna Interface 44
4.1.1. Pin Definition 44

4.1.2. Operating Frequency 44
4.1.3. Reference Design of RF Antenna Interface 45
4.1.4. Reference Design of RF Layout 45
4.2. Antenna Installation 48
4.2.1. Antenna Requirements 48
4.2.2. Recommended RF Connector for Antenna Installation 48

5 Electrical, Reliability and Radio Characteristics 50
5.1. Absolute Maximum Ratings 50
5.2. Power Supply Ratings 51
5.3. Operation and Storage Temperatures 51
5.4. Current Consumption 52
5.5. RF Output Power 54
5.6. RF Receiving Sensitivity 54
5.7. Electrostatic Discharge 55

6 Mechanical Dimensions 56
6.1. Mechanical Dimensions of the Module 56
6.2. Recommended Footprint Design 58
6.3. Top and Bottom Views of the Module 59

7 Storage, Manufacturing and Packaging 61
7.1. Storage 61
7.2. Manufacturing and Soldering 62
7.3. Packaging 63

8 Appendix A References 64
9 Appendix B GPRS Coding Schemes 68
10 Appendix C GPRS Multi-slot Classes 69
11 Appendix D EDGE Modulation and Coding Schemes 71
12 Appendix E Certification List 72

Table Index

Table 1: UG89 Frequency Bands 9
Table 2: P/N Information 9
Table 3: Key Features of UG89 Module 10
Table 4: I/O Parameters Definition 16
Table 5: Pin Description 16
Table 6: Overview of Operating Modes 22
Table 7: VBAT and GND Pins 23
Table 8: Pin Description of PWRKEY 25
Table 9: Pin Description of RESET_N 29
Table 10: Temperature dependent behavior 31
Table 11: Pin Definition of the UART1 Interface 32
Table 12: Pin Definition of the Debug UART Interface 33
Table 13: Logic Levels of Digital I/O 33
Table 14: Pin Definition of the (U)SIM Card Interface 35
Table 15: Pin Description of USB Interface 37
Table 16: Pin Definition of the ADC Interfaces 39
Table 17: Characteristic of the ADC 39
Table 18: Pin Definition of PCM and I2C Interfaces 40
Table 19: Pin Definition of STATUS 41
Table 20: Behaviors of the UART1_RI 43
Table 21: Pin Definition of RF Antenna 44
Table 22: Module Operating Frequencies 44
Table 23: Antenna Requirements 48
Table 24: Absolute Maximum Ratings 50
Table 25: The Module Power Supply Ratings 51
Table 26: Operation and Storage Temperatures 51
Table 27: UG89 Current Consumption 52
Table 28: RF Output Power 54
Table 29： UG89 Conducted RF Receiving Sensitivity 54
Table 30: Electrostatics Discharge Characteristics (Temperature=25 ºC, Humidity=45%) 55
Table 31: Recommended Thermal Profile Parameters 62
Table 32: Related Documents 64
Table 33: Terms and Abbreviations 64
Table 34: Description of Different Coding Schemes 68
Table 35: GPRS Multi-slot Classes 69
Table 36: EDGE Modulation and Coding Schemes 71
Table 37: Certification List 72

Figure Index

Figure 1: Functional Diagram 13
Figure 2: Pin Assignment (Bottom View) 15
Figure 3: Voltage Drop during Burst Transmission 24
Figure 4: Star Structure of the Power Supply 24
Figure 5: Reference Circuit of Power Supply 25
Figure 6: Reference Circuit of Turing on the Module Using Driving Circuit 26
Figure 7: Reference Circuit of Turing on the Module Using Keystroke 26
Figure 8: Timing of Turning on the Module 27
Figure 9: Timing of Turning off the Module 28
Figure 10: Reference Circuit of Resetting the Module by Using Driving Circuit 29
Figure 11: Reference Circuit of Resetting the Module by Using Button 29
Figure 12: Timing of Resetting Module 30
Figure 13: Reference Circuit with a Level Translator Chip 34
Figure 14: Reference Circuit with a Transistor Circuit 34
Figure 15: Reference Circuit of (U)SIM Interface with an 8-pin (U)SIM Card Connector 36
Figure 16: Reference Circuit of (U)SIM Interface with a 6-pin (U)SIM Card Connector 36
Figure 17: Reference Circuit of USB Application 38
Figure 18: Primary Mode Timing 40
Figure 19: Reference Circuit of PCM Application with Audio Codec 41
Figure 20: Reference Circuits of STATUS 42
Figure 21: Reference Circuit of RF Antenna Interface 45
Figure 22: Microstrip Design on a 2-layer PCB 46
Figure 23: Coplanar Waveguide Design on a 2-layer PCB 46
Figure 24: Coplanar Waveguide Design on a 4-layer PCB (Layer 3 as Reference Ground) 46
Figure 25: Coplanar Waveguide Design on a 4-layer PCB (Layer 4 as Reference Ground) 47
Figure 26: Dimensions of the U.FL-R-SMT Connector (Unit: mm) 48
Figure 27: Mechanicals of U.FL-LP Connectors 49
Figure 28: Space Factor of Mated Connector (Unit: mm) 49
Figure 29: Module Top and Side Dimensions 56
Figure 30: Module Bottom Dimensions (Top View) 57
Figure 31: Recommended Footprint (Top View) 58
Figure 32: Top View of the Module 59
Figure 33: Bottom View of the Module 59
Figure 34: Reflow Soldering Thermal Profile 62

1 Introduction

This document defines UG89 module and describes its air interface and hardware interface which are connected with customers' applications.

This document helps customers quickly understand module interface specifications, electrical and mechanical details, as well as other related information of UG89 module. Associated with application note and user guide, customers can use UG89 module to design and set up mobile applications easily.

1.1. Safety Information

The following safety precautions must be observed during all phases of operation, such as usage, service or repair of any cellular terminal or mobile incorporating UG89 module. Manufacturers of the cellular terminal should send the following safety information to users and operating personnel, and incorporate these guidelines into all manuals supplied with the product. If not so, Quectel assumes no liability for customers' failure to comply with these precautions.

	Full attention must be given to driving at all times in order to reduce the risk of an accident. Using a mobile while driving (even with a handsfree kit) causes distraction and can lead to an accident. Please comply with laws and regulations restricting the use of wireless devices while driving.
	Switch off the cellular terminal or mobile before boarding an aircraft. The operation of wireless appliances in an aircraft is forbidden to prevent interference with communication systems. If the device offers an Airplane Mode, then it should be enabled prior to boarding an aircraft. Please consult the airline staff for more restrictions on the use of wireless devices on boarding the aircraft.
	Wireless devices may cause interference on sensitive medical equipment, so please be aware of the restrictions on the use of wireless devices when in hospitals, clinics or other healthcare facilities.
	The cellular terminal or mobile contains a transmitter and receiver. When it is ON, it receives and transmits radio frequency signals. RF interference can occur if it is used close to TV set, radio, computer or other electric equipment.
	In locations with potentially explosive atmospheres, obey all posted signs to turn off wireless devices such as your phone or other cellular terminals. Areas with potentially explosive atmospheres include fuelling areas, below decks on boats, fuel or chemical transfer or storage facilities, areas where the air contains chemicals or particles such as grain, dust or metal powders, etc.

2 Product Concept

2.1. General Description

UG89 is a WCDMA/GSM wireless communication module. Its general features are listed below：

- Support HSDPA, HSUPA, HSPA+, WCDMA, EDGE, GSM and GPRS coverage.
- Provide audio support for customers' specific applications.

Table 1: UG89 Frequency Bands

Type	Frequency Bands
WCDMA	B1/B2/B5/B6/B8
GSM	850/900/1800/1900MHz

With a compact profile of 27.6mm × 25.4mm × 2.2mm, UG89 can meet almost all requirements of M2M applications such as wireless POS, metering, telematics, security, industry PDA/PC and tablet, etc.

UG89 is an SMD-type module, which can be embedded in application through its 120 LGA pins.

UG89 is integrated with internet service protocols like TCP, UDP and PPP. Extended AT commands have been developed for customers to use these internet service protocols easily.

The following table shows the P/N information of UG89.

Table 2: P/N Information

Part Description	VFI P/N	Quectel ordering P/N
UG89ASR – Blank IMEI	RAD268-024-01-A	UG89TA-128-VFI
UG89ASR – Quectel's IMEI	RAD268-024-02-A	UG89TA-128-STD

2.2. Key Features

The following table describes the detailed features of UG89 module.

Table 3: Key Features of UG89 Module

Feature	Details
Power Supply	Supply voltage: 3.3V~4.5V Typical supply voltage: 3.8V
Transmitting Power	Class 4 (33dBm±2dB) for GSM850/EGSM900 Class 1 (30dBm±2dB) for DCS1800/PCS1900 Class E2 (27dBm±3dB) for GSM850/EGSM900 8-PSK Class E2 (26dBm±3dB) for DCS1800/PCS1900 8-PSK Class 3 (24dBm+1/-3dB) for WCDMA bands
UMTS Features	Support 3GPP R7 HSDPA, HSPA+, HSUPA and WCDMA Support QPSK, 16-QAM (DL only) modulation HSPA+: Max 21Mbps (DL) HSUPA: Max 5.76Mbps (UL) WCDMA: Max 384Kbps (DL), Max 384Kbps (UL)
GSM Features	**GPRS** ● Support GPRS multi-slot class 12 ● Coding schemes: CS-1, CS-2, CS-3 and CS-4 ● Max 85.6Kbps (DL), Max 85.6Kbps (UL) **EDGE** ● Support EDGE multi-slot class 12 ● Support GMSK and 8-PSK for different MCS (Modulation and Coding Scheme) ● Downlink coding schemes: CS 1-4 and MCS 1-9 ● Uplink coding schemes: CS 1-4 and MCS 1-9 ● Max 236.8Kbps (DL), Max 236.8Kbps (UL)
Internet Protocol Features	Support TCP/UDP/PPP/NTP/NITZ/FTP/HTTP/PING/CMUX/HTTPS/FTPS/SSL/FILE/MQTT/SMTP*/MMS*/SMTPS* protocols Support PAP (Password Authentication Protocol) and CHAP (Challenge Handshake Authentication Protocol) protocols which as usually used for PPP connection
SMS	Text and PDU modes Point-to-point MO and MT SMS cell broadcast SMS storage: (U)SIM card currently
USIM Interface	Support USIM/SIM card: 1.8V/3.0V

PCM Interface	Used for audio function with an external codec chip Support 16-bit linear data format Support short frame synchronization Support master and slave modes
USB Interface	Compliant with USB 2.0 specification (slave only), with transmission rates up to 480Mbps Used for AT command communication, data transmission, software debugging and firmware upgrade Support USB serial drivers for: ● Windows 7/8/8.1/10 ● Windows CE 5.0/6.0/7.0* ● Linux 2.6~5.0 ● Android 4.x/5.x/6.x/7.x/8.x/9.x
UART Interface	**UART1** ● Used for AT command communication and data transmission ● Baud rate reach up to 1Mbps; 115200bps by default ● Support RTS and CTS hardware flow control **UART2** ● Used for Linux console, log output ● 115200bps baud rate
I2C Interfaces	Compliant with I2C specification version 5.0 Multi-master is not supported Used for codec configuration by default
AT Commands	Compliant with 3GPP TS 27.007, 27.005 and Quectel enhanced AT commands
Real Time Clock	Support
Antenna Interface	GSM/UMTS antenna, 50Ω
Physical Characteristics	Size: (25.4±0.15)mm × (27.6±0.15)mm × (2.2±0.2)mm Package: LGA Weight: TBD
Temperature Range	Operation temperature range: -35°C ~ +75°C[1)] Extended temperature range: -40°C ~ +85°C[2)] Storage temperature range: -40°C ~ +90°C
Firmware Upgrade	USB interface or UART interface
RoHS	All hardware components are fully compliant with EU RoHS directive

NOTES

1. [1)] Within the operation temperature range, the module is 3GPP compliant.
2. [2)] Within the extended temperature range, the module remains the ability to establish and maintain a voice, SMS, data transmission, emergency call, etc. There is no unrecoverable malfunction. There are also no effects on radio spectrum and no harm to radio network. Only one or more parameters like P_{out} might reduce their value and exceed the specified tolerances. When the temperature returns to the normal operating temperature levels, the module will meet 3GPP specifications again.
3. "*" means under development.

2.3. Functional Diagram

The following figure shows a block diagram of UG89 and illustrates the major functional parts.

- RF transceiver
- Baseband
- Flash
- Radio frequency
- Peripheral interfaces
  —UART interface
  —(U)SIM interface
  —USB interface
  —PCM interface
  —I2C interface
  —Status indication

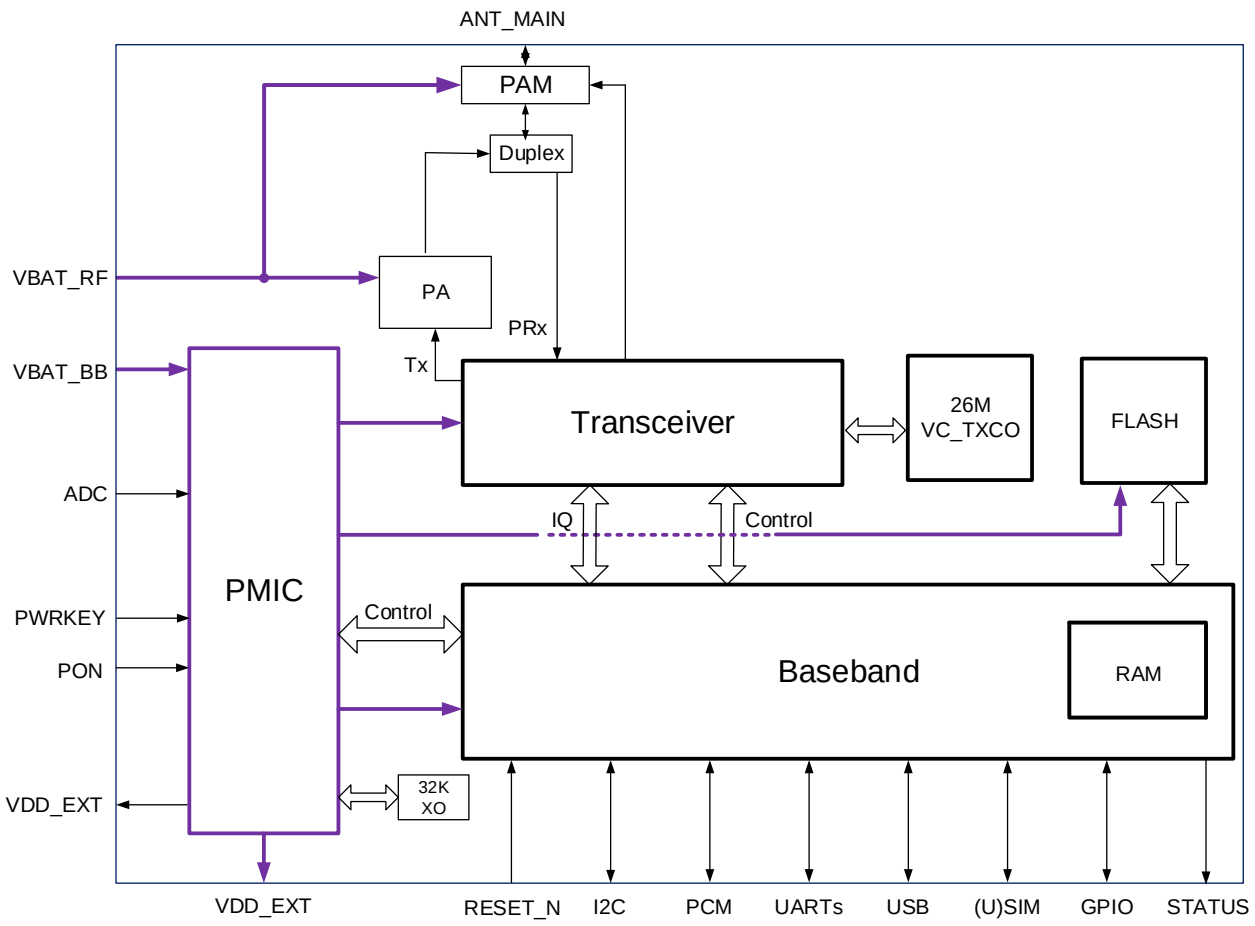

Figure 1: Functional Diagram

2.4. Evaluation Board

In order to help customers to develop applications with UG89, Quectel provides an evaluation board (EVB), USB to RS-232 converter cable, earphone, antenna and other peripherals to control or test the module. For more details, please refer to ***document [4]***.

3 Application Interfaces

3.1. General Description

UG89 is equipped with 120 pins that can be connected to customers' cellular application platforms. Sub-interfaces included in these pins are described in detail in the following chapters:

- Power supply
- UART interface
- (U)SIM interface
- USB interface
- ADC interface
- PCM and I2C interfaces
- Status indication

3.2. Pin Assignment

The following figure shows the pin assignment of UG89 module.

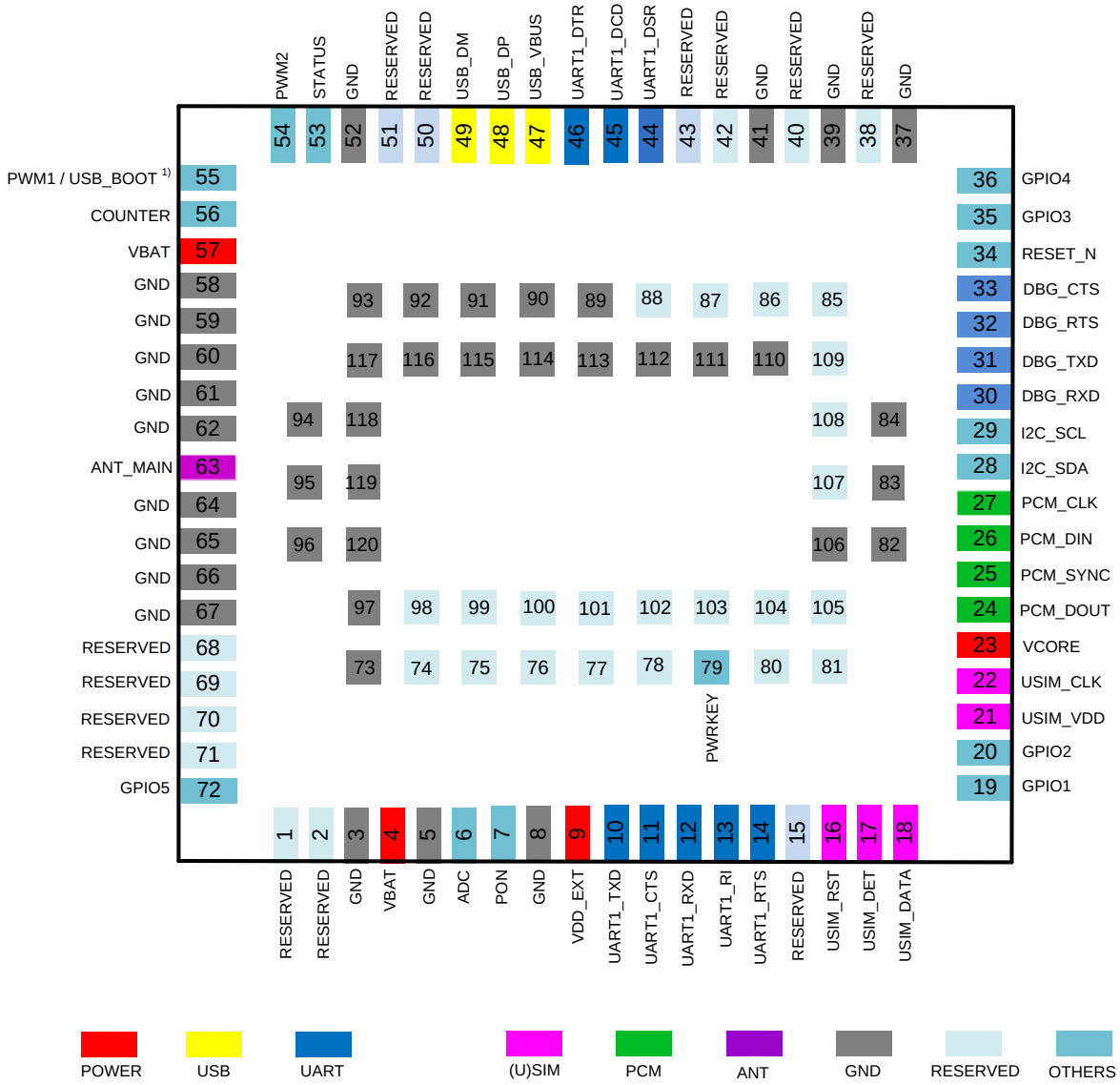

Figure 2: Pin Assignment (Bottom View)

NOTES

1. If PCM_CLK, and I2C_SCL are not used, it is recommended to mount a 33pF capacitor close to each of the three pins to prevent interference from affecting RF's performance. Other unused pins and RESERVED pins should be kept open, and all GND pins should be connected to the ground.
   1) means that these pins cannot be pulled up before startup.

3.3. Pin Description

The following tables show the pin definition of UG89 module.

Table 4: I/O Parameters Definition

Type	Description
AI	Analog Input
AO	Analog Output
DI	Digital Input
DO	Digital Output
IO	Bidirectional
OD	Open Drain
PI	Power Input
PO	Power Output

Table 5: Pin Description

Power Supply					
Pin Name	**Pin No.**	**I/O**	**Description**	**DC Characteristics**	**Comment**
VBAT	4, 57	PI	Power supply for module	Vmax=4.5V Vmin=3.3V Vnorm=3.8V	It must be able to provide sufficient current in a transmitting burst which typically rises to 2.0A.
VDD_EXT	9	PO	Provide 1.8V for external circuit	Vnorm=1.8V $I_O$max=50mA	Power supply for external GPIO's pull up circuits. If unused, keep it open.
VCORE	23	PO	Provide 1.2V for external circuit	Vnorm=1.2V Iomax=10mA	VCORE can be used for the power indication circuit.

					If unused, keep it open.
GND	3, 5, 8,37, 39, 41, 52, 58~62, 64~67, 73 82~84, 89~97, 106 110~120		Ground		
Turn On/Off					
Pin Name	**Pin No.**	**I/O**	**Description**	**DC Characteristics**	**Comment**
PON	7	DI	Turn on the module		High pulse. Set this signal low before and after the startup impulse.
PWRKEY	79	DI	Turn on/off the module	V_{IL}max=0.5V	VBAT power domain.
RESET_N	34	DI	Reset the module Active Low.	V_{IL}max=0.5V	If unused, keep it open.
Status Indication					
Pin Name	**Pin No.**	**I/O**	**Description**	**DC Characteristics**	**Comment**
STATUS	53	DO	Indicate the module's operation status	V_{OL}max=0.45V V_{OH}min=1.35V	1.8V power domain. If unused, keep it open.
USB Interface					
Pin Name	**Pin No.**	**I/O**	**Description**	**DC Characteristics**	**Comment**
USB_VBUS	47	AI	USB connection detection	Vmax=5.25V Vmin=3.0V Vnorm=5.0V	Typical: 5.0V If unused, keep it open.
USB_DP	48	IO	USB differential data bus (+)		USB 2.0 compliant; 90Ω differential impedance; If unused, keep it open.
USB_DM	49	IO	USB differential data bus (-)		USB 2.0 compliant; 90Ω differential impedance. If unused, keep it

					open.
(U)SIM Interface					
Pin Name	**Pin No.**	**I/O**	**Description**	**DC Characteristics**	**Comment**
USIM_VDD	21	PO	Power supply for (U)SIM card	Iomax=50mA **For 1.8V (U)SIM:** Vmax=1.9V Vmin=1.7V **For 3.0V (U)SIM:** Vmax=3.05V Vmin=2.7V	Either 1.8V or 3.0V (U)SIM card is supported and can be identified automatically by the module.
USIM_DATA	18	IO	(U)SIM card data	**For 1.8V (U)SIM:** V_{IL}max=0.6V V_{IH}min=1.2V V_{OL}max=0.45V V_{OH}min=1.35V **For 3.0V (U)SIM:** V_{IL}max=1.0V V_{IH}min=1.95V V_{OL}max=0.45V V_{OH}min=2.55V	
USIM_CLK	22	DO	(U)SIM card clock	**For 1.8V (U)SIM:** V_{OL}max=0.45V V_{OH}min=1.35V **For 3.0V (U)SIM:** V_{OL}max=0.45V V_{OH}min=2.55V	
USIM_RST	16	DO	(U)SIM card reset	**For 1.8V (U)SIM:** V_{OL}max=0.45V V_{OH}min=1.35V **For 3.0V (U)SIM:** V_{OL}max=0.45V V_{OH}min=2.55V	
USIM_DET	17	DI	(U)SIM card hot-plug detect	V_{IL}min=-0.3V V_{IL}max=0.6V V_{IH}min=1.2V V_{IH}max=2.0V	1.8V power domain. If unused, keep it open.

UART1 Interface					
Pin Name	**Pin No.**	**I/O**	**Description**	**DC Characteristics**	**Comment**
UART1_RI	13	DO	Ring indicator	V_{OL}max=0.45V V_{OH}min=1.35V	1.8V power domain. If unused, keep it open.
UART1_DCD	45	DO	Data carrier detection	V_{OL}max=0.45V V_{OH}min=1.35V	1.8V power domain. If unused, keep it open.
UART1_CTS	11	DO	Clear to send from DTE	V_{OL}max=0.45V V_{OH}min=1.35V	1.8V power domain. If unused, keep it open.
UART1_RTS	14	DI	Request to send from DTE	V_{IL}min=-0.3V V_{IL}max=0.6V V_{IH}min=1.2V V_{IH}max=2.0V	1.8V power domain. If unused, keep it open.
UART1_DTR	46	DI	Data terminal ready. Sleep mode control.	V_{IL}min=-0.3V V_{IL}max=0.6V V_{IH}min=1.2V V_{IH}max=2.0V	1.8V power domain. If unused, keep it open.
UART1_TXD	10	DO	Transmit data	V_{OL}max=0.45V V_{OH}min=1.35V	1.8V power domain. If unused, keep it open.
UART1_RXD	12	DI	Receive data	V_{IL}min=-0.3V V_{IL}max=0.6V V_{IH}min=1.2V V_{IH}max=2.0V	1.8V power domain. If unused, keep it open.
UART1_DSR	44	DO	Data set ready	V_{OL}max=0.45V V_{OH}min=1.35V	1.8V power domain. If unused, keep it open.
Debug UART Interface					
Pin Name	**Pin No.**	**I/O**	**Description**	**DC Characteristics**	**Comment**
DBG_RXD	30	DI	Debug receive data	V_{IL}min=-0.3V V_{IL}max=0.6V V_{IH}min=1.2V V_{IH}max=2.0V	1.8V power domain. If unused, keep it open.
DBG_TXD	31	DO	Debug transmit data	V_{OL}max=0.45V V_{OH}min=1.35V	1.8V power domain. If unused, keep it open.
DBG_RTS	32	DI	Debug request to send	V_{IL}min=-0.3V V_{IL}max=0.6V	1.8V power domain. If unused, keep it

				V_{IH}min=1.2V V_{IH}max=2.0V	open.
DBG_CTS	33	DO	Debug clear to send	V_{OL}max=0.45V V_{OH}min=1.35V	1.8V power domain. If unused, keep it open.
RF Interface					
Pin Name	**Pin No.**	**I/O**	**Description**	**DC Characteristics**	**Comment**
ANT_MAIN	63	IO	Main antenna		50Ω impedance
ADC Interface					
Pin Name	**Pin No**	**I/O**	**Description**	**DC Characteristics**	**Comment**
ADC	6	AI	General purpose analog to digital converter interface	Voltage range: 0V to 1.2	If unused, keep it open.
PCM Interface					
Pin Name	**Pin No.**	**I/O**	**Description**	**DC Characteristics**	**Comment**
PCM_DIN	26	DI	PCM data input	V_{IL}min=-0.3V V_{IL}max=0.6V V_{IH}min=1.2V V_{IH}max=2.0V	1.8V power domain. If unused, keep it open.
PCM_DOUT	24	DO	PCM data output	V_{OL}max=0.45V V_{OH}min=1.35V	1.8V power domain. If unused, keep it open.
PCM_SYNC	25	IO	PCM data frame synchronization signal	V_{OL}max=0.45V V_{OH}min=1.35V V_{IL}min=-0.3V V_{IL}max=0.6V V_{IH}min=1.2V V_{IH}max=2.0V	1.8V power domain. In master mode, it serves as an output signal. In slave mode, it serves as an input signal. If unused, keep it open.
PCM_CLK	27	IO	PCM data bit clock	V_{OL}max=0.45V V_{OH}min=1.35V V_{IL}min=-0.3V V_{IL}max=0.6V V_{IH}min=1.2V V_{IH}max=2.0V	1.8V power domain. In master mode, it serves as an output signal. In slave mode, it serves as an input signal. If unused, it is recommended to mount a 33pF

					capacitor close to the pin.
I2C Interface					
Pin Name	**Pin No.**	**I/O**	**Description**	**DC Characteristics**	**Comment**
I2C_SDA	28	OD	I2C serial clock. Used for external codec		An external 1.8V pull-up resistor is required. If unused, keep it open.
I2C_SCL	29	OD	I2C serial data. Used for external codec		An external 1.8V pull-up resistor is required. If unused, it is recommended to mount a 33pF capacitor close to the pin.
GPIO Pins*					
Pin Name	**Pin No.**	**I/O**	**Description**	**DC Characteristics**	**Comment**
GPIO1	19	IO	General purpose input/output interface	V_{OL}max=0.45V V_{OH}min=1.35V V_{IL}min=-0.3V V_{IL}max=0.6V V_{IH}min=1.2V V_{IH}max=2.0V	1.8V power domain. If unused, keep the pins open.
GPIO2	20	IO			
GPIO3	35	IO			
GPIO4	36	IO			
GPIO5	72	IO			
Other Pins*					
Pin Name	**Pin No.**	**I/O**	**Description**	**DC Characteristics**	**Comment**
PWM1/USB_BOOT	55	DO	Pulse width modulation interface1 / Force the module to enter into emergency download mode	V_{OL}max=0.45V V_{OH}min=1.35V	1.8V power domain. If unused, keep it open. It is recommended to reserve test point.
PWM2	54	DO	Pulse width modulation interface2	V_{OL}max=0.45V V_{OH}min=1.35V	1.8V power domain. If unused, keep it open.

NOTE COUNTER	56	DI	Pulse Counter	V_{IL}min=-0.3V V_{IL}max=0.6V V_{IH}min=1.2V V_{IH}max=2.0V	1.8V power domain. If unused, keep it open.
RESERVED Pins					
Pin Name	**Pin No.**	**I/O**	**Description**	**DC Characteristics**	**Comment**
RESERVED	1, 2, 15, 38, 40, 42, 43, 50, 51, 68~71, 74~78, 80, 81, 85~88, 98~105, 107~109		Reserved		Keep these pins unconnected.

"*" means under development.

3.4. Operating Modes

The following table briefly outlines the operating modes to be mentioned in the following sections.

Table 6: Overview of Operating Modes

Mode	Details	
Normal Operation	Idle	Software is active. The module has registered on the network, and it is ready to send and receive data.
	Talk/Data	A network connection is ongoing. In this mode, the power consumption is decided by the network setting and data transfer rate.
Minimum Functionality Mode	**AT+CFUN=0** command can set the module to a minimum functionality mode without removing the power supply. In this case, both the RF function and (U)SIM card will be invalid.	
Airplane Mode	**AT+CFUN=4** command or W_DISABLE# pin can set the module to airplane mode. In this case, the RF function will be invalid.	
Sleep Mode	In this mode, the current consumption of the module will be reduced to a minimal	

	level. In this mode, the module can still receive paging message, SMS, voice call and TCP/UDP data from the network normally.
Power Down Mode	In this mode, the power management unit (PMU) shuts down the power supply, software goes inactive and the serial interfaces are not accessible. However, the VBAT pins are still powered.

3.5. Power Supply

3.5.1. Power Supply Pins

UG89 provides two VBAT pins for connection with the external power supply.

The following table shows the details of power supply and GND pins.

Table 7: VBAT and GND Pins

Pin Name	Pin No.	Description	Min.	Typ.	Max.	Unit
VBAT	4, 57	Power supply for module	3.3	3.8	4.5	V
GND	3, 5, 8,37, 39, 41, 52, 58~62, 64~67, 73, 82~84, 89~97, 106 110~120	Ground	-	-	-	-

3.5.2. Decrease Voltage Drop

The power supply range of the module is 3.3V~4.5V. Please make sure that the input voltage will never drop below 3.3V. If the voltage drops to below 3.3V, the module will be turned off automatically. The following figure shows the voltage drop during burst transmission in 2G network. The voltage drop will be less in 3G networks.

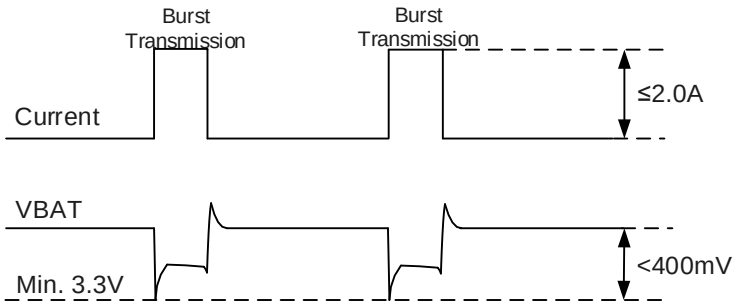

Figure 3: Voltage Drop during Burst Transmission

To decrease voltage drop, a bypass capacitor of about 100μF with low ESR (ESR≤0.7Ω) should be used, and a multi-layer ceramic chip (MLCC) capacitor array should also be reserved due to its ultra-low ESR. It is recommended to use three ceramic capacitors (100nF, 33pF, 10pF) for composing the MLCC array, and place these capacitors close to the VBAT_BB and VBAT_RF pins. The main power supply from an external application has to be a single voltage source and can be expanded to two sub paths with a star structure. The width of VBAT_BB trace should be no less than 1mm, and the width of VBAT_RF trace should be no less than 2mm. In principle, the longer the VBAT trace is, the wider it will be.

In addition, in order to ensure the stability of power source, it is suggested that a TVS diode WS4.5D3HV of which reverse stand-off voltage is 4.7V and peak pulse power is up to 2550W should be used. The following figure shows the star structure of the power supply.

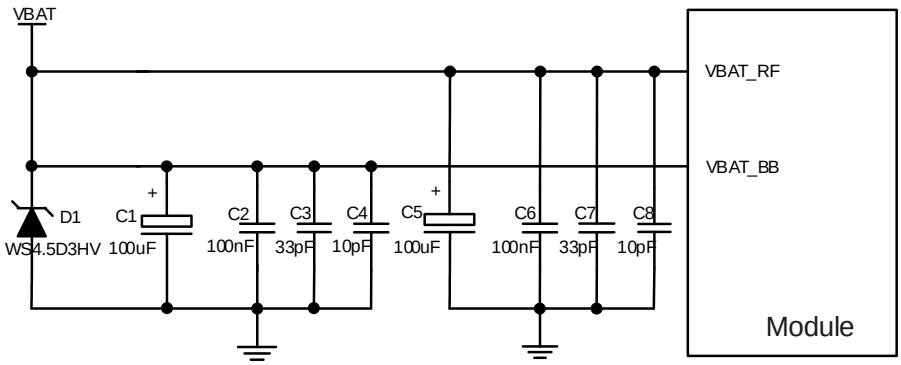

Figure 4: Star Structure of the Power Supply

3.5.3. Reference Design for Power Supply

Power design for the module is very important, as the performance of the module largely depends on the power source. The power supply should be able to provide sufficient current up to 2.0A at least to the module. If the voltage drop between the input and output is not too high, it is suggested that an LDO should be used to supply power for the module. If there is a big voltage difference between the input source and the desired output (VBAT), a buck converter is preferred to be used as the power supply.

The following figure shows a reference design for a +5V input power source. The typical output of the power supply is about 3.8V and the maximum load current is 3.0A.

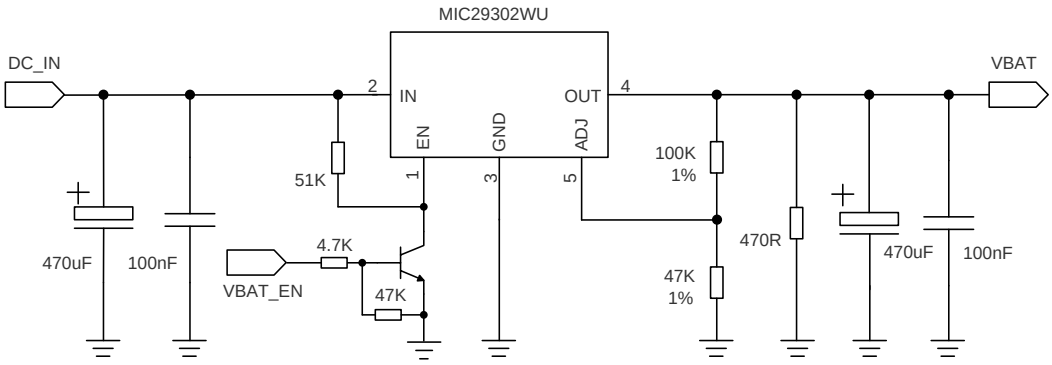

Figure 5: Reference Circuit of Power Supply

3.6. Power-on/off/Reset Scenarios

3.6.1. Turn on the Module Using the PWRKEY

The following table shows the pin definition of PWRKEY.

Table 8: Pin Description of PWRKEY

Pin Name	Pin No.	I/O	Description	Comment
PWRKEY	79	DI	Turn on/off the module	VBAT power domain

When UG89 is in power-down mode, it can be turned on to normal mode by driving the PWRKEY pin to a low level for at least 500ms. It is recommended to use an open drain/collector driver to control the PWRKEY. A simple reference circuit is illustrated in the following figure.

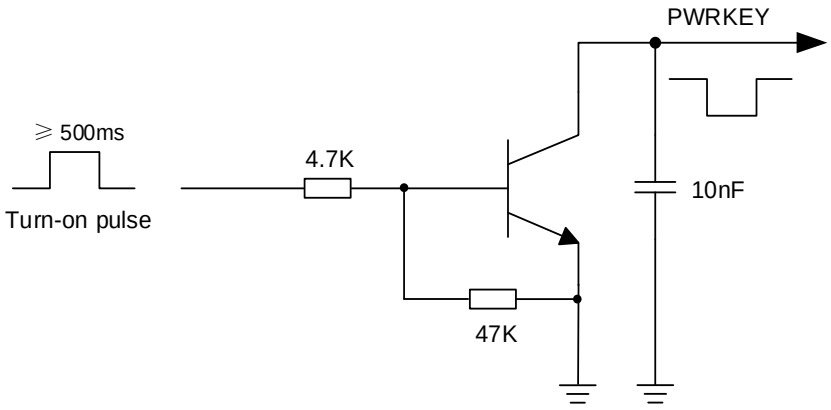

Figure 6: Reference Circuit of Turing on the Module Using Driving Circuit

The other way to control the PWRKEY is using a button directly. When pressing the key, an electrostatic strike may generate from the finger. Therefore, a TVS component is indispensable to be placed nearby the button for ESD protection. A reference circuit is shown in the following figure.

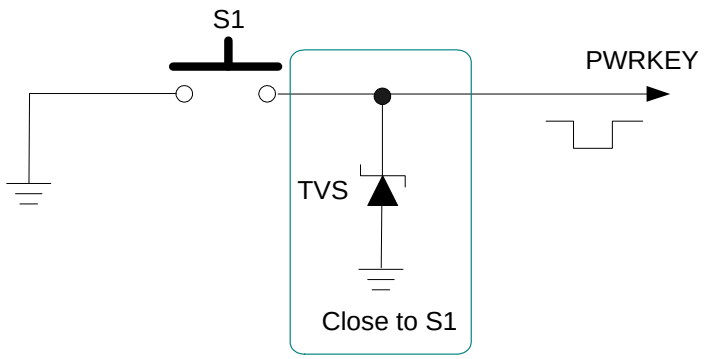

Figure 7: Reference Circuit of Turing on the Module Using Keystroke

The timing of turning on the module is illustrated in the following figure.

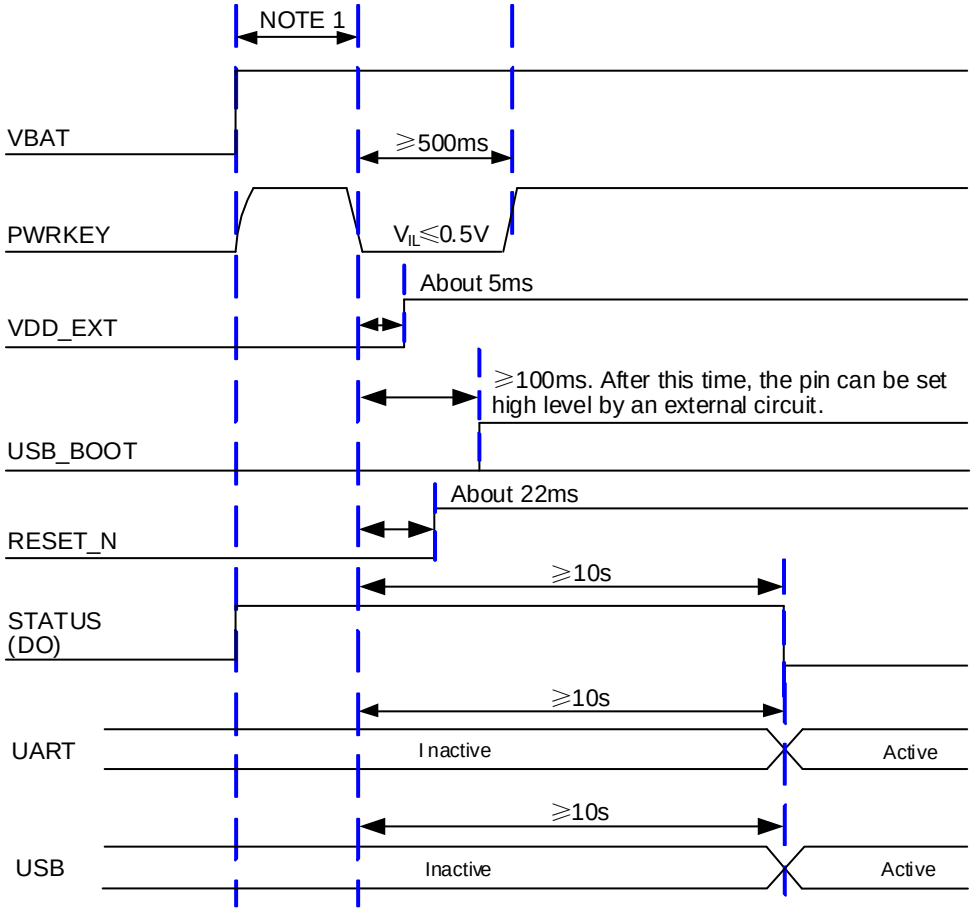

Figure 8: Timing of Turning on the Module

NOTES

1. Please make sure that VBAT is stable before pulling down PWRKEY pin. The time between them is no less than 30ms.
2. PWRKEY can be pulled down directly to GND with a recommended 4.7kΩ resistor if the module needs to be powered on automatically and shutdown is not needed.

3.6.2. Turn off the Module

The following procedures can be used to turn off the module:

- Using the PWRKEY pin.
- Using **AT+QPOWD** command.

3.6.2.1. Turn off the Module Using the PWRKEY Pin

Driving the PWRKEY pin to a low-level voltage for at least 650ms, the module will execute power-down procedure after the PWRKEY is released. The timing of turning off the module is illustrated in the following figure.

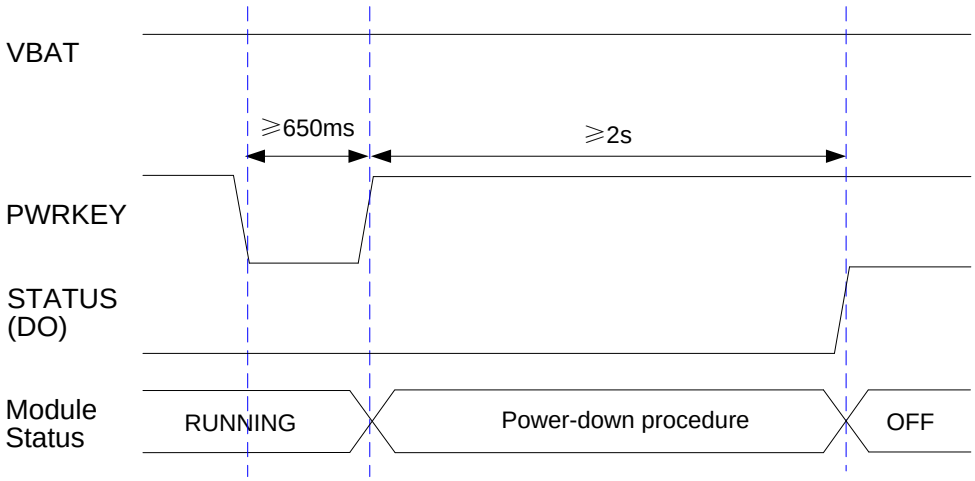

Figure 9: Timing of Turning off the Module

3.6.2.2. Turn off Module Using AT Command

It is also a safe way to use **AT+QPOWD** command to turn off the module, which is similar to the procedure of turning off the module via PWRKEY pin.

Please refer to ***document [2]*** for details about **AT+QPOWD** command.

NOTES

1. In order to avoid damaging internal flash, please do not switch off the power supply when the module works normally. Only after the module is shut down by PWRKEY or AT command, the power supply can be cut off.
2. When turning off the module with the AT command, please keep PWRKEY at a high level after the execution of the command. Otherwise, the module will turn itself back on after being shut down.

3.6.3. Reset the Module

The RESET_N pin can be used to reset the module. The module can be reset by pulling the RESET_N pin low for at least 300ms and then releasing it. The RESET_N signal is sensitive to interference, so it is recommended that the traces between the RESET_N pin and customers' device should be as short as

possible and must be encircled by ground traces.

Table 9: Pin Description of RESET_N

Pin Name	Pin No.	I/O	Description	Comment
RESET_N	34	DI	Reset the module. Active low.	1.8V power domain. If unused, keep it open.

The recommended circuit is similar to the PWRKEY control circuit. An open-drain/collector driver or button can be used to control the RESET_N.

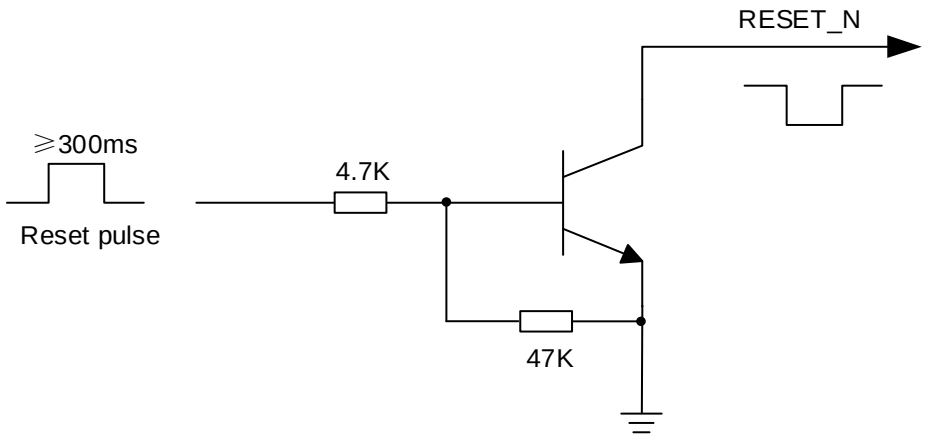

Figure 10: Reference Circuit of Resetting the Module by Using Driving Circuit

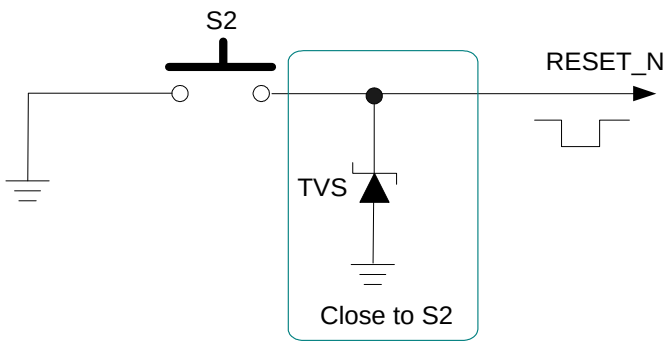

Figure 11: Reference Circuit of Resetting the Module by Using Button

The timing of resetting module is illustrated in the following figure.

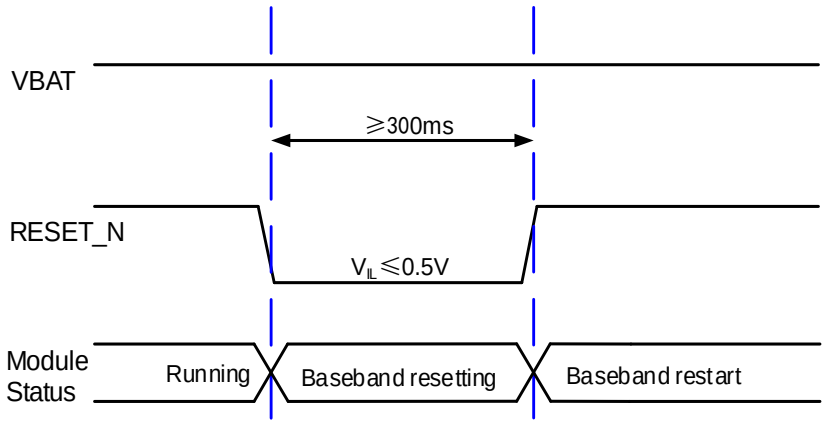

Figure 12: Timing of Resetting Module

NOTES

1. Please make sure that there is no large capacitance with the max value exceeding 10nF on PWRKEY and RESET_N pins.
2. RESET_N only resets the internal baseband chip of the module and does not reset the power management chip.
3. It is recommended to use RESET_N only when fail to turn off the module by **AT+QPOWD** command or PWRKEY pin.

3.6.4. Automatic Shutdown*

UG89 board is exceeding the critical limits of overtemperature or undertemperature,and undervoltage or overvoltage is detected than The UG89 will automatic shutdown.

3.6.4.1. Thermal Shutdown*

The board temperature is constantly monitored by an internal NTC resistor located on the PCB.The values detected by the NTC resistor are measured directly on the board and therefore, are not fully identical with the ambient temperature.

Each time the board temperature goes out of range or back to normal, UG89 instantly displays an alert (if enabled).

URCs indicating the level "1" or "-1" allow the user to take appropriate precautions, such as protecting the module from exposure to extreme conditions. The presentation of the URCs depends on the settings selected with the **AT+SCTM*** write command: **AT+SCTM=1***: Presentation of URCs is always enabled. **AT+SCTM=0*** (default): Presentation of URCs is enabled during the 2 minute guard period after start-up

of UG89. After expiry of the 2 minute guard period, the presentation of URCs will be disabled, i.e. no URCs with alert levels "1" or "-1" will be generated.

URCs indicating the level "2" or "-2" are instantly followed by an orderly shutdown. The presentation of these URCs is always enabled, i.e. they will be output even though the factory setting **AT+SCTM=0*** was never changed.

Please refer to ***document [2]*** for details about **AT+SCTM*** command.

The maximum temperature ratings are stated in Section 5.3. Refer to Table 12 for the associated URCs.

Table 10: Temperature dependent behavior

Sending temperature alert (2min after UG89 start-up, otherwise only if URC presentation enabled)	
^SCTM_B: 1	Board close to overtemperature limit.
^SCTM_B: -1	Board close to undertemperature limit.
^SCTM_B: 0	Board back to non-critical temperature range.
Automatic shutdown (URC appears no matter whether or not presentation was enabled)	
^SCTM_B: 2	Alert: Board equal or beyond overtemperature limit. UG89 switches off.
^SCTM_B: -2	Alert: Board equal or below undertemperature limit. UG89 switches off.

3.6.4.2. Undervoltage Shutdown*

The undervoltage shutdown threshold is the specified minimum supply voltage VBAT given in Table 23. When the average supply voltage measured by UG89 approaches the undervoltage shutdown threshold (i.e., 0.05V offset) the module will send the following URC:

^SBC: Undervoltage Warning

The undervoltage warning is sent only once until the next time the module is close to the undervoltage shutdown threshold.
If the voltage continues to drop below the specified undervoltage shutdown threshold, the module will send the following URC:

^SBC: Undervoltage Shutdown

This alert is sent only once before the module shuts down cleanly without sending any further messages. This type of URC does not need to be activated by the user. It will be output automatically when fault conditions occur.

3.6.4.3. Overvoltage Shutdown*

The overvoltage shutdown threshold is the specified maximum supply voltage VBAT given in Table 23. When the average supply voltage measured by UG89 approaches the overvoltage shutdown threshold (i.e., 0.05V offset) the module will send the following URC:

^SBC: Overvoltage Warning

The overvoltage warning is sent only once until the next time the module is close to the overvoltage shutdown threshold.
If the voltage continues to rise above the specified overvoltage shutdown threshold, the module will send the following URC:

^SBC: Overvoltage Shutdown

This alert is sent only once before the module shuts down cleanly without sending any further messages. This type of URC does not need to be activated by the user. It will be output automatically when fault conditions occur.

NOTE

"*" means under development.

3.7. UART Interfaces

The module provides two UART interfaces: the UART1 interface and the debug UART interface. The features of these interfaces are shown below.

- The UART1 interface supports 4800bps, 9600bps, 19200bps, 38400bps, 57600bps, 115200bps, 230400bps, 460800bps, 921600bps and 1Mbps baud rates, and the default is 115200bps. This interface is used for data transmission and AT command communication.
- The debug UART interface supports 115200bps baud rate. It is used for outputting partial logs.

The following tables show the pin definition of UART1 interface.

Table 11: Pin Definition of the UART1 Interface

Pin Name	Pin No.	I/O	Description	Comment
UART1_RI	13	DO	Ring indication	1.8V power domain. If unused, keep open.
UART1_DCD	45	DO	Data carrier detection	

UART1_CTS	11	DO	DTE clear to send
UART1_RTS	14	DI	DTE request to send
UART1_DTR	46	DI	Data terminal ready
UART1_TXD	10	DO	Transmit data
UART1_RXD	12	DI	Receive data
UART1_DSR	44	DO	Data set ready

Table 12: Pin Definition of the Debug UART Interface

Pin Name	Pin No.	I/O	Description	Comment
DBG_RXD	30	DI	Debug receive data	1.8V power domain.
DBG_TXD	31	DO	Debug transmit data	
DBG_RTS	32	DI	Debug request to send	
DBG_CTS	33	DO	Debug clear to send	

The logic levels are described in the following table.

Table 13: Logic Levels of Digital I/O

Parameter	Min.	Max.	Unit
V_{IL}	-0.3	0.6	V
V_{IH}	1.2	2.0	V
V_{OL}	0	0.45	V
V_{OH}	1.35	1.8	V

The module provides a 1.8V UART interface. A level translator should be used if the application is equipped with a 3.3V UART interface. A level translator TXS0108EPWR provided by *Texas Instruments* is recommended. The following figure shows a reference design.

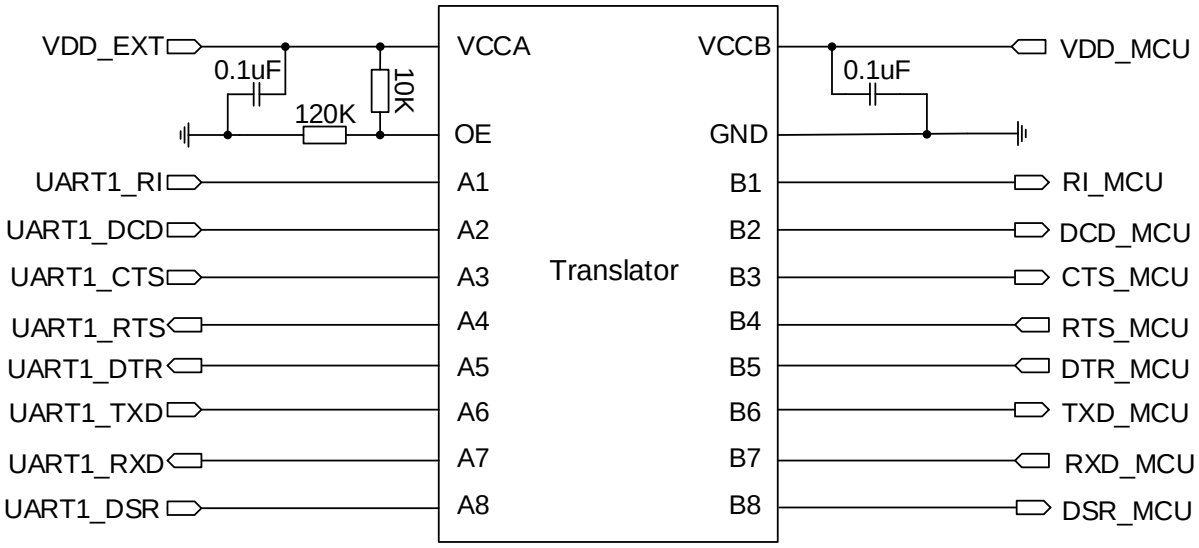

Figure 13: Reference Circuit with a Level Translator Chip

Please visit http://www.ti.com for more information.

Another example with transistor translation circuit is shown below. For the design of circuits in dotted lines, please refer to that of the circuits in solid lines, but please pay attention to the direction of connection.

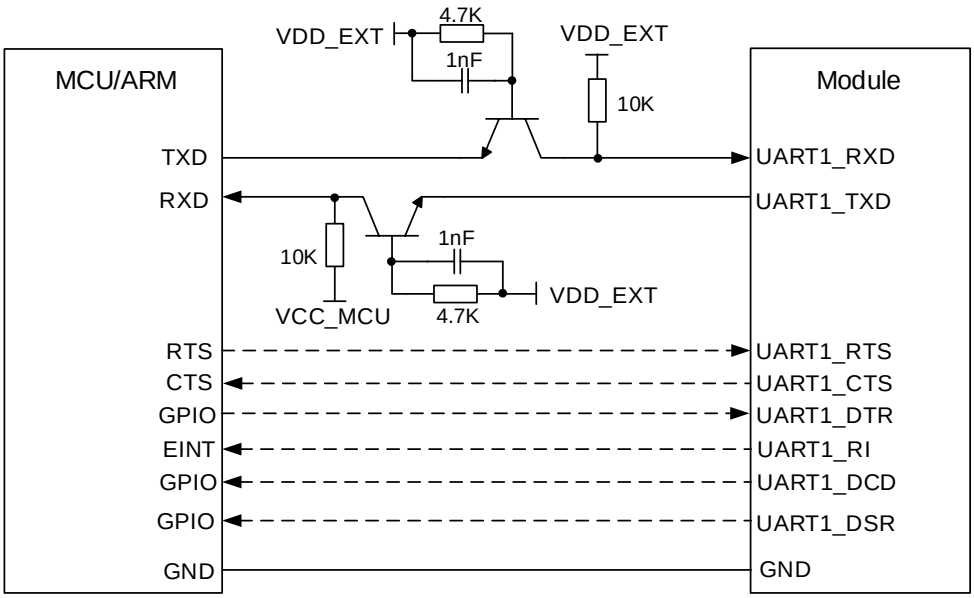

Figure 14: Reference Circuit with a Transistor Circuit

NOTE

The transistor circuit solution is not suitable for applications with baud rates exceeding 460Kbps.

3.8. (U)SIM Interface

The (U)SIM interface circuitry meets ETSI and IMT-2000 SIM interface requirements. Both 1.8V and 3.0V (U)SIM cards are supported.

Table 14: Pin Definition of the (U)SIM Card Interface

Pin Name	Pin No.	I/O	Description	Comment
USIM_DET	17	DI	(U)SIM card hot-plug detect	1.8V power domain. If unused, keep it open.
USIM_VDD	21	PO	Power supply for (U)SIM card	Either 1.8V or 3.0V (U)SIM card is supported and can be identified automatically by the module.
USIM_DATA	18	IO	(U)SIM card data	
USIM_CLK	22	DO	(U)SIM card clock	
USIM_RST	16	DO	(U)SIM card reset	

UG89 supports (U)SIM card hot-plug via the USIM_DET pin. The function supports low-level and high-level detections. By default, it is disabled and can be configured via **AT+QSIMDET**. Please refer to ***document [2]*** for details about the command.

The following figure shows a reference design for (U)SIM interface with an 8-pin (U)SIM card connector.

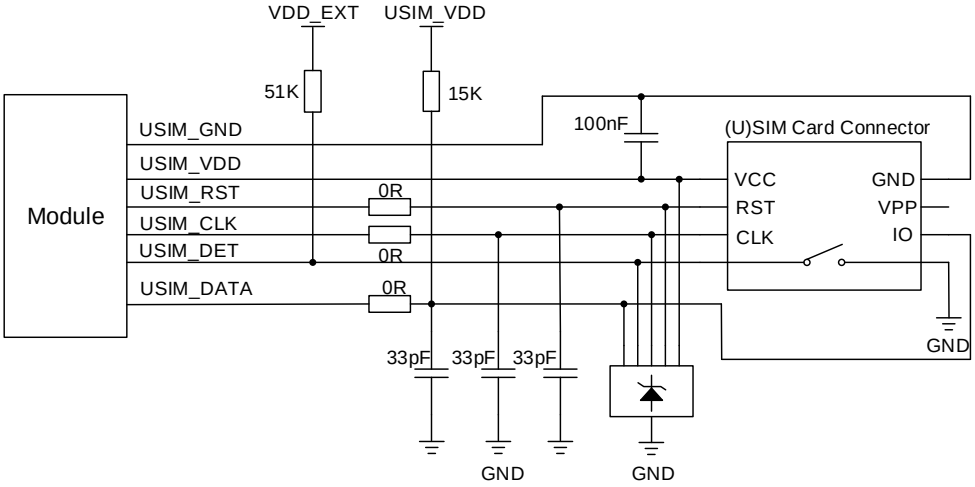

Figure 15: Reference Circuit of (U)SIM Interface with an 8-pin (U)SIM Card Connector

If (U)SIM card detection function is not needed, please keep USIM_DET unconnected. A reference circuit for (U)SIM interface with a 6-pin (U)SIM card connector is illustrated in the following figure.

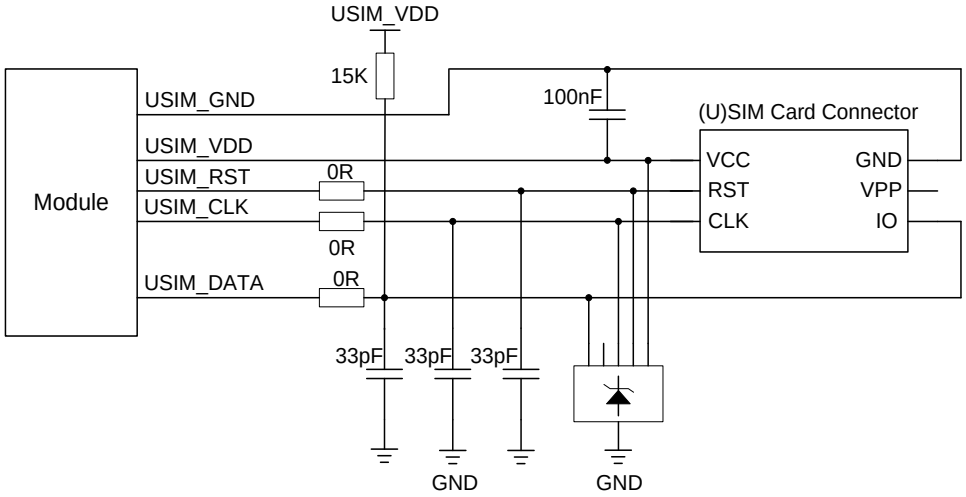

Figure 16: Reference Circuit of (U)SIM Interface with a 6-pin (U)SIM Card Connector

In order to enhance the reliability and availability of the (U)SIM card in customers' applications, please follow the criteria below in (U)SIM circuit design:

- Keep placement of (U)SIM card connector as close to the module as possible. Keep the trace length less than 200mm as far as possible.
- Keep (U)SIM card signals away from RF and VBAT traces.
- Assure the ground between the module and the (U)SIM card connector short and wide. Keep the trace width of ground and USIM_VDD no less than 0.5mm to maintain the same electric potential. If the ground is complete on customers' PCB, USIM_GND can be connected to PCB ground directly.
- To avoid cross-talk between USIM_DATA and USIM_CLK, keep them away from each other and shield them with the surrounded ground.

- In order to offer good ESD protection, it is recommended to add a TVS diode array whose parasitic capacitance should not be more than 15pF. The 0Ω resistors should be added in series between the module and the (U)SIM card to facilitate debugging. The 33pF capacitors are used for filtering interference of GSM900MHz. Please note that the (U)SIM peripheral circuit should be close to the (U)SIM card connector.
- The pull-up resistor on USIM_DATA can improve anti-jamming capability of the (U)SIM card. If the (U)SIM card traces are too long, or the interference source is relatively close, it is recommended to add a pull-up resistor near the (U)SIM card connector.

3.9. USB Interface

UG89 provides one integrated Universal Serial Bus (USB) interface which complies with the USB 2.0 specification and supports full-speed (12Mbps) and high-speed (480Mbps) modes. The USB interface can only serve as a slave device and is used for AT command communication, data transmission, software debugging and firmware upgrade. The following table shows the pin definition of USB interface.

Table 15: Pin Description of USB Interface

Pin Name	Pin No.	I/O	Description	Comment
USB_DP	48	IO	USB differential data (+)	90Ω differential impedance
USB_DM	49	IO	USB differential data (-)	90Ω differential impedance
USB_VBUS	47	AI	USB connection detection	Typical 5.0V

For more details about the USB 2.0 specifications, please visit http://www.usb.org/home.

It is recommended to reserve the USB interface for firmware upgrade on customers' designs. The following figure shows a reference circuit of the USB interface.

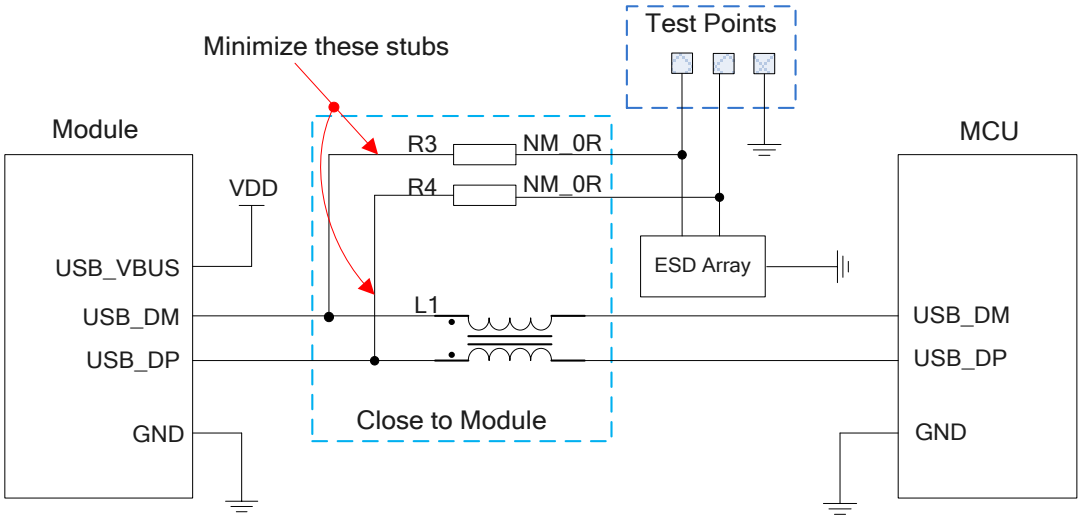

Figure 17: Reference Circuit of USB Application

A common mode choke L1 is recommended to be added in series between the module and customer's MCU in order to suppress EMI spurious transmission. Meanwhile, the 0Ω resistors (R3 and R4) should be added in series between the module and the test points so as to facilitate debugging, and the resistors are not mounted by default. In order to ensure the integrity of the USB data line signal, L1, R3 and R4 components must be placed close to the module, and also resistors R3 and R4 should be placed close to each other. The extra stubs of trace must be as short as possible.

The following principles should be followed when designing the USB interface, so as to meet USB 2.0 specification.

- It is important to route the USB signal traces as differential pairs with total grounding. The impedance of USB differential trace is 90Ω.
- Do not route signal traces under crystals, oscillators, magnetic devices and RF signal traces. It is important to route the USB differential traces in inner-layer of the PCB, and surround the traces with ground on that layer and ground planes above and below.
- Please pay attention to the selection of the ESD component on the USB data line. Its parasitic capacitance should not exceed 2pF and should be placed as close as possible to the USB interface.

3.10. ADC Interfaces

The module provides two analog-to-digital converter (ADC) interfaces. **AT+QADC=0** can be used to read the voltage value on ADC pin. For more details about these AT commands, please refer to the ***document [2]***.

In order to improve the accuracy of ADC, the traces of ADC interfaces should be encircled by ground traces.

Table 16: Pin Definition of the ADC Interfaces

Pin Name	Pin No.	Description
ADC	6	General-purpose analog to digital converter

The following table describes the characteristic of the ADC function.

Table 17: Characteristic of the ADC

Parameter	Min.	Typ.	Max.	Unit
ADC Voltage Range	0		1.2	V
ADC Resolution		12		bits

NOTE

It is recommended to use a resistor divider circuit for ADC application.

3.11. PCM and I2C Interfaces

UG89 provides one Pulse Code Modulation (PCM) digital interface for audio design, which supports the primary mode (short frame synchronization) and UG89 works as both master and slave.

UG89 works as a master device pertaining to I2C interface.

In primary mode, the data is sampled on the falling edge of the PCM_CLK and transmitted on the rising edge. The PCM_SYNC falling edge represents the MSB. In this mode, the PCM interface supports 256kHz, 512kHz, 1024kHz or 2048kHz PCM_CLK at 8kHz PCM_SYNC, and also supports 4096kHz PCM_CLK at 16kHz PCM_SYNC.

UG89 supports 16-bit linear data format. The following figure shows the primary mode's timing relationship with 8kHz PCM_SYNC and 2048kHz PCM_CLK.

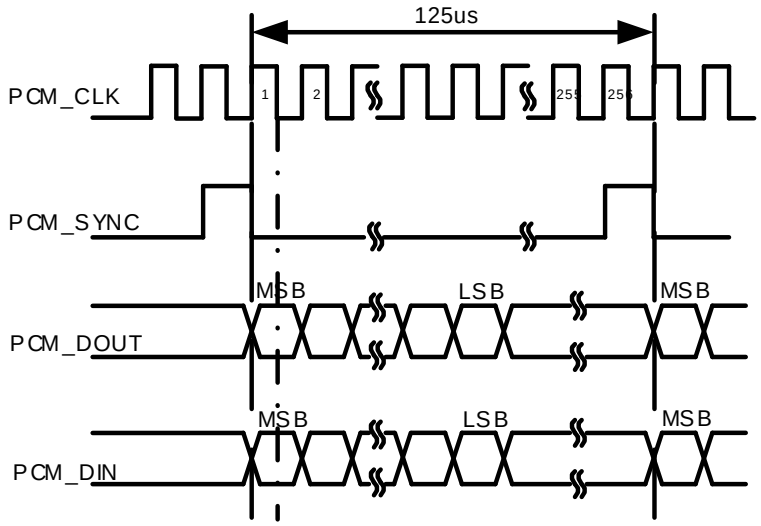

Figure 18: Primary Mode Timing

The following table shows the pin definition of PCM and I2C interfaces which can be applied on audio codec design.

Table 18: Pin Definition of PCM and I2C Interfaces

Pin Name	Pin No.	I/O	Description	Comment
PCM_DIN	26	DI	PCM data input	1.8V power domain If unused, keep it open
PCM_DOUT	24	DO	PCM data output	1.8V power domain If unused, keep it open
PCM_SYNC	25	IO	PCM data frame synchronization	1.8V power domain . In master mode, it serves as an output signal. In slave mode, it is used as an input signal. If unused, keep it open.
PCM_CLK	27	IO	PCM clock	1.8V power domain In master mode, it serves as an output signal. In slave mode, it is used as an input signal. If unused, it is recommended to mount a 33pF capacitor close to the pin.
I2C_SCL	29	OD	I2C serial clock for an	An external 1.8V pull-up resistor

			external codec	is required. If unused, it is recommended to mount a 33pF capacitor close to the pin.
I2C_SDA	28	OD	I2C serial data for an external codec	An external 1.8V pull-up resistor is required. If unused, keep it open.

Clock and mode can be configured by AT command, and the default configuration is short frame synchronization format with 2048kHz PCM_CLK and 8kHz PCM_SYNC.

The following figure shows a reference design of a PCM interface with external codec IC.

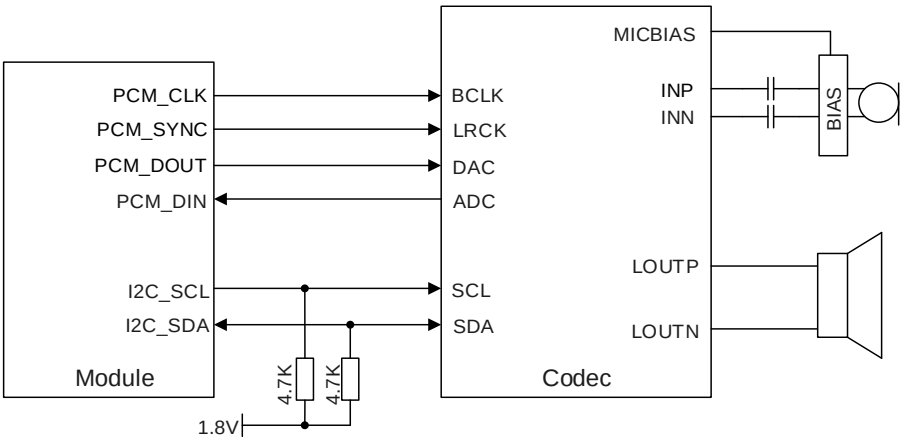

Figure 19: Reference Circuit of PCM Application with Audio Codec

NOTE

It is recommended to reserve an RC (R=22Ω, C=22pF) circuit on the PCM lines, especially for PCM_CLK.

3.12. STATUS

The STATUS pin is an open drain output for the module's operation status indication. It can be connected to a GPIO of DTE with a pulled-up resistor, or as an LED indication circuit as below. When the module is turned on normally, the STATUS will present the low state. Otherwise, the STATUS will present high-impedance state.

Table 19: Pin Definition of STATUS

Pin Name	Pin No.	I/O	Description	Comment
STATUS	53	DO	Indicate the module's operation status	

The following figure shows different circuit designs of STATUS, and customers can choose either one according to the application demands.

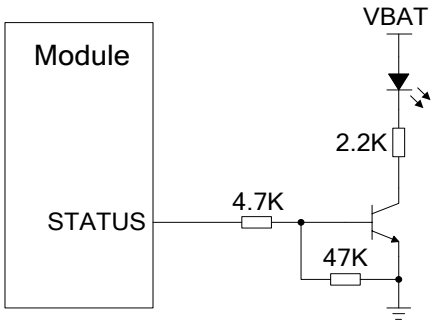

Figure 20: Reference Circuits of STATUS

NOTE

The status pin cannot be used as an indication of module shutdown status when VBAT is removed.

3.13. Behaviors of the UART1_RI

AT+QCFG="risignaltype","physical" command can be used to configure UART1_RI behaviors.

No matter on which port a URC is presented, the URC will trigger behaviors of the UART1_RI pin.

NOTE

The URC can be outputted from the UART port, USB AT port and USB modem port, which can be set by **AT+QURCCFG**. The default port is USB AT port.

In addition, the UART1_RI behavior can be configured flexibly. The default behavior of the UART1_RI is shown below.

Table 20: Behaviors of the UART1_RI

State	Response
Idle	UART1_RI keeps at a high level
URC	UART1_RI outputs 120ms low pulse when a new URC is returned

The UART1_RI behavior can be changed via **AT+QCFG="urc/ri/ring"** *. Please refer to ***document [2]*** for details.

NOTE

"*" means under development.

4 Antenna Interface

UG89 includes a GSM/UMTS antenna interface. The RF interface has a 50Ω impedance.

4.1. GSM/UMTS Antenna Interface

4.1.1. Pin Definition

The pin definition of the RF antenna is shown below.

Table 21: Pin Definition of RF Antenna

Pin Name	Pin No.	I/O	Description	Comment
GND	61		Ground	
GND	62		Ground	
ANT_MAIN	63	IO	RF antenna pad	50Ω impedance
GND	64		Ground	
GND	65		Ground	

4.1.2. Operating Frequency

Table 22: Module Operating Frequencies

Band	Transmit	Receive	Unit
GSM850	824~849	869~894	MHz
EGSM900	880~915	925~960	MHz
DCS1800	1710~1785	1805~1880	MHz
PCS1900	1850~1910	1930~1990	MHz
WCDMA B1	1920~1980	2110~2170	MHz
WCDMA B2	1850~1910	1930~1990	MHz

WCDMA B5	824~849	869~894	MHz
WCDMA B6	830~840	875~885	MHz
WCDMA B8	880~915	925~960	MHz

4.1.3. Reference Design of RF Antenna Interface

A reference design of RF antenna interface is recommended as below. A π-type matching circuit should be reserved for better RF performance, and the π-type matching components (R1/C1/C2) should be placed as close to the antenna as possible. The capacitors are not mounted by default.

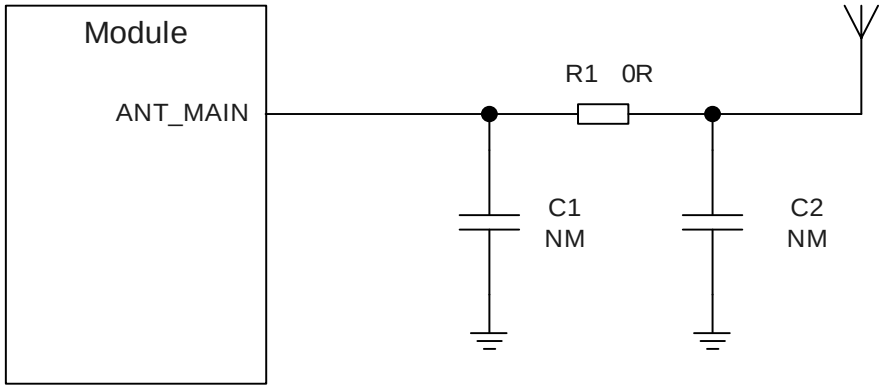

Figure 21: Reference Circuit of RF Antenna Interface

UG89 provides an RF antenna pad for customers' antenna connection. The RF trace in host PCB connected to the module's RF antenna pad should be micro-strip line or other types of RF traces, whose characteristic impendence should be close to 50Ω. UG89 comes with grounding pins which are next to the antenna pad in order to give a better grounding.

4.1.4. Reference Design of RF Layout

For user's PCB, the characteristic impedance of all RF traces should be controlled to 50Ω. The impedance of the RF traces is usually determined by the trace width (W), the materials' dielectric constant, height from the reference ground to the signal layer (H), and the clearance between RF traces and grounds (S). Microstrip or coplanar waveguide is typically used in RF layout to control characteristic impedance. The following are reference designs of microstrip or coplanar waveguide with different PCB structures

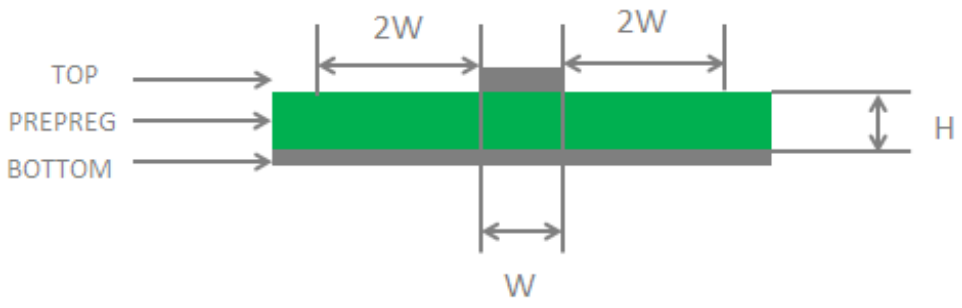

Figure 22: Microstrip Design on a 2-layer PCB

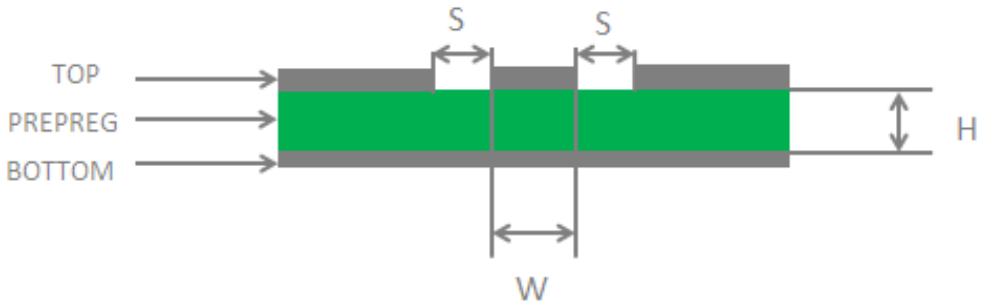

Figure 23: Coplanar Waveguide Design on a 2-layer PCB

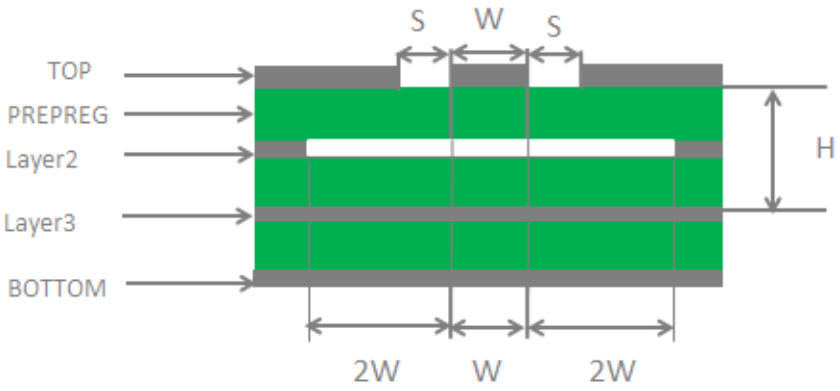

Figure 24: Coplanar Waveguide Design on a 4-layer PCB (Layer 3 as Reference Ground)

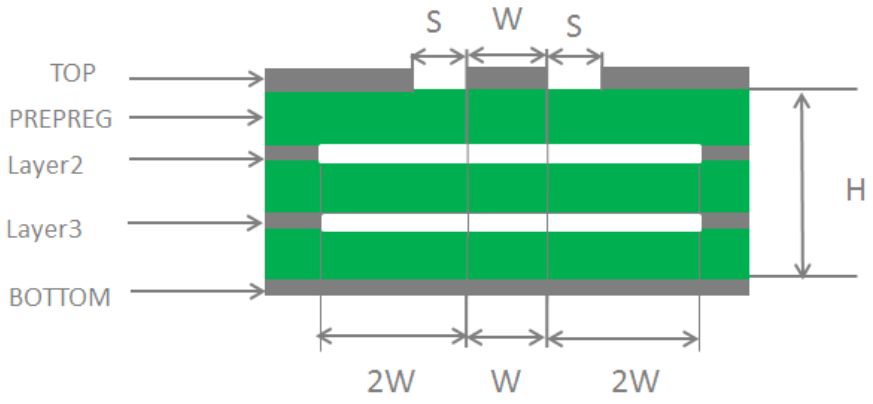

Figure 25: Coplanar Waveguide Design on a 4-layer PCB (Layer 4 as Reference Ground)

In order to ensure RF performance and reliability, the following principles should be complied with in RF layout design:

- Use an impedance simulation tool to accurately control the characteristic impedance of RF traces to 50Ω.
- The GND pins adjacent to RF pins should not be designed as thermal relief pins, and should be fully connected to ground.
- The distance between the RF pins and the RF connector should be as short as possible, and all the right angle traces should be changed to curved ones.
- There should be clearance under the signal pin of the antenna connector or solder joint.
- The reference ground of RF traces should be complete. Meanwhile, adding some ground vias around RF traces and the reference ground could help to improve RF performance. The distance between the ground vias and RF traces should be no less than two times as wide as RF signal traces (2*W).

For more details about RF layout, please refer to ***document [5]***.

4.2. Antenna Installation

4.2.1. Antenna Requirements

The following table shows the requirements on GSM/UMTS antenna.

Table 23: Antenna Requirements

Type	Requirements
GSM/UMTS	VSWR: ≤ 2 Efficiency: > 30% Max input power: 50W Input impedance: 50Ω Cable insertion loss: < 1dB Cable insertion loss: < 1.5dB (DCS1800/PCS1900，UMTS1900/2100)

4.2.2. Recommended RF Connector for Antenna Installation

If RF connector is used for antenna connection, it is recommended to use U.FL-R-SMT connector provided by HIROSE.

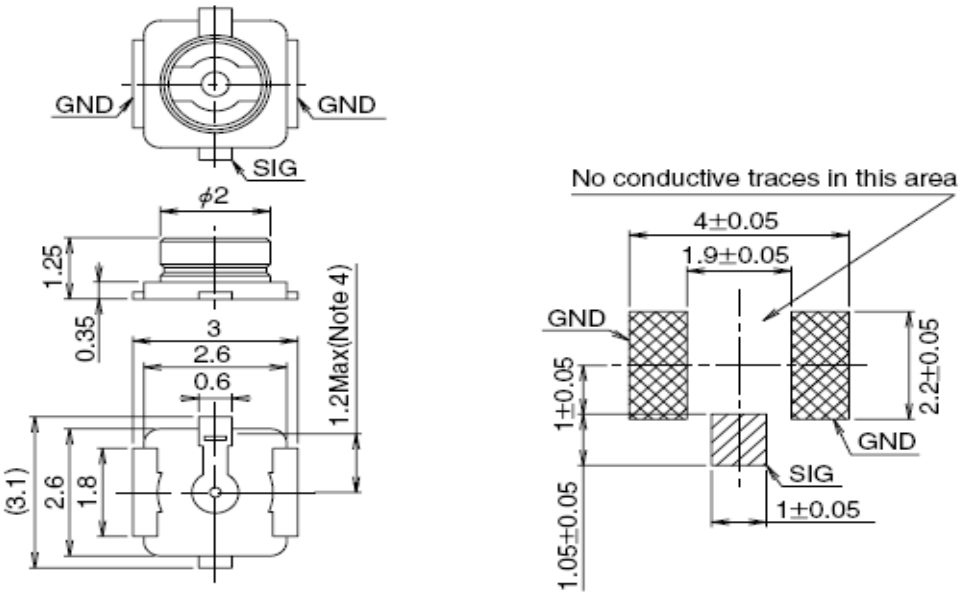

Figure 26: Dimensions of the U.FL-R-SMT Connector (Unit: mm)

U.FL-LP serial connectors listed in the following figure can be used to match the U.FL-R-SMT.

	U.FL-LP-040	U.FL-LP-066	U.FL-LP(V)-040	U.FL-LP-062	U.FL-LP-088
Part No.	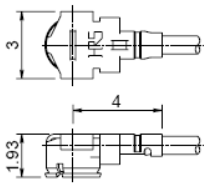	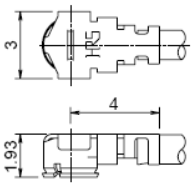	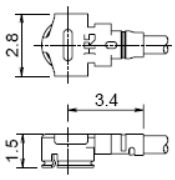	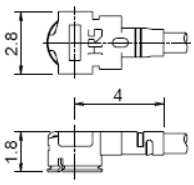	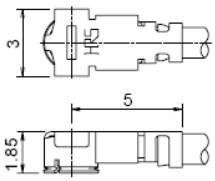
Mated Height	2.5mm Max. (2.4mm Nom.)	2.5mm Max. (2.4mm Nom.)	2.0mm Max. (1.9mm Nom.)	2.4mm Max. (2.3mm Nom.)	2.4mm Max. (2.3mm Nom.)
Applicable cable	Dia. 0.81mm Coaxial cable	Dia. 1.13mm and Dia. 1.32mm Coaxial cable	Dia. 0.81mm Coaxial cable	Dia. 1mm Coaxial cable	Dia. 1.37mm Coaxial cable
Weight (mg)	53.7	59.1	34.8	45.5	71.7
RoHS	YES				

Figure 27: Mechanicals of U.FL-LP Connectors

The following figure describes the space factor of mated connector

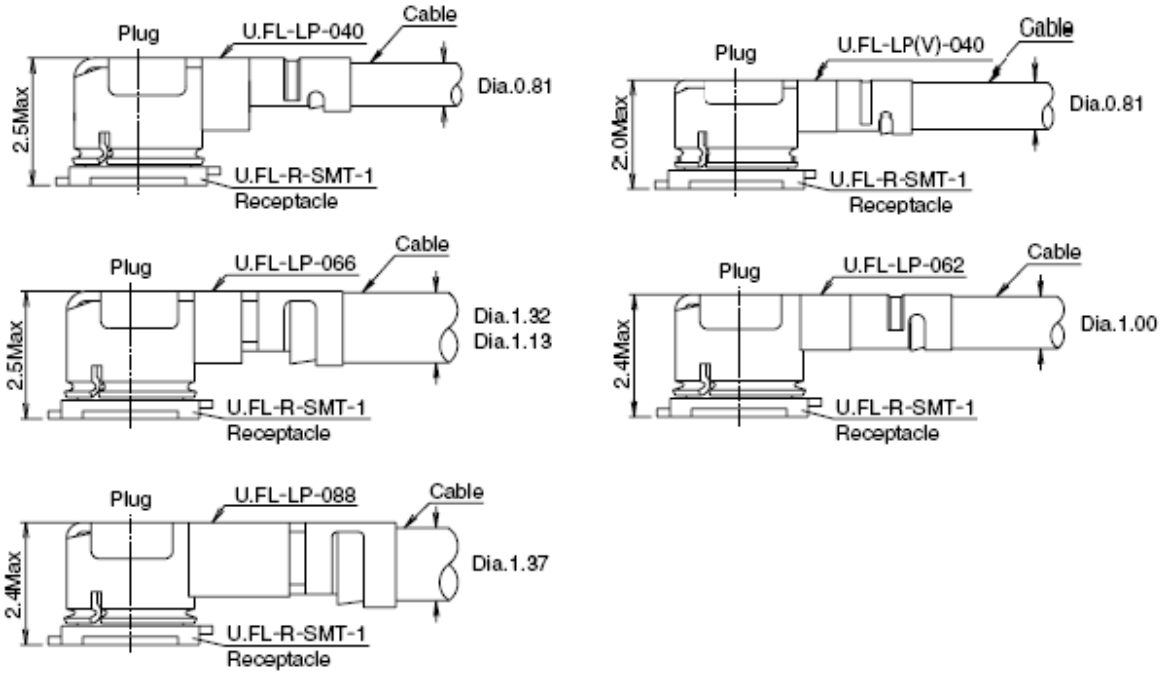

Figure 28: Space Factor of Mated Connector (Unit: mm)

For more details, please visit http://www.hirose.com.

5 Electrical, Reliability and Radio Characteristics

5.1. Absolute Maximum Ratings

Absolute maximum ratings for power supply and voltage on digital and analog pins of the module are listed in the following table.

Table 24: Absolute Maximum Ratings

Parameter	Min.	Max.	Unit
VBAT	-0.3	6.0	V
USB_VBUS	-0.3	5.5	V
Peak Current of VBAT	0	2	A
Voltage at Digital Pins	-0.3	2.3	V
Voltage at ADC	0	VBAT	V

5.2. Power Supply Ratings

Table 25: The Module Power Supply Ratings

Parameter	Description	Conditions	Min.	Typ.	Max.	Unit
VBAT	VBAT	The actual input voltages must be kept between the minimum and maximum values.	3.3	3.8	4.5	V
	Voltage drop during burst transmission	Maximum power control level on GSM850/EGSM900.			400	mV
I_{VBAT}	Peak supply current (during each transmission slot)	Maximum power control level on GSM850/EGSM900.		1.8	2.0	A
USB_VBUS	USB connection detection		3.0	5.0	5.25	V

5.3. Operation and Storage Temperatures

The operation and storage temperatures are listed in the following table.

Table 26: Operation and Storage Temperatures

Parameter	Min.	Typ.	Max.	Unit
Operation Temperature Range [1)]	-35	+25	+75	ºC
Extended Operation Range [2)]	-40		+85	ºC
Storage Temperature Range	-40		+90	ºC

NOTES

1. [1)] Within the operation temperature range, the module is 3GPP compliant.
2. [2)] Within the extended temperature range, the module remains the ability to establish and maintain a voice, SMS, data transmission, etc. There is no unrecoverable malfunction. There are also no

effects on radio spectrum and no harm to radio network. Only one or more parameters like P_{out} might reduce their value and exceed the specified tolerances. When the temperature returns to the normal operating temperature levels, the module will meet 3GPP specifications again.

5.4. Current Consumption

Table 27: UG89 Current Consumption

Parameter	Description	Condition	Typical	Unit
I_{VBAT}	Power off	Module power off	18	uA
	Sleep mode	**AT+CFUN=0** (USB disconnected)	TBD	mA
		EGSM @DRX=2 (USB disconnected)	TBD	mA
		EGSM @DRX=9 (USB disconnected)	TBD	mA
		WCDMA PF=64 (USB disconnected)	TBD	mA
		WCDMA PF=128	TBD	mA
	Idle mode	EGSM @DRX=5 (USB disconnected)	29.34	mA
		EGSM @DRX=5 (USB connected)	29.29	mA
		WCDMA PF=64 (USB disconnected)	31.66	mA
		WCDMA @DRX=64 (USB connected)	32.48	mA
	GPRS data transfer	EGSM900 4DL/1UL @33.34dBm	268.4	mA
		EGSM900 3DL/2UL @33.26dBm	437.3	mA
		EGSM900 2DL/3UL @31.59dBm	525.0	mA
		EGSM900 1DL/4UL @29.57dBm	580.8	mA
		DCS1800 4DL/1UL @30.59dBm	204.7	mA
		DCS1800 3DL/2UL @30.56dBm	325.2	mA

		DCS1800 2DL/3UL @28.77dBm	373.7	mA
		DCS1800 1DL/4UL @26.69dBm	393.5	mA
	EDGE data transfer	EGSM900 4DL/1UL @27.23dBm	171.3	mA
		EGSM900 3DL/2UL @27.10dBm	269.9	mA
		EGSM900 2DL/3UL @24.96dBm	316.9	mA
		EGSM900 1DL/4UL @23.15dBm	359.4	mA
		DCS1800 4DL/1UL @26.62dBm	160.3	mA
		DCS1800 3DL/2UL @26.46dBm	246.8	mA
		DCS1800 2DL/3UL @24.40dBm	301.4	mA
		DCS1800 1DL/4UL @22.11dBm	352.9	mA
	WCDMA data transfer	WCDMA B1 HSDPA @23.64dBm	598.3	mA
		WCDMA B1 HSUPA @23.58dBm	597.8	mA
		WCDMA B2 HSDPA @23.56dBm	649.0	mA
		WCDMA B2 HSUPA @23.34dBm	653.7	mA
		WCDMA B5 HSDPA @23.46dBm	626.8	mA
		WCDMA B5 HSUPA @23.35dBm	622.8	mA
		WCDMA B8 HSDPA @23.91dBm	626.5	mA
		WCDMA B8 HSUPA @23.95dBm	625.4	mA
	GSM voice call	EGSM900 PCL=5 @33.24dBm	260.9	mA
		EGSM900 PCL=12 @19.33dBm	123.4	mA
		EGSM900 PCL=19 @5.42dBm	95.0	mA
		DCS1800 PCL=0 @30.49dBm	193.6	mA
		DCS1800 PCL=7 @16.67dBm	109.4	mA
		DCS1800 PCL=15 @0.84dBm	91.7	mA
	WCDMA voice call	WCDMA B1 @23.97dBm	600.2	mA

	WCDMA B2 @23.78dBm	658.1	mA
	WCDMA B5 @ 23.68dBm	623.9	mA
	WCDMA B8 @ 23.96dBm	632.3	mA

5.5. RF Output Power

The following table shows the RF output power of UG89 module.

Table 28: RF Output Power

Frequency	Max.	Min.
GSM850/EGSM900	33dBm±2dB	5dBm±5dB
DCS1800/PCS1900	30dBm±2dB	0dBm±5dB
GSM850/EGSM900 (8-PSK)	27dBm±3dB	5dBm±5dB
DCS1800/PCS1900 (8-PSK)	26dBm±3dB	0dBm±5dB
WCDMA B1/B2/B5/B6/B8	24dBm+1/-3dB	<-49dBm

NOTE

In GPRS 4 slots TX mode, the maximum output power is reduced by 4.0dB. The design conforms to the GSM specification as described in ***Chapter 13.16*** of *3GPP TS 51.010-1*.

5.6. RF Receiving Sensitivity

The RF receiving sensitivity of UG89 is listed in the following tables.

Table 29：UG89 Conducted RF Receiving Sensitivity

Frequency	Receive sensitivity			
	Primary	Diversity	SIMO	3GPP（SIMO）

GSM850	-109.5dBm	NA	NA	-102.0dBm
EGSM900	-109.5dBm	NA	NA	-102.0dBm
DCS1800	-108.5dBm	NA	NA	-102.0dBm
PCS1900	-108dBm	NA	NA	-102.0dBm
WCDMA B1	-109.5dBm	NA	NA	-106.7dBm
WCDMA B2	-109.5dBm	NA	NA	-104.7dBm
WCDMA B5	-110dBm	NA	NA	-104.7dBm
WCDMA B6	-111dBm	NA	NA	-106.7dBm
WCDMA B8	-110dBm	NA	NA	-103.7dBm

5.7. Electrostatic Discharge

The module is not protected against electrostatics discharge (ESD) in general. Consequently, it is subject to ESD handling precautions that typically apply to ESD sensitive components. Proper ESD handling and packaging procedures must be applied throughout the processing, handling, and operation of any application that incorporates the module.

The following table shows the module electrostatics discharge characteristics.

Table 30: Electrostatics Discharge Characteristics (Temperature=25 ºC, Humidity=45%)

Tested Points	Contact Discharge	Air Discharge	Unit
VBAT, GND	±8	±12	kV
All Antenna Interfaces	±8	±12	kV
Other Interfaces	±0.5	±1	kV

6 Mechanical Dimensions

This chapter describes the mechanical dimensions of the module. All dimensions are measured in millimeter (mm). The tolerances for dimensions without tolerance values are ±0.05mm.

6.1. Mechanical Dimensions of the Module

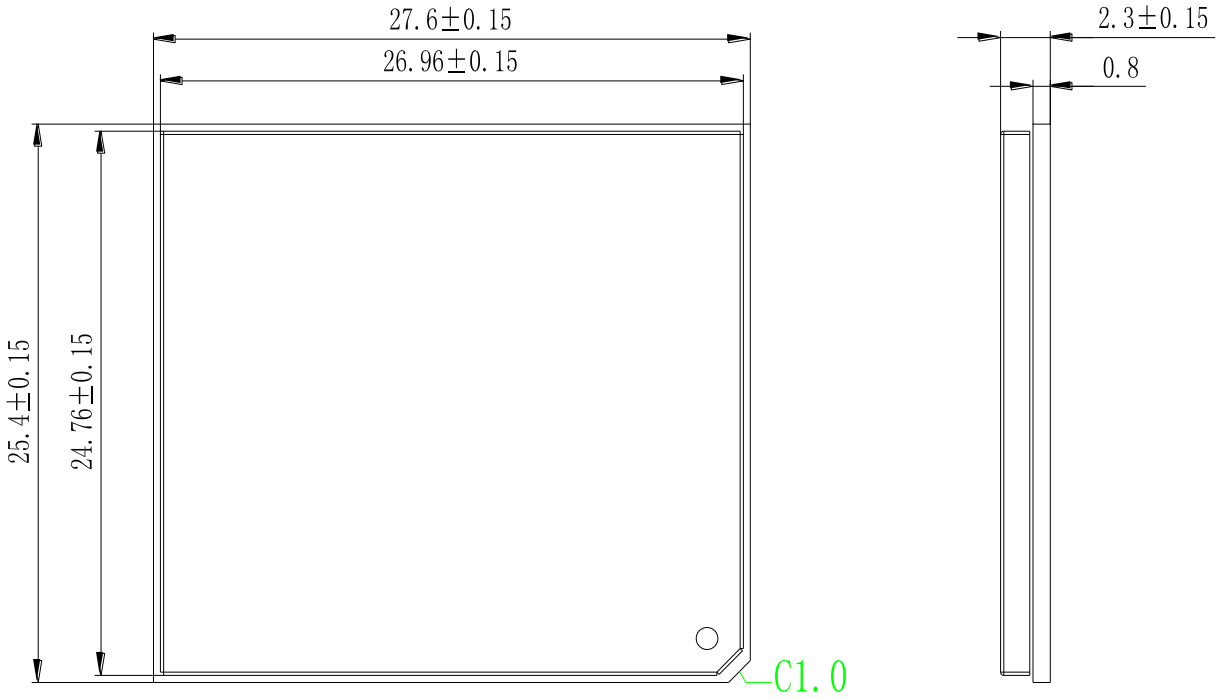

Figure 29: Module Top and Side Dimensions

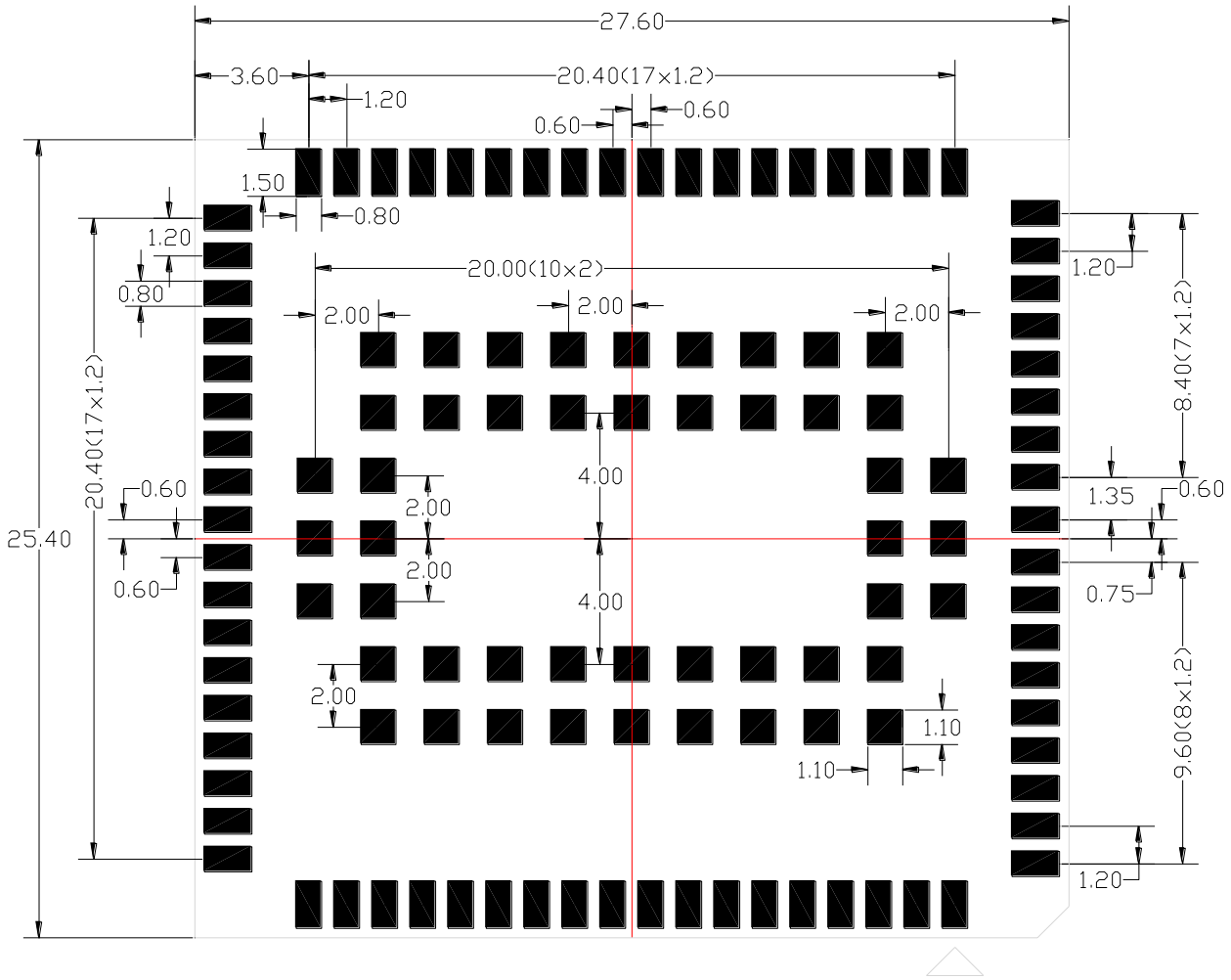

Figure 30: Module Bottom Dimensions (Top View)

6.2. Recommended Footprint Design

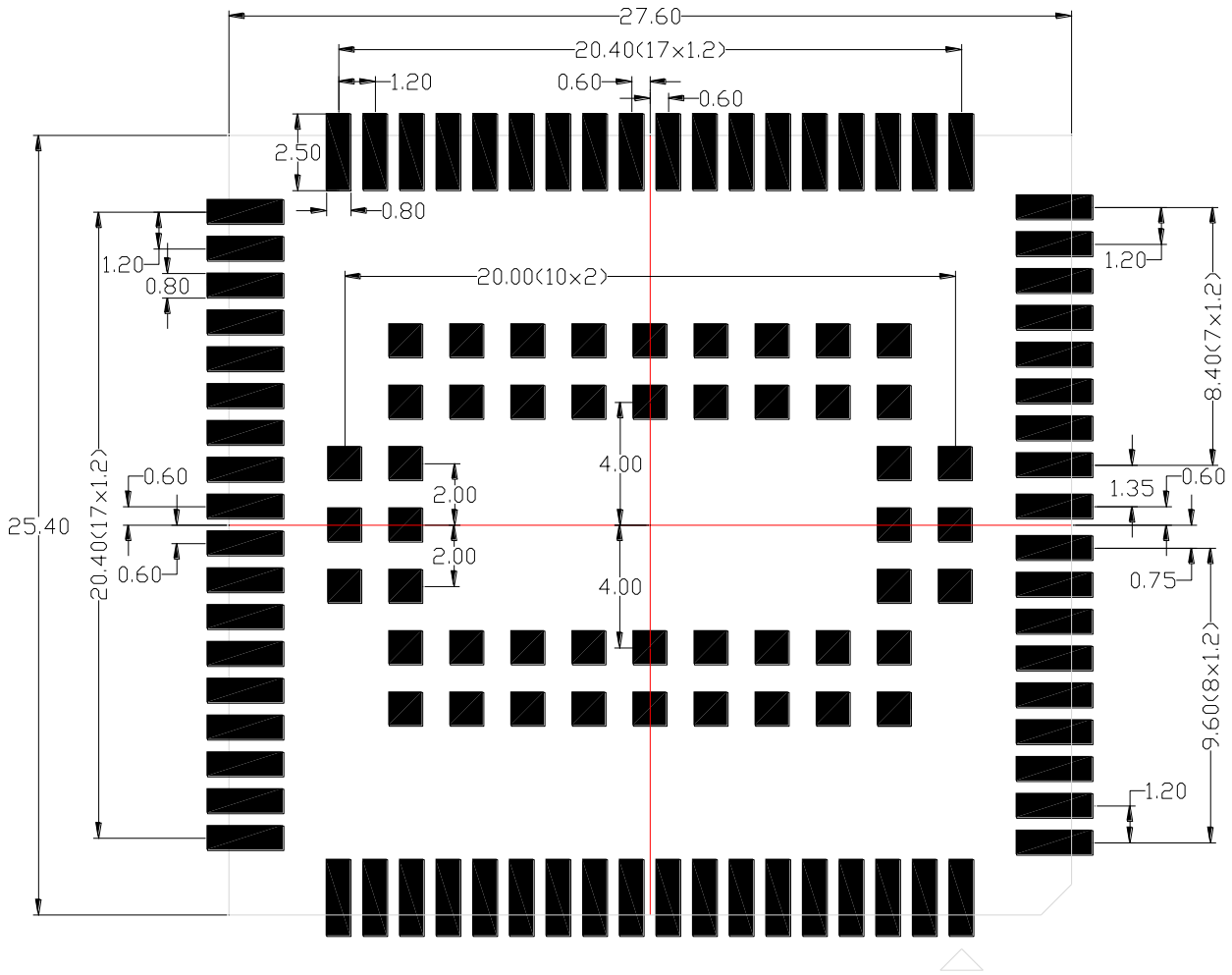

Figure 31: Recommended Footprint (Top View)

NOTES

1. For easy maintenance of the module, please keep about 3mm between the module and other components in the host PCB.
2. All RESERVED pins should be kept open and MUST NOT be connected to ground.

6.3. Top and Bottom Views of the Module

Figure 32: Top View of the Module

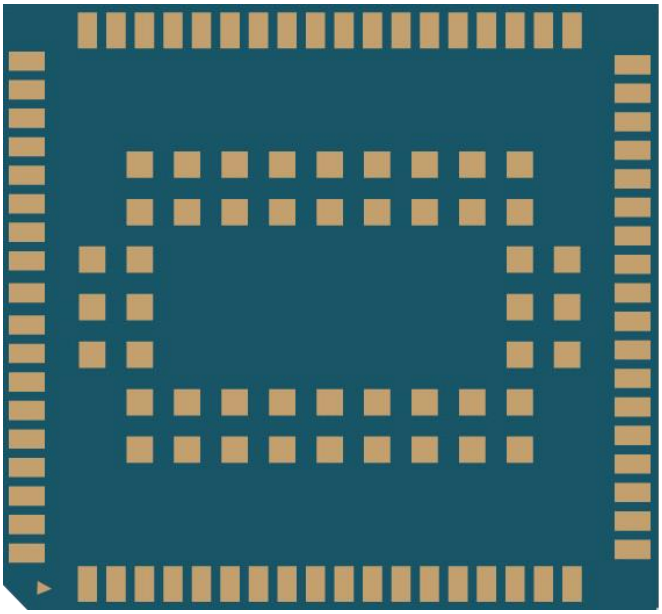

Figure 33: Bottom View of the Module

NOTE

These are renderings of UG89 module. For authentic dimension and appearance, please refer to the module that you receive from Quectel.

7 Storage, Manufacturing and Packaging

7.1. Storage

UG89 is stored in the vacuum-sealed bag. It is rated at MSL 3 and its storage restrictions are shown as below.

1. Shelf life in the vacuum-sealed bag: 12 months at <40ºC/<90%RH.

2. After the vacuum-sealed bag is opened, devices that will be subjected to reflow soldering or other high temperature processes must be:

   - Mounted within 168 hours at the factory conditions of ≤30ºC/<60%RH.
   - Stored at <10%RH.

3. Devices require baking before mounting, if any circumstance below occurs.

   - When the ambient temperature is 23ºC±5ºC and the humidity indication card shows the humidity is >10% before opening the vacuum-sealed bag.
   - Device mounting cannot be finished within 168 hours at factory conditions of ≤30ºC/60%RH.

4. If baking is required, devices may be baked for 8 hours at 120ºC±5ºC.

NOTE

As the plastic package cannot be subjected to high temperature, it should be removed from devices before high temperature (120ºC) baking. If shorter bake times are desired, please refer to *IPC/JEDECJ-STD-033* for bake procedure.

7.2. Manufacturing and Soldering

Push the squeegee to apply the solder paste on the surface of stencil, thus making the paste fill the stencil openings and then penetrate to the PCB. The force on the squeegee should be adjusted properly so as to produce a clean stencil surface on a single pass. To ensure the module soldering quality, the thickness of stencil for the module is recommended to be 0.13mm~0.15mm. For more details, please refer to ***document [4]***.

It is suggested that the peak reflow temperature is 238~245ºC, and the absolute maximum reflow temperature is 245ºC. To avoid damage to the module caused by repeated heating, it is strongly recommended that the module should be mounted after reflow soldering for the other side of PCB has been completed. The recommended reflow soldering thermal profile (lead-free reflow soldering) and related parameters are shown below.

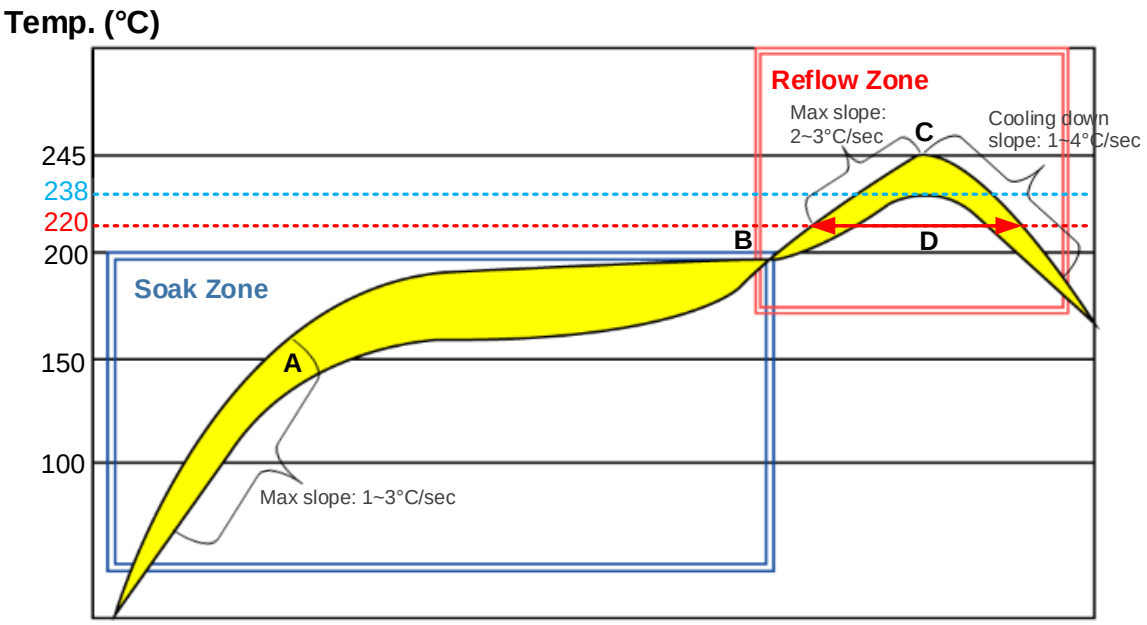

Figure 34: Reflow Soldering Thermal Profile

Table 31: Recommended Thermal Profile Parameters

Factor	Recommendation
Soak Zone	
Max slope	1 to 3°C/sec

Soak time (between A and B: 150°C and 200°C)	60 to 120 sec
Reflow Zone	
Max slope	2 to 3°C/sec
Reflow time (D: over 220°C)	40 to 60 sec
Max temperature	238°C ~ 245°C
Cooling down slope	1 to 4°C/sec
Reflow Cycle	
Max reflow cycle	1

NOTES

1. During manufacturing and soldering, or any other processes that may contact the module directly, NEVER wipe the module's shielding can with organic solvents, such as acetone, ethyl alcohol, isopropyl alcohol, trichloroethylene, etc. Otherwise, the shielding can may become rusted.
2. The shielding can for the module is made of Cupro-Nickel base material. It is tested that after 12 hours' Neutral Salt Spray test, the laser engraved label information on the shielding can is still clearly identifiable and the 2D barcode is still readable, although white rust may be found.

7.3. Packaging

UG89 is packaged in a vacuum-sealed bag which is ESD protected. The bag should not be opened until the devices are ready to be soldered onto the application.

8 Appendix A References

Table 32: Related Documents

SN	Document Name	Remark
[1]	Quectel_Module_Secondary_SMT_User_Guide	Module Secondary SMT User Guide
[2]	Quectel_UG89_AT_Commands_Manual	UG89 AT Commands Manual
[3]	Quectel_RF_Layout_Application_Note	RF Layout Application Note
[4]	Quectel_UMTS&LTE_EVB_User_Guide	UMTS&LTE EVB user guide for UMTS&LTE modules

Table 33: Terms and Abbreviations

Abbreviation	Description
ADC	Analog-to-Digital Converter
AMR	Adaptive Multi-rate
bps	Bits Per Second
CHAP	Challenge Handshake Authentication Protocol
CS	Coding Scheme
CTS	Clear To Send
DL	Downlink
DTE	Data Terminal Equipment
DTR	Data Terminal Ready
EFR	Enhanced Full Rate
EGSM	Enhanced GSM

ESD	Electrostatic Discharge
ESR	Equivalent Series Resistance
FDD	Frequency Division Duplex
FR	Full Rate
FTP	File Transfer Protocol
FTPS	FTP-over-SSL
GMSK	Gaussian Minimum Shift Keying
GSM	Global System for Mobile Communications
HR	Half Rate
HSPA	High Speed Packet Access
HSDPA	High Speed Downlink Packet Access
HSUPA	High Speed Uplink Packet Access
HTTP	Hypertext Transfer Protocol
LED	Light Emitting Diode
ME	Mobile Equipment
LTE	Long Term Evolution
MMS	Multimedia Messaging Service
MQTT	Message Queuing Telemetry Transport
MSL	Moisture Sensitivity Level
NITZ	Network Identity and Time Zone
NTP	Network Time Protocol
PAP	Password Authentication Protocol
PCB	Printed Circuit Board
PDU	Protocol Data Unit
PF	Paging Frame

PPP	Point-to-Point Protocol
PSK	Phase Shift Keying
QAM	Quadrature Amplitude Modulation
QPSK	Quadrature Phase Shift Keying
RF	Radio Frequency
SMS	Short Message Service
SMTP	Simple Mail Transfer Protocol
SSL	Secure Sockets Layer
TCP	Transmission Control Protocol
TDD	Time Division Duplexing
UART	Universal Asynchronous Receiver &Transmitter
UDP	User Datagram Protocol
UL	Uplink
UMTS	Universal Mobile Telecommunications System
URC	Unsolicited Result Code
(U)SIM	(Universal) Subscriber Identity Module
Vmax	Maximum Voltage Value
Vnorm	Normal Voltage Value
Vmin	Minimum Voltage Value
V_{IH}max	Maximum Input High Level Voltage Value
V_{IH}min	Minimum Input High Level Voltage Value
V_{IL}max	Maximum Input Low Level Voltage Value
V_{IL}min	Minimum Input Low Level Voltage Value
V_{OH}max	Maximum Output High Level Voltage Value
V_{OH}min	Minimum Output High Level Voltage Value

V_{OL}max	Maximum Output Low Level Voltage Value
V_{OL}min	Minimum Output Low Level Voltage Value
VSWR	Voltage Standing Wave Ratio
WCDMA	Wideband Code Division Multiple Access
WLAN	Wireless Local Area Network

9 Appendix B GPRS Coding Schemes

Table 34: Description of Different Coding Schemes

Scheme	CS-1	CS-2	CS-3	CS-4
Code Rate	1/2	2/3	3/4	1
USF	3	3	3	3
Pre-coded USF	3	6	6	12
Radio Block excl.USF and BCS	181	268	312	428
BCS	40	16	16	16
Tail	4	4	4	-
Coded Bits	456	588	676	456
Punctured Bits	0	132	220	-
Data Rate Kb/s	9.05	13.4	15.6	21.4

10 Appendix C GPRS Multi-slot Classes

Twenty-nine classes of GPRS multi-slot modes are defined for MS in GPRS specification. Multi-slot classes are product dependent, and determine the maximum achievable data rates in both the uplink and downlink directions. Written as 3+1 or 2+2, the first number indicates the amount of downlink timeslots, while the second number indicates the amount of uplink timeslots. The active slots determine the total number of slots the GPRS device can use simultaneously for both uplink and downlink communications.

The description of different multi-slot classes is shown in the following table.

Table 35: GPRS Multi-slot Classes

Multislot Class	Downlink Slots	Uplink Slots	Active Slots
1	1	1	2
2	2	1	3
3	2	2	3
4	3	1	4
5	2	2	4
6	3	2	4
7	3	3	4
8	4	1	5
9	3	2	5
10	4	2	5
11	4	3	5
12	4	4	5

13	3	3	NA
14	4	4	NA
15	5	5	NA
16	6	6	NA
17	7	7	NA
18	8	8	NA
19	6	2	NA
20	6	3	NA
21	6	4	NA
22	6	4	NA
23	6	6	NA
24	8	2	NA
25	8	3	NA
26	8	4	NA
27	8	4	NA
28	8	6	NA
29	8	8	NA
30	5	1	6
31	5	2	6
32	5	3	6
33	5	4	6

11 Appendix D EDGE Modulation and Coding Schemes

Table 36: EDGE Modulation and Coding Schemes

Coding Scheme	Modulation	Coding Family	1 Timeslot	2 Timeslot	4 Timeslot
CS-1:	GMSK	/	9.05kbps	18.1kbps	36.2kbps
CS-2:	GMSK	/	13.4kbps	26.8kbps	53.6kbps
CS-3:	GMSK	/	15.6kbps	31.2kbps	62.4kbps
CS-4:	GMSK	/	21.4kbps	42.8kbps	85.6kbps
MCS-1	GMSK	C	8.80kbps	17.60kbps	35.20kbps
MCS-2	GMSK	B	11.2kbps	22.4kbps	44.8kbps
MCS-3	GMSK	A	14.8kbps	29.6kbps	59.2kbps
MCS-4	GMSK	C	17.6kbps	35.2kbps	70.4kbps
MCS-5	8-PSK	B	22.4kbps	44.8kbps	89.6kbps
MCS-6	8-PSK	A	29.6kbps	59.2kbps	118.4kbps
MCS-7	8-PSK	B	44.8kbps	89.6kbps	179.2kbps
MCS-8	8-PSK	A	54.4kbps	108.8kbps	217.6kbps
MCS-9	8-PSK	A	59.2kbps	118.4kbps	236.8kbps

12 Appendix E Certification List

Table 37: Certification List

Country or Operator	Comment	Certification
Australia Government RCM	2 months	
Australia Telstra	4 months(need RCM & GCF)	
Australia Vodafone	3 months(need FCC & PTCRB)	
Brazil Government ANATEL	5 months	
Brazil Vivo	Modules do not need to do Vivo certification.	
Canada Government IC	2 months	
Canada Rogers	3 months(need FCC & PTCRB)	
Europe GCF/R&TTE (CE)	GCF: 3 months CE: 2 months	
Europe RED	2 months	
France SFR (Vodafone)	3 months(need CE & GCF)	
Germany Vodafone	3 months(need CE & GCF)	
Ireland Vodafone	3 months(need CE & GCF)	
Italy Vodafone	3 months(need CE & GCF)	
Mexico COFETEL Government (new name IFT)	IFETEL：6~8 weeks(based on FCC)	
Netherland Vodafone	3 months(need CE & GCF)	
South Africa ICASA Gov.	3~6 months(based on CE)	
Spain Vodafone	3 months(need CE & GCF)	

UK Vodafone	3 months(need CE & GCF)
USA FCC/IC/PTCRB/UL Gov.	FCC/IC: 2 months PTCRB: 3 months UL: Modules do not need to do UL.
USA AT&T	5~6 Months(need FCC & PTCRB).

FCC KDB996369 D03v01 Requirements

List of applicable FCC rules

FCC Part 15 Subpart B, Part 22 Subpart H, Part 24 Subpart E

Summarize the specific operational use conditions

Not Applicable

Limited module procedures

Not Applicable

Trace antenna designs

Refer to Manual Section 4

RF exposure considerations

Refer to FCC certification requirements

Antennas

Technology	Frequency Range (MHz)	Antenna Type	Max Peak Gain (dBi)
GSM850	824.2 ~ 848.8	Dipole	2.29
PCS1900	1850.2 ~ 1909.8		1.59
WCDMA Band II	1852.4 ~ 1907.6		1.59
WCDMA Band V	826.4 ~ 846.6		2.29

Label and compliance information

Refer to FCC Label

Information on test modes and additional testing requirements

Not Applicable

Additional testing, Part 15 Subpart B disclaimer

Refer to FCC 15B Report

FCC Certification Requirements.

According to the definition of mobile and fixed device is described in Part 2.1091(b), this device is a mobile device.

And the following conditions must be met:

1. This Modular Approval is limited to OEM installation for mobile and fixed applications only. The antenna installation and operating configurations of this transmitter, including any applicable source-based time-averaging duty factor, antenna gain and cable loss must satisfy MPE categorical Exclusion Requirements of 2.1091.
2. The EUT is a mobile device; maintain at least a 20 cm separation between the EUT and the user's body and must not transmit simultaneously with any other antenna or transmitter.
3. A label with the following statements must be attached to the host end product: This device contains FCC ID: XMR202009UG89.
4. This module must not transmit simultaneously with any other antenna or transmitter
5. The host end product must include a user manual that clearly defines operating requirements and conditions that must be observed to ensure compliance with current FCC RF exposure guidelines.

For portable devices, in addition to the conditions 3 through 6 described above, a separate approval is required to satisfy the SAR requirements of FCC Part 2.1093

If the device is used for other equipment that separate approval is required for all other operating configurations, including portable configurations with respect to 2.1093 and different antenna configurations.

For this device, OEM integrators must be provided with labeling instructions of finished products. Please refer to KDB784748 D01 v07, section 8. Page 6/7 last two paragraphs:

A certifed modular has the option to use a permanently affixed label, or an electronic label. For a permanently affixed label, the module must be labeled with an FCC ID - Section 2.926 (see 2.2 Certification (labeling requirements) above). The OEM manual must provide clear instructions explaining to the OEM the labeling requirements, options and OEM user manu al instructions that are required (see next paragraph).

For a host using a certified modular with a standard fixed label, if (1) the module's FCC ID is not visible when installed in the host, or (2) if the host is marketed so that end users do not have straightforward commonly used methods for access to remove the module so that the FCC ID of the module is visible; then an additional permanent label referring to the enclosed module: "Contains Transmitter Module FCC ID: XMR202009UG89" or "Contains FCC ID: XMR202009UG89" must be used. The host OEM user manual must also contain clear instructions on how end users can find and/or access the module and the FCC ID.

The final host / module combination may also need to be evaluated against the FCC Part 15B criteria for unintentional radiators in order to be properly authorized for operation as a Part 15 digital device.

The user's manual or instruction manual for an intentional or unintentional radiator shall caution the user that changes or modifications not expressly approved by the party responsible for compliance could void the user's authority to operate the equipment. In cases where the manual is provided only in a form other than paper, such as on a computer disk or over the Internet, the information required by this section may be included in the manual in that alternative form,

provided the user can reasonably be expected to have the capability to access information in that form.
This device complies with part 15 of the FCC Rules. Operation is subject to the following two conditions:
(1) This device may not cause harmful interference, and (2) this device must accept any interference received, including interference that may cause undesired operation.
Changes or modifications not expressly approved by the manufacturer could void the user's authority to operate the equipment.

This equipment has been tested and found to comply with the limits for a Class B digital device, pursuant to part 15 of the FCC Rules. These limits are designed to provide reasonable protection against harmful interference in a residential installation. This equipment generates, uses and can radiate radio frequency energy and, if not installed and used in accordance with the instructions, may cause harmful interference to radio communications. However, there is no guarantee that interference will not occur in a particular installation. If this equipment does cause harmful interference to radio or television reception, which can be determined by turning the equipment off and on, the user is encouraged to try to correct the interference
by one or more of the following measures:

- Reorient or relocate the receiving antenna.
- Increase the separation between the equipment and receiver.
- Connect the equipment into an outlet on a circuit different from that to which the receiver is connected.
- Consult the dealer or an experienced radio/ TV technician for help.

IC Statement

IRSS-GEN
This device complies with Industry Canada licence-exempt RSS standard(s). Operation is subject to the following two conditions: (1) this device may not cause interference, and (2) this device must accept any interference, including interference that may cause undesired operation of the device.

Le présent appareil est conforme aux CNR d'Industrie Canada applicables aux appareils radio exempts de licence. L'exploitation est autorisée aux deux conditions suivantes : (1) l'appareil ne doit pas produire de brouillage, et (2) l'utilisateur de l'appareil doit accepter tout brouillage radioélectrique subi, même si le brouillage est susceptible d'en compromettre le fonctionnement.

Antennas

Technology	Frequency Range (MHz)	Antenna Type	Max Peak Gain (dBi)
GSM850	824.2 ~ 848.8	Dipole	2.29
PCS1900	1850.2 ~ 1909.8		1.59
WCDMA Band II	1852.4 ~ 1907.6		1.59
WCDMA Band V	826.4 ~ 846.6		2.29

Antennes

Technologie	Gamme de fréquences (MHz)	Type d'antenne	Gain de crête maximum (dBi)
GSM850	824.2 ~ 848.8	Dipôle	2.29
PCS1900	1850.2 ~ 1909.8		1.59
WCDMA Bande II	1852.4 ~ 1907.6		1.59
WCDMA Bande V	826.4 ~ 846.6		2.29

Radiation Exposure Statement:
The EUT is a mobile device; maintain at least a 20 cm separation between the EUT and the user's body and must not transmit simultaneously with any other antenna or transmitter.

Déclarationd'exposition aux radiations:
L'EST est un appareil mobile; maintenir une distance d'au moins 20 cm entre l'EST et le corps de l'utilisateur et ne pas émettre simultanément avec une autre antenne ou un autre émetteur.

The host product shall be properly labelled to identify the modules within the host product.
The Innovation, Science and Economic Development Canada certification label of a module shall be clearly visible at all times when installed in the host product; otherwise, the host product must be labeled to display the Innovation, Science and Economic Development Canada certification number for the module, preceded by the word “Contains" or similar wording expressing the same meaning, as follows: “Contains IC: 10224A-202009UG89” or "where: 10224A-202009UG89 is the module's certification number".

Le produit hôte doit être correctement étiqueté pour identifier les modules dans le produit hôte. L'étiquette de certification d'Innovation, Sciences et Développement économique Canada d'un module doit être clairement visible en tout temps lorsqu'il est installé dans le produit hôte; sinon, le produit hôte doit être étiqueté pour afficher le numéro de certification d'Innovation, Sciences et Développement économique Canada pour le module, précédé du mot «Contient» ou d'un libellé similaire exprimant le même sens, comme suit: Contient IC: 10224A-202009UG89 ou "où: 10224A-202009UG89 est le numéro de certification du module".