EG91 Series

Hardware Design

LTE Standard Module Series

Version: 2.1

Date: 2021-11-05

Status: Released

At Quectel, our aim is to provide timely and comprehensive services to our customers. If you require any assistance, please contact our headquarters:

Quectel Wireless Solutions Co., Ltd.
Building 5, Shanghai Business Park Phase III (Area B), No.1016 Tianlin Road, Minhang District, Shanghai 200233, China
Tel: +86 21 5108 6236
Email: info@quectel.com

Or our local offices. For more information, please visit:
http://www.quectel.com/support/sales.htm.

For technical support, or to report documentation errors, please visit:
http://www.quectel.com/support/technical.htm.
Or email us at: support@quectel.com.

Legal Notices

We offer information as a service to you. The provided information is based on your requirements and we make every effort to ensure its quality. You agree that you are responsible for using independent analysis and evaluation in designing intended products, and we provide reference designs for illustrative purposes only. Before using any hardware, software or service guided by this document, please read this notice carefully. Even though we employ commercially reasonable efforts to provide the best possible experience, you hereby acknowledge and agree that this document and related services hereunder are provided to you on an “as available” basis. We may revise or restate this document from time to time at our sole discretion without any prior notice to you.

Use and Disclosure Restrictions

License Agreements

Documents and information provided by us shall be kept confidential, unless specific permission is granted. They shall not be accessed or used for any purpose except as expressly provided herein.

Copyright

Our and third-party products hereunder may contain copyrighted material. Such copyrighted material shall not be copied, reproduced, distributed, merged, published, translated, or modified without prior written consent. We and the third party have exclusive rights over copyrighted material. No license shall be granted or conveyed under any patents, copyrights, trademarks, or service mark rights. To avoid ambiguities, purchasing in any form cannot be deemed as granting a license other than the normal non-exclusive, royalty-free license to use the material. We reserve the right to take legal action for noncompliance with abovementioned requirements, unauthorized use, or other illegal or malicious use of the material.

Trademarks

Except as otherwise set forth herein, nothing in this document shall be construed as conferring any rights to use any trademark, trade name or name, abbreviation, or counterfeit product thereof owned by Quectel or any third party in advertising, publicity, or other aspects.

Third-Party Rights

This document may refer to hardware, software and/or documentation owned by one or more third parties ("third-party materials"). Use of such third-party materials shall be governed by all restrictions and obligations applicable thereto.

We make no warranty or representation, either express or implied, regarding the third-party materials, including but not limited to any implied or statutory, warranties of merchantability or fitness for a particular purpose, quiet enjoyment, system integration, information accuracy, and non-infringement of any third-party intellectual property rights with regard to the licensed technology or use thereof. Nothing herein constitutes a representation or warranty by us to either develop, enhance, modify, distribute, market, sell, offer for sale, or otherwise maintain production of any our products or any other hardware, software, device, tool, information, or product. We moreover disclaim any and all warranties arising from the course of dealing or usage of trade.

Disclaimer

a) We acknowledge no liability for any injury or damage arising from the reliance upon the information.

b) We shall bear no liability resulting from any inaccuracies or omissions, or from the use of the information contained herein.

c) While we have made every effort to ensure that the functions and features under development are free from errors, it is possible that they could contain errors, inaccuracies, and omissions. Unless otherwise provided by valid agreement, we make no warranties of any kind, either implied or express, and exclude all liability for any loss or damage suffered in connection with the use of features and functions under development, to the maximum extent permitted by law, regardless of whether such loss or damage may have been foreseeable.

d) We are not responsible for the accessibility, safety, accuracy, availability, legality, or completeness of information, advertising, commercial offers, products, services, and materials on third-party websites and third-party resources.

Copyright © Quectel Wireless Solutions Co., Ltd. 2021. All rights reserved.

Safety Information

The following safety precautions must be observed during all phases of operation, such as usage, service or repair of any cellular terminal or mobile incorporating the module. Manufacturers of the cellular terminal should notify users and operating personnel of the following safety information by incorporating these guidelines into all manuals of the product. Otherwise, Quectel assumes no liability for customers' failure to comply with these precautions.

	Full attention must be paid to driving at all times in order to reduce the risk of an accident. Using a mobile while driving (even with a handsfree kit) causes distraction and can lead to an accident. Please comply with laws and regulations restricting the use of wireless devices while driving.
	Switch off the cellular terminal or mobile before boarding an aircraft. The operation of wireless appliances in an aircraft is forbidden to prevent interference with communication systems. If there is an Airplane Mode, it should be enabled prior to boarding an aircraft. Please consult the airline staff for more restrictions on the use of wireless devices on an aircraft.
	Wireless devices may cause interference on sensitive medical equipment, so please be aware of the restrictions on the use of wireless devices when in hospitals, clinics or other healthcare facilities.
	Cellular terminals or mobiles operating over radio signal and cellular network cannot be guaranteed to connect in certain conditions, such as when the mobile bill is unpaid or the (U)SIM card is invalid. When emergency help is needed in such conditions, use emergency call if the device supports it. In order to make or receive a call, the cellular terminal or mobile must be switched on in a service area with adequate cellular signal strength. In an emergency, the device with emergency call function cannot be used as the only contact method considering network connection cannot be guaranteed under all circumstances.
	The cellular terminal or mobile contains a transceiver. When it is ON, it receives and transmits radio frequency signals. RF interference can occur if it is used close to TV sets, radios, computers or other electric equipment.
	In locations with explosive or potentially explosive atmospheres, obey all posted signs and turn off wireless devices such as mobile phone or other cellular terminals. Areas with explosive or potentially explosive atmospheres include fuelling areas, below decks on boats, fuel or chemical transfer or storage facilities, and areas where the air contains chemicals or particles such as grain, dust or

metal powders.

About the Document

Revision History

Version	Date	Author	Description
1.0	2017-03-22	Barret XIONG/ Rex WANG	Initial
1.1	2018-01-23	Barret XIONG/ Rex WANG	1. Added band B28A. 2. Updated the description of UMTS and GSM features in Table 2. 3. Updated the functional diagram in Figure 1. 4. Updated module operating frequencies in Table 21. 5. Updated current consumption in Table 26. 6. Updated RF output power in Table 27. 7. Updated the conducted RF receiving sensitivity in Table 28. 8. Updated the GPRS multi-slot classes in Table 33. 9. Added thermal consideration in Chapter 5.8 10. Added a GND pad in each of the four corners of the module's footprint in Chapter 6.2. 11. Updated storage information in Chapter 7.1. 12. Added packaging information in Chapter 7.3.
1.2	2018-03-14	Barret XIONG/ Rex WANG	1. Added the description of EG91-NA. 2. Updated the functional diagram in Figure 1. 3. Updated pin assignment in Figure 2. 4. Updated GNSS function in Table 1. 5. Updated GNSS Features in Table 2. 6. Updated reference circuit of USB interface in Figure 21. 7. Added description of GNSS receiver in Chapter 4. 8. Updated pin definition of RF antenna in Table 21.

			9. Updated module operating frequencies in Table 22. 10. Added description of GNSS antenna interface in Chapter 5.2. 11. Updated antenna requirements in Table 25. 12. Updated RF output power in Table 32.
1.3	2019-02-03	Barret XIONG/ Rex WANG	1. Added new variants EG91-NS, EG91-V, EG91-EC and related contents. 2. Opened pin 24 as ADC0 and added related contents. 3. Updated functional diagram (Figure 1) 4. Updated pin assignment (Figure 2) 5. Updated GNSS features (Table 2) 6. Added USB_BOOT interface information (Chapter 3.18) 7. Updated storage information (Chapter 8.1) 8. Updated module operating frequencies (Table 23) 9. Updated antenna requirements (Table 26) 10. Added current consumption of EG91-NS, EG91-V and EG91-EC (Table 32, 33 and 34) 11. Added conducted RF receiving sensitivity of EG91-NS, EG91-V and EG91-EC (Table 40, 41 and 42)
1.4	2019-03-29	Barret XIONG/ Rex WANG	1. Modified module name EG91-EC to EG91-EX, and EG91-V to EG91-VX 2. Added newly supported 9.x of Android USB serial driver (Table 2) 3. Modified the reflow temperature range as . 238ºC to 245ºC (Chapter 8.2)
1.5	2019-05-24	Barret XIONG/ Rex WANG	1. Updated comment of RF antenna (Table 4) 2. Updated EG91-EX current consumption (Table 36) 3. Updated EG91-EX conducted RF receiving sensitivity (Table 44)
1.6	2019-07-05	Barret XIONG/ Rex WANG	1. Updated supported protocols (Table 2). 2. Updated timing of turning on module (Figure 12). 3. DFOTA is developed. 4. Updated description of USB_BOOT interface and timing sequence for entering emergency download mode (Chapter 3.18 and Figure 29).

1.7	2019-08-09	Barret XIONG/ Rex WANG	1. Added ThreadX variant EG91-NAX and updated related contents (Table 1 and 4, Chapter 2.2, 2.3, 3.2 and 5). 2. Added related notes of SPI interface not supported on ThreadX modules (Chapter 3.1, 3.3 and 3.13). 3. Added current consumption of EG91-NAX (Table 37). 4. Updated EG91-NA conducted RF receiving sensitivity (Table 41). 5. Updated EG91-NS conducted RF receiving sensitivity (Table 42). 6. Added EG91-NAX conducted RF receiving sensitivity (Table 45).
1.8	2019-11-07	Barret XIONG/ Rex WANG	1. Removed related information of ThreadX OS. 2. Updated the supported USB serial drivers (Table 2) 3. Updated the notes for GNSS performance (Chapter 4.2). 4. Updated the AT command be used to disable the receive diversity (Chapter 5.1.3). 5. Updated the current consumption of LTE-FDD B13 (Table 43).
1.9	2020-10-21	Barret XIONG/ Rex WANG	1. Removed related information of EG91-NS module according to product promotion strategy. 2. Added EG91-AUX and related information (Table 1, 39 and 48). 3. Added EG91-NAXD and related information (Table 1, 37 and 47). 4. Updated pin assignment (Top View) (Figure 2) 5. Updated the AT command for the operation of ANT_MAIN and ANT_DIV (Chapter 5.1.3). 6. Added EG91-EX/-NA/-VX/-NAX/-NAXD/-AUX bottom dimensons (Figure 43). 7. Added the note about the standard that the package warpage level of the module conforms to (Chapter 7.1). 8. Updated top view of the module (Figure 45). 9. Added EG91-EX/-NA/-VX/-NAX/-NAXD/-AUX bottom view (Figure 47).

			10. Updated module storage information (Chapter 8.1). 11. Updated the cooling down slope of reflow soldering thermal profile; Added a note to clarify the precautions if a conformal coating is necessary for the module (Chapter 8.2).
2.0	2021-07-01	Barret XIONG/ Rex WANG	1. Added the related information of EG91-NAL in the whole document. 2. Added the note of BOOT_CONFIG (Chapter 3.3&3.7.1)
2.1	2021-07-28	Barret XIONG/ Rex WANG	1. Updated supported USB serial drivers for Linux (Table 2). 2. Updated EG91-E bottom dimensions (top view) (Figure 42). 3. Updated EG91-AUX/-EX/-NA/-NAL/-NAX/ -NAXD/-VX bottom dimensions (top view) (Figure 43).
	2021-11-05	Lark YU/ Frank WANG	Added the sub-module of EG91-NAXDL.

Contents

Safety Information 3
About the Document 5
Contents 9
Table Index 11
Figure Index 13

1 Introduction 15

2 Product Concept 17
2.1. General Description 17
2.2. Key Features 18
2.3. Functional Diagram 21
2.4. Evaluation Board 22

3 Application Interfaces 23
3.1. General Description 23
3.2. Pin Assignment 24
3.3. Pin Description 25
3.4. Operating Modes 32
3.5. Power Saving 32
3.5.1. Sleep Mode 32
3.5.2. Airplane Mode 35
3.6. Power Supply 36
3.6.1. Power Supply Pins 36
3.6.2. Decrease Voltage Drop 36
3.6.3. Reference Design for Power Supply 38
3.6.4. Monitor the Power Supply 38
3.7. Power-on/off Scenarios 38
3.7.1. Turn on Module Using the PWRKEY 38
3.7.2. Turn off Module 40
3.8. Reset the Module 42
3.9. (U)SIM Interfaces 43
3.10. USB Interface 46
3.11. UART Interfaces 47
3.12. PCM and I2C Interfaces 49
3.13. SPI Interface 52
3.14. Network Status Indication 53
3.15. STATUS 54
3.16. ADC Interface 54
3.17. Behaviors of RI 55
3.18. USB_BOOT Interface 56

4 GNSS Receiver 58

4.1. General Description....58
4.2. GNSS Performance....58
4.3. Layout Guidelines....59

5 Antenna Interfaces....60
5.1. Main/Rx-diversity Antenna Interfaces....60
5.1.1. Pin Definition....60
5.1.2. Operating Frequency....61
5.1.3. Reference Design of RF Antenna Interface....62
5.2. GNSS Antenna Interface....63
5.3. Reference Design of RF Layout....64
5.4. Antenna Installation....66
5.4.1. Antenna Requirement....66
5.4.2. Recommended RF Connector for Antenna Installation....67

6 Reliability, Radio and Electrical Characteristics....69
6.1. Absolute Maximum Ratings....69
6.2. Power Supply Ratings....69
6.3. Operating and Storage Temperatures....70
6.4. Current Consumption....70
6.5. RF Output Power....83
6.6. RF Receiving Sensitivity....84
6.7. Electrostatic Discharge....88
6.8. Thermal Consideration....89

7 Mechanical Dimensions....92
7.1. Mechanical Dimensions of the Module....92
7.2. Recommended Footprint....95
7.3. Top and Bottom Views of the Module....96

8 Storage, Manufacturing and Packaging....98
8.1. Storage....98
8.2. Manufacturing and Soldering....99
8.3. Packaging....100

9 Appendix References....103

Table Index

Table 1: Frequency Bands of EG91 Series Module.... 18
Table 2: Key Features of EG91 Series Module.... 19
Table 3: Definition of I/O Parameters.... 25
Table 4: Pin Description.... 26
Table 5: Overview of Operating Modes.... 32
Table 6: Pin Definition of VBAT and GND.... 36
Table 7: Pin Definition of PWRKEY.... 39
Table 8: Pin Definition of RESET_N.... 42
Table 9: Pin Definition of (U)SIM Interfaces.... 43
Table 10: Pin Definition of USB Interface.... 46
Table 11: Pin Definition of Main UART Interfaces.... 47
Table 12: Pin Definition of Debug UART Interface.... 48
Table 13: Pin Definition of PCM and I2C Interfaces.... 51
Table 14: Pin Definition of SPI Interface.... 52
Table 15: Pin Definition of Network Status Indicator.... 53
Table 16: Working State of Network Status Indicator.... 53
Table 17: Pin Definition of STATUS.... 54
Table 18: Pin Definition of ADC Interface.... 54
Table 19: Characteristics of ADC Interface.... 55
Table 20: Default Behaviors of RI.... 55
Table 21: Pin Definition of USB_BOOT Interface.... 56
Table 22: GNSS Performance.... 58
Table 23: Pin Definition of RF Antenna.... 60
Table 24: Module Operating Frequencies.... 61
Table 25: Pin Definition of GNSS Antenna Interface.... 63
Table 26: GNSS Frequency.... 63
Table 27: Antenna Requirements.... 66
Table 28: Absolute Maximum Ratings.... 69
Table 29: Power Supply Ratings.... 69
Table 30: Operating and Storage Temperatures.... 70
Table 31: EG91-AUX Current Consumption.... 70
Table 32: EG91-E Current Consumption.... 74
Table 33: EG91-EX Current Consumption.... 75
Table 34: EG91-NA Current Consumption.... 77
Table 35: EG91-NAL Current Consumption.... 79
Table 36: EG91-NAX Current Consumption.... 79
Table 37: EG91-NAXD Current Consumption.... 80
Table 38: EG91-NAXDL Current Consumption.... 81
Table 39: EG91-VX Current Consumption.... 82
Table 40: GNSS Current Consumption of EG91 Series Module.... 83
Table 41: RF Output Power.... 83
Table 42: EG91-AUX Conducted RF Receiving Sensitivity.... 84

Table 43: EG91-E Conducted RF Receiving Sensitivity.....85
Table 44: EG91-EX Conducted RF Receiving Sensitivity.....85
Table 45: EG91-NA Conducted RF Receiving Sensitivity.....86
Table 46: EG91-NAL Conducted RF Receiving Sensitivity.....86
Table 47: EG91-NAX Conducted RF Receiving Sensitivity.....87
Table 48: EG91-NAXD Conducted RF Receiving Sensitivity.....87
Table 49: EG91-NAXDL Conducted RF Receiving Sensitivity.....88
Table 50: EG91-VX Conducted RF Receiving Sensitivity.....88
Table 51: Electrostatic Discharge Characteristics (Temperature: 25 ºC, Humidity: 45 %).....89
Table 52: Recommended Thermal Profile Parameters.....100
Table 53: Related Documents.....103
Table 54: Terms and Abbreviations.....103

Figure Index

Figure 1: Functional Diagram 22
Figure 2: Pin Assignment (Top View) 24
Figure 3: Sleep Mode Application via UART 33
Figure 4: Sleep Mode Application with USB Remote Wakeup 33
Figure 5: Sleep Mode Application with RI 34
Figure 6: Sleep Mode Application without Suspend Function 35
Figure 7: Power Supply Limits during Burst Transmission 37
Figure 8: Star Structure of Power Supply 37
Figure 9: Reference Circuit of Power Supply 38
Figure 10: Turn on the Module Using Driving Circuit 39
Figure 11: Turn on the Module Using A Button 39
Figure 12: Power-up Timing 40
Figure 13: Power-down Timing 41
Figure 14: Reference Circuit of RESET_N by Using Driving Circuit 42
Figure 15: Reference Circuit of RESET_N by Using A Button 42
Figure 16: Timing of Resetting the Module 43
Figure 17: Reference Circuit of (U)SIM Interface with an 8-pin (U)SIM Card Connector 44
Figure 18: Reference Circuit of (U)SIM Interface with a 6-pin (U)SIM Card Connector 45
Figure 19: Reference Circuit of USB Interface 46
Figure 20: Reference Circuit with Translator Chip 48
Figure 21: Reference Circuit with Transistor Circuit 49
Figure 22: Primary Mode Timing 50
Figure 23: Auxiliary Mode Timing 50
Figure 24: Reference Circuit of PCM Application with Audio Codec 51
Figure 25: Reference Circuit of SPI Interface with Peripherals 52
Figure 26: Reference Circuit of Network Status Indication 53
Figure 27: Reference Circuit of STATUS 54
Figure 28: Reference Circuit of USB_BOOT Interface 56
Figure 29: Emergency Download Mode Timing 57
Figure 30: Reference Circuit of RF Antenna Interface 62
Figure 31: Reference Circuit of GNSS Antenna 63
Figure 32: Microstrip Design on a 2-layer PCB 64
Figure 33: Coplanar Waveguide Design on a 2-layer PCB 64
Figure 34: Coplanar Waveguide Design on a 4-layer PCB (Layer 3 as Reference Ground) 65
Figure 35: Coplanar Waveguide Design on a 4-layer PCB (Layer 4 as Reference Ground) 65
Figure 36: Dimensions of the U.FL-R-SMT Connector (Unit: mm) 67
Figure 37: Mechanicals of U.FL-LP Connectors 67
Figure 38: Space Factor of Mated Connector (Unit: mm) 68
Figure 39: Referenced Heatsink Design (Heatsink at the Top of the Module) 90
Figure 40: Referenced Heatsink Design (Heatsink at the Backside of Customers' PCB) 90
Figure 41: Module Top and Side Dimensions 92

Figure 42: EG91-E Bottom Dimensions (Top View)..... 93
Figure 43: EG91-AUX/-EX/-NA/-NAL/-NAX/-NAXD/-NAXDL/-VX Bottom Dimensions (Top View)..... 94
Figure 44: Recommended Footprint (Top View)..... 95
Figure 45: Top View of the Module..... 96
Figure 46: EG91-E Bottom View..... 96
Figure 47: EG91-AUX/-EX/-NA/-NAL/-NAX/-NAXD/-NAXDL/-VX Bottom View..... 97
Figure 48: Recommended Reflow Soldering Thermal Profile..... 99
Figure 49: Tape Dimensions..... 101
Figure 50: Reel Dimensions..... 101
Figure 51: Tape and Reel Directions..... 102

1 Introduction

This document defines the EG91 series module and describes its air interface and hardware interface which are connected with your applications.

This document can help you quickly understand module interface specifications, electrical and mechanical details, as well as other related information of EG91 series module. With application note and user guide, you can use EG91 series module to design and set up mobile applications easily.

FCC Certification Requirements.
According to the definition of mobile and fixed device is described in Part 2.1091(b), this device is a mobile device.
And the following conditions must be met:
1. This Modular Approval is limited to OEM installation for mobile and fixed applications only. The antenna installation and operating configurations of this transmitter, including any applicable source-based timeaveraging duty factor, antenna gain and cable loss must satisfy MPE categorical Exclusion Requirements of 2.1091.
2. The EUT is a mobile device; maintain at least a 20 cm separation between the EUT and the user's body and must not transmit simultaneously with any other antenna or transmitter.
3. A label with the following statements must be attached to the host end product: This device contains FCC ID: XMR2021EG91NAXDL
4. To comply with FCC regulations limiting both maximum RF output power and human exposure to RF radiation, maximum antenna gain (including cable loss) must not exceed:

- ❒ LTE Band 2 :≤8.500dBi
- ❒ LTE Band 4:≤5.500dBi
- ❒ LTE Band 5 :≤9.908dBi
- ❒ LTE Band 12 :≤9.197 dBi
- ❒ LTE Band 13:≤9.656dBi
- ❒ LTE Band 25:≤8.000dBi
- ❒ LTE Band 26(Part 22):≤9.408dBi
- ❒ LTE Band 26(Part 90):≤9.361dBi

5. This module must not transmit simultaneously with any other antenna or transmitter
6. The host end product must include a user manual that clearly defines operating requirements and conditions that must be observed to ensure compliance with current FCC RF exposure guidelines.
For portable devices, in addition to the conditions 3 through 6 described above, a separate approval is required to satisfy the SAR requirements of FCC Part 2.1093
If the device is used for other equipment that separate approval is required for all other operating configurations, including portable configurations with respect to 2.1093 and different antenna configurations.

For this device, OEM integrators must be provided with labeling instructions of finished products.
Please refer to KDB784748 D01 v07, section 8. Page 6/7 last two paragraphs:
A certified modular has the option to use a permanently affixed label, or an electronic label. For a permanently affixed label, the module must be labeled with an FCC ID - Section 2.926 (see 2.2 Certification (labeling requirements) above). The OEM manual must provide clear instructions explaining to the OEM the labeling requirements, options and OEM user manual instructions that are required (see next paragraph).
For a host using a certified modular with a standard fixed label, if (1) the module's FCC ID is not visible when installed in the host, or (2) if the host is marketed so that end users do not have straightforward commonly used methods for access to remove the module so that the FCC ID of the module is visible; then an additional permanent label referring to the enclosed module: "Contains Transmitter Module FCC ID: XMR2021EG91NAXDL" or "Contains FCC ID: XMR2021EG91NAXDL" must be used. The host OEM user manual must also contain clear instructions on how end users can find and/or access the module and the FCC ID.
The final host / module combination may also need to be evaluated against the FCC Part 15B criteria for unintentional radiators in order to be properly authorized for operation as a Part 15 digital device.
The user's manual or instruction manual for an intentional or unintentional radiator shall caution the user that changes or modifications not expressly approved by the party responsible for compliance could void the user's authority to operate the equipment. In cases where the manual is provided only in a form other than paper, such as on a computer disk or over the Internet, the information required by this section may be included in the manual in that alternative form, provided the user can reasonably be expected to have the capability to access information in that form.
This device complies with part 15 of the FCC Rules. Operation is subject to the following two conditions:
(1) This device may not cause harmful interference, and (2) this device must accept any interference received, including interference that may cause undesired operation.
Changes or modifications not expressly approved by the manufacturer could void the user's authority to operate the equipment.
To ensure compliance with all non-transmitter functions the host manufacturer is responsible for ensuring compliance with the module(s) installed and fully operational. For example, if a host was previously authorized as an unintentional radiator under the Supplier's Declaration of Conformity procedure without a transmitter certified module and a module is added, the host manufacturer is responsible for ensuring that the after the module is installed and operational the host continues to be compliant with the Part 15B unintentional radiator requirements.

Manual Information To the End User

The OEM integrator has to be aware not to provide information to the end user regarding how to install or remove this RF module in the user's manual of the end product which integrates this module. The end user manual shall include all required regulatory information/warning as show in this manual.

IC Statement

IRSS-GEN
"This device complies with Industry Canada's licence-exempt RSSs. Operation is subject to the following two conditions: (1) This device may not cause interference; and (2) This device must accept any interference, including interference that may cause undesired operation of the device." or "Le présent appareil est conforme aux CNR d'Industrie Canada applicables aux appareils radio exempts de licence. L'exploitation est autorisée aux deux conditions suivantes :
1) l'appareil ne doit pas produire de brouillage; 2) l'utilisateur de l'appareil doit accepter tout brouillage radioélectrique subi, même si le brouillage est susceptible d'en compromettre le fonctionnement."
Déclaration sur l'exposition aux rayonnements RF

L'autre utilisé pour l'émetteur doit être installé pour fournir une distance de séparation d'au moins 20 cm de toutes les personnes et ne doit pas être colocalisé ou fonctionner conjointement avec une autre antenne ou un autre émetteur.
The host product shall be properly labeled to identify the modules within the host product.
The Innovation, Science and Economic Development Canada certification label of a module shall be clearly visible at all times when installed in the host product; otherwise, the host product must be labeled to display the Innovation, Science and Economic Development Canada certification number for the module, preceded by the word “Contains” or similar wording expressing the same meaning, as follows:
“Contains IC: 10224A-21EG91NAXDL” or “where: 10224A-21EG91NAXDL is the module’s certification number”.
Le produit hôte doit être correctement étiqueté pour identifier les modules dans le produit hôte.
L'étiquette de certification d'Innovation, Sciences et Développement économique Canada d'un module doit être clairement visible en tout temps lorsqu'il est installédans le produit hôte; sinon, le produit hôte doit porter une étiquette indiquant le numéro de certification d'Innovation, Sciences et Développement économique Canada pour le module, précédé du mot «Contient» ou d'un libellé semblable exprimant la même signification, comme suit:
"Contient IC: 10224A-21EG91NAXDL " ou "où: 10224A-21EG91NAXDL est le numéro de certification du module".

- LTE Band 2 :⩽8.500dBi
- LTE Band 4:⩽5.500dBi
- LTE Band 5 :⩽6.600dBi
- LTE Band 12 :⩽6.110dBi
- LTE Band 13:⩽6.44 dBi
- LTE Band 25:⩽8.000dBi
- LTE Band 26:≤6.06dBi

2 Product Concept

2.1. General Description

EG91 series module is an embedded 4G wireless communication module with receive diversity. It supports LTE-FDD/WCDMA/GSM wireless communication, and provides data connectivity on LTE-FDD, DC-HSDPA, HSPA+, HSDPA, HSUPA, WCDMA, EDGE and GPRS networks. It can also provide voice functionality [1] to meet your specific application demands. The following table shows the frequency bands

[1] EG91 series module contains **Data + Voice** version and **Data-only** version. **Data + Voice** version supports voice and data functions, while **Data-only** version only supports data function.

of EG91 series module.

Table 1: Frequency Bands of EG91 Series Module

Module	LTE Bands (with Rx-diversity)	WCDMA (with Rx-diversity)	GSM	GNSS [2]
EG91-AUX [3]	FDD: B1/B2/B3/B4/B5/B7/B8/ B28/B66	B1/B2/B5/B8	850/900/1800/ 1900 MHz	GPS, GLONASS, BeiDou, Galileo, QZSS
EG91-E	FDD: B1/B3/B7/B8/B20/B28A	B1/B8	900/1800 MHz	-
EG91-EX	FDD:B1/B3/B7/B8/B20/B28	B1/B8	900/1800 MHz	GPS, GLONASS, BeiDou, Galileo, QZSS
EG91-NA	FDD: B2/B4/B5/B12/B13	B2/B4/B5	-	
EG91-NAL	FDD: B2/B4/B5/B12/B13	-	-	
EG91-NAX	FDD: B2/B4/B5/B12/B13/B25/B26	B2/B4/B5	-	
EG91-NAXD	FDD: B2/B4/B5/B12/B13/B25/B26	B2/B4/B5	-	
EG91-NAXDL	FDD: B2/B4/B5/B12/B13/B25/B26	-	-	
EG91-VX	FDD: B4/B13	-	-	

With a compact profile of 29.0 mm × 25.0 mm × 2.3 mm, EG91 series module can meet almost all requirements for M2M applications such as automotive, smart metering, tracking system, security, router, wireless POS, mobile computing device, PDA phone, tablet PC, etc.

EG91 series module is an SMD type module which can be embedded into applications through its 106 LGA pins.

EG91 series module is integrated with internet service protocols like TCP, UDP and PPP. Extended AT commands have been developed for you to use these internet service protocols easily.

2.2. Key Features

[2] GNSS function is optional.
[3] EG91-AUX does not support Rx-diversity.

The following table describes the detailed features of EG91 series module.

Table 2: Key Features of EG91 Series Module

Feature	Details
Power Supply	● Supply voltage: 3.3–4.3 V ● Typical supply voltage: 3.8 V
Transmitting Power	● Class 4 (33 dBm ±2 dB) for GSM850 ● Class 4 (33 dBm ±2 dB) for EGSM900 ● Class 1 (30 dBm ±2 dB) for DCS1800 ● Class 1 (30 dBm ±2 dB) for PCS1900 ● Class E2 (27 dBm ±3 dB) for GSM850 8-PSK ● Class E2 (27 dBm ±3 dB) for EGSM900 8-PSK ● Class E2 (26 dBm ±3 dB) for DCS1800 8-PSK ● Class E2 (26 dBm ±3 dB) for PCS1900 8-PSK ● Class 3 (24 dBm +1/-3 dB) for WCDMA bands ● Class 3 (23 dBm ±2 dB) for LTE-FDD bands
LTE Features	● Support up to non-CA Cat 1 FDD ● Support 1.4/3/5/10/15/20 MHz RF bandwidth ● LTE-FDD: Max. 10 Mbps (DL), Max. 5 Mbps (UL)
UMTS Features	● Support 3GPP Rel-8 DC-HSDPA, HSPA+, HSDPA, HSUPA and WCDMA ● Support QPSK, 16QAM and 64QAM modulation ● DC-HSDPA: Max. 42 Mbps (DL) ● HSUPA: Max. 5.76 Mbps (UL) ● WCDMA: Max. 384 kbps (DL), Max. 384 kbps (UL)
GSM Features	**R99:** ● CSD: 9.6 kbps **GPRS:** ● Support GPRS multi-slot class 33 (33 by default) ● Coding scheme: CS-1, CS-2, CS-3 and CS-4 ● Max. 107 kbps (DL), Max. 85.6 kbps (UL) **EDGE:** ● Support EDGE multi-slot class 33 (33 by default) ● Support GMSK and 8-PSK for different MCS (Modulation and Coding Scheme) ● Downlink coding schemes: MCS 1-9 ● Uplink coding schemes: MCS 1-9 ● Max. 296 kbps (DL)/Max. 236.8 kbps (UL)
Internet Protocol Features	● Support TCP/UDP/PPP/FTP/FTPS/HTTP/HTTPS/NTP/PING/QMI/NITZ/MMS/SMTP/SSL/MQTT/FILE/CMUX/SMTPS protocols ● Support PAP and CHAP protocols for PPP connections

SMS	● Text and PDU modes ● Point-to-point MO and MT ● SMS cell broadcast ● SMS storage: ME by default
(U)SIM Interfaces	● Support 1.8 V and 3.0 V (U)SIM cards
Audio Features	● Support one digital audio interface: PCM interface ● GSM: HR/FR/EFR/AMR/AMR-WB ● WCDMA: AMR/AMR-WB ● LTE: AMR/AMR-WB ● Support echo cancellation and noise suppression
PCM Interface	● Used for audio function with external codec ● Support 16-bit linear data format ● Support long frame synchronization and short frame synchronization ● Support master and slave mode, but must be the master in long frame synchronization
USB Interface	● Compliant with USB 2.0 specification (slave only); the data transfer rate can reach up to 480 Mbps ● Used for AT command communication, data transmission, GNSS NMEA sentences output, software debugging, firmware upgrade and voice over USB ● Support USB serial drivers for: Windows 7/8/8.1/10, Linux 2.6–5.12, Android 4.x–11.x, etc.
UART Interface	**Main UART:** ● Used for AT command communication and data transmission ● Baud rates reach up to 921600 bps, 115200 bps by default ● Support RTS and CTS hardware flow control **Debug UART:** ● Used for Linux console and log output ● 115200 bps baud rate
SPI Interface	● Provides a duplex, synchronous and serial communication link with the peripheral devices. ● Dedicated to one-to-one connection, without chip selection. ● 1.8 V operation voltage with clock rates up to 50 MHz.
Rx-diversity	● Support LTE/WCDMA Rx-diversity
GNSS Features	● Protocol: NMEA 0183 ● Data update rate: 1 Hz by default
AT Commands	● Compliant with *3GPP TS 27.007* and *3GPP TS 27.005* ● Quectel enhanced AT commands
Network Indication	● NETLIGHT pin for network activity status indication
Antenna Interfaces	● Main antenna interface (ANT_MAIN),

	● Rx-diversity antenna (ANT_DIV) [4] ● GNSS antenna (ANT_GNSS) [5]
Physical Characteristics	● Size: (29.0 ±0.15) mm × (25.0 ±0.15) mm × (2.3 ±0.2) mm ● Package: LGA ● Weight: approx. 3.8 g
Temperature Range	● Operating temperature range: -35 °C to +75 °C [6] ● Extended temperature range: -40 °C to +85 °C [7] ● Storage temperature range: -40 °C to +90 °C
Firmware Upgrade	● USB interface ● DFOTA
RoHS	● All hardware components are fully compliant with EU RoHS directive

2.3. Functional Diagram

The following figure shows a block diagram of EG91 series module and illustrates the major functional parts.

- Power management
- Baseband
- DDR + NAND flash
- Radio frequency
- Peripheral interfaces

[4] EG91-AUX does not support Rx-diversity.
[5] GNSS antenna interface is only supported on EG91-AUX/-EX/-NA/-NAL/-NAX/-NAXD/-NAXDL/-VX.
[6] Within operating temperature range, the module is 3GPP compliant.
[7] Within extended temperature range, the module remains the ability to establish and maintain a voice, SMS, data transmission, etc. There is no unrecoverable malfunction. There are also no effects on radio spectrum and no harm to radio network. Only one or more parameters like Pout might reduce in their value and exceed the specified tolerances. When the temperature returns to normal operating temperature levels, the module will meet 3GPP specifications again.

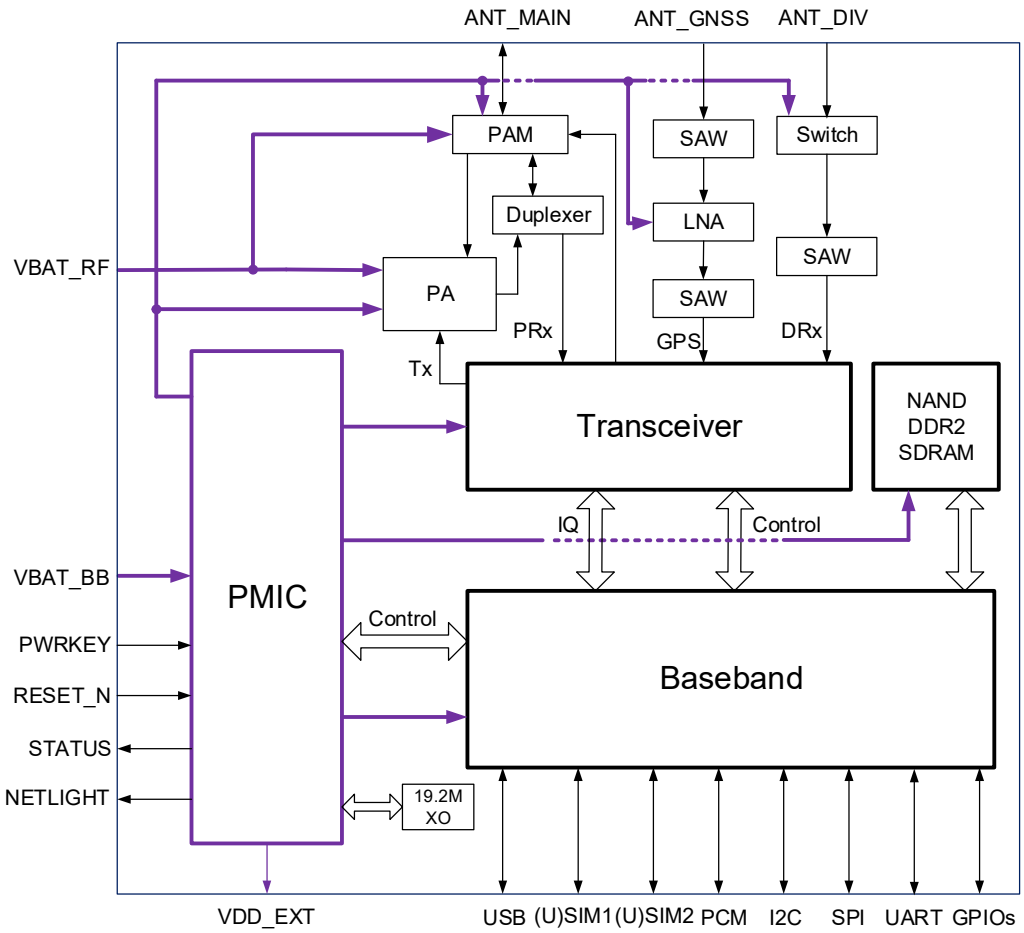

Figure 1: Functional Diagram [8]

2.4. Evaluation Board

Quectel provides a complete set of evaluation tools to facilitate the use and testing of EG91 series module. The evaluation tool kit includes the evaluation board (UMTS&LTE EVB), a USB to RS-232 converter cable, an earphone, antennas and other peripherals. For more details, see ***document [1]***.

[8] GNSS antenna is supported on EG91-AUX/-EX/-NA/-NAL/-NAX/-NAXD/-NAXDL/-VX. Rx-diversity antenna is supported on EG91-E/-EX/-NA/-NAL/-NAX/-NAXD/-NAXDL/-VX, and is not supported on EG91-AUX.

3 Application Interfaces

3.1. General Description

EG91 series module is equipped with 106 LGA pins that can be connected to your cellular application platforms. Sub-interfaces included in these pads are described in detail in the following chapters:

- Power supply
- (U)SIM interfaces
- USB interface
- UART interfaces
- PCM and I2C interfaces
- SPI interface
- Network status indication
- ADC interface
- USB_BOOT interface

3.2. Pin Assignment

The following figure shows the pin assignment of EG91 series module.

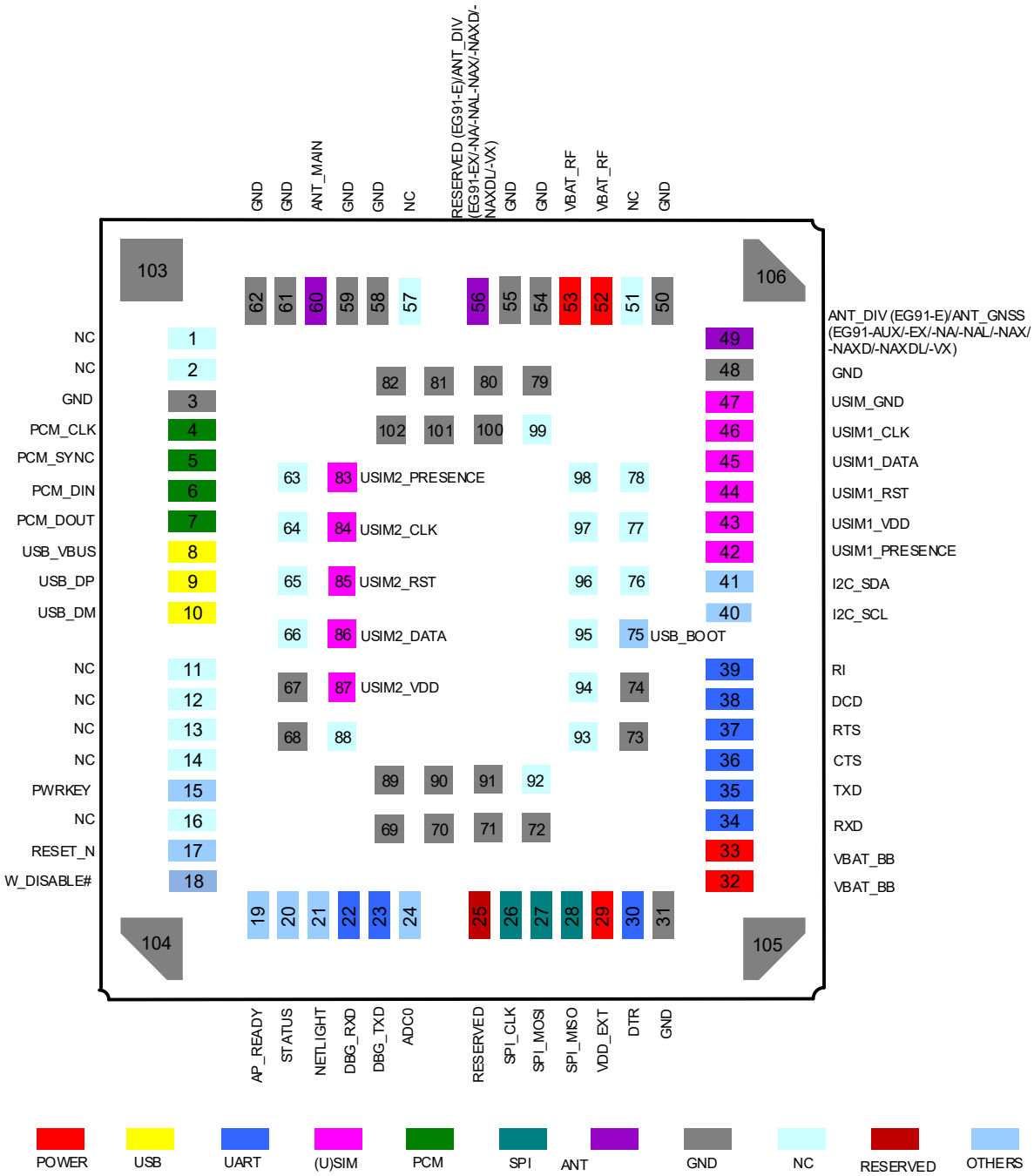

Figure 2: Pin Assignment (Top View)

NOTE

1. PWRKEY output voltage is 0.8 V because of the diode drop in the baseband chipset.
2. Keep all RESERVED pins and unused pins unconnected.
3. GND pins should be connected to ground in the design.
4. Pin 49 is defined as ANT_GNSS on EG91-AUX/-EX/-NA/-NAL/-NAX/-NAXD/-NAXDL/-VX, while it is defined as ANT_DIV on EG91-E.
5. Pin 56 is RESERVED on EG91-E, while it is defined as ANT_DIV on EG91-EX/-NA/-NAL/-NAX/-NAXD/-NAXDL/-VX. Rx-diversity antenna is not supported on EG91-AUX.

3.3. Pin Description

The following tables show the pin definition and description of EG91 series module.

Table 3: Definition of I/O Parameters

Type	Description
AI	Analog Input
AO	Analog Output
AIO	Analog Input/Output
DI	Digital Input
DO	Digital Output
DIO	Digital Input/Output
OD	Open Drain
PI	Power Input
PO	Power Output

Table 4: Pin Description

Power Supply					
Pin Name	**Pin No.**	**I/O**	**Description**	**DC Characteristics**	**Comment**
VBAT_BB	32, 33	PI	Power supply for the module's baseband part	Vmax = 4.3 V Vmin = 3.3 V Vnom = 3.8 V	It must be provided with sufficient current up to 0.8 A.
VBAT_RF	52, 53	PI	Power supply for the module's RF part	Vmax = 4.3 V Vmin = 3.3 V Vnom = 3.8 V	It must be provided with sufficient current up to 1.8 A in a burst transmission.
VDD_EXT	29	PO	Provide 1.8 V for external circuit	Vnom = 1.8 V $I_O$max = 50 mA	Power supply for external GPIO's pull up circuits. If unused, keep it open.
GND	3, 31, 48, 50, 54, 55, 58, 59, 61, 62, 67–74, 79–82, 89–91, 100–106				
Power-on/off					
Pin Name	**Pin No.**	**I/O**	**Description**	**DC Characteristics**	**Comment**
PWRKEY	15	DI	Turn on/off the module	V_{IH} = 0.8 V	The output voltage is 0.8 V because of the diode drop in the baseband chipset.
RESET_N	17	DI	Reset the module	V_{IH}max = 2.1 V V_{IH}min = 1.3 V V_{IL}max = 0.5 V	Require pull-up resistor to 1.8 V internally. Active low. If unused, keep it open.
Status Indication					
Pin Name	**Pin No.**	**I/O**	**Description**	**DC Characteristics**	**Comment**
STATUS	20	DO	Indicate the module's operation status	V_{OH}min = 1.35 V V_{OL}max = 0.45 V	1.8 V power domain. If unused, keep it open.
NETLIGHT	21	DO	Indicate the module's network activity status		
USB Interface					
Pin Name	**Pin No.**	**I/O**	**Description**	**DC Characteristics**	**Comment**

USB_VBUS	8	AI	USB connection detec	Vmax = 5.25 V Vmin = 3.0 V Vnom = 5.0 V	Typical value: 5.0 V If unused, keep it open.
USB_DP	9	AIO	USB differential data (+)		USB 2.0 compliant Require differential impedance of 90 Ω.
USB_DM	10	AIO	USB differential data (-)		
(U)SIM Interfaces					
Pin Name	**Pin No.**	**I/O**	**Description**	**DC Characteristics**	**Comment**
USIM_GND	47		Specified ground for (U)SIM card		Connect to ground of (U)SIM card connector.
USIM1_VDD	43	PO	(U)SIM1 card power supply	$I_O$max = 50 mA **For 1.8 V (U)SIM:** Vmax = 1.9 V Vmin = 1.7 V **For 3.0 V (U)SIM:** Vmax = 3.05 V Vmin = 2.7 V	Either 1.8 V or 3.0 V is supported by the module automatically.
USIM1_DATA	45	DIO	(U)SIM1 card data	**For 1.8 V (U)SIM:** V_{IL}max = 0.6 V V_{IH}min = 1.2 V V_{OL}max = 0.45 V V_{OH}min = 1.35 V **For 3.0 V (U)SIM:** V_{IL}max = 1.0 V V_{IH}min = 1.95 V V_{OL}max = 0.45 V V_{OH}min = 2.55 V	
USIM1_CLK	46	DO	(U)SIM1 card clock	**For 1.8 V (U)SIM:** V_{OL}max = 0.45 V V_{OH}min = 1.35 V **For 3.0 V (U)SIM:** V_{OL}max = 0.45 V V_{OH}min = 2.55 V	
USIM1_RST	44	DO	(U)SIM1 card reset		
USIM1_ PRESENCE	42	DI	(U)SIM1 card insertion detection	V_{IL}min = -0.3 V V_{IL}max = 0.6 V V_{IH}min = 1.2 V V_{IH}max = 2.0 V	1.8 V power domain. If unused, keep it open.

USIM2_VDD	87	PO	(U)SIM2 card power supply	**For 1.8 V (U)SIM:** Vmax = 1.9 V Vmin = 1.7 V **For 3.0 V (U)SIM:** Vmax = 3.05 V Vmin = 2.7 V $I_O$max = 50 mA	Either 1.8 V or 3.0 V is supported by the module automatically. If unused, keep it open.
USIM2_DATA	86	DIO	(U)SIM2 card data	**For 1.8 V (U)SIM:** V_{IL}max = 0.6 V V_{IH}min = 1.2 V V_{OL}max = 0.45 V V_{OH}min = 1.35 V **For 3.0 V (U)SIM:** V_{IL}max = 1.0 V V_{IH}min = 1.95 V V_{OL}max = 0.45 V V_{OH}min = 2.55 V	
USIM2_CLK	84	DO	(U)SIM2 card clock	**For 1.8 V (U)SIM:** V_{OL}max = 0.45 V V_{OH}min = 1.35 V **For 3.0 V (U)SIM:** V_{OL}max = 0.45 V V_{OH}min = 2.55 V	
USIM2_RST	85	DO	(U)SIM2 card reset	**For 1.8 V (U)SIM:** V_{OL}max = 0.45 V V_{OH}min = 1.35 V **For 3.0 V (U)SIM:** V_{OL}max = 0.45 V V_{OH}min = 2.55 V	
USIM2_ PRESENCE	83	DI	(U)SIM2 card insertion detection	V_{IL}min = -0.3 V V_{IL}max = 0.6 V V_{IH}min = 1.2 V V_{IH}max = 2.0 V	1.8 V power domain. If unused, keep it open.
Main UART Interface					
Pin Name	**Pin No.**	**I/O**	**Description**	**DC Characteristics**	**Comment**
RI	39	DO	Ring indication	V_{OL}max = 0.45 V	1.8 V power domain.

DCD	38	DO	Data carrier detect	V_{OH}min = 1.35 V	If unused, keep it open.
CTS	36	DO	Clear to send		
RTS	37	DI	Request to send	V_{IL}min = -0.3 V V_{IL}max = 0.6 V V_{IH}min = 1.2 V V_{IH}max = 2.0 V	1.8 V power domain. Pulled up by default. Low level wakes up the module. If unused, keep it open.
DTR	30	DI	Data terminal ready Sleep mode control		
TXD	35	DO	Transmit	V_{OL}max = 0.45 V V_{OH}min = 1.35 V	1.8 V power domain. If unused, keep it open.
RXD	34	DI	Receive	V_{IL}min = -0.3 V V_{IL}max = 0.6 V V_{IH}min = 1.2 V V_{IH}max = 2.0 V	
Debug UART Interface					
Pin Name	**Pin No.**	**I/O**	**Description**	**DC Characteristics**	**Comment**
DBG_TXD	23	DO	Debug UART transmit	V_{OL}max = 0.45 V V_{OH}min = 1.35 V	1.8 V power domain. If unused, keep it open.
DBG_RXD	22	DI	Debug UART receive	V_{IL}min = -0.3 V V_{IL}max = 0.6 V V_{IH}min = 1.2 V V_{IH}max = 2.0 V	
PCM Interface					
Pin Name	**Pin No.**	**I/O**	**Description**	**DC Characteristics**	**Comment**
PCM_DIN	6	DI	PCM data input	V_{IL}min = -0.3 V V_{IL}max = 0.6 V V_{IH}min = 1.2 V V_{IH}max = 2.0 V	1.8 V power domain. If unused, keep it open.
PCM_DOUT	7	DO	PCM data output	V_{OL}max = 0.45 V V_{OH}min = 1.35 V	
PCM_SYNC	5	DIO	PCM data frame sync	V_{OL}max = 0.45 V V_{OH}min = 1.35 V	1.8 V power domain. In master mode, it is an output signal. In slave mode, it is an input signal. If unused, keep it open.
PCM_CLK	4	DIO	PCM data clock	V_{IL}min = -0.3 V V_{IL}max = 0.6 V V_{IH}min = 1.2 V V_{IH}max = 2.0 V	
I2C Interface					

Pin Name	Pin No.	I/O	Description	DC Characteristics	Comment
I2C_SCL	40	OD	I2C serial clock (for external codec)		An external pull-up to 1.8 V is required. If unused, keep it open.
I2C_SDA	41	OD	I2C serial data (for external codec)		
ADC Interface					
Pin Name	**Pin No.**	**I/O**	**Description**	**DC Characteristics**	**Comment**
ADC0	24	AI	General-purpose ADC interface	Voltage range: 0.3 V to VBAT_BB	If unused, keep it open.
SPI Interface					
Pin Name	**Pin No.**	**I/O**	**Description**	**DC Characteristics**	**Comment**
SPI_CLK	26	DO	SPI clock	V_{OL}max = 0.45 V V_{OH}min = 1.35 V	1.8 V power domain. If unused, keep it open.
SPI_MOSI	27	DO	SPI master-out slave-in		
SPI_MISO	28	DI	SPI master-in slave-out	V_{IL}min = -0.3 V V_{IL}max = 0.6 V V_{IH}min = 1.2 V V_{IH}max = 2.0 V	
RF Interfaces					
Pin Name	**Pin No.**	**I/O**	**Description**	**DC Characteristics**	**Comment**
ANT_GNSS [9]	49	AI	GNSS antenna interface		50 Ω impedance. If unused, keep it open.
ANT_DIV [10]	56	AI	Diversity antenna interface		50 Ω impedance. If unused, keep it open.
ANT_MAIN	60	AIO	Main antenna Interface		50 Ω impedance.

[9] Pin 49 is defined as ANT_GNSS on EG91-AUX/-EX/-NA/-NAL/-NAX/-NAXD/-NAXDL/-VX, while it is defined as ANT_DIV on EG91-E.
[10] Pin 56 is RESERVED on EG91-E, while is defined as ANT_DIV on EG91-EX/-NA/-NAL/-NAX/-NAXD/-NAXDL/-VX. Rx-diversity antenna is not supported on EG91-AUX.

Other Pins					
Pin Name	**Pin No.**	**I/O**	**Description**	**DC Characteristics**	**Comment**
W_DISABLE#	18	DI	Airplane mode control	V_{IL}min = -0.3 V V_{IL}max = 0.6 V V_{IH}min = 1.2 V V_{IH}max = 2.0 V	1.8 V power domain. Pull-up by default. At low voltage level, module can enter airplane mode. If unused, keep it open.
AP_READY	19	DI	Application processor ready	V_{IL}min = -0.3 V V_{IL}max = 0.6 V V_{IH}min = 1.2 V V_{IH}max = 2.0 V	1.8 V power domain. If unused, keep it open.
USB_BOOT	75	DI	Force the module to enter emergency download mode	V_{IL}min = -0.3 V V_{IL}max = 0.6 V V_{IH}min = 1.2 V V_{IH}max = 2.0 V	1.8 V power domain. It is recommended to reserve the test points.
NC and RESERVED Pins					
Pin Name	**Pin No.**	**I/O**	**Description**	**DC Characteristics**	**Comment**
NC	1, 2, 11–14, 16, 51, 57, 63–66, 76–78, 88, 92–99				Keep these pins unconnected.
RESERVED	25, 56				Keep these pins unconnected. Pin 56 is only reserved on EG91-E.

NOTE

1. Keep all RESERVED pins and unused pins unconnected.
2. BOOT_CONFIG pins (SPI_CLK, USB_BOOT, PCM_CLK, PCM_SYNC) cannot be pulled up before startup.

3.4. Operating Modes

The table below briefly outlines the operating modes to be mentioned in the following chapters.

Table 5: Overview of Operating Modes

Mode	Details	
Normal Operation	Idle	Software is active. The module has registered on network, and it is ready to send and receive data.
	Talk/Data	Network is connected. In this mode, the power consumption is decided by network setting and data transfer rate.
Airplane Mode	**AT+CFUN=4** or W_DISABLE# pin can set the module to enter airplane mode. In this case, RF function will be invalid.	
Minimum Functionality Mode	**AT+CFUN=0** can set the module to a minimum functionality mode without removing the power supply. In this case, both RF function and (U)SIM card will be invalid.	
Sleep Mode	In this mode, the current consumption of the module will be reduced to the minimal level. During this mode, the module can still receive paging message, SMS, voice call and TCP/UDP data from the network normally.	
Power Down Mode	In this mode, the power management unit shuts down the power supply. Software is goes inactive. The serial interface is not accessible. Operating voltage (connected to VBAT_RF and VBAT_BB) remains applied.	

For details of the above AT command, see ***document [3]***.

3.5. Power Saving

3.5.1. Sleep Mode

EG91 series module is able to reduce its current consumption to a minimum value during the sleep mode. The following sub-chapters describe the power saving procedures of EG91 series module.

3.5.1.1. UART Application

If the host communicates with the module via UART interface, the following preconditions can let the module enter sleep mode.

- Execute **AT+QSCLK=1** to enable sleep mode.
- Drive DTR to high level.

The following figure shows the connection between the module and the host.

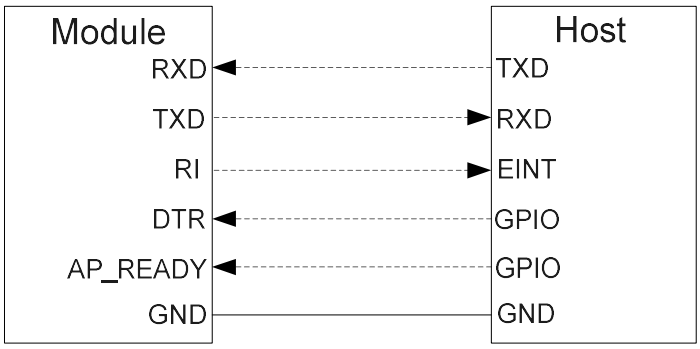

Figure 3: Sleep Mode Application via UART

Driving the host DTR to low level will wake up the module.

- When EG91 series module has a URC to report, RI signal will wake up the host. See ***Chapter 3.17*** for details about RI behavior.
- AP_READY will detect the sleep state of host (can be configured to high level or low level detection). See **AT+QCFG="apready"** for details.

3.5.1.2. USB Application with USB Remote Wakeup Function

If the host supports USB suspend/resume and remote wakeup functions, the following three preconditions must be met to let the module enter sleep mode.

- Execute **AT+QSCLK=1** to enable sleep mode.
- Ensure the DTR is held at high level or keep it open.
- The host's USB bus, which is connected with the module's USB interface, enters suspend state.

The following figure shows the connection between the module and the host.

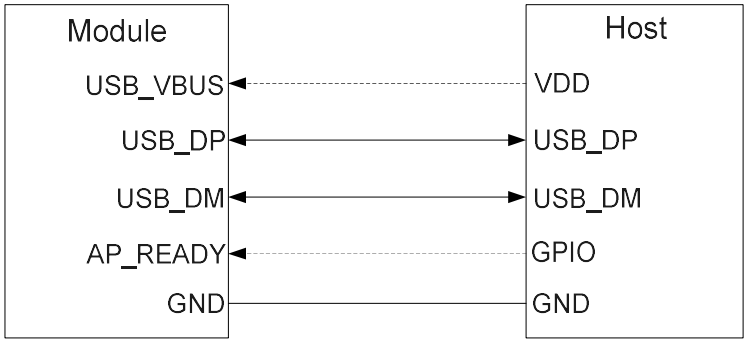

Figure 4: Sleep Mode Application with USB Remote Wakeup

- Sending data to EG91 series module through USB will wake up the module.
- When EG91 series module has a URC to report, the module will send remote wakeup signals via USB bus to wake up the host.

3.5.1.3. USB Application with USB Suspend/Resume and RI Function

If the host supports USB suspend/resume, but does not support remote wakeup function, the RI signal is needed to wake up the host.

There are three preconditions to let the module enter sleep mode.

- Execute **AT+QSCLK=1** to enable sleep mode.
- Ensure the DTR is held at high level or keep it open.
- The host's USB bus, which is connected with the module's USB interface, enters suspended state.

The following figure shows the connection between the module and the host.

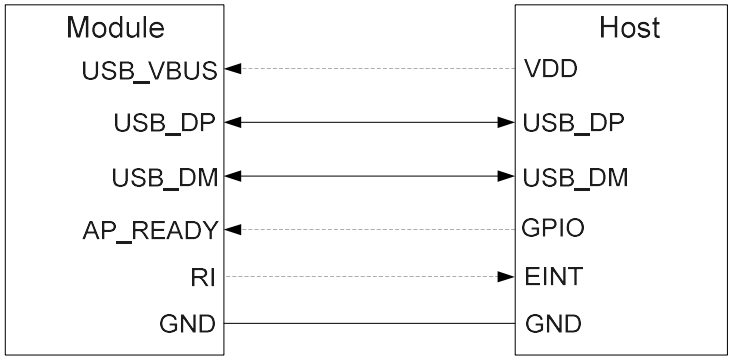

Figure 5: Sleep Mode Application with RI

- Sending data to EG91 series module through USB will wake up the module.
- When module has a URC to report, RI signal will wake up the host.

3.5.1.4. USB Application without USB Suspend Function

If the host does not support USB suspend function, USB_VBUS should be disconnected with an external control circuit to let the module enter sleep mode.

- Execute **AT+QSCLK=1** to enable sleep mode.
- Ensure the DTR is held at high level or keep it open.
- Disconnect USB_VBUS.

The following figure shows the connection between the module and the host.

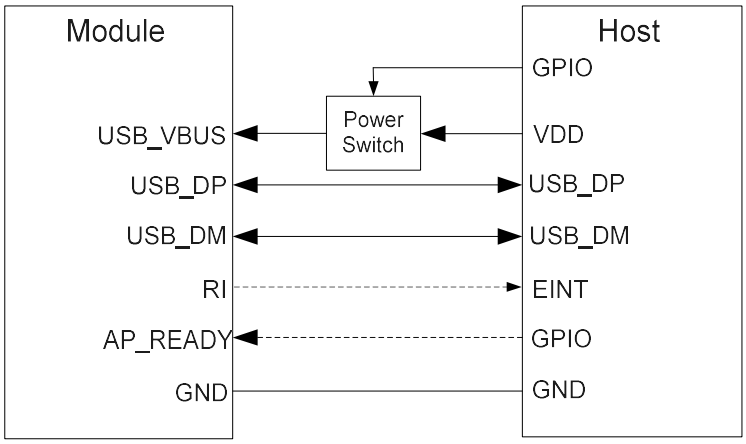

Figure 6: Sleep Mode Application without Suspend Function

Switching on the power switch to supply power to USB_VBUS will wake up the module.

NOTE

1. Pay attention to the level match shown in dotted line between the module and the host. Refer to ***document [2]*** for more details about EG91 series module power management application.
2. For details of **AT+QSCLK**, see ***document [3]***.
3. For details of **AT+QCFG**, see ***document [5]*** .

3.5.2. Airplane Mode

When the module enters airplane mode, the RF function will be disabled, and all AT commands related to it will be inaccessible. This mode can be set via the following ways.

Hardware:

The W_DISABLE# pin is pulled up by default. Driving it to low level will let the module enter airplane mode.

Software:

AT+CFUN=<fun> provides the choice of the functionality level through setting **<fun>** as 0, 1 or 4.

- **AT+CFUN=0:** Minimum functionality mode. Both (U)SIM and RF functions are disabled.
- **AT+CFUN=1:** Full functionality mode (by default).
- **AT+CFUN=4:** Airplane mode. RF function is disabled.

NOTE

1. Airplane mode control via W_DISABLE# is disabled in firmware by default. It can be enabled by **AT+QCFG="airplanecontrol"**.
2. The execution of **AT+CFUN** will not affect GNSS function.

3.6. Power Supply

3.6.1. Power Supply Pins

EG91 series module provides four VBAT pins for connection with an external power supply. There are two separate voltage domains for VBAT.

- Two VBAT_RF pins for module's RF part.
- Two VBAT_BB pins for module's baseband part.

The following table shows the details of VBAT pins and ground pins.

Table 6: Pin Definition of VBAT and GND

Pin Name	Pin No.	Description	Min.	Typ.	Max.	Unit
VBAT_RF	52, 53	Power supply for the module's RF part.	3.3	3.8	4.3	V
VBAT_BB	32, 33	Power supply for the module's baseband part.	3.3	3.8	4.3	V
GND	3, 31, 48, 50, 54, 55, 58, 59, 61, 62, 67–74, 79–82, 89–91, 100–106		-	0	-	V

3.6.2. Decrease Voltage Drop

The power supply range of the module is from 3.3 V to 4.3 V. Please make sure that the input voltage will never drop below 3.3 V. The following figure shows the voltage drop during burst transmission in 2G network. The voltage drop will be less in 3G and 4G networks.

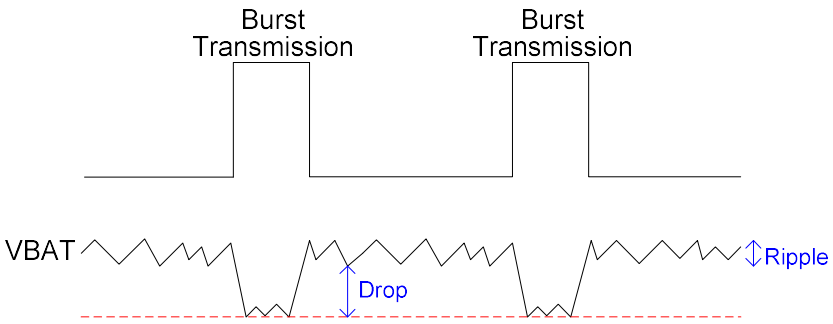

Figure 7: Power Supply Limits during Burst Transmission

To decrease voltage drop, a bypass capacitor of about 100 μF with low ESR (ESR = 0.7 Ω) should be used, and a multi-layer ceramic chip (MLCC) capacitor array should also be reserved due to its ultra-low ESR. It is recommended to use three ceramic capacitors (100 nF, 33 pF, 10 pF) for composing the MLCC array, and place these capacitors close to VBAT_BB/VBAT_RF pins. The main power supply from an external application has to be a single voltage source and can be expanded to two sub paths with star structure. The width of VBAT_BB trace should be no less than 1 mm, and the width of VBAT_RF trace should be no less than 2 mm. In principle, the longer the VBAT trace is, the wider it will be.

In addition, in order to avoid the damage caused by electric surge and ESD, it is suggested that a TVS diode with low reverse stand-off voltage V_{RWM} (4.5 V), low clamping voltage V_C and high reverse peak pulse current I_{PP} should be used. The following figure shows the star structure of the power supply.

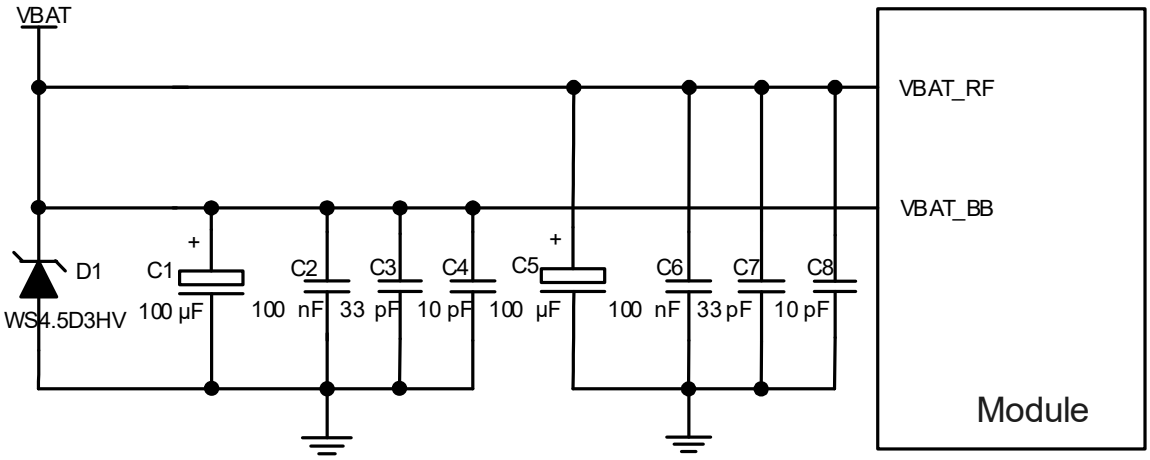

Figure 8: Star Structure of Power Supply

3.6.3. Reference Design for Power Supply

Power design for the module is very important, as the performance of the module largely depends on the power source. The power supply should be able to provide sufficient current up to 2 A at least. If the voltage drop between the input and output is not too high, it is suggested that an LDO should be used to supply power for the module. If there is a big voltage difference between the input source and the desired output (VBAT), a buck converter is preferred to be used as the power supply.

The following figure shows a reference design for +5 V input power source. The typical output of the power supply is about 3.8 V and the maximum load current is 3 A.

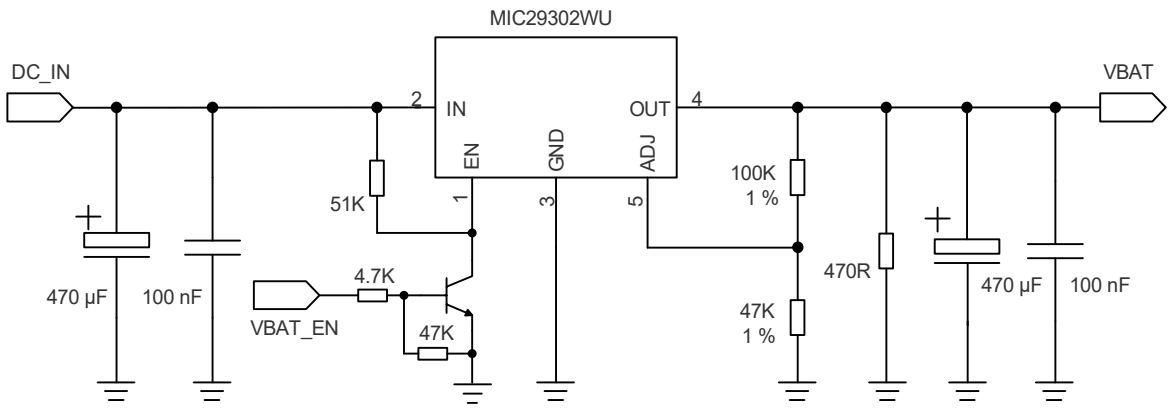

Figure 9: Reference Circuit of Power Supply

NOTE

To avoid damaging internal flash, do not switch off the power supply when the module works normally. Only after the module is shut down by PWRKEY or AT command, then the power supply can be cut off.

3.6.4. Monitor the Power Supply

AT+CBC can be used to monitor the VBAT_BB voltage value. For more details, refer to ***document [3]***.

3.7. Power-on/off Scenarios

3.7.1. Turn on Module Using the PWRKEY

The following table shows the pin definition of PWRKEY.

Table 7: Pin Definition of PWRKEY

Pin Name	Pin No.	Description	Comment
PWRKEY	15	Turn on/off the module	The output voltage is 0.8 V because of the diode drop in the baseband chipset.

When EG91 series module is in power down mode, it can be turned on to normal mode by driving the PWRKEY pin to a low level for at least 500 ms. It is recommended to use an open drain/collector driver to control the PWRKEY. After STATUS pin outputting a high level, PWRKEY pin can be released. A simple reference circuit is illustrated in the following figure.

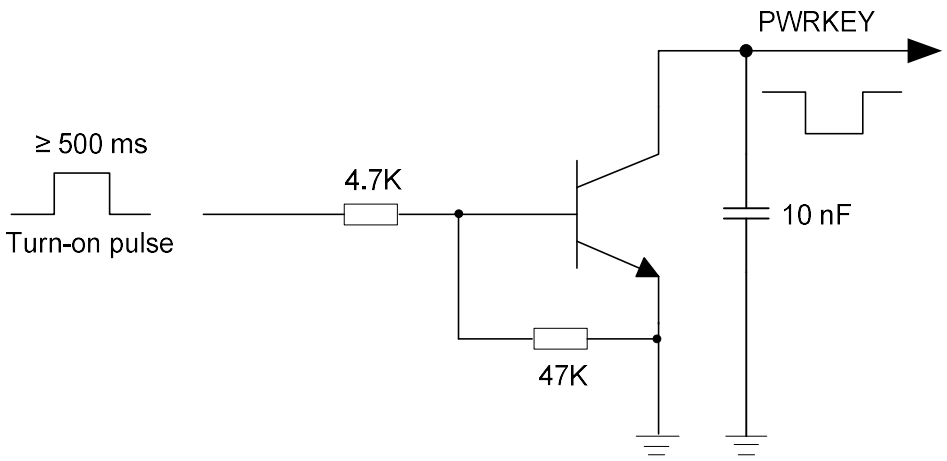

Figure 10: Turn on the Module Using Driving Circuit

Another way to control the PWRKEY is using a button directly. When pressing the key, electrostatic strike may generate from the finger. Therefore, a TVS component is indispensable to be placed nearby the button for ESD protection. A reference circuit is shown in the following figure.

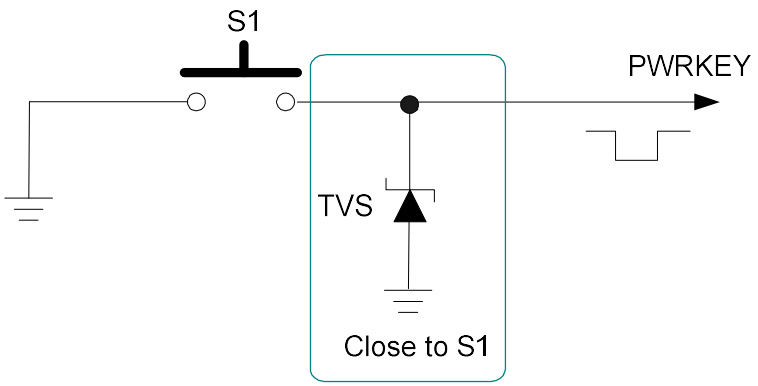

Figure 11: Turn on the Module Using A Button

The power-up scenario is illustrated in the following figure.

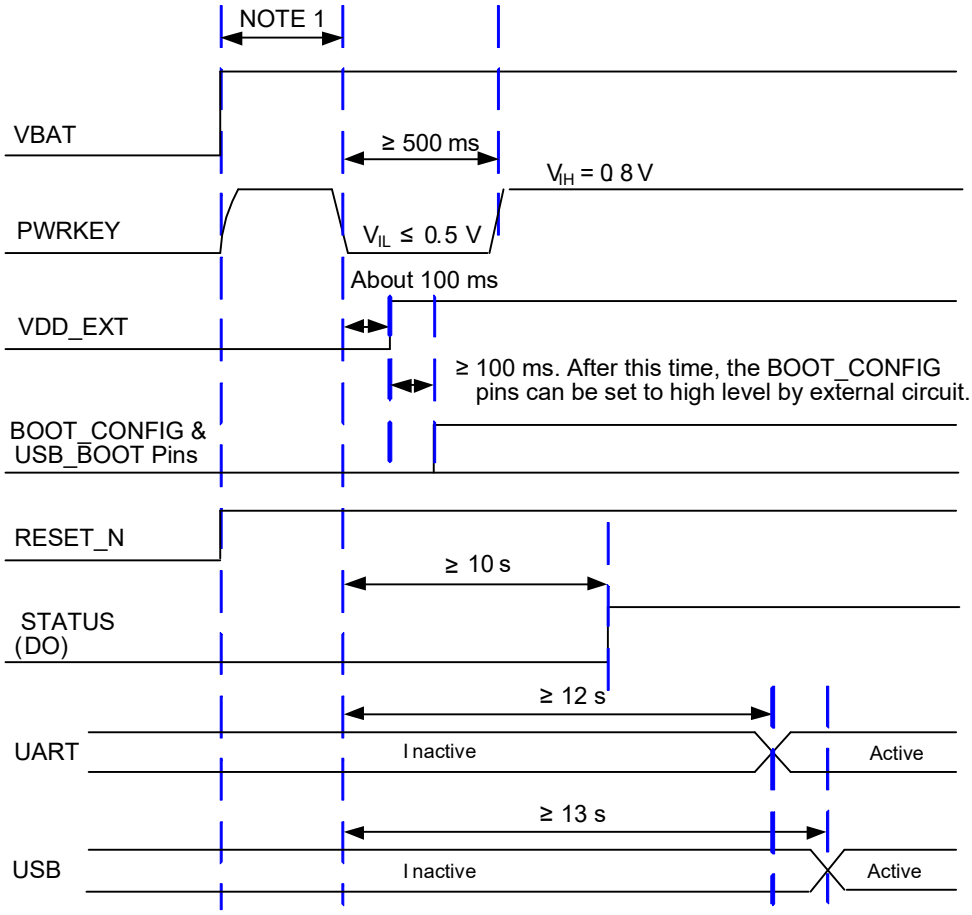

Figure 12: Power-up Timing

NOTE

1. Make sure that VBAT is stable before pulling down PWRKEY pin. The time between them is no less than 30 ms.
2. PWRKEY can be pulled down directly to GND with a recommended 10 kΩ resistor if the module needs to be powered on automatically and shutdown is not needed.
3. BOOT_CONFIG pins (SPI_CLK, USB_BOOT, PCM_CLK, PCM_SYNC) cannot be pulled up before startup.

3.7.2. Turn off Module

Either of the following methods can be used to turn off the module normally:

- Use the PWRKEY pin.
- Use **AT+QPOWD**.

3.7.2.1. Turn off Module Using the PWRKEY Pin

Driving the PWRKEY pin to a low level voltage for at least 650 ms, the module will execute power-off procedure after the PWRKEY is released. The power-down scenario is illustrated in the following figure.

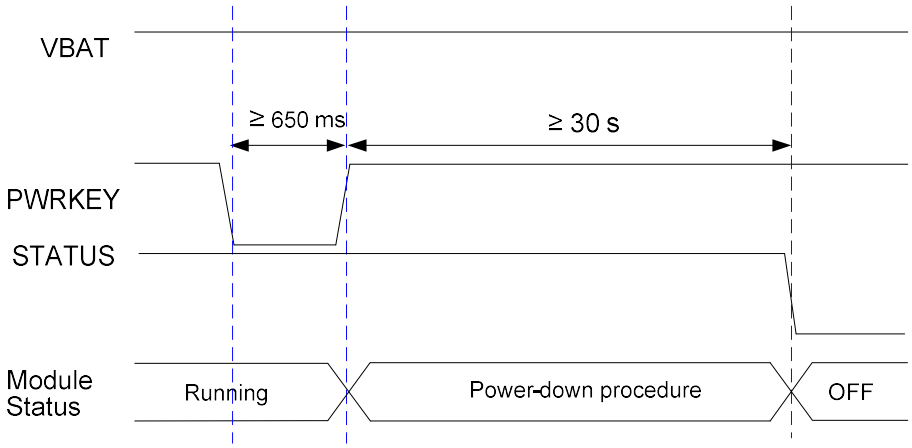

Figure 13: Power-down Timing

3.7.2.2. Turn off Module Using AT Command

It is also a safe way to use **AT+QPOWD** to turn off the module, which is similar to turning off the module via PWRKEY pin.

See ***document [3]*** for details about the **AT+QPOWD**.

NOTE

1. To avoid damaging internal flash, do not switch off the power supply when the module works normally. Only after the module is shut down by PWRKEY or AT command, the power supply can be cut off.
2. When turning off module with the AT command, keep PWRKEY at high level after the execution of the command. Otherwise, the module will be turned on again after being shut down.

3.8. Reset the Module

The RESET_N pin can be used to reset the module. The module can be reset by driving RESET_N to a low level voltage for 150–460 ms.

Table 8: Pin Definition of RESET_N

Pin Name	Pin No.	Description	Comment
RESET_N	17	Reset the module	Require pull-up resistor to 1.8 V internally. Active low. If unused, keep it open.

The recommended circuit is similar to the PWRKEY control circuit. An open drain/collector driver or button can be used to control the RESET_N.

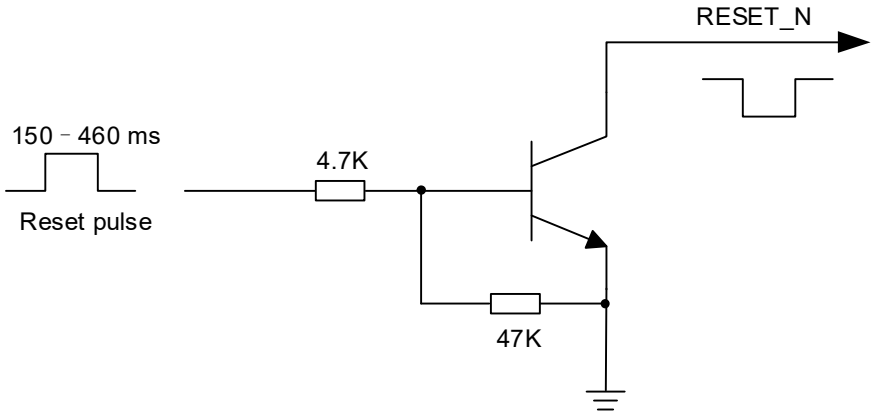

Figure 14: Reference Circuit of RESET_N by Using Driving Circuit

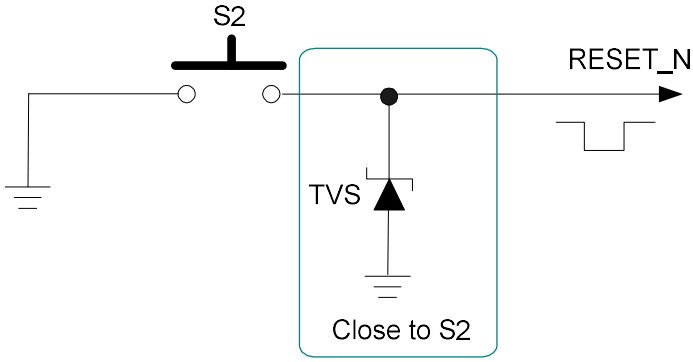

Figure 15: Reference Circuit of RESET_N by Using A Button

The reset scenario is illustrated in the following figure.

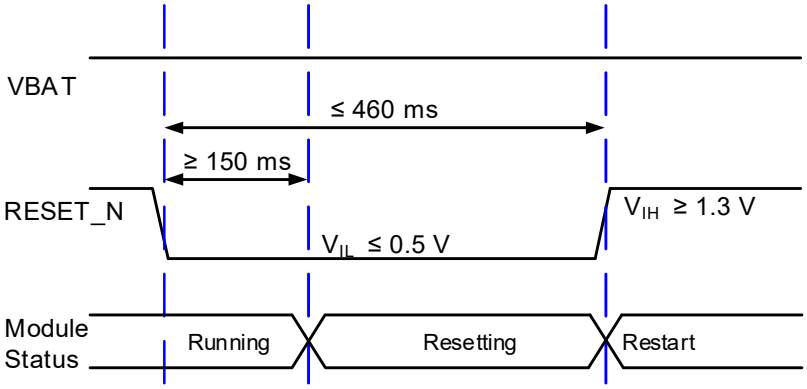

Figure 16: Timing of Resetting the Module

NOTE

1. Use RESET_N only when turning off the module by **AT+QPOWD** and PWRKEY pin are failed.
2. Ensure that there is no large capacitance on PWRKEY and RESET_N pins.

3.9. (U)SIM Interfaces

EG91 series module provides two (U)SIM interfaces, and only one (U)SIM card can work at a time. The (U)SIM1 and (U)SIM2 cards can be switched by **AT+QDSIM**. For more details, refer to ***document [3]***.

The (U)SIM interfaces circuitry meet ETSI and IMT-2000 requirements. Both 1.8 V and 3.0 V (U)SIM cards are supported.

Table 9: Pin Definition of (U)SIM Interfaces

Pin Name	Pin No.	I/O	Description	Comment
USIM_GND	47		Specified ground for (U)SIM card	Connect to ground of (U)SIM card connector.
USIM1_VDD	43	PO	(U)SIM1 card power supply	Either 1.8 V or 3.0 V is supported by the module automatically.
USIM1_DATA	45	DIO	(U)SIM1 card data	
USIM1_CLK	46	DO	(U)SIM1 card clock	

USIM1_RST	44	DO	(U)SIM1 card reset	
USIM1_ PRESENCE	42	DI	(U)SIM1 card insertion detection	1.8 V power domain. If unused, keep it open.
USIM2_VDD	87	PO	(U)SIM2 card power supply	Either 1.8 V or 3.0 V is supported by the module automatically. If unused, keep it open.
USIM2_DATA	86	DIO	(U)SIM2 card data	
USIM2_CLK	84	DO	(U)SIM2 card clock	
USIM2_RST	85	DO	(U)SIM2 card reset	
USIM2_ PRESENCE	83	DI	(U)SIM2 card insertion detection	1.8 V power domain. If unused, keep it open.

EG91 series module supports (U)SIM card hot-plug via USIM_PRESENCE (USIM1_PRESENCE/USIM2 _PRESENCE) pin, and both high and low level detection are supported. The function is disabled by default, and see **AT+QSIMDET** in ***document [3]*** for more details.

The following figure shows a reference design for (U)SIM interface with an 8-pin (U)SIM card connector.

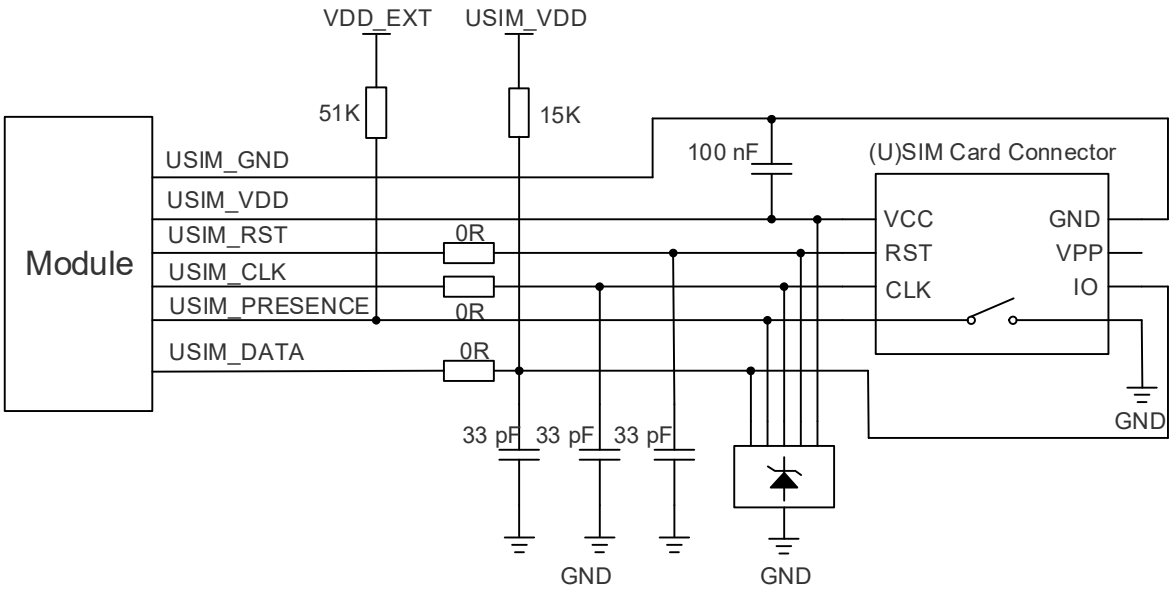

Figure 17: Reference Circuit of (U)SIM Interface with an 8-pin (U)SIM Card Connector

If (U)SIM card detection function is not needed, keep USIM_PRESENCE unconnected. A reference circuit of (U)SIM interface with a 6-pin (U)SIM card connector is illustrated in the following figure.

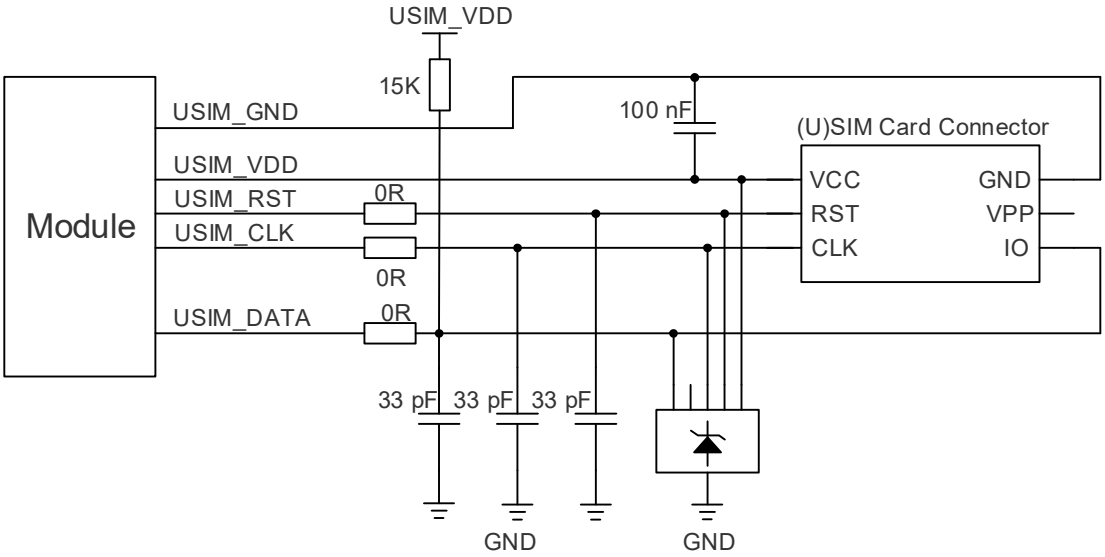

Figure 18: Reference Circuit of (U)SIM Interface with a 6-pin (U)SIM Card Connector

To enhance the reliability and availability of the (U)SIM cards in your applications, please follow the criteria below in the (U)SIM circuit design:

- Keep placement of (U)SIM card connector to the module as close as possible. Keep the trace length as less than 200 mm as possible.
- Keep (U)SIM card signals away from RF and VBAT traces.
- Make sure the bypass capacitor between USIM_VDD and USIM_GND less than 1 μF, and place it as close to (U)SIM card connector as possible. If the ground is complete on your PCB, USIM_GND can be connected to PCB ground directly.
- To avoid cross-talk between USIM_DATA and USIM_CLK, keep them away from each other and shield them with surrounded ground.
- To offer good ESD protection, it is recommended to add a TVS diode array whose parasitic capacitance should not be more than 15 pF. The 0 Ω resistors should be added in series between the module and the (U)SIM card to facilitate debugging. The 33 pF capacitors are used for filtering interference of EGSM900. Please note that the (U)SIM peripheral circuit should be close to the (U)SIM card connector.
- The pull-up resistor on USIM_DATA trace can improve anti-jamming capability when long layout trace and sensitive occasion are applied, and should be placed close to the (U)SIM card connector.

3.10. USB Interface

EG91 series module contains one integrated Universal Serial Bus (USB) interface which complies with the USB 2.0 specification and supports high-speed (480 Mbps) and full-speed (12 Mbps) modes.

The USB interface acts as slave only, and is used for AT command communication, data transmission, GNSS NMEA sentences output, software debugging, firmware upgrade and voice over USB.

The following table shows the pin definition of USB interface.

Table 10: Pin Definition of USB Interface

Pin Name	Pin No.	I/O	Description	Comment
USB_DP	9	AIO	USB differential data (+)	USB 2.0 compliant Require differential impedance of 90 Ω.
USB_DM	10	AIO	USB differential data (-)	
USB_VBUS	8	AI	USB connection detect	Typical: 5.0 V
GND	3		Ground	

For more details about USB 2.0 specifications, visit http://www.usb.org/home.

The USB interface is recommended to be reserved for firmware upgrade in your design. The following figure shows a reference circuit of USB interface.

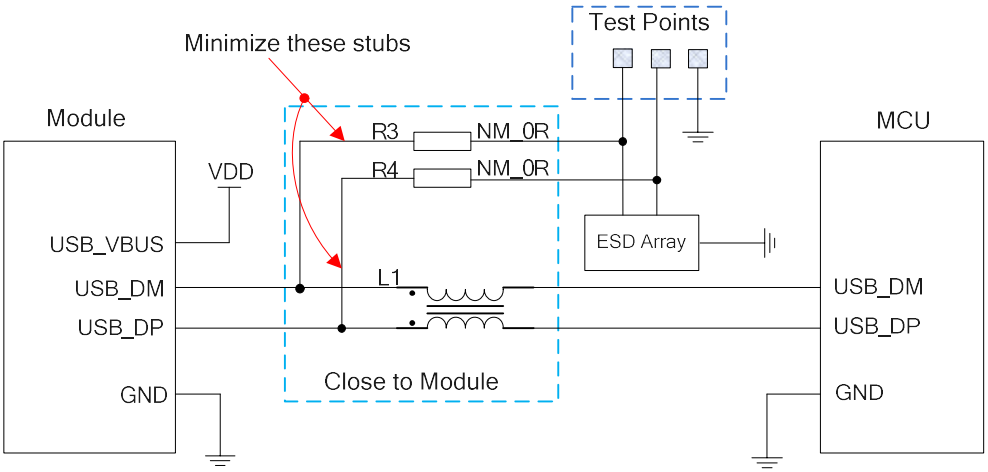

Figure 19: Reference Circuit of USB Interface

A common mode choke L1 is recommended to be added in series between the module and your MCU to suppress EMI spurious transmission. Meanwhile, the 0 Ω resistors (R3 and R4) should be added in series between the module and the test points to facilitate debugging, and the resistors are not mounted by default. To ensure the integrity of USB data trace signal, L1 & R3 & R4 components must be placed close to the module, and also these resistors should be placed close to each other. The extra stubs of trace must be as short as possible.

To meet USB 2.0 specification, the following principles should be complied with when design the USB interface.

- It is important to route the USB signal traces as differential pairs with ground surrounded. The impedance of USB differential trace is 90 Ω.
- Do not route signal traces under crystals, oscillators, magnetic devices and RF signal traces. It is important to route the USB differential traces in inner-layer of the PCB, and surround the traces with ground on that layer and with ground planes above and below.
- Junction capacitance of the ESD protection device might cause influences on USB data lines, so pay attention to the selection of the device. Typically, the stray capacitance should be less than 2 pF.
- Keep the ESD protection devices as close to the USB connector as possible.

3.11. UART Interfaces

The module provides two UART interfaces: the main UART interface and the debug UART interface. The following shows their features.

- The main UART interface supports 9600 bps, 19200 bps, 38400 bps, 57600 bps, 115200 bps, 230400 bps, 460800 bps and 921600 bps baud rates, and the default is 115200 bps. It supports RTS and CTS hardware flow control, and is used for AT command communication and data transmission.
- The debug UART interface supports 115200 bps baud rate. It is used for Linux console and log output.

The following tables show the pin definition of the two UART interfaces.

Table 11: Pin Definition of Main UART Interfaces

Pin Name	Pin No.	I/O	Description	Comment
RI	39	DO	Ring indication	1.8 V power domain If unused, keep it open.
DCD	38	DO	Data carrier detect	
CTS	36	DO	Clear to send	

RTS	37	DI	Request to send
DTR	30	DI	Data terminal ready Sleep mode control
TXD	35	DO	Transmit
RXD	34	DI	Receive

Table 12: Pin Definition of Debug UART Interface

Pin Name	Pin No.	I/O	Description	Comment
DBG_TXD	23	DO	Debug UART transmit	1.8 V power domain. If unused, keep it open.
DBG_RXD	22	DI	Debug UART receive	

The module provides 1.8 V UART interfaces. A voltage-level translator should be used if your application is equipped with a 3.3 V UART interface. A voltage-level translator TXS0108EPWR provided by *Texas Instruments* is recommended. The following figure shows a reference design.

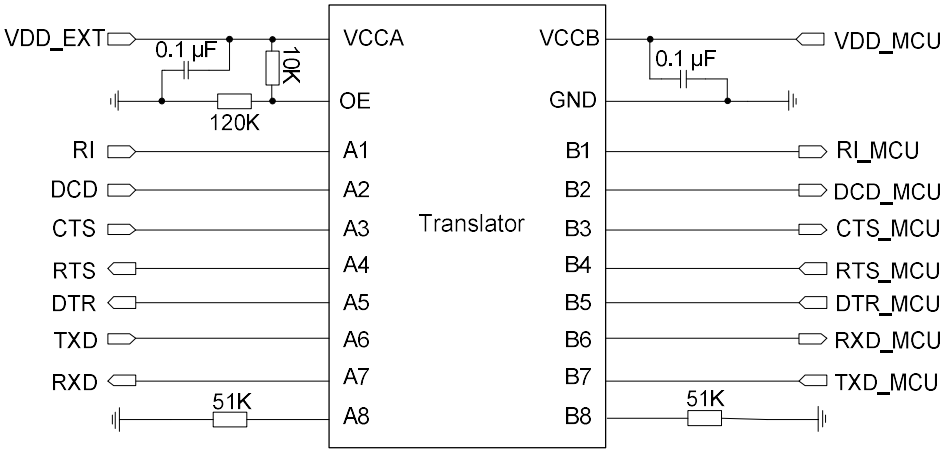

Figure 20: Reference Circuit with Translator Chip

Visit http://www.ti.com for more information.

Another example with transistor translation circuit is shown as below. For the design of circuits shown in dotted lines, see that shown in solid lines, but please pay attention to the direction of connection.

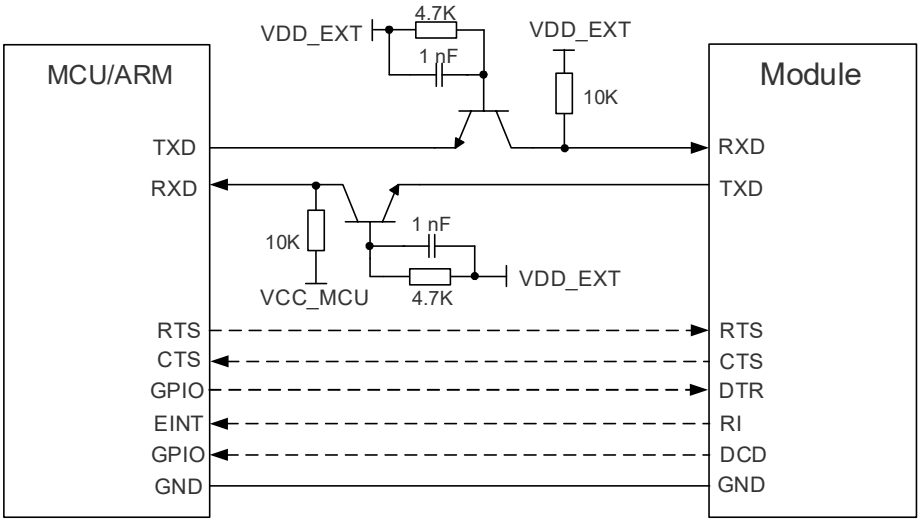

Figure 21: Reference Circuit with Transistor Circuit

NOTE

1. Transistor circuit solution is not suitable for applications with high baud rates exceeding 460 kbps.
2. Please note that the CTS and RTS pins of the hardware flow control for the UART port are directly connected, and pay attention to the input and output directions.

3.12. PCM and I2C Interfaces

EG91 series module provides one Pulse Code Modulation (PCM) digital interface for audio design, which supports the following modes and one I2C interface:

- Primary mode (short frame synchronization, works as both master and slave)
- Auxiliary mode (long frame synchronization, works as master only)

In primary mode, the data is sampled on the falling edge of the PCM_CLK and transmitted on the rising edge. The PCM_SYNC falling edge represents the MSB. In this mode, the PCM interface supports 256 kHz, 512 kHz, 1024 kHz or 2048 kHz PCM_CLK at 8 kHz PCM_SYNC, and also supports 4096 kHz PCM_CLK at 16 kHz PCM_SYNC.

In auxiliary mode, the data is also sampled on the falling edge of the PCM_CLK and transmitted on the rising edge. The PCM_SYNC rising edge represents the MSB. In this mode, the PCM interface operates with a 256 kHz, 512 kHz, 1024 kHz or 2048 kHz PCM_CLK and an 8 kHz, 50 % duty cycle PCM_SYNC.

EG91 series module supports 16-bit linear data format. The following figures show the primary mode's timing relationship with 8 kHz PCM_SYNC and 2048 kHz PCM_CLK, as well as the auxiliary mode's timing relationship with 8 kHz PCM_SYNC and 256 kHz PCM_CLK.

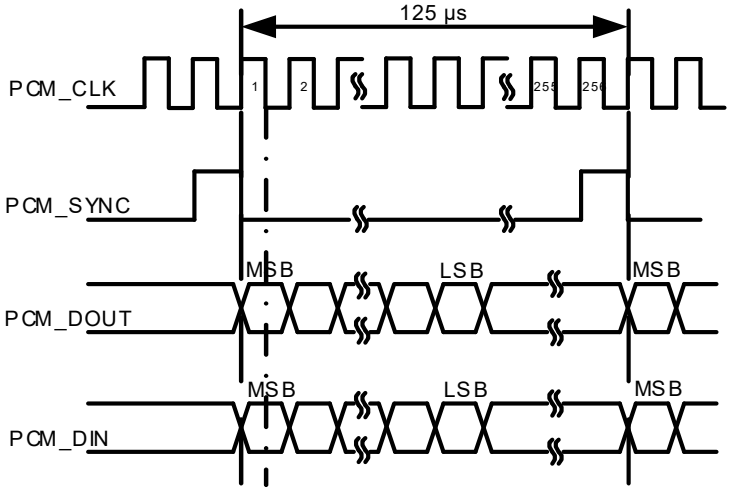

Figure 22: Primary Mode Timing

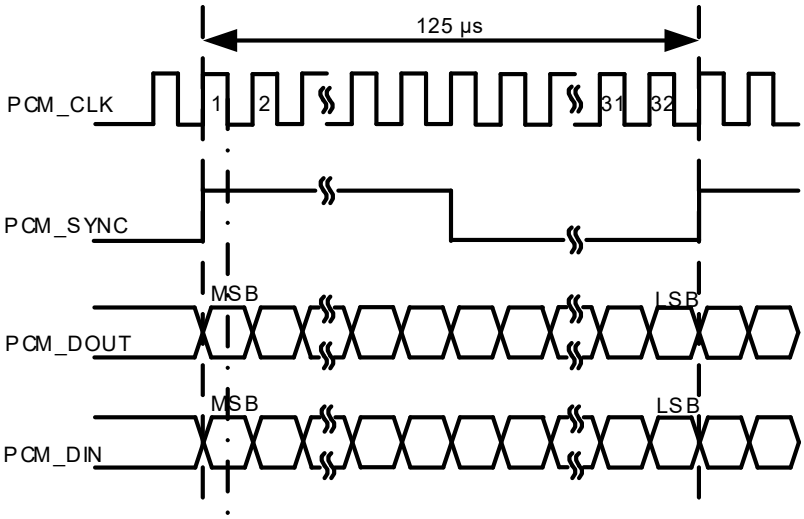

Figure 23: Auxiliary Mode Timing

The following table shows the pin definition of PCM and I2C interfaces which can be applied on audio codec design.

Table 13: Pin Definition of PCM and I2C Interfaces

Pin Name	Pin No.	I/O	Description	Comment
PCM_DIN	6	DI	PCM data input	1.8 V power domain. If unused, keep it open.
PCM_DOUT	7	DO	PCM data output	
PCM_SYNC	5	DIO	PCM data frame sync	1.8 V power domain. In master mode, it is an output signal. In slave mode, it is an input signal. If unused, keep it open.
PCM_CLK	4	DIO	PCM data clock	
I2C_SCL	40	OD	I2C serial clock (for external codec)	Require an external pull-up to 1.8 V If unused, keep it open.
I2C_SDA	41	OD	I2C serial data (for external codec)	

Clock and mode can be configured by AT command, and the default configuration is master mode using short frame synchronization format with 2048 kHz PCM_CLK and 8 kHz PCM_SYNC. See ***document [3]*** about **AT+QDAI** for details.

The following figure shows a reference design of PCM interface with external codec IC.

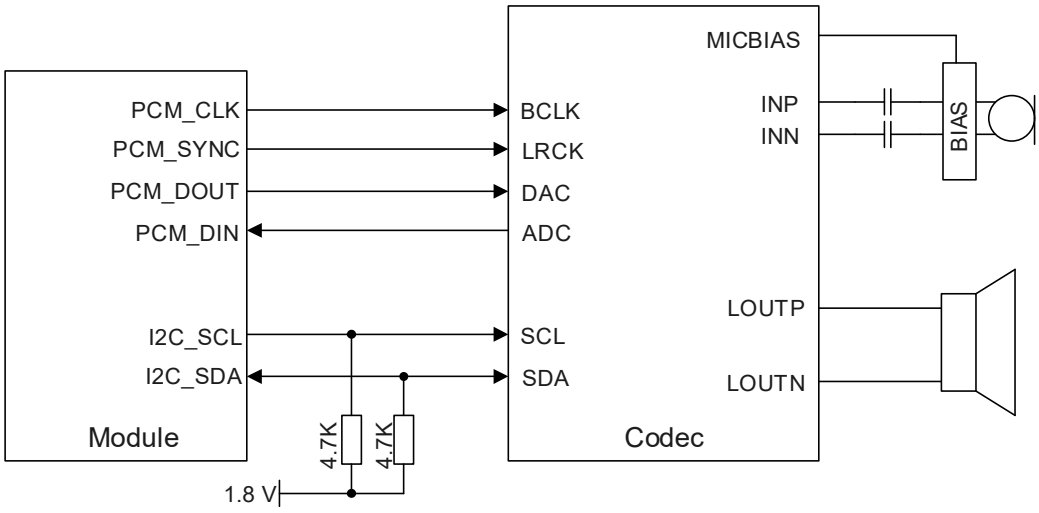

Figure 24: Reference Circuit of PCM Application with Audio Codec

NOTE

1. It is recommended to reserve an RC (R = 22 Ω, C = 22 pF) circuit on the PCM traces, especially for PCM_CLK.
2. EG91 series works as a master device pertaining to I2C interface.

3.13. SPI Interface

SPI interface of EG91 series module works as the master only. It provides a duplex, synchronous and serial communication link with the peripheral devices. It is dedicated to one-to-one connection, without chip selection. Its operation voltage is 1.8 V with clock rates up to 50 MHz.

The following table shows the pin definition of SPI interface.

Table 14: Pin Definition of SPI Interface

Pin Name	Pin No.	I/O	Description	Comment
SPI_CLK	26	DO	SPI clock	1.8 V power domain. If unused, keep it open.
SPI_MOSI	27	DO	SPI master-out slave-in	
SPI_MISO	28	DI	SPI master-in slave-out	

The following figure shows a reference design of SPI interface with peripherals.

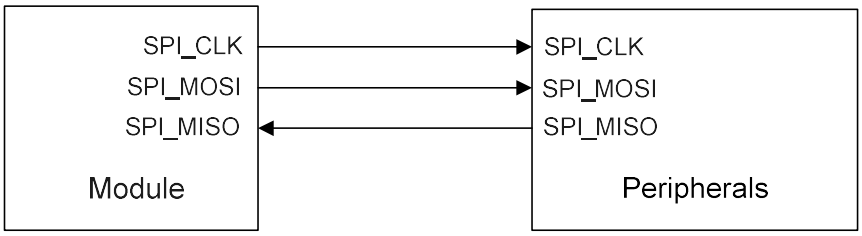

Figure 25: Reference Circuit of SPI Interface with Peripherals

NOTE

EG91 series provides 1.8 V SPI interface. A voltage-level translator should be used between the module and the host if your application is equipped with a 3.3 V processor or device interface.

3.14. Network Status Indication

The module provides one network indication pin: NETLIGHT. The pin is used to drive a network status indication LED.

The following tables describe the pin definition and logic level changes of NETLIGHT in different network status.

Table 15: Pin Definition of Network Status Indicator

Pin Name	Pin No.	I/O	Description	Comment
NETLIGHT	21	DO	Indicate the module's network activity status	1.8 V power domain

Table 16: Working State of Network Status Indicator

Pin Name	Logic Level Changes	Network Status
NETLIGHT	Flicker slowly (200 ms High/1800 ms Low)	Network searching
	Flicker slowly (1800 ms High/200 ms Low)	Idle
	Flicker quickly (125 ms High/125 ms Low)	Data transfer is ongoing
	Always High	Voice calling

A reference circuit is shown in the following figure.

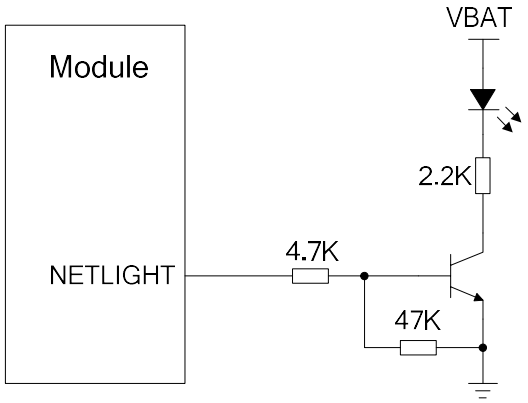

Figure 26: Reference Circuit of Network Status Indication

3.15. STATUS

The STATUS pin is set as the module's operation status indicator. It will output high level when the module is powered on. The following table describes the pin definition of STATUS.

Table 17: Pin Definition of STATUS

Pin Name	Pin No.	I/O	Description	Comment
STATUS	20	DO	Indicate the module's operation status	1.8 V power domain. If unused, keep it open.

The following figure shows the reference circuit of STATUS.

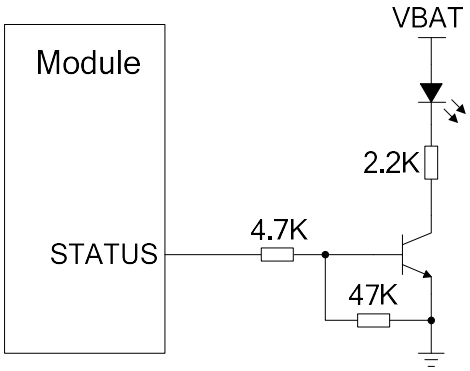

Figure 27: Reference Circuit of STATUS

3.16. ADC Interface

The module provides one analog-to-digital converter (ADC) interface. **AT+QADC=0** can be used to read the voltage value on ADC0 pin. For more details about the command, see ***document [3]***.

To improve the accuracy of ADC voltage values, the traces of ADC should be surrounded by ground.

Table 18: Pin Definition of ADC Interface

Pin Name	Pin No.	I/O	Description	Comment
ADC0	24	AI	General-purpose ADC interface	If unused, keep this pin open.

The following table describes the characteristics of ADC interface.

Table 19: Characteristics of ADC Interface

Parameter	Min.	Typ.	Max.	Unit
ADC0 Voltage Range	0.3		VBAT_BB	V
ADC Resolution			15	bits

NOTE

1. It is prohibited to supply any voltage to ADC pins when ADC pins are not powered by VBAT.
2. It is recommended to use resistor divider circuit for ADC application.

3.17. Behaviors of RI

AT+QCFG="risignaltype","physical" can be used to configure RI behavior. See ***document [3]*** for details.

No matter on which port URC is presented, URC will trigger the behavior of RI pin.

NOTE

URC can be outputted from UART port, USB AT port and USB modem port through configuration via **AT+QURCCFG**. The default port is USB AT port.

The default behaviors of the RI are shown as below, and can be changed by **AT+QCFG="urc/ri/ring"**. See ***document [3]*** for details.

Table 20: Default Behaviors of RI

State	Response
Idle	RI keeps at high level
URC	RI outputs 120 ms low pulse when a new URC returns

3.18. USB_BOOT Interface

EG91 series module provides a USB_BOOT pin. You can pull up USB_BOOT to VDD_EXT before VDD_EXT is powered up, and the module will enter emergency download mode when it is powered on. In this mode, the module supports firmware upgrade over USB interface.

Table 21: Pin Definition of USB_BOOT Interface

Pin Name	Pin No.	I/O	Description	Comment
USB_BOOT	75	DI	Force the module to enter emergency download mode	1.8 V power domain. Active high. It is recommended to reserve test point.

The following figures show the reference circuit of USB_BOOT interface and timing sequence of entering emergency download mode.

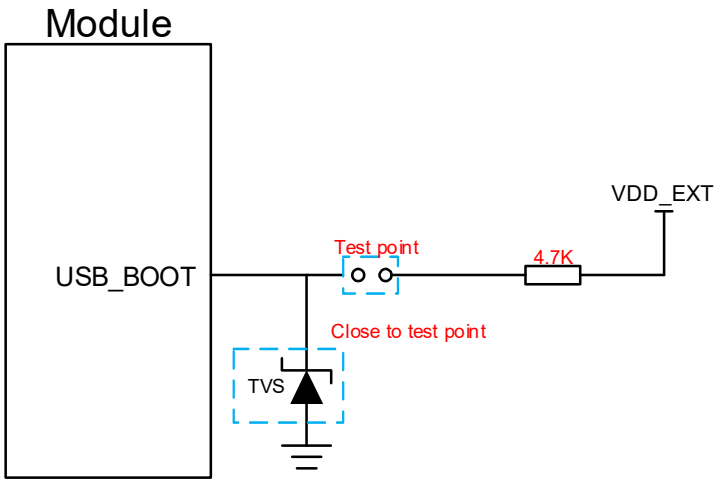

Figure 28: Reference Circuit of USB_BOOT Interface

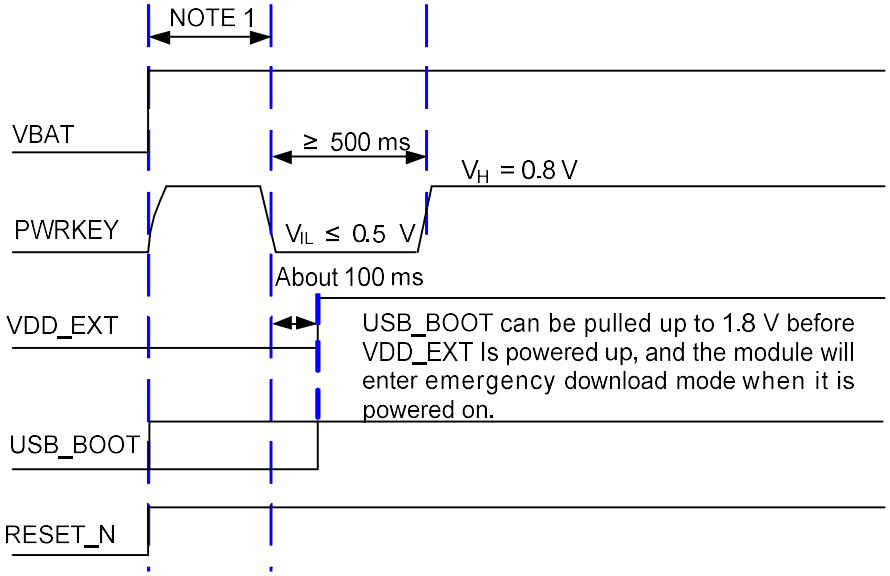

Figure 29: Emergency Download Mode Timing

NOTE

1. Make sure that VBAT is stable before pulling down PWRKEY pin. It is recommended that the time between powering up VBAT and pulling down PWRKEY pin is no less than 30 ms.
2. When using MCU to control module to enter the emergency download mode, follow the above timing sequence. It is not recommended to pull up USB_BOOT to 1.8 V before powering up VBAT. Short the test points as shown in ***Figure 28*** can manually force the module to enter download mode.

4 GNSS Receiver

4.1. General Description

EG91 series module includes a fully integrated global navigation satellite system solution that supports GPS, GLONASS, BeiDou, Galileo and QZSS.

EG91 series module supports standard *NMEA-0183* protocol, and outputs NMEA sentences at 1 Hz data update rate via USB interface by default.

By default, EG91 series module GNSS engine is switched off. It has to be switched on via AT command. For more details about GNSS engine technology and configurations, see ***document [4]***.

4.2. GNSS Performance

The following table shows GNSS performance of EG91 series module.

Table 22: GNSS Performance

Parameter	Description	Conditions	Typ.	Unit
Sensitivity (GNSS)	Cold start	Autonomous	-146	dBm
	Reacquisition	Autonomous	-157	dBm
	Tracking	Autonomous	-157	dBm
TTFF (GNSS)	Cold start @ open sky	Autonomous	34.6	s
		XTRA enabled	11.57	s
	Warm start @ open sky	Autonomous	26.09	s
		XTRA enabled	3.7	s
	Hot start	Autonomous	1.8	s

	@ open sky	XTRA enabled	3.4	s
Accuracy (GNSS)	CEP-50	Autonomous @ open sky	< 2.5	m

NOTE

1. Tracking sensitivity: the minimum GNSS signal power at which the module can maintain lock (keep positioning for at least 3 minutes continuously).
2. Reacquisition sensitivity: the minimum GNSS signal power required for the module to maintain lock within 3 minutes after loss of lock.
3. Cold start sensitivity: the minimum GNSS signal power at which the module can fix position successfully within 3 minutes after executing cold start command.

4.3. Layout Guidelines

The following layout guidelines should be taken into account in your design.

- Maximize the distance among GNSS antenna, main antenna and Rx-diversity antenna [11]
- Digital circuits such as (U)SIM card, USB interface, camera module and display connector should be kept away from the antennas.
- Use ground vias around the GNSS trace and sensitive analog signal traces to provide coplanar isolation and protection.
- Keep the characteristic impedance for ANT_GNSS trace as 50 Ω.

See ***Chapter 5*** for GNSS antenna reference design and antenna installation information.

[11] EG91-AUX does not support Rx-diversity.

5 Antenna Interfaces

EG91 series module antenna interfaces include a main antenna interface and an Rx-diversity antenna interface which is used to resist the fall of signals caused by high speed movement and multipath effect, and a GNSS antenna interface which is only supported on EG91-AUX/-EX/-NA/-NAL/-NAX/-NAXD/-NAXDL/-NAL/-VX. The impedance of the antenna port is 50 Ω.

5.1. Main/Rx-diversity Antenna Interfaces

5.1.1. Pin Definition

The pin definition of main antenna and Rx-diversity antenna interfaces is shown below.

Table 23: Pin Definition of RF Antenna

Pin Name	Pin No.	I/O	Description	Comment
ANT_MAIN	60	AIO	Main antenna Interface	50 Ω impedance
ANT_DIV (EG91-E)	49	AI	Diversity antenna interface	50 Ω impedance. If unused, keep it open.
ANT_DIV (EG91-EX/-NA/-NAL/-NAX/-NAXD/-NAXDL/-VX)	56	AI	Diversity receive antenna interface	50 Ω impedance. If unused, keep it open.

NOTE

1. Pin 49 is defined as ANT_GNSS on EG91-AUX/-EX/-NA/-NAL/-NAX/-NAXD/-NAXDL/-VX, while it is defined as ANT_DIV on EG91-E.
2. Pin 56 is RESERVED on EG91-E, while it is defined as ANT_DIV on EG91-EX/-NA/-NAL/-NAX/-NAXD/-NAXDL/-VX. Rx-diversity antenna is not supported on EG91-AUX.

5.1.2. Operating Frequency

Table 24: Module Operating Frequencies

3GPP Band	Transmit	Receive	Unit
GSM850	824–849	869–894	MHz
EGSM900	880–915	925–960	MHz
DCS1800	1710–1785	1805–1880	MHz
PCS1900	1850–1910	1930–1990	MHz
WCDMA B1	1920–1980	2110–2170	MHz
WCDMA B2	1850–1910	1930–1990	MHz
WCDMA B4	1710–1755	2110–2155	MHz
WCDMA B5	824–849	869–894	MHz
WCDMA B8	880–915	925–960	MHz
LTE-FDD B1	1920–1980	2110–2170	MHz
LTE FDD B2	1850–1910	1930–1990	MHz
LTE-FDD B3	1710–1785	1805–1880	MHz
LTE FDD B4	1710–1755	2110–2155	MHz
LTE FDD B5	824–849	869–894	MHz
LTE-FDD B7	2500–2570	2620–2690	MHz
LTE-FDD B8	880–915	925–960	MHz
LTE FDD B12	699–716	729–746	MHz
LTE FDD B13	777–787	746–756	MHz
LTE-FDD B20	832–862	791–821	MHz
LTE-FDD B25	1850–1915	1930–1995	MHz
LTE-FDD B26	814–849	859–894	MHz
LTE-FDD B28	703–748	758–803	MHz

LTE-FDD B66	1710–1780	2110–2180	MHz

5.1.3. Reference Design of RF Antenna Interface

A reference design of ANT_MAIN and ANT_DIV antenna pads is shown as below. A π-type matching circuit should be reserved for better RF performance. The capacitors are not mounted by default.

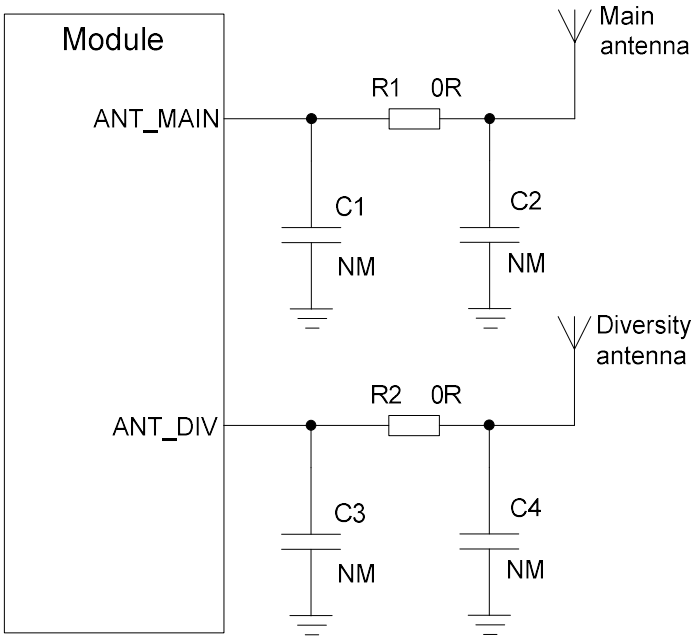

Figure 30: Reference Circuit of RF Antenna Interface

NOTE

1. EG91-AUX does not support Rx-diversity.
2. Keep a proper distance between the main antenna and the Rx-diversity antenna to improve the receiving sensitivity.
3. For the operation of ANT_MAIN and ANT_DIV, see **AT+QCFG="divctl"** in ***document [5]***.
4. Place the π-type matching components (R1/C1/C2, R2/C3/C4) as close to the antenna as possible.

5.2. GNSS Antenna Interface

The GNSS antenna interface is only supported on EG91-NA/-VX/-EX/-NAX/-NAXD/-NAXDL/-AUX/-NAL. The following tables show pin definition and frequency specification of GNSS antenna interface.

Table 25: Pin Definition of GNSS Antenna Interface

Pin Name	Pin No.	I/O	Description	Comment
ANT_GNSS (EG91-AUX/-EX/-NA/-NAL/-NAX/-NAXD /-NAXDL/-VX)	49	AI	GNSS antenna	50 Ω impedance

Table 26: GNSS Frequency

Type	Frequency	Unit
GPS	1575.42 ±1.023	MHz
GLONASS	1597.5–1605.8	MHz
Galileo	1575.42 ±2.046	MHz
BeiDou	1561.098 ±2.046	MHz
QZSS	1575.42	MHz

A reference design of GNSS antenna is shown as below.

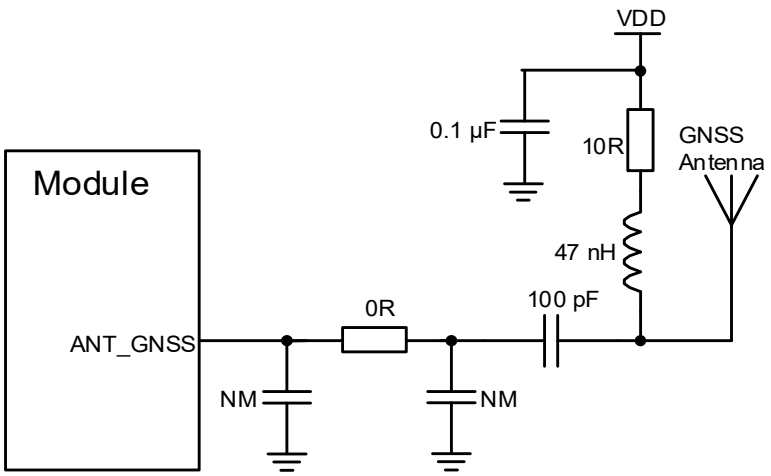

Figure 31: Reference Circuit of GNSS Antenna

NOTE

1. An external LDO can be selected to supply power according to the active antenna requirement.
2. If the module is designed with a passive antenna, then the VDD circuit is not needed.

5.3. Reference Design of RF Layout

For user's PCB, the characteristic impedance of all RF traces should be controlled to 50 Ω. The impedance of the RF traces is usually determined by the trace width (W), the materials' dielectric constant, the height from the reference ground to the signal layer (H), and the spacing between RF traces and grounds (S). Microstrip or coplanar waveguide is typically used in RF layout to control characteristic impedance. The following are reference designs of microstrip or coplanar waveguide with different PCB structures.

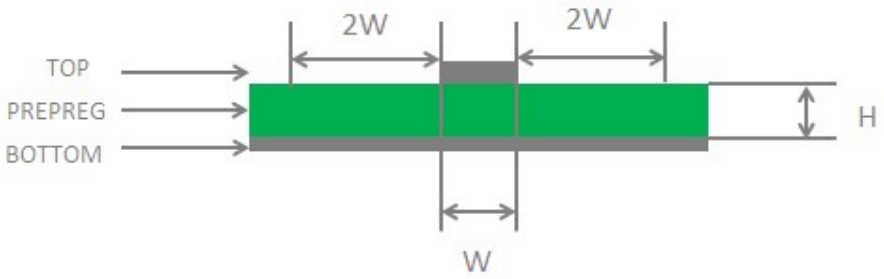

Figure 32: Microstrip Design on a 2-layer PCB

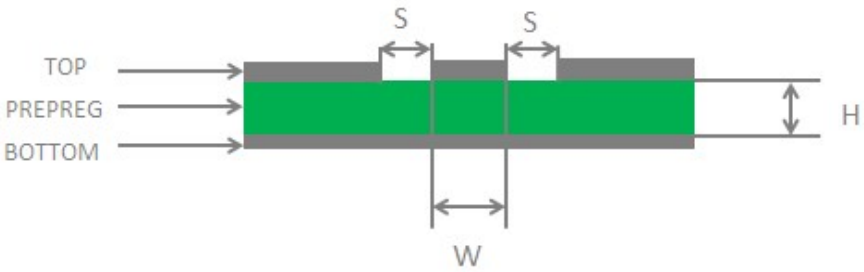

Figure 33: Coplanar Waveguide Design on a 2-layer PCB

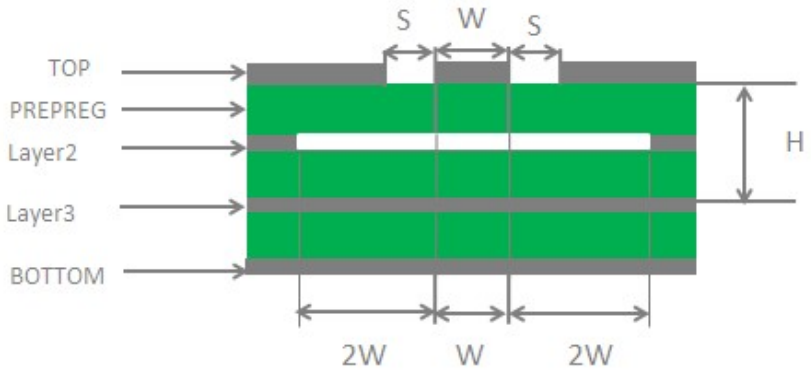

Figure 34: Coplanar Waveguide Design on a 4-layer PCB (Layer 3 as Reference Ground)

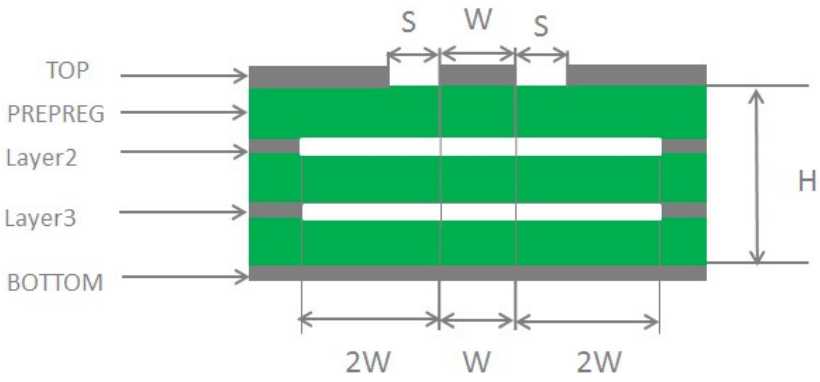

Figure 35: Coplanar Waveguide Design on a 4-layer PCB (Layer 4 as Reference Ground)

To ensure RF performance and reliability, the following principles should be complied with in RF layout design:

- Use an impedance simulation tool to accurately control the characteristic impedance of RF traces to 50 Ω.
- The GND pins adjacent to RF pins should not be designed as thermal relief pads, and should be fully connected to ground.
- The distance between the RF pins and the RF connector should be as short as possible, and all the right-angle traces should be changed to curved ones. The recommended trace angle is 135°.
- There should be clearance under the signal pin of the antenna connector or solder joint.
- The reference ground of RF traces should be complete. Meanwhile, adding some ground vias around RF traces and the reference ground could help to improve RF performance. The distance between the ground vias and RF traces should be no less than two times the width of RF signal traces (2 × W).
- Keep RF traces away from interference sources, and avoid intersection and paralleling between traces on adjacent layers.

For more details about RF layout, refer to ***document [6]***.

5.4. Antenna Installation

5.4.1. Antenna Requirement

The following table shows the requirements on main antenna, Rx-diversity antenna[12] and GNSS antenna.

Table 27: Antenna Requirements

Type	Requirements
GNSS [2)]	Frequency range: 1559–1609 MHz Polarization: RHCP or linear VSWR: < 2 (Typ.) Passive antenna gain: > 0 dBi Active antenna noise figure: < 1.5 dB Active antenna gain: > 0 dBi Active antenna embedded LNA gain: < 17 dB
GSM/WCDMA/LTE	VSWR: ≤ 2 Efficiency : > 30 % Max. input power: 50 W Input impedance: 50 Ω Cable insertion loss: **< 1 dB:** LB (<1 GHz) **< 1.5 dB:** MB (1–2.3 GHz) **< 2 dB:** HB (> 2.3 GHz)

NOTE

It is recommended to use a passive GNSS antenna when LTE B13 or B14 is supported, as the use of active antenna may generate harmonics which will affect the GNSS performance.

[12] EG91-AUX does not support Rx-diversity.

5.4.2. Recommended RF Connector for Antenna Installation

If RF connector is used for antenna connection, it is recommended to use U.FL-R-SMT connector provided by *Hirose*.

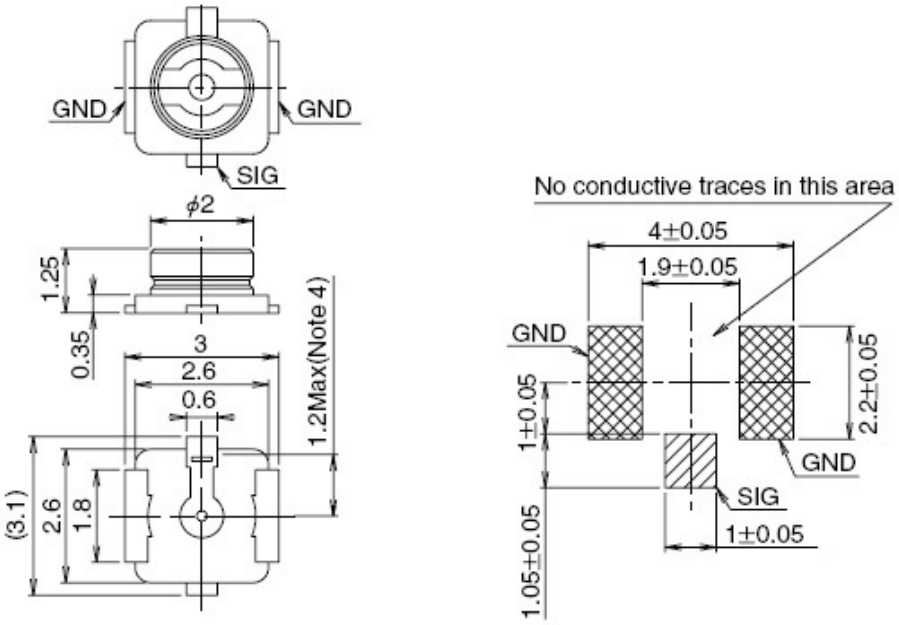

Figure 36: Dimensions of the U.FL-R-SMT Connector (Unit: mm)

U.FL-LP serial connectors listed in the following figure can be used to match the U.FL-R-SMT.

	U.FL-LP-040	U.FL-LP-066	U.FL-LP(V)-040	U.FL-LP-062	U.FL-LP-088
Part No.	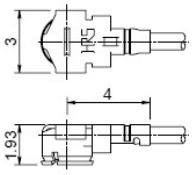	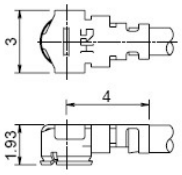	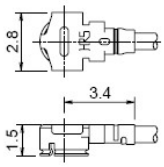	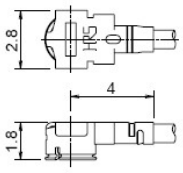	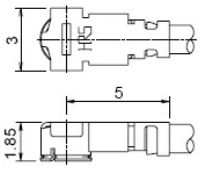
Mated Height	2.5mm Max. (2.4mm Nom.)	2.5mm Max. (2.4mm Nom.)	2.0mm Max. (1.9mm Nom.)	2.4mm Max. (2.3mm Nom.)	2.4mm Max. (2.3mm Nom.)
Applicable cable	Dia. 0.81mm Coaxial cable	Dia. 1.13mm and Dia. 1.32mm Coaxial cable	Dia. 0.81mm Coaxial cable	Dia. 1mm Coaxial cable	Dia. 1.37mm Coaxial cable
Weight (mg)	53.7	59.1	34.8	45.5	71.7
RoHS	YES				

Figure 37: Mechanicals of U.FL-LP Connectors

The following figure describes the space factor of mated connector.

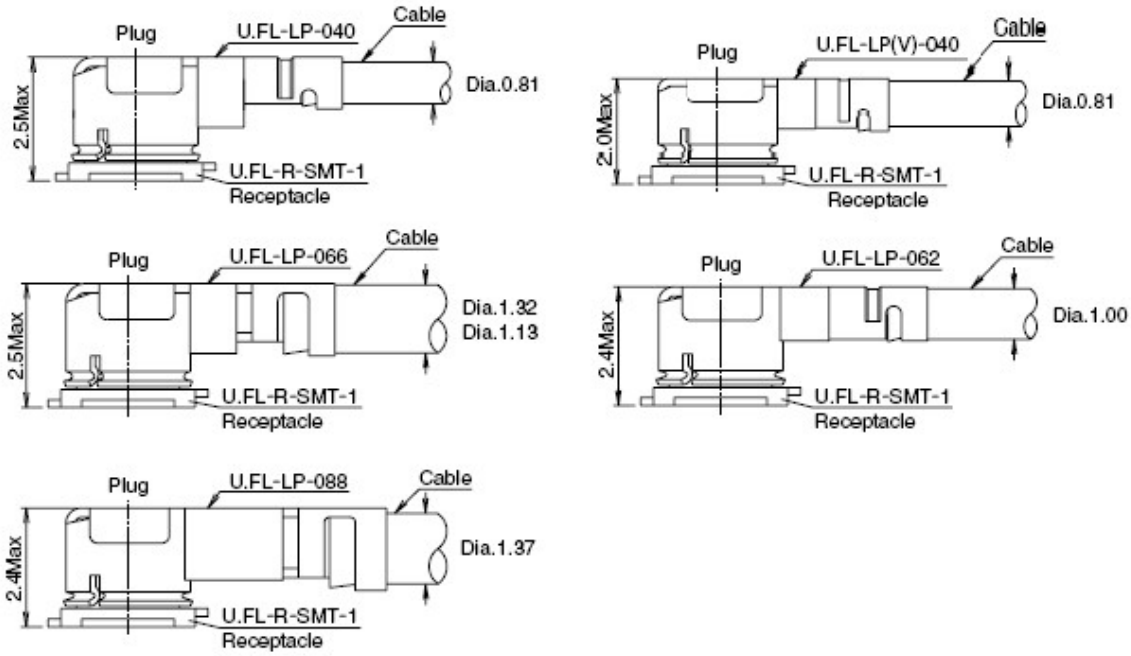

Figure 38: Space Factor of Mated Connector (Unit: mm)

For more details, visit http://www.hirose.com.

6 Reliability, Radio and Electrical Characteristics

6.1. Absolute Maximum Ratings

Absolute maximum ratings for power supply and voltage on digital and analog pins of the module are listed in the following table.

Table 28: Absolute Maximum Ratings

Parameter	Min.	Max.	Unit
VBAT_RF/VBAT_BB	-0.3	4.7	V
USB_VBUS	-0.3	5.5	V
Peak Current of VBAT_BB	0	0.8	A
Peak Current of VBAT_RF	0	1.8	A
Voltage at Digital Pins	-0.3	2.3	V

6.2. Power Supply Ratings

Table 29: Power Supply Ratings

Parameter	Description	Conditions	Min.	Typ.	Max.	Unit
VBAT	VBAT_BB and VBAT_RF	The actual input voltages must be kept between the minimum and maximum values.	3.3	3.8	4.3	V
	Voltage drop during	Maximum power control			400	mV

	burst transmission	level on EGSM900				
I_{VBAT}	Peak supply current (during transmission slot)	Maximum power control level on EGSM900		1.8	2.0	A
USB_VBUS	USB connection detection		3.0	5.0	5.25	V

6.3. Operating and Storage Temperatures

The operating and storage temperatures are listed in the following table.

Table 30: Operating and Storage Temperatures

Parameter	Min.	Typ.	Max.	Unit
Operating Temperature Range [13]	-35	+25	+75	ºC
Extended Temperature Range [14]	-40		+85	ºC
Storage Temperature Range	-40		+90	ºC

6.4. Current Consumption

The values of current consumption are shown below.

Table 31: EG91-AUX Current Consumption

Description	Conditions	Typ.	Unit
OFF state	Power down	10	μA

[13] Within operating temperature range, the module is 3GPP compliant.

[14] Within extended temperature range, the module remains the ability to establish and maintain a voice, SMS, data transmission, etc. There is no unrecoverable malfunction. There are also no effects on radio spectrum and no harm to radio network. Only one or more parameters like P_{out} might reduce in their value and exceed the specified tolerances. When the temperature returns to the normal operating temperature levels, the module will meet 3GPP specifications again.

Sleep state	**AT+CFUN=0** (USB disconnected)	1.1	mA
	GSM DRX = 2 (USB disconnected)	2.0	mA
	GSM DRX = 5 (USB suspend)	1.6	mA
	GSM DRX = 9 (USB disconnected)	1.4	mA
	WCDMA PF = 64 (USB disconnected)	1.8	mA
	WCDMA PF = 64 (USB suspend)	2.1	mA
	WCDMA PF = 512 (USB disconnected)	1.2	mA
	LTE-FDD PF = 64 (USB disconnected)	2.3	mA
	LTE-FDD PF = 64 (USB suspend)	2.8	mA
	LTE-FDD PF = 256 (USB disconnected)	1.5	mA
Idle state	GSM DRX = 5 (USB disconnected)	18	mA
	GSM DRX = 5 (USB connected)	28	mA
	WCDMA PF = 64 (USB disconnected)	17	mA
	WCDMA PF = 64 (USB connected)	28	mA
	LTE-FDD PF = 64 (USB disconnected)	23	mA
	LTE-FDD PF = 64 (USB connected)	34	mA
GPRS data transfer	GSM850 4DL/1UL @ 32.48 dBm	217.9	mA
	GSM850 3DL/2UL @ 31.89dBm	372.3	mA
	GSM850 2DL/3UL @ 29.45 dBm	432.9	mA
	GSM850 1DL/4UL @ 28.31 dBm	513.9	mA
	EGSM900 4DL/1UL @ 33.17 dBm	235.1	mA
	EGSM900 3DL/2UL @ 32.16 dBm	387.7	mA
	EGSM900 2DL/3UL @ 29.77 dBm	446.5	mA
	EGSM900 1DL/4UL @ 28.59 dBm	540.0	mA
	DCS1800 4DL/1UL @ 30.19 dBm	154.4	mA

	DCS1800 3DL/2UL @ 29.23 dBm	258.0	mA
	DCS1800 2DL/3UL @ 27.19 dBm	332.4	mA
	DCS1800 1DL/4UL @ 26.14 dBm	419.1	mA
	PCS1900 4DL/1UL @ 30.22 dBm	155.0	mA
	PCS1900 3DL/2UL @ 29.48 dBm	259.5	mA
	PCS1900 2DL/3UL @ 27.50 dBm	333.1	mA
	PCS1900 1DL/4UL @ 26.44 dBm	416.8	mA
EDGE data transfer	GSM850 4DL/1UL PCL = 8 @ 25.75 dBm	161.8	mA
	GSM850 3DL/2UL PCL = 8 @ 25.49 dBm	291.8	mA
	GSM850 2DL/3UL PCL = 8 @ 23.26 dBm	410.2	mA
	GSM850 1DL/4UL PCL = 8 @ 22.01 dBm	520.5	mA
	EGSM900 4DL/1UL PCL = 8 @ 26.04 dBm	161.5	mA
	EGSM900 3DL/2UL PCL = 8 @ 25.86 dBm	294.6	mA
	EGSM900 2DL/3UL PCL = 8 @ 23.62 dBm	411.4	mA
	EGSM900 1DL/4UL PCL = 8 @ 22.27 dBm	520.8	mA
	DCS1800 4DL/1UL PCL = 2 @ 26.12 dBm	139.4	mA
	DCS1800 3DL/2UL PCL = 2 @ 25.02 dBm	250.7	mA
	DCS1800 2DL/3UL PCL = 2 @ 22.75 dBm	355.3	mA
	DCS1800 1DL/4UL PCL = 2 @ 21.47 dBm	452.1	mA
	PCS1900 4DL/1UL PCL = 2 @ 26.36 dBm	138.3	mA
	PCS1900 3DL/2UL PCL = 2 @ 25.2 dBm	248.2	mA
	PCS1900 2DL/3UL PCL = 2 @ 22.94 dBm	351.5	mA
	PCS1900 1DL/4UL PCL = 2 @ 21.67 dBm	448.8	mA
WCDMA data transfer	WCDMA B1 HSDPA @ 22.30 dBm	609.6	mA
	WCDMA B1 HSUPA @ 21.50 dBm	640.5	mA

	WCDMA B2 HSDPA @ 22.14 dBm	557.4	mA
	WCDMA B2 HSUPA @ 21.18 dBm	539.4	mA
	WCDMA B5 HSDPA @ 22.6 dBm	588.2	mA
	WCDMA B5 HSUPA @ 21.45 dBm	545.2	mA
	WCDMA B8 HSDPA @ 21.92 dBm	578.1	mA
	WCDMA B8 HSUPA @ 21.93 dBm	592.5	mA
LTE data transfer	LTE-FDD B1 @ 22.96 dBm	777.4	mA
	LTE-FDD B2 @ 22.79 dBm	634.4	mA
	LTE-FDD B3 @ 23.09 dBm	697.9	mA
	LTE-FDD B4 @ 22.83 dBm	704.6	mA
	LTE-FDD B5 @ 23.05 dBm	657.1	mA
	LTE-FDD B7 @ 22.71 dBm	765.3	mA
	LTE-FDD B8 @ 22.80 dBm	635.3	mA
	LTE-FDD B28 @ 22.84 dBm	670.0	mA
	LTE-FDD B66 @ 22.73 dBm	725.9	mA
GSM voice call	GSM850 PCL5 @32.57dBm	227.8	mA
	EGSM900 PCL5 @33.21dBm	253.8	mA
	DCS1800 PCL0 @30.24dBm	168.0	mA
	PCS1900 PCL0 @30.33dBm	166.8	mA
WCDMA voice call	WCDMA B1 @22.93dBm	656.2	mA
	WCDMA B2 @22.95dBm	579.8	mA
	WCDMA B5 @22.54dBm	589.8	mA
	WCDMA B8 @22.47dBm	627.8	mA

Table 32: EG91-E Current Consumption

Description	Conditions	Typ.	Unit
OFF state	Power down	13	μA
Sleep state	**AT+CFUN=0** (USB disconnected)	1.1	mA
	GSM DRX = 2 (USB disconnected)	2.0	mA
	GSM DRX = 5 (USB suspended)	1.9	mA
	GSM DRX = 9 (USB disconnected)	1.3	mA
	WCDMA PF = 64 (USB disconnected)	1.7	mA
	WCDMA PF = 64 (USB suspended)	2.1	mA
	WCDMA PF = 512 (USB disconnected)	1.1	mA
	LTE-FDD PF = 64 (USB disconnected)	2.1	mA
	LTE-FDD PF = 64 (USB suspended)	2.6	mA
	LTE-FDD PF = 256 (USB disconnected)	1.4	mA
Idle state	GSM DRX = 5 (USB disconnected)	19.0	mA
	GSM DRX = 5 (USB connected)	29.0	mA
	WCDMA PF = 64 (USB disconnected)	19.0	mA
	WCDMA PF = 64 (USB connected)	29.0	mA
	LTE-FDD PF = 64 (USB disconnected)	19.0	mA
	LTE-FDD PF = 64 (USB connected)	29.0	mA
GPRS data transfer	EGSM900 4DL/1UL @ 32.67 dBm	260	mA
	EGSM900 3DL/2UL @ 32.59 dBm	463	mA
	EGSM900 2DL/3UL @ 30.74 dBm	552	mA
	EGSM900 1DL/4UL @ 29.26 dBm	619	mA
	DCS1800 4DL/1UL @ 29.2 dBm	165	mA
	DCS1800 3DL/2UL @ 29.13 dBm	267	mA
	DCS1800 2DL/3UL @ 29.01 dBm	406	mA

	DCS1800 1DL/4UL @ 28.86 dBm	467	mA
EDGE data transfer	EGSM900 4DL/1UL PCL = 8 @ 27.1 dBm	163	mA
	EGSM900 3DL/2UL PCL = 8 @ 27.16 dBm	274	mA
	EGSM900 2DL/3UL PCL = 8 @ 26.91 dBm	383	mA
	EGSM900 1DL/4UL PCL = 8 @ 26.12 dBm	463	mA
	DCS1800 4DL/1UL PCL = 2 @ 25.54 dBm	136	mA
	DCS1800 3DL/2UL PCL = 2 @ 25.68 dBm	220	mA
	DCS1800 2DL/3UL PCL = 2 @ 25.61 dBm	306	mA
	DCS1800 1DL/4UL PCL = 2 @ 25.41 dBm	396	mA
WCDMA data transfer	WCDMA B1 HSDPA CH10700 @ 22.29 dBm	507	mA
	WCDMA B1 HSUPA CH10700 @ 21.79 dBm	516	mA
	WCDMA B8 HSDPA CH3012 @ 22.47 dBm	489	mA
	WCDMA B8 HSUPA CH3012 @ 21.98 dBm	482	mA
LTE data transfer	LTE-FDD B1 CH18300 @ 22.98 dBm	685	mA
	LTE-FDD B3 CH19575 @ 23.23 dBm	698	mA
	LTE-FDD B7 CH21100 @ 23.46 dBm	723	mA
	LTE-FDD B8 CH21625 @ 23.35 dBm	655	mA
	LTE-FDD B20 CH24300 @ 23.41 dBm	723	mA
	LTE-FDD B28A CH27360 @ 23.16 dBm	660	mA
GSM voice call	EGSM900 PCL = 5 @ 32.5 dBm	258	mA
	DCS1800 PCL = 0 @ 29.23 dBm	159	mA
WCDMA voice call	WCDMA B1 CH10700 @ 23.06 dBm	555	mA
	WCDMA B8 CH3012 @ 23.45 dBm	535	mA

Table 33: EG91-EX Current Consumption

Description	Conditions	Typ.	Unit

OFF state	Power down	15	μA
Sleep state	**AT+CFUN=0** (USB disconnected)	1.3	mA
	GSM DRX = 2 (USB disconnected)	2.3	mA
	GSM DRX = 5 (USB suspend)	2.0	mA
	GSM DRX = 9 (USB disconnected)	1.6	mA
	WCDMA PF = 64 (USB disconnected)	1.8	mA
	WCDMA PF = 64 (USB suspend)	2.1	mA
	WCDMA PF = 512 (USB disconnected)	1.3	mA
	LTE-FDD PF = 64 (USB disconnected)	2.3	mA
	LTE-FDD PF = 64 (USB suspend)	2.6	mA
	LTE-FDD PF = 256 (USB disconnected)	1.5	mA
Idle state	GSM DRX = 5 (USB disconnected)	21.0	mA
	GSM DRX = 5 (USB connected)	31.0	mA
	WCDMA PF = 64 (USB disconnected)	21.0	mA
	WCDMA PF = 64 (USB connected)	31.0	mA
	LTE-FDD PF = 64 (USB disconnected)	21.0	mA
	LTE-FDD PF = 64 (USB connected)	31.0	mA
GPRS data transfer	EGSM900 4DL/1UL @ 33.06 dBm	247.9	mA
	EGSM900 3DL/2UL @ 32.93 dBm	450.8	mA
	EGSM900 2DL/3UL @ 31.1 dBm	536.4	mA
	EGSM900 1DL/4UL @ 29.78 dBm	618	mA
	DCS1800 4DL/1UL @ 29.3 dBm	144	mA
	DCS1800 3DL/2UL @ 29.3 dBm	253.4	mA
	DCS1800 2DL/3UL @ 29.21 dBm	355.4	mA
	DCS1800 1DL/4UL @ 29.07 dBm	455.7	mA

EDGE data transfer	EGSM900 4DL/1UL PCL = 8 @ 27.29 dBm	169.5	mA
	EGSM900 3DL/2UL PCL = 8 @ 27.01 dBm	305.06	mA
	EGSM900 2DL/3UL PCL = 8 @ 26.86 dBm	434	mA
	EGSM900 1DL/4UL PCL = 8 @ 25.95 dBm	548	mA
	DCS1800 4DL/1UL PCL = 2 @ 26.11 dBm	135	mA
	DCS1800 3DL/2UL PCL = 2 @ 25.8 dBm	244	mA
	DCS1800 2DL/3UL PCL = 2 @ 25.7 dBm	349	mA
	DCS1800 1DL/4UL PCL = 2 @ 25.6 dBm	455	mA
WCDMA data transfer	WCDMA B1 HSDPA @ 22.48 dBm	485	mA
	WCDMA B1 HSUPA @ 21.9 dBm	458	mA
	WCDMA B8 HSDPA @ 22.6 dBm	556	mA
	WCDMA B8 HSUPA @ 22.02 dBm	520	mA
LTE data transfer	LTE-FDD B1 @ 23.37 dBm	605	mA
	LTE-FDD B3 @ 23.3 dBm	667	mA
	LTE-FDD B7 @ 23.2 dBm	783	mA
	LTE-FDD B8 @ 23.09 dBm	637	mA
	LTE-FDD B20 @ 23.21 dBm	646	mA
	LTE-FDD B28 @ 22.76 dBm	661	mA
GSM voice call	EGSM900 PCL = 5 @ 32.36 dBm	259	mA
	DCS1800 PCL = 0 @ 29.5 dBm	149	mA
WCDMA voice call	WCDMA B1 @ 23.4 dBm	494	mA
	WCDMA B8 @ 23.6 dBm	608	mA

Table 34: EG91-NA Current Consumption

Description	Conditions	Typ.	Unit
OFF state	Power down	13	μA

Sleep state	**AT+CFUN=0** (USB disconnected)	1.0	mA
	WCDMA PF = 64 (USB disconnected)	2.2	mA
	WCDMA PF = 64 (USB suspended)	2.5	mA
	WCDMA PF = 512 (USB disconnected)	1.4	mA
	LTE-FDD PF = 64 (USB disconnected)	2.6	mA
	LTE-FDD PF = 64 (USB suspended)	2.9	mA
	LTE-FDD PF = 256 (USB disconnected)	1.7	mA
Idle state	WCDMA PF = 64 (USB disconnected)	14.0	mA
	WCDMA PF = 64 (USB connected)	26.0	mA
	LTE-FDD PF = 64 (USB disconnected)	15.0	mA
	LTE-FDD PF = 64 (USB connected)	26.0	mA
WCDMA data transfer	WCDMA B2 HSDPA CH9938 @ 22.45 dBm	569	mA
	WCDMA B2 HSUPA CH9938 @ 21.73 dBm	559	mA
	WCDMA B4 HSDPA CH1537 @ 23.05 dBm	572	mA
	WCDMA B4 HSUPA CH1537 @ 22.86 dBm	586	mA
	WCDMA B5 HSDPA CH4407 @ 23 dBm	518	mA
	WCDMA B5 HSUPA CH4407 @ 22.88 dBm	514	mA
LTE data transfer	LTE-FDD B2 CH1100 @ 23.29 dBm	705	mA
	LTE-FDD B4 CH2175 @ 23.19 dBm	693	mA
	LTE-FDD B5 CH2525 @ 23.39 dBm	601	mA
	LTE-FDD B12 CH5060 @ 23.16 dBm	650	mA
	LTE-FDD B13 CH5230 @ 23.36 dBm	602	mA
WCDMA voice call	WCDMA B2 CH9938 @ 23.34 dBm	627	mA
	WCDMA B4 CH1537 @ 23.47 dBm	591	mA
	WCDMA B5 CH4357 @ 23.37 dBm	536	mA

Table 35: EG91-NAL Current Consumption

Description	Conditions	Typ.	Unit
OFF state	Power down	8	μA
Sleep state	**AT+CFUN=0** (USB disconnected)	0.91	mA
	LTE-FDD PF=64 (USB disconnected)	2.47	mA
	LTE-FDD PF=64 (USB suspend)	2.6	mA
	LTE-FDD PF=256 (USB disconnected)	1.55	mA
Idle state	LTE-FDD PF=64 (USB disconnected)	19.1	mA
	LTE-FDD PF=64 (USB active)	28.73	mA
LTE data transfer	LTE-FDD B2 @ 23.23dBm	668	mA
	LTE-FDD B4 @ 23.47dBm	705	mA
	LTE-FDD B5 @ 23.45dBm	593	mA
	LTE-FDD B12 @ 23.44dBm	656	mA
	LTE-FDD B13 @ 23.46dBm	599	mA

Table 36: EG91-NAX Current Consumption

Description	Conditions	Typ.	Unit
OFF state	Power down	9	μA
Sleep state	**AT+CFUN=0** (USB disconnected)	1.1	mA
	WCDMA PF = 64 (USB disconnected)	2.1	mA
	WCDMA PF = 64 (USB suspend)	2.2	mA
	WCDMA PF = 512 (USB disconnected)	1.6	mA
	LTE-FDD PF = 64 (USB disconnected)	2.6	mA
	LTE-FDD PF = 64 (USB suspend)	2.7	mA
	LTE-FDD PF = 256 (USB disconnected)	1.8	mA
Idle state	WCDMA PF = 64 (USB disconnected)	16.7	mA

	WCDMA PF = 64 (USB connected)	32.2	mA
	LTE-FDD PF = 64 (USB disconnected)	14.0	mA
	LTE-FDD PF = 64 (USB connected)	32.6	mA
WCDMA data transfer	WCDMA B2 HSDPA @ 21.74 dBm	528	mA
	WCDMA B2 HSUPA @ 21.47 dBm	536	mA
	WCDMA B4 HSDPA @ 22.67 dBm	542	mA
	WCDMA B4 HSUPA @ 22.30 dBm	550	mA
	WCDMA B5 HSDPA @ 22.63 dBm	523	mA
	WCDMA B5 HSUPA @ 22.31 dBm	523	mA
LTE data transfer	LTE-FDD B2 @ 23.08 dBm	694	mA
	LTE-FDD B4 @ 23.31 dBm	691	mA
	LTE-FDD B5 @ 23.23 dBm	586	mA
	LTE-FDD B12 @ 23.03 dBm	613	mA
	LTE-FDD B13 @ 23.13 dBm	626	mA
	LTE-FDD B25 @ 22.96 dBm	689	mA
	LTE-FDD B26 @ 23.11 dBm	636	mA
WCDMA voice call	WCDMA B2 @ 23.08 dBm	581	mA
	WCDMA B4 @ 23.21 dBm	557	mA
	WCDMA B5 @ 23.29 dBm	534	mA

Table 37: EG91-NAXD Current Consumption

Description	Conditions	Typ.	Unit
OFF state	Power down	9	μA
Sleep state	**AT+CFUN=0** (USB disconnected)	1.1	mA
	WCDMA PF = 64 (USB disconnected)	2.1	mA
	WCDMA PF = 64 (USB suspend)	2.2	mA

	WCDMA PF = 512 (USB disconnected)	1.6	mA
	LTE-FDD PF = 64 (USB disconnected)	2.6	mA
	LTE-FDD PF = 64 (USB suspend)	2.7	mA
	LTE-FDD PF = 256 (USB disconnected)	1.8	mA
Idle state	WCDMA PF = 64 (USB disconnected)	16.7	mA
	WCDMA PF = 64 (USB connected)	32.2	mA
	LTE-FDD PF = 64 (USB disconnected)	14.0	mA
	LTE-FDD PF = 64 (USB connected)	32.6	mA
WCDMA data transfer	WCDMA B2 HSDPA @ 21.74 dBm	528	mA
	WCDMA B2 HSUPA @ 21.47 dBm	536	mA
	WCDMA B4 HSDPA @ 22.67 dBm	542	mA
	WCDMA B4 HSUPA @ 22.30 dBm	550	mA
	WCDMA B5 HSDPA @ 22.63 dBm	523	mA
	WCDMA B5 HSUPA @ 22.31 dBm	523	mA
LTE data transfer	LTE-FDD B2 @ 23.08 dBm	694	mA
	LTE-FDD B4 @ 23.31 dBm	691	mA
	LTE-FDD B5 @ 23.23 dBm	586	mA
	LTE-FDD B12 @ 23.03 dBm	613	mA
	LTE-FDD B13 @ 23.13 dBm	626	mA
	LTE-FDD B25 @ 22.96 dBm	689	mA
	LTE-FDD B26 @ 23.11 dBm	636	mA

Table 38: EG91-NAXDL Current Consumption

Description	Conditions	Typ.	Unit
OFF state	Power down	9	μA
Sleep state	**AT+CFUN=0** (USB disconnected)	1.1	mA

	LTE-FDD PF = 64 (USB disconnected)	2.6	mA
	LTE-FDD PF = 64 (USB suspend)	2.7	mA
	LTE-FDD PF = 256 (USB disconnected)	1.8	mA
Idle state	LTE-FDD PF = 64 (USB disconnected)	14.0	mA
	LTE-FDD PF = 64 (USB connected)	32.6	mA
LTE data transfer	LTE-FDD B2 @ 23.08 dBm	694	mA
	LTE-FDD B4 @ 23.31 dBm	691	mA
	LTE-FDD B5 @ 23.23 dBm	586	mA
	LTE-FDD B12 @ 23.03 dBm	613	mA
	LTE-FDD B13 @ 23.13 dBm	626	mA
	LTE-FDD B25 @ 22.96 dBm	689	mA
	LTE-FDD B26 @ 23.11 dBm	636	mA

Table 39: EG91-VX Current Consumption

Description	Conditions	Typ.	Unit
OFF state	Power down	9	μA
Sleep state	**AT+CFUN=0** (USB disconnected)	TBD	mA
	LTE-FDD PF = 64 (USB disconnected)	TBD	mA
	LTE-FDD PF = 64 (USB suspended)	TBD	mA
	LTE-FDD PF = 256 (USB disconnected)	TBD	mA
Idle state	LTE-FDD PF = 64 (USB disconnected)	16.5	mA
	LTE-FDD PF = 64 (USB connected)	30.8	mA
LTE data transfer	LTE-FDD B4 CH2175 @ 23.36 dBm	715	mA
	LTE-FDD B13 CH5230 @ 23.38 dBm	642	mA

Table 40: GNSS Current Consumption of EG91 Series Module

Description	Conditions	Typ.	Unit
Searching (**AT+CFUN=0**)	Cold start @ Passive antenna	54	mA
	Hot start @ Passive antenna	54	mA
	Lost state @ Passive antenna	53	mA
Tracking (**AT+CFUN=0**)	Open sky @ Passive antenna	32	mA

6.5. RF Output Power

The following table shows the RF output power of EG91 series module.

Table 41: RF Output Power

Frequency Bands	Max. Output Power	Min. Output Power
GSM850	33 dBm ±2 dB	5 dBm ±5 dB
EGSM900	33 dBm ±2 dB	5 dBm ±5 dB
DCS1800	30 dBm ±2 dB	0 dBm ±5 dB
PCS1900	30 dBm ±2 dB	0 dBm ±5 dB
GSM850 (8-PSK)	27 dBm ±3 dB	5 dBm ±5 dB
EGSM900 (8-PSK)	27 dBm ±3 dB	5 dBm ±5 dB
DCS1800 (8-PSK)	26 dBm ±3 dB	0 dBm ±5 dB
PCS1900 (8-PSK)	26 dBm ±3 dB	0 dBm ±5 dB
WCDMA B1/B2/B4/B5/B8	24 dBm +1/-3 dB	< -49 dBm
LTE-FDD B1/B2/B3/B4/B5/B7/ B8/B12/B13/B20/B25/B26/B28/B66	23 dBm ±2 dB	< -39 dBm

NOTE

In GPRS 4 slots TX mode, the maximum output power is reduced by 3.0 dB. The design conforms to the GSM specification as described in ***Chapter 13.16*** of *3GPP TS 51.010-1*.

6.6. RF Receiving Sensitivity

The following tables show the conducted RF receiving sensitivity of EG91 series module.

Table 42: EG91-AUX Conducted RF Receiving Sensitivity

Frequency Band	Primary	Diversity	SIMO	3GPP
GSM850	-109.1 dBm	-	-	-102 dBm
EGSM900	-109.7 dBm	-	-	-102 dBm
DCS1800	-110.0 dBm	-	-	-102 dBm
PCS1900	-109.4 dBm	-	-	-102 dBm
WCDMA B1	-109.2 dBm	-	-	-106.7 dBm
WCDMA B2	-109.8 dBm	-	-	-104.7 dBm
WCDMA B5	-110 dBm	-	-	-104.7 dBm
WCDMA B8	-110 dBm	-	-	-103.7 dBm
LTE-FDD B1 (10 MHz)	-97.2 dBm	-	-	-96.3 dBm
LTE-FDD B2 (10 MHz)	-97.7 dBm	-	-	-94.3 dBm
LTE-FDD B3 (10 MHz)	-98.2 dBm	-	-	-93.3 dBm
LTE-FDD B4 (10 MHz)	-97.7 dBm	-	-	-96.3 dBm
LTE-FDD B5 (10 MHz)	-99.2 dBm	-	-	-94.3 dBm
LTE-FDD B7 (10 MHz)	-96.7 dBm	-	-	-94.3 dBm
LTE-FDD B8 (10 MHz)	-98.0 dBm	-	-	-93.3 dBm
LTE-FDD B28 (10 MHz)	-98.7 dBm	-	-	-94.8 dBm
LTE-FDD B66 (10 MHz)	-97.7 dBm	-	-	-95.8 dBm

Table 43: EG91-E Conducted RF Receiving Sensitivity

Frequency Band	Receiving Sensitivity (Typ.)			3GPP (SIMO)
	Primary	Diversity	SIMO	
EGSM900	-108.6 dBm	-	-	-102 dBm
DCS1800	-109.4 dBm	-	-	-102 dBm
WCDMA B1	-109.5 dBm	-110 dBm	-112.5 dBm	-106.7 dBm
WCDMA B8	-109.5 dBm	-110 dBm	-112.5 dBm	-103.7 dBm
LTE-FDD B1 (10 MHz)	-97.5 dBm	-98.3 dBm	-101.4 dBm	-96.3 dBm
LTE-FDD B3 (10 MHz)	-98.3 dBm	-98.5 dBm	-101.5 dBm	-93.3 dBm
LTE-FDD B7 (10 MHz)	-96.3 dBm	-98.4 dBm	-101.3 dBm	-94.3 dBm
LTE-FDD B8 (10 MHz)	-97.1 dBm	-99.1 dBm	-101.2 dBm	-93.3 dBm
LTE-FDD B20 (10 MHz)	-97 dBm	-99 dBm	-101.3 dBm	-93.3 dBm
LTE-FDD B28A (10 MHz)	-98.3 dBm	-99 dBm	-101.4 dBm	-94.8 dBm

Table 44: EG91-EX Conducted RF Receiving Sensitivity

Frequency Band	Receiving Sensitivity (Typ.)			3GPP (SIMO)
	Primary	Diversity	SIMO	
EGSM900	-109.8 dBm	-	-	-102 dBm
DCS1800	-109.8 dBm	-	-	-102 dBm
WCDMA B1	-110 dBm	-111 dBm	-112.5 dBm	-106.7 dBm
WCDMA B8	-110 dBm	-111 dBm	-112.5 dBm	-103.7 dBm
LTE-FDD B1 (10 MHz)	-98.7 dBm	-98.8 dBm	-102.4 dBm	-96.3 dBm
LTE-FDD B3 (10 MHz)	-98.3 dBm	-99.5 dBm	-102.5 dBm	-93.3 dBm

LTE-FDD B7 (10 MHz)	-97.5 dBm	-98.4 dBm	-100.3 dBm	-94.3 dBm
LTE-FDD B8 (10 MHz)	-98.7 dBm	-99.6 dBm	-102.2 dBm	-93.3 dBm
LTE-FDD B20 (10 MHz)	-97 dBm	-97.5 dBm	-102.2 dBm	-93.3 dBm
LTE-FDD B28 (10 MHz)	-98.2 dBm	-99.5 dBm	-102 dBm	-94.8 dBm

Table 45: EG91-NA Conducted RF Receiving Sensitivity

Frequency Band	Receiving Sensitivity (Typ.)			3GPP (SIMO)
	Primary	Diversity	SIMO	
WCDMA B2	-110 dBm	-110 dBm	-112.5 dBm	-104.7 dBm
WCDMA B4	-110 dBm	-110 dBm	-112.5 dBm	-106.7 dBm
WCDMA B5	-111 dBm	-111 dBm	-113 dBm	-104.7 dBm
LTE-FDD B2 (10 MHz)	-98 dBm	-99 dBm	-102.2 dBm	-94.3 dBm
LTE-FDD B4 (10 MHz)	-97.8 dBm	-99.5 dBm	-102.2 dBm	-96.3 dBm
LTE-FDD B5 (10 MHz)	-99.6 dBm	-100.3 dBm	-103 dBm	-94.3 dBm
LTE-FDD B12 (10 MHz)	-99.5 dBm	-100 dBm	-102.5 dBm	-93.3 dBm
LTE-FDD B13 (10 MHz)	-99.2 dBm	-100 dBm	-102.5 dBm	-93.3 dBm

Table 46: EG91-NAL Conducted RF Receiving Sensitivity

Frequency Band	Receiving Sensitivity (Typ.)			3GPP (SIMO)
	Primary	Diversity	SIMO	
LTE-FDD B2 (10 MHz)	-98 dBm	-99 dBm	-102.2 dBm	-94.3 dBm
LTE-FDD B4 (10 MHz)	-97.8 dBm	-99.5 dBm	-102.2 dBm	-96.3 dBm
LTE-FDD B5 (10 MHz)	-99.6 dBm	-100.3 dBm	-103 dBm	-94.3 dBm
LTE-FDD B12 (10 MHz)	-99.5 dBm	-100 dBm	-102.5 dBm	-93.3 dBm
LTE-FDD B13 (10 MHz)	-99.2 dBm	-100 dBm	-102.5 dBm	-93.3 dBm

Table 47: EG91-NAX Conducted RF Receiving Sensitivity

Frequency Band	Receiving Sensitivity (Typ.)			3GPP (SIMO)
	Primary	Diversity	SIMO	
WCDMA B2	-110 dBm	-110 dBm	-112.5 dBm	-104.7 dBm
WCDMA B4	-110 dBm	-110 dBm	-112.5 dBm	-106.7 dBm
WCDMA B5	-111 dBm	-111 dBm	-113 dBm	-104.7 dBm
LTE-FDD B2 (10 MHz)	-98 dBm	-99 dBm	-102.2 dBm	-94.3 dBm
LTE-FDD B4 (10 MHz)	-97.8 dBm	-99.5 dBm	-102.2 dBm	-96.3 dBm
LTE-FDD B5 (10 MHz)	-99.4 dBm	-100 dBm	-102.7 dBm	-94.3 dBm
LTE-FDD B12 (10 MHz)	-99.5 dBm	-100 dBm	-102.5 dBm	-93.3 dBm
LTE-FDD B13 (10 MHz)	-99.2 dBm	-100 dBm	-102.5 dBm	-93.3 dBm
LTE-FDD B25 (10 MHz)	-97.6 dBm	-99 dBm	-102.2 dBm	-92.8 dBm
LTE-FDD B26 (10 MHz)	-99.1 dBm	-99.9 dBm	-102.7 dBm	-93.8 dBm

Table 48: EG91-NAXD Conducted RF Receiving Sensitivity

Frequency Band	Receiving Sensitivity (Typ.)			3GPP (SIMO)
	Primary	Diversity	SIMO	
WCDMA B2	-110 dBm	-110 dBm	-112.5 dBm	-104.7 dBm
WCDMA B4	-110 dBm	-110 dBm	-112.5 dBm	-106.7 dBm
WCDMA B5	-111 dBm	-111 dBm	-113 dBm	-104.7 dBm
LTE-FDD B2 (10 MHz)	-98 dBm	-99 dBm	-102.2 dBm	-94.3 dBm
LTE-FDD B4 (10 MHz)	-97.8 dBm	-99.5 dBm	-102.2 dBm	-96.3 dBm
LTE-FDD B5 (10 MHz)	-99.4 dBm	-100 dBm	-102.7 dBm	-94.3 dBm
LTE-FDD B12 (10 MHz)	-99.5 dBm	-100 dBm	-102.5 dBm	-93.3 dBm
LTE-FDD B13 (10 MHz)	-99.2 dBm	-100 dBm	-102.5 dBm	-93.3 dBm

LTE-FDD B25 (10 MHz)	-97.6 dBm	-99 dBm	-102.2 dBm	-92.8 dBm
LTE-FDD B26 (10 MHz)	-99.1 dBm	-99.9 dBm	-102.7 dBm	-93.8 dBm

Table 49: EG91-NAXDL Conducted RF Receiving Sensitivity

Frequency Band	Receiving Sensitivity (Typ.)			3GPP (SIMO)
	Primary	Diversity	SIMO	
LTE-FDD B2 (10 MHz)	-98 dBm	-99 dBm	-102.2 dBm	-94.3 dBm
LTE-FDD B4 (10 MHz)	-97.8 dBm	-99.5 dBm	-102.2 dBm	-96.3 dBm
LTE-FDD B5 (10 MHz)	-99.4 dBm	-100 dBm	-102.7 dBm	-94.3 dBm
LTE-FDD B12 (10 MHz)	-99.5 dBm	-100 dBm	-102.5 dBm	-93.3 dBm
LTE-FDD B13 (10 MHz)	-99.2 dBm	-100 dBm	-102.5 dBm	-93.3 dBm
LTE-FDD B25 (10 MHz)	-97.6 dBm	-99 dBm	-102.2 dBm	-92.8 dBm
LTE-FDD B26 (10 MHz)	-99.1 dBm	-99.9 dBm	-102.7 dBm	-93.8 dBm

Table 50: EG91-VX Conducted RF Receiving Sensitivity

Frequency Band	Receiving Sensitivity (Typ.)			3GPP (SIMO)
	Primary	Diversity	SIMO	
LTE-FDD B4 (10 MHz)	-98.2 dBm	-99.2 dBm	-102.2 dBm	-96.3 dBm
LTE-FDD B13 (10 MHz)	-99.2 dBm	-100 dBm	-102.5 dBm	-93.3 dBm

6.7. Electrostatic Discharge

The module is not protected against electrostatic discharge (ESD) in general. Consequently, it is subject to ESD handling precautions that typically apply to ESD sensitive components. Proper ESD handling and packaging procedures must be applied throughout the processing, handling and operation of any application that incorporates the module.

The following table shows the module's electrostatic discharge characteristics.

Table 51: Electrostatic Discharge Characteristics (Temperature: 25 ºC, Humidity: 45 %)

Tested Interfaces	Contact Discharge	Air Discharge	Unit
VBAT, GND	±5	±10	kV
All Antenna Interfaces	±4	±8	kV
Other Interfaces	±0.5	±1	kV

6.8. Thermal Consideration

In order to achieve better performance of the module, it is recommended to comply with the following principles for thermal consideration:

- On your PCB design, please keep placement of the module away from heating sources, especially high power components such as ARM processor, audio power amplifier, power supply, etc.
- Do not place components on the opposite side of the PCB area where the module is mounted, in order to facilitate adding of heatsink when necessary.
- Do not apply solder mask on the opposite side of the PCB area where the module is mounted, so as to ensure better heat dissipation performance.
- The reference ground of the area where the module is mounted should be complete, and add ground vias as many as possible for better heat dissipation.
- Make sure the ground pads of the module and PCB are fully connected.
- According to your application demands, the heatsink can be mounted on the top of the module, or the opposite side of the PCB area where the module is mounted, or both of them.
- The heatsink should be designed with as many fins as possible to increase heat dissipation area. Meanwhile, a thermal pad with high thermal conductivity should be used between the heatsink and module/PCB.

The following shows two kinds of heatsink designs for reference and you can choose one or both of them according to their application structure.

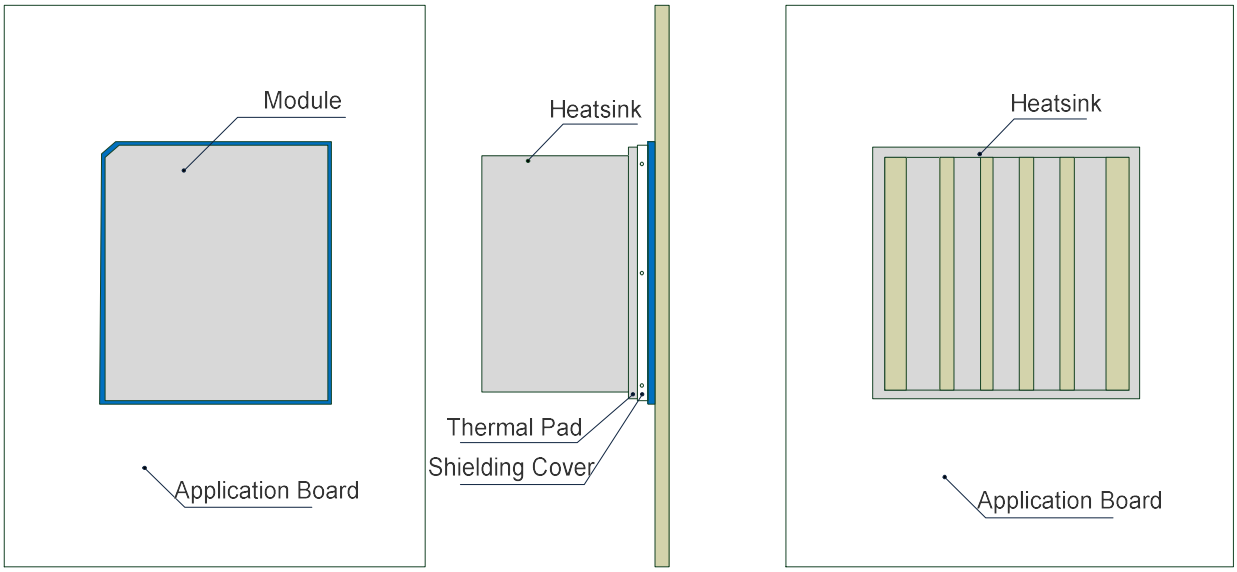

Figure 39: Referenced Heatsink Design (Heatsink at the Top of the Module)

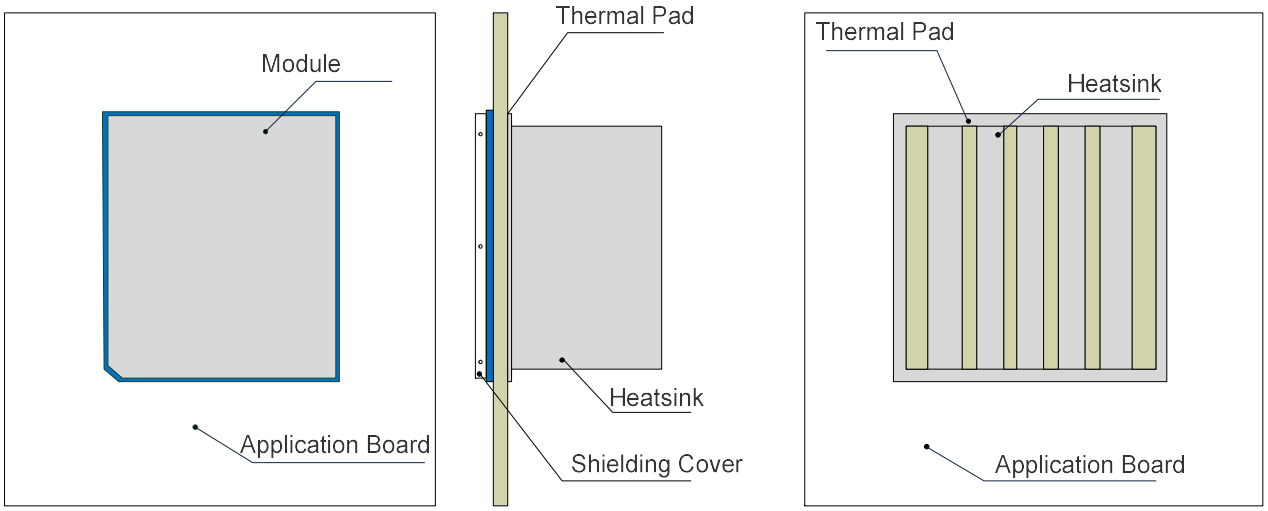

Figure 40: Referenced Heatsink Design (Heatsink at the Backside of Customers' PCB)

NOTE

1. The module offers the best performance when the internal BB chip stays below 105 °C. When the maximum temperature of the BB chip reaches or exceeds 105 °C, the module works normal but provides reduced performance (such as RF output power, data rate, etc.). When the maximum BB chip temperature reaches or exceeds 115 °C, the module will disconnect from the network, and it will recover to network connected state after the maximum temperature falls below 115 °C. Therefore, the thermal design should be maximally optimized to make sure the maximum BB chip temperature always maintains below 105 °C. You can execute **AT+QTEMP** and get the maximum BB chip temperature from the first returned value.

2. For more details about thermal design, see ***document [7]***.

7 Mechanical Dimensions

This chapter describes the mechanical dimensions of the module. All dimensions are measured in millimeter (mm), and the dimensional tolerances are ±0.2 mm unless otherwise specified.

7.1. Mechanical Dimensions of the Module

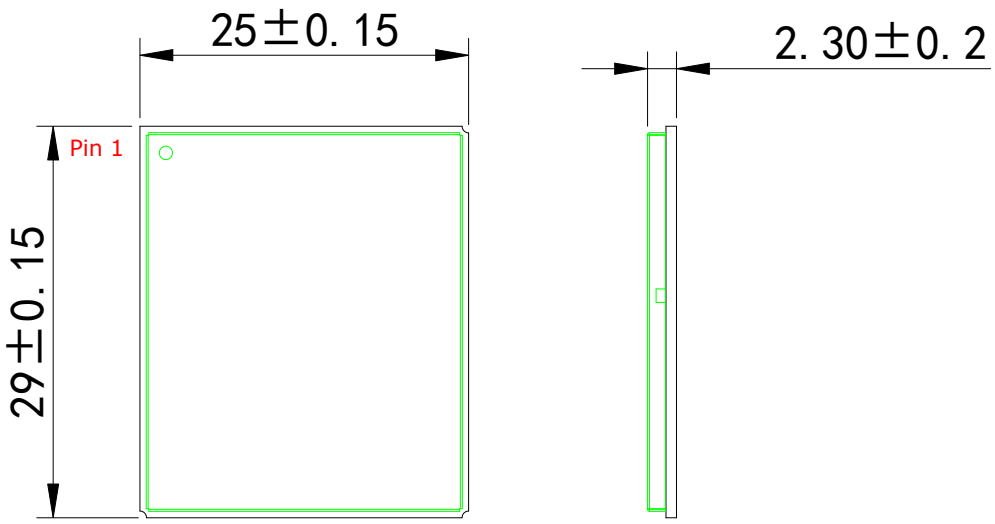

Figure 41: Module Top and Side Dimensions

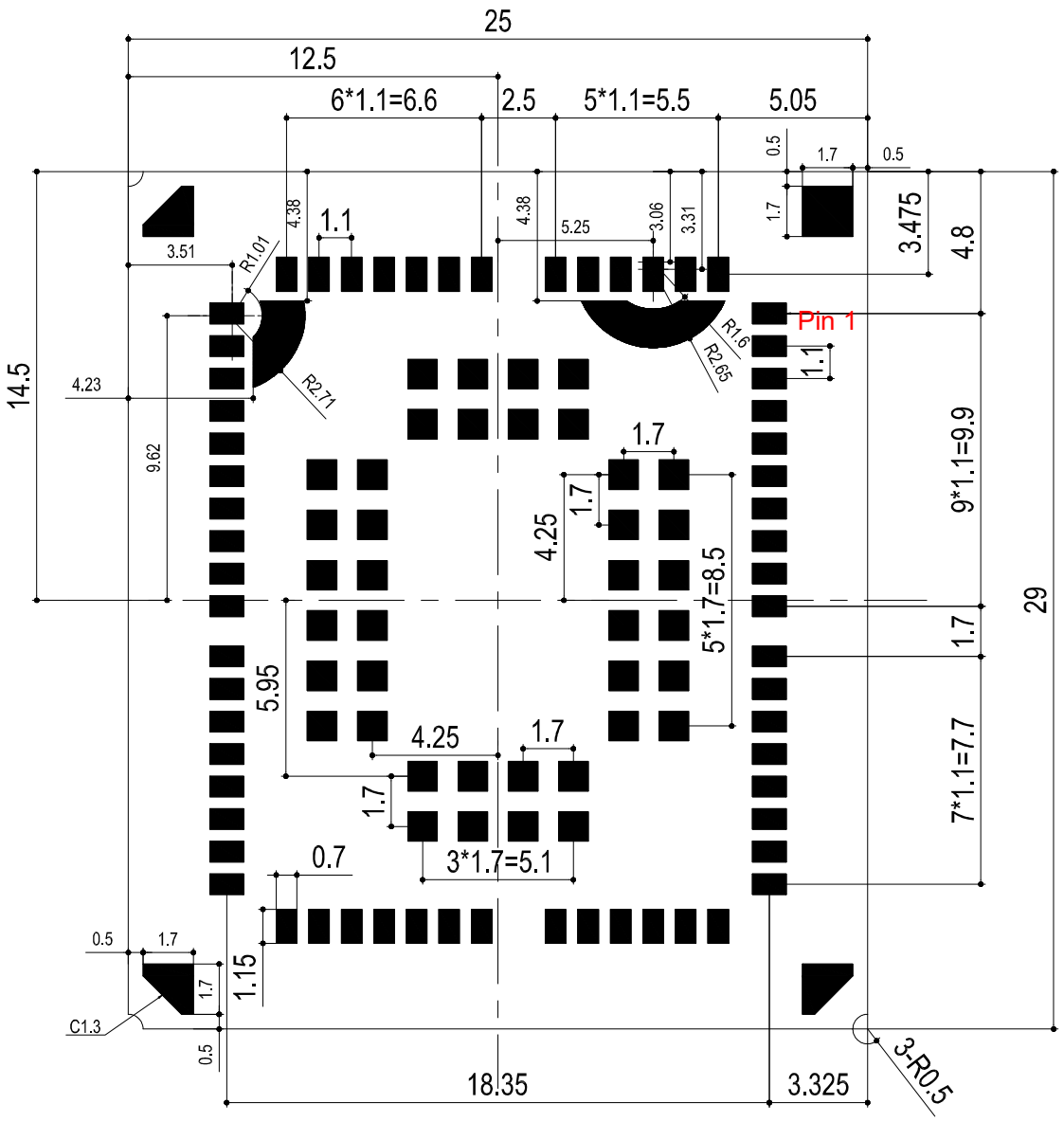

Figure 42: EG91-E Bottom Dimensions (Top View)

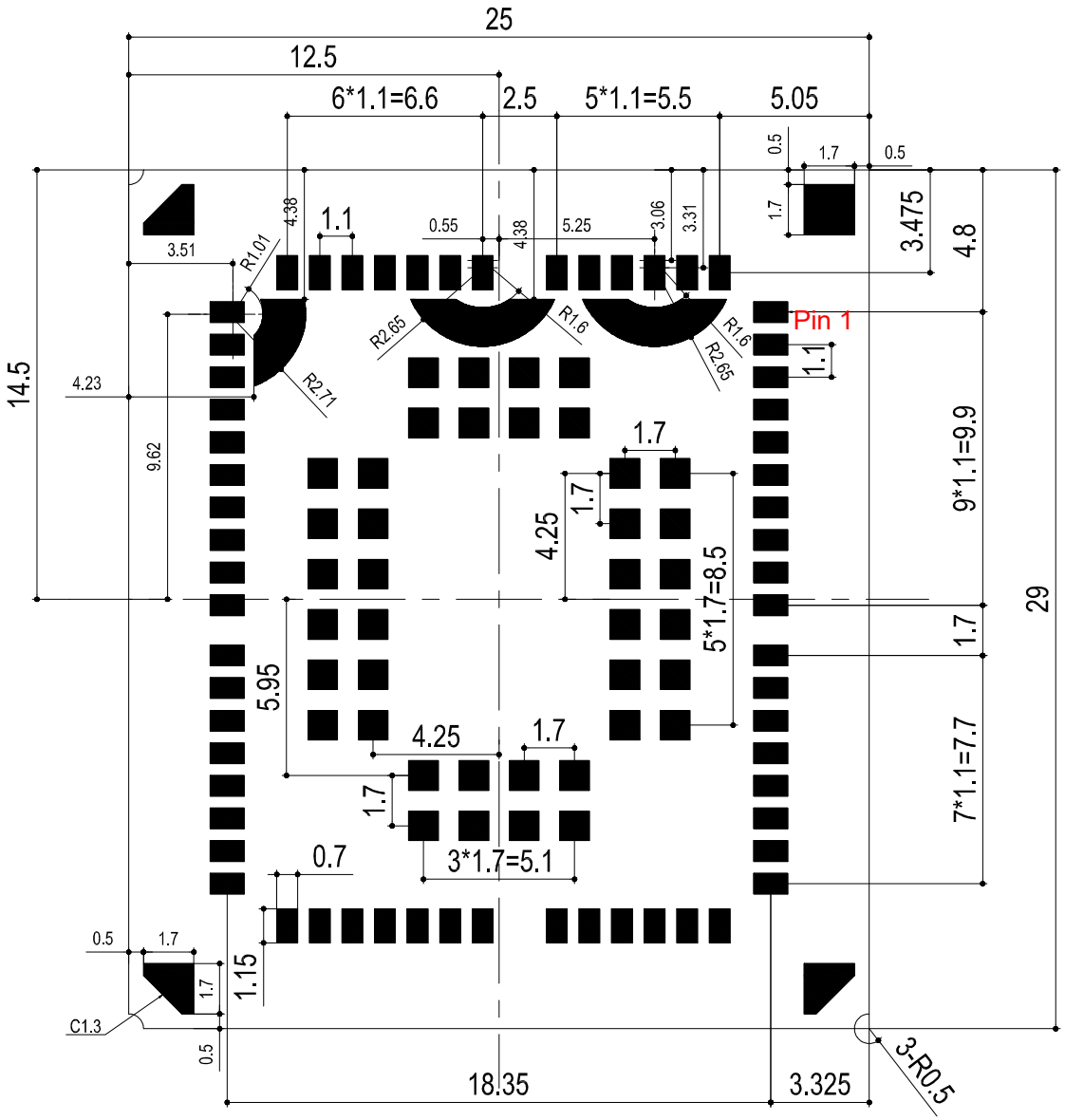

Figure 43: EG91-AUX/-EX/-NA/-NAL/-NAX/-NAXD/-NAXDL/-VX Bottom Dimensions (Top View)

NOTE

The package warpage level of the module conforms to *JEITA ED-7306* standard.

7.2. Recommended Footprint

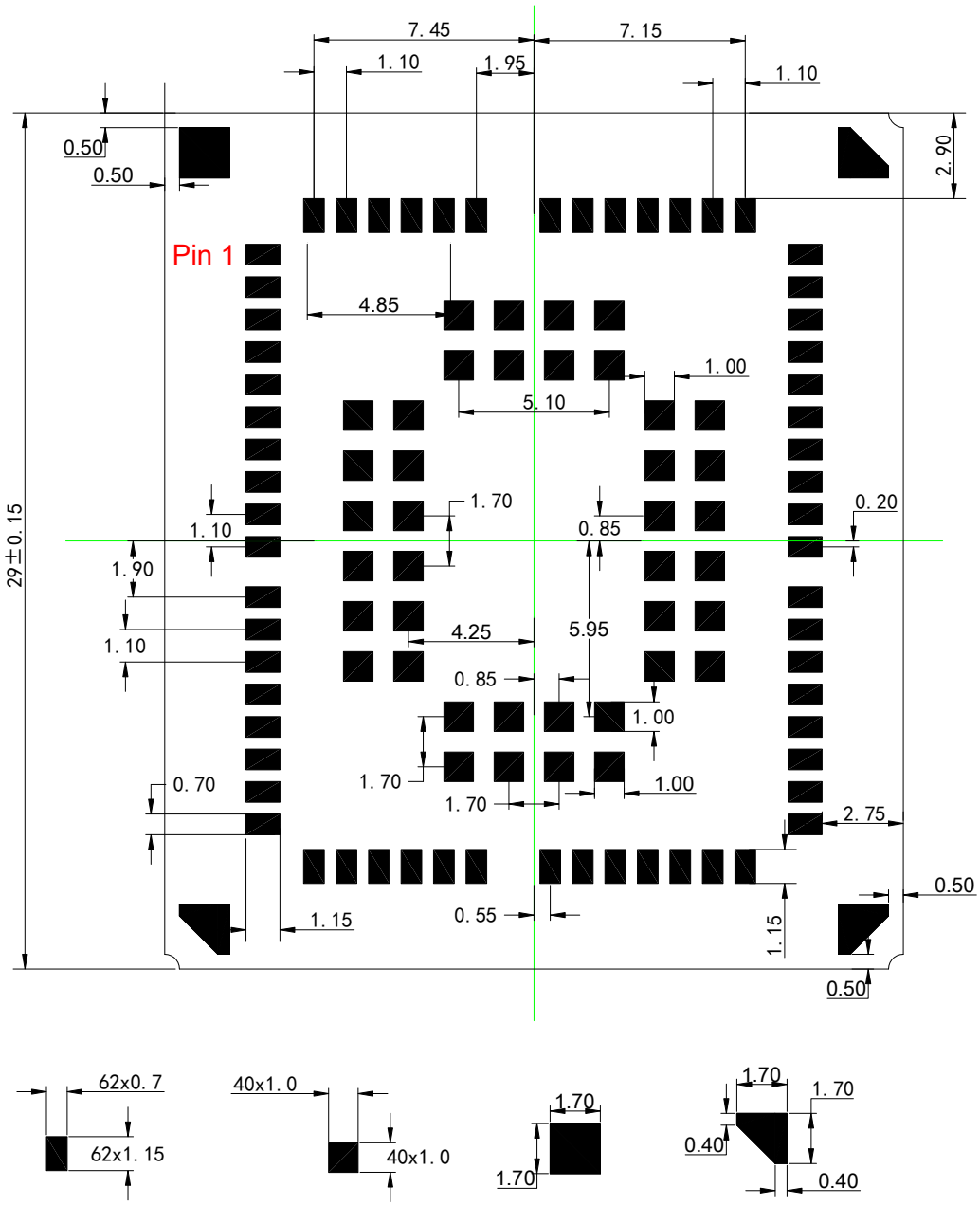

Figure 44: Recommended Footprint (Top View)

NOTE

For easy maintenance of this module, please keep about 3 mm between the module and other components on the motherboard.

7.3. Top and Bottom Views of the Module

Figure 45: Top View of the Module

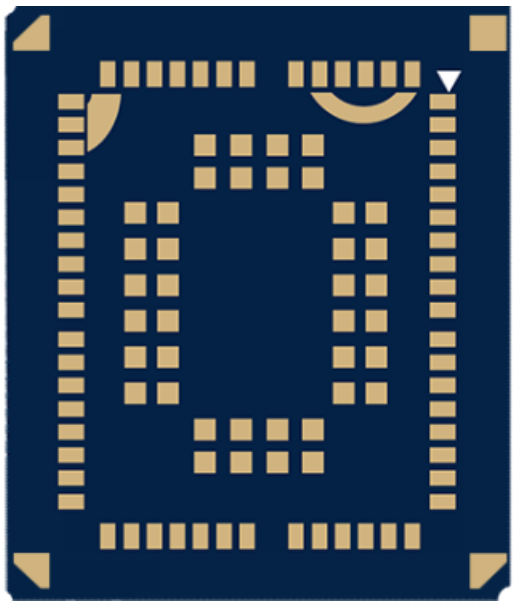

Figure 46: EG91-E Bottom View

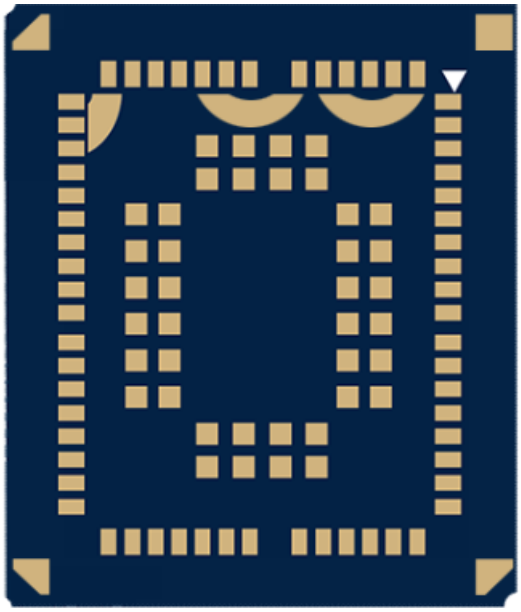

Figure 47: EG91-AUX/-EX/-NA/-NAL/-NAX/-NAXD/-NAXDL/-VX Bottom View

NOTE

Images above are for illustration purpose only and may differ from the actual module. For authentic appearance and label, please refer to the module received from Quectel.

8 Storage, Manufacturing and Packaging

8.1. Storage

The module is provided with vacuum-sealed packaging. MSL of the module is rated as 3. The storage requirements are shown below.

1. Recommended Storage Condition: The temperature should be 23 ±5 °C and the relative humidity should be 35–60 %.

2. The storage life (in vacuum-sealed packaging) is 12 months in Recommended Storage Condition.

3. The floor life of the module is 168 hours [15] in a plant where the temperature is 23 ±5 °C and relative humidity is below 60 %. After the vacuum-sealed packaging is removed, the module must be processed in reflow soldering or other high-temperature operations within 168 hours. Otherwise, the module should be stored in an environment where the relative humidity is less than 10 % (e.g. a drying cabinet).

4. The module should be pre-baked to avoid blistering, cracks and inner-layer separation in PCB under the following circumstances:
   - The module is not stored in Recommended Storage Condition;
   - Violation of the third requirement above occurs;
   - Vacuum-sealed packaging is broken, or the packaging has been removed for over 24 hours;
   - Before module repairing.

5. If needed, the pre-baking should follow the requirements below:
   - The module should be baked for 8 hours at 120 ±5 °C;
   - All modules must be soldered to PCB within 24 hours after the baking, otherwise they should be put in a dry environment such as in a drying oven.

[15] This floor life is only applicable when the environment conforms to IPC/JEDEC J-STD-033. It is recommended to start the solder reflow process within 24 hours after the package is removed if the temperature and moisture do not conform to, or are not sure to conform to IPC/JEDEC J-STD-033. And do not remove the packages of tremendous modules if they are not ready for soldering.

NOTE

1. To avoid blistering, layer separation and other soldering issues, extended exposure of the module to the air is forbidden.
2. Take out the module from the package and put it on high-temperature-resistant fixtures before baking. All modules must be soldered to PCB within 24 hours after the baking, otherwise put them in the drying oven. If shorter baking time is desired, see *IPC/JEDEC J-STD-033* for the baking procedure.
3. Pay attention to ESD protection, such as wearing anti-static gloves, when touching the modules.

8.2. Manufacturing and Soldering

Push the squeegee to apply the solder paste on the surface of stencil, thus making the paste fill the stencil openings and then penetrate to the PCB. The force on the squeegee should be adjusted properly to produce a clean stencil surface on a single pass. To ensure the module soldering quality, the thickness of stencil for the module is recommended to be 0.13–0.15 mm. For more details, see ***document [8]***.

The peak reflow temperature should be 235–246 ºC, with 246 ºC as the absolute maximum reflow temperature. To avoid damage to the module caused by repeated heating, it is strongly recommended that the module should be mounted only after reflow soldering for the other side of PCB has been completed. The recommended reflow soldering thermal profile (lead-free reflow soldering) and related parameters are shown below.

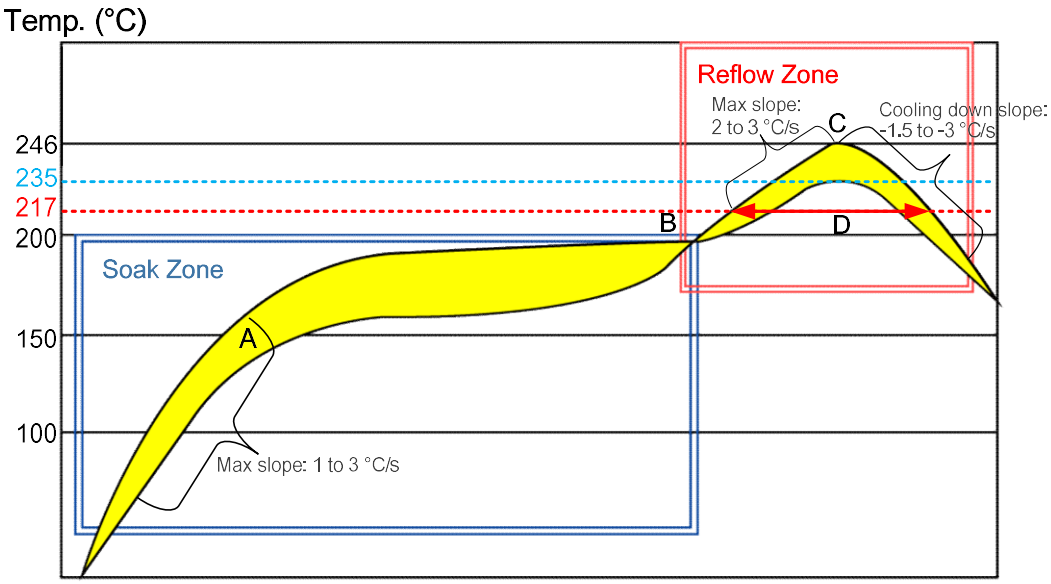

Figure 48: Recommended Reflow Soldering Thermal Profile

Table 52: Recommended Thermal Profile Parameters

Factor	Recommendation
Soak Zone	
Max slope	1–3 °C/s
Soak time (between A and B: 150 °C and 200 °C)	70–120 s
Reflow Zone	
Max slope	2–3 °C/s
Reflow time (D: over 217 °C)	40–70 s
Max temperature	235 °C to 246 °C
Cooling down slope	-1.5 to -3 °C/s
Reflow Cycle	
Max reflow cycle	1

NOTE

1. If a conformal coating is necessary for the module, do NOT use any coating material that may chemically react with the PCB or shielding cover, and prevent the coating material from flowing into the module.
2. Avoid using ultrasonic technology for module cleaning since it can damage crystals inside the module.
3. Due to the complexity of the SMT process, please contact Quectel Technical Supports in advance for any situation that you are not sure about, or any process (e.g. selective soldering, ultrasonic soldering) that is not mentioned in ***document [8]***.

8.3. Packaging

EG91 series module is packaged in a vacuum-sealed bag which is ESD protected. The bag should not be opened until the devices are ready to be soldered onto the application.

The reel is 330 mm in diameter and each reel contains 250 modules. The following figures show the packaging details, measured in mm.

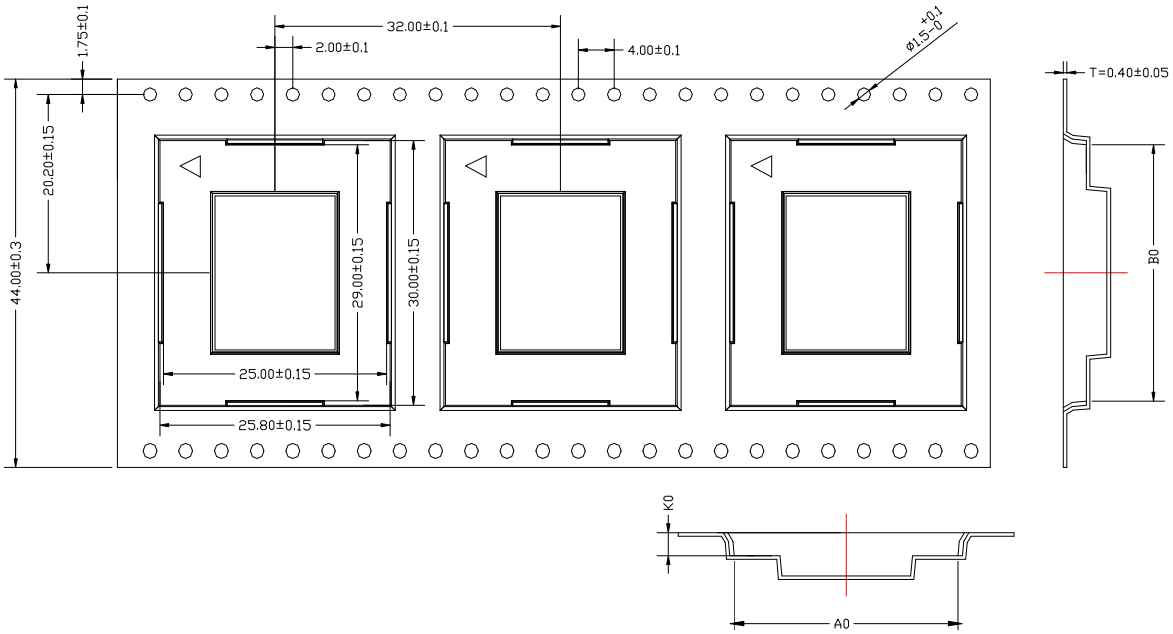

Figure 49: Tape Dimensions

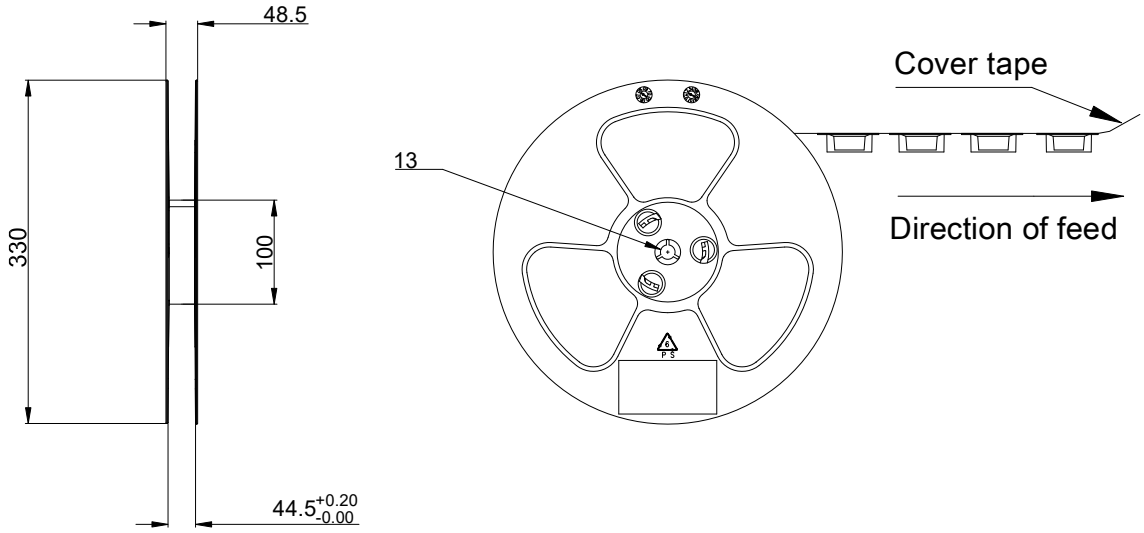

Figure 50: Reel Dimensions

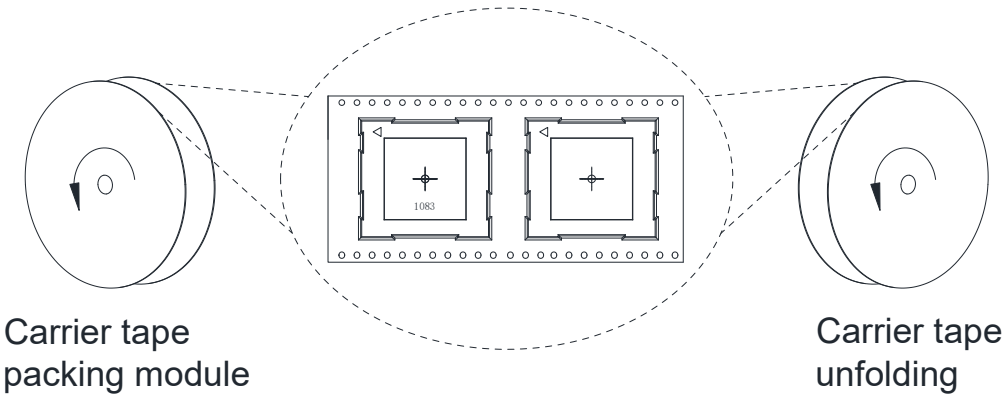

Figure 51: Tape and Reel Directions

9 Appendix References

Table 53: Related Documents

Document Name
[1] Quectel_UMTS&LTE_EVB_User_Guide
[2] Quectel_EC2x&EG9x_Power_Management_Application_Note
[3] Quectel_EG9x_AT_Commands_Manual
[4] Quectel_EC2x&EG9x&EG2x-G&EM05_Series_GNSS_Application_Note
[5] Quectel_EC2x&EG2x&EG9x&EM05_Series_QCFG_AT_Commands_Manual
[6] Quectel_RF_Layout_Application_Note
[7] Quectel_LTE_Module_Thermal_Design_Guide
[8] Quectel_Module_Secondary_SMT_User_Guide

Table 54: Terms and Abbreviations

Abbreviation	Description
ADC	Analog-to-Digital Converter
AMR	Adaptive Multi-rate
bps	Bits Per Second
CHAP	Challenge Handshake Authentication Protocol
CS	Coding Scheme
CSD	Circuit Switched Data
CTS	Clear To Send
DC-HSDPA	Dual-carrier High Speed Downlink Packet Access

DC-HSPA+	Dual-carrier High Speed Packet Access
DCS	Data Coding Scheme
DFOTA	Delta Firmware Upgrade Over-The-Air
DL	Downlink
DTR	Data Terminal Ready
DTX	Discontinuous Transmission
EDGE	Enhanced Data Rates for GSM Evolution
EFR	Enhanced Full Rate
EGSM	Enhanced GSM
ESD	Electrostatic Discharge
FDD	Frequency Division Duplex
FR	Full Rate
FTP	File Transfer Protocol
FTPS	FTP over SSL
GMSK	Gaussian Minimum Shift Keying
GNSS	Global Navigation Satellite System
GPRS	General Packet Radio Service
GSM	Global System for Mobile Communications
HR	Half Rate
HSPA	High Speed Packet Access
HSDPA	High Speed Downlink Packet Access
HSUPA	High Speed Uplink Packet Access
HTTP	Hypertext Transfer Protocol
HTTPS	Hypertext Transfer Protocol Secure
I/O	Input/Output

Inom	Nominal Current
LED	Light Emitting Diode
LGA	Land Grid Array
LNA	Low Noise Amplifier
LTE	Long Term Evolution
M2M	Machine to Machine
ME	Mobile Equipment
MIMO	Multiple Input Multiple Output
MO	Mobile Originated
MMS	Multimedia Messaging Service
MS	Mobile Station (GSM engine)
MCS	Modulation and Coding Scheme
MQTT	Message Queuing Telemetry Transport
MSL	Moisture Sensitivity Level
MT	Mobile Terminated
NITZ	Network Identity and Time Zone
NTP	Network Time Protocol
NMEA	NMEA (National Marine Electronics Association) 0183 Interface Standard
PA	Power Amplifier
PAM	Pulse-Amplitude Modulation
PAP	Password Authentication Protocol
PCB	Printed Circuit Board
PCM	Pulse Code Modulation
PDA	Personal Digital Assistant
PDU	Protocol Data Unit

PING	Packet Internet Groper
PMIC	Power Management IC
POS	Point of Sale
PPP	Point-to-Point Protocol
QAM	Quadrature Amplitude Modulation
QPSK	Quadrature Phase Shift Keying
RF	Radio Frequency
RHCP	Right Hand Circularly Polarized
RoHS	Restriction of Hazardous Substances
RTS	Request to Send
Rx	Receive
SAW	Surface Acoustic Wave
SPI	Serial Peripheral Interface
SMD	Surface Mount Device
SMTP	Simple Mail Transfer Protocol
SMS	Short Message Service
SSL	Secure Sockets Layer
TCP	Transmission Control Protocol
TDD	Time Division Duplexing
TX	Transmitting Direction
UART	Universal Asynchronous Receiver/Transmitter.
UDP	User Datagram Protocol
UL	Uplink
UMTS	Universal Mobile Telecommunications System
URC	Unsolicited Result Code

(U)SIM	(Universal) Subscriber Identity Module
USB	Universal Serial Bus
Vmax	Maximum Voltage
Vnom	Nominal Voltage
Vmin	Minimum Voltage
V_{IH}max	Maximum High-evel Input Voltage
V_{IH}min	Minimum High-evel Input Voltage
V_{IL}max	Maximum I Low-level Input Voltage
V_{IL}min	Minimum Low-level Input Voltage
V_{I}max	Absolute Maximum Input Voltage
V_{I}min	Absolute Minimum Input Voltage
V_{OH}min	Minimum High-level Output Voltage
V_{OL}max	Maximum Low-level Output Voltage
V_{OL}min	Minimum Low-level Output Voltage
VSWR	Voltage Standing Wave Ratio
WCDMA	Wideband Code Division Multiple Access