SC20 Series

Hardware Design

Smart Module Series

Version: 3.0.0

Date: 2021-07-30

Status: Preliminary

Our aim is to provide customers with timely and comprehensive service. For any assistance, please contact our company headquarters:

Quectel Wireless Solutions Co., Ltd.
Building 5, Shanghai Business Park Phase III (Area B), No.1016 Tianlin Road, Minhang District, Shanghai 200233, China
Tel: +86 21 5108 6236
Email: info@quectel.com

Or our local office. For more information, please visit:
http://www.quectel.com/support/sales.htm.

For technical support, or to report documentation errors, please visit:
http://www.quectel.com/support/technical.htm
Or email to support@quectel.com.

General Notes

Quectel offers the information as a service to its customers. The information provided is based upon customers' requirements. Quectel makes every effort to ensure the quality of the information it makes available. Quectel does not make any warranty as to the information contained herein, and does not accept any liability for any injury, loss or damage of any kind incurred by use of or reliance upon the information. All information supplied herein is subject to change without prior notice.

Disclaimer

While Quectel has made efforts to ensure that the functions and features under development are free from errors, it is possible that these functions and features could contain errors, inaccuracies and omissions. Unless otherwise provided by valid agreement, Quectel makes no warranties of any kind, implied or express, with respect to the use of features and functions under development. To the maximum extent permitted by law, Quectel excludes all liability for any loss or damage suffered in connection with the use of the functions and features under development, regardless of whether such loss or damage may have been foreseeable.

Duty of Confidentiality

The Receiving Party shall keep confidential all documentation and information provided by Quectel, except when the specific permission has been granted by Quectel. The Receiving Party shall not access or use Quectel's documentation and information for any purpose except as expressly provided herein. Furthermore, the Receiving Party shall not disclose any of the Quectel's documentation and information to any third party without the prior written consent by Quectel. For any noncompliance to the above requirements, unauthorized use, or other illegal or malicious use of the documentation and information, Quectel will reserve the right to take legal action.

Copyright

The information contained here is proprietary technical information of Quectel. Transmitting, reproducing, disseminating and editing this document as well as using the content without permission are forbidden. Offenders will be held liable for payment of damages. All rights are reserved in the event of a patent grant or registration of a utility model or design.

Copyright © Quectel Wireless Solutions Co., Ltd. 2021. All rights reserved.

Safety Information

The following safety precautions must be observed during all phases of operation, such as usage, service or repair of any cellular terminal or mobile incorporating the module. Manufacturers of the cellular terminal should notify users and operating personnel of the following safety information by incorporating these guidelines into all manuals of the product. Otherwise, Quectel assumes no liability for customers' failure to comply with these precautions.

	Full attention must be paid to driving at all times in order to reduce the risk of an accident. Using a mobile while driving (even with a handsfree kit) causes distraction and can lead to an accident. Please comply with laws and regulations restricting the use of wireless devices while driving.
	Switch off the cellular terminal or mobile before boarding an aircraft. The operation of wireless appliances in an aircraft is forbidden to prevent interference with communication systems. If there is an Airplane Mode, it should be enabled prior to boarding an aircraft. Please consult the airline staff for more restrictions on the use of wireless devices on an aircraft.
	Wireless devices may cause interference on sensitive medical equipment, so please be aware of the restrictions on the use of wireless devices when in hospitals, clinics or other healthcare facilities.
	Cellular terminals or mobiles operating over radio signal and cellular network cannot be guaranteed to connect in certain conditions, such as when the mobile bill is unpaid or the (U)SIM card is invalid. When emergency help is needed in such conditions, use emergency call if the device supports it. In order to make or receive a call, the cellular terminal or mobile must be switched on in a service area with adequate cellular signal strength. In an emergency, the device with emergency call function cannot be used as the only contact method considering network connection cannot be guaranteed under all circumstances.
	The cellular terminal or mobile contains a transceiver. When it is ON, it receives and transmits radio frequency signals. RF interference can occur if it is used close to TV sets, radios, computers or other electric equipment.
	In locations with explosive or potentially explosive atmospheres, obey all posted signs and turn off wireless devices such as mobile phone or other cellular terminals. Areas with explosive or potentially explosive atmospheres include fuelling areas, below decks on boats, fuel or chemical transfer or storage facilities, and areas where the air contains chemicals or particles such as grain, dust or metal powders.

About the Document

Revision History

Version	Date	Author	Description
1.0	2016-04-12	Tony GAO	Initial
1.1	2016-05-04	Mark ZHANG	1. Updated RF Receiving Sensitivity 2. Updated Operation Temperature
1.2	2016-07-22	Sea BAI	Added Chapters 2.4, 3.6–3.22, 4, 5 and 9
1.3	2016-08-19	Sea BAI	Updated Charging Parameters in Table 41
1.4	2017-10-17	Sea BAI/ Beny ZHU/ Jenson WU	1. Modified the name of SC20-CE to SC20-CE R1.1 2. Added the frequency bands of SC20-E, SC20-A, SC20-AU and SC20-J modules (Tables 2, 3, 4 and 5) 3. Added descriptions of Wi-Fi 5GHz frequency band (Tables 27, 28 and 35) 4. Updated SC20 series operating frequencies (Table 33) 5. Updated reference circuit design for GNSS passive antenna (Figure 37) 6. Updated antenna requirements (Table 38) 7. Added the current consumption of SC20-E, SC20-A, SC20-AU and SC20-J (Tables 44, 45, 46 and 47) 8. Updated RF output power (Table 48) 9. Added the RF receiving sensitivity of SC20-E, SC20-A, SC20-AU and SC20-J (Tables 50, 51, 52 and 53)
1.5	2018-09-27	Camphor DUAN/ Ted ZHOU	1. Added the frequency bands of SC20-EU in Table 6. 2. Added a comment for RESET_N in Table 9.

			3. Added the description that the GPIO_68 and GPIO_88 cannot be pulled up during start-up in Table 9 and Chapter 3.14. 4. Updated the turning on timing of the module (Figure 8). 5. Added the description for SPI interface in Chapter 3.14. 6. Added the description that the effective resolution of ADC interfaces is 12 bits in Chapter 3.16. 7. Added the current consumption of SC20-EU in Table 55. 8. Updated the RF receiving sensitivity of SC20-A, SC20-AU and SC20-J in Table 59, 60 and 61. 9. Added the RF receiving sensitivity of SC20-EU in Table 62. 10. Updated the reflow soldering thermal profile and the related parameters in Chapter 9.2.
1.6	2019-01-10	Pat ZHANG	Updated the GNSS sensitivity in Table 33.
2.0	2020-01-19	Arsene TONG	1. Added the information of Linux-version modules SC20-CEL R1.1, SC20-EL, SC20-AL, SC20-AUL and SC20-JL. 2. Deleted SC20-EU and its related information.
2.1	2020-11-13	Arsene TONG/ Ted ZHOU	1. Added SC20-EU and its related information. 2. Updated the operating temperature range in Chapter 2.2/7.4. 3. Updated general description of storage, manufacturing and soldering in Chapter 9.1/9.2.
3.0.0	2021-07-30	Ming CHEN/ Downey YANG/ Kevin ZHOU	Preliminary: 1. Added SC20-AX/EX and the related information. 2. Added the notes of coating and cleaning in Chapter 9.2.

Contents

Safety Information 3
About the Document 4
Contents 6
Table Index 9
Figure Index 11

1 Introduction 13

2 Product Overview 14
2.1. General Description 14
2.2. Key Features 17
2.3. Functional Diagram 20
2.4. EVB 21

3 Application Interfaces 22
3.1. General Description 22
3.2. Pin Assignment 23
3.3. Pin Description 24
3.4. Power Supply 34
3.4.1. Power Supply Pins 34
3.4.2. Voltage Stability Requirements 34
3.4.3. Reference Design for Power Supply 36
3.5. Turn on and off Scenarios 36
3.5.1. Turn on with PWRKEY 36
3.5.2. Turn off 38
3.6. VRTC Interface 39
3.7. Power Output 40
3.8. Battery Charging and Management 40
3.9. USB Interface 42
3.10. UART Interfaces 44
3.11. (U)SIM Interfaces 46
3.12. SD Card Interface 48
3.13. GPIO Interfaces 50
3.14. SPI Interface 52
3.15. I2C Interfaces 53
3.16. ADC Interfaces 54
3.17. Motor Drive Interface 54
3.18. LCM Interface 55
3.19. Touch Panel Interface 58
3.20. Camera Interfaces 59
3.20.1. Rear Camera Interface 59
3.20.2. Front Camera Interface 60
3.20.3. Design Considerations 62

3.21. Sensor Interfaces 63
3.22. Audio Interfaces 64
3.22.1. Reference Circuit Design for Microphone Interface 65
3.22.2. Reference Circuit Design for Earpiece Interface 66
3.22.3. Reference Circuit Design for Headphone Interface 66
3.22.4. Reference Circuit Design for Loudspeaker Interface 67
3.22.5. Audio Interfaces Design Considerations 67
3.23. Emergency Download Interface 68

4 Wi-Fi and Bluetooth 69
4.1. Wi-Fi Overview 69
4.1.1. Wi-Fi Performance 69
4.2. Bluetooth Overview 71
4.2.1. Bluetooth Performance 72

5 GNSS 73
5.1. GNSS Performance 73
5.2. GNSS RF Design Guidelines 74

6 Antenna Interfaces 75
6.1. Main/Rx-diversity Antenna Interfaces 75
6.1.1. Operating Frequency 75
6.1.2. Main and Rx-diversity Antenna Interfaces Reference Design 80
6.2. Wi-Fi/Bluetooth Antenna Interface 80
6.3. GNSS Antenna Interface 81
6.3.1. Recommended Circuit for Passive Antenna 82
6.3.2. Recommended Circuit for Active Antenna 82
6.4. Reference Design for RF Layout 83
6.5. Antenna Installation 85
6.5.1. Antenna Requirements 85
6.5.2. Recommended RF Connector for Antenna Installation 86

7 Reliability, Radio and Electrical Characteristics 89
7.1. Absolute Maximum Ratings 89
7.2. Power Supply Ratings 89
7.3. Charging Performance Specifications 90
7.4. Operating and Storage Temperatures 91
7.5. Power Consumption 91
7.6. Tx Power 114
7.7. Rx Sensitivity 115
7.8. ESD 122

8 Mechanical Information 123
8.1. Mechanical Dimensions 123
8.2. Recommended Footprint 125
8.3. Top and Bottom Views 126

9 Storage, Manufacturing and Packaging 127
9.1. Storage Conditions 127
9.2. Manufacturing and Soldering 128
9.3. Packaging Specification 129

10 Appendix References 131

Table Index

Table 1: SC20-CE R1.1/-CEL R1.1 Frequency Bands 14
Table 2: SC20-E/-EL/-EX Frequency Bands 15
Table 3: SC20-A/-AL/-AX Frequency Bands 15
Table 4: SC20-AU/-AUL Frequency Bands 16
Table 5: SC20-J/-JL Frequency Bands 16
Table 6: SC20-EU Frequency Bands 17
Table 7: Key Features 17
Table 8: I/O Parameters Definition 24
Table 9: Pin Description 24
Table 10: Power Description 40
Table 11: Pin Definition of USB Interface 42
Table 12: USB Trace Length Inside the Module 44
Table 13: Pin Definition of UART Interfaces 44
Table 14: Pin Definition of (U)SIM Interfaces 46
Table 15: Pin Definition of SD Card Interface 48
Table 16: SD Card Trace Length Inside the Module 49
Table 17: Pin Definition of GPIO Interfaces 50
Table 18: Pin Definition of SPI Interface 53
Table 19: Pin Definition of I2C Interfaces 53
Table 20: Pin Definition of ADC Interfaces 54
Table 21: Pin Definition of Motor Drive Interface 55
Table 22: Pin Definition of LCM Interface 55
Table 23: Pin Definition of Touch Panel Interface 58
Table 24: Pin Definition of Rear Camera Interface 59
Table 25: Pin Definition of Front Camera Interface 61
Table 26: MIPI Trace Length Inside the Module 63
Table 27: Pin Definition of Sensor Interfaces 64
Table 28: Pin Definition of Audio Interfaces 64
Table 29: Wi-Fi Transmitting Performance 69
Table 30: Wi-Fi Receiving Performance 70
Table 31: Bluetooth Data Rate and Version 71
Table 32: Bluetooth Transmitting and Receiving Performance 72
Table 33: GNSS Performance 73
Table 34: Pin Definition of Main/Rx-diversity Antenna Interfaces 75
Table 35: SC20-CE R1.1/-CEL R1.1 Operating Frequencies 75
Table 36: SC20-E/-EL/-EX Operating Frequencies 76
Table 37: SC20-A/-AL/-AX Operating Frequencies 77
Table 38: SC20-AU/-AUL Operating Frequencies 78
Table 39: SC20-J/-JL Operating Frequencies 78
Table 40: SC20-EU Module Operating Frequencies 79
Table 41: Pin Definition of Wi-Fi/Bluetooth Antenna Interface 80

Table 42: Wi-Fi/Bluetooth Frequency 80
Table 43: Pin Definition of GNSS Antenna Interface 81
Table 44: GNSS Frequency 82
Table 45: Antenna Requirements 85
Table 46: Absolute Maximum Ratings 89
Table 47: Module Power Supply Ratings 89
Table 48: Charging Performance Specifications 90
Table 49: Operating and Storage Temperatures 91
Table 50: SC20-CE R1.1/-CEL R1.1 Current Consumption 91
Table 51: SC20-E/-EL Current Consumption 93
Table 52: SC20-EX Current Consumption 97
Table 53: SC20-A/-AL Current Consumption 100
Table 54: SC20-AX Current Consumption 103
Table 55: SC20-AU/-AUL Current Consumption 105
Table 56: SC20-J/-JL Current Consumption 109
Table 57: SC20-EU Current Consumption 110
Table 58: RF Output Power 114
Table 59: SC20-CE R1.1/-CEL R1.1 RF Receiving Sensitivity 115
Table 60: SC20-E/-EL RF Receiving Sensitivity 116
Table 61: SC20-EX RF Receiving Sensitivity 117
Table 62: SC20-A/-AL RF Receiving Sensitivity 118
Table 63: SC20-AX RF Receiving Sensitivity 119
Table 64: SC20-AU/-AUL RF Receiving Sensitivity 119
Table 65: SC20-J/-JL RF Receiving Sensitivity 120
Table 66: SC20-EU RF Receiving Sensitivity 121
Table 67: ESD Characteristics (Temperature: 25 ºC, Humidity: 45 %) 122
Table 68: Recommended Thermal Profile Parameters 129
Table 69: Reel Packaging 130
Table 70: Related Documents 131
Table 71: Terms and Abbreviations 131

Figure Index

Figure 1: Functional Diagram 21
Figure 2: Pin Assignment (Top View) 23
Figure 3: Voltage Drop Sample 35
Figure 4: Star Structure of the Power Supply 35
Figure 5: Reference Circuit of Power Supply 36
Figure 6: Turn on the Module Using Driving Circuit 37
Figure 7: Turn on the Module Using Keystroke 37
Figure 8: Timing of Turning on Module 38
Figure 9: Timing of Turning off Module 39
Figure 10: RTC Powered by Coin Cell 39
Figure 11: RTC Powered by Capacitor 39
Figure 12: Reference Design for Battery Charging Circuit 41
Figure 13: USB Interface Reference Design (OTG is not Supported) 43
Figure 14: USB Interface Reference Design (OTG is Supported) 43
Figure 15: Reference Circuit with Level Translator Chip (for UART1) 45
Figure 16: RS-232 Level Match Circuit (for UART1) 45
Figure 17: Reference Circuit for (U)SIM Interface with an 8-pin (U)SIM Card Connector 47
Figure 18: Reference Circuit for (U)SIM Interface with a 6-pin (U)SIM Card Connector 47
Figure 19: Reference Circuit for SD Card Interface 49
Figure 20: Reference Circuit for Motor Connection 55
Figure 21: Reference Circuit Design for LCM Interface 57
Figure 22: Reference Design for External Backlight Driving Circuit 57
Figure 23: Reference Circuit Design for TP Interface 58
Figure 24: Reference Circuit Design for Rear Camera Interface 60
Figure 25: Reference Circuit Design for Front Camera Interface 62
Figure 26: Reference Circuit Design for Microphone Interface 65
Figure 27: Reference Circuit Design for Earpiece Interface 66
Figure 28: Reference Circuit Design for Headphone Interface 66
Figure 29: Reference Circuit Design for Loudspeaker Interface 67
Figure 30: Reference Circuit Design for Emergency Download Interface 68
Figure 31: Reference Circuit Design for Main and Rx-diversity Antenna Interfaces 80
Figure 32: Reference Circuit Design for Wi-Fi/Bluetooth Antenna 81
Figure 33: Reference Circuit Design for GNSS Passive Antenna 82
Figure 34: Reference Circuit Design for GNSS Active Antenna 83
Figure 35: Microstrip Design on a 2-layer PCB 83
Figure 36: Coplanar Waveguide Design on a 2-layer PCB 84
Figure 37: Coplanar Waveguide Design on a 4-layer PCB (Layer 3 as Reference Ground) 84
Figure 38: Coplanar Waveguide Design on a 4-layer PCB (Layer 4 as Reference Ground) 84
Figure 39: Dimensions of the U.FL-R-SMT Connector (Unit: mm) 87
Figure 40: Mechanicals of U.FL-LP Connectors 87
Figure 41: Space Factor of Mated Connectors (Unit: mm) 88

Figure 42: Module Top and Side Dimensions 123
Figure 43: Module Bottom Dimensions (Top View) 124
Figure 44: Recommended Footprint (Top View) 125
Figure 45: Top and Bottom Views of the Module 126
Figure 46: Recommended Reflow Soldering Thermal Profile 128
Figure 47: Tape Dimensions 130
Figure 48: Reel Dimensions 130

1 Introduction

This document defines SC20 series module and its air interfaces and hardware interfaces which are related to your application.

This document helps you quickly understand module interface specifications, electrical and mechanical details as well as other related information of the module. Associated with application notes and user guides, you can use the module to design and set up mobile applications easily.

Hereby, [Quectel Wireless Solutions Co., Ltd.] declares that the radio equipment type [SC20-E/SC20-EL/SC20-EX] is in compliance with Directive 2014/53/EU. As well as the UK Radio Equipment Regulations SI 2017 No. 1206. The full text of the EU/UK declaration of conformity is available at the following internet address: http://www.quectel.com/support/technical.htm

The device could be used with a separation distance of 20cm to the human body.

The device is restricted to indoor use only when operating in the 5150 to 5350 MHz frequency range.

	AT	BE	BG	HR	CY	CZ	DK
	EE	FI	FR	DE	EL	HU	IE
	IT	LV	LT	LU	MT	NL	PL
	PT	RO	SK	SI	ES	SE	UK
							UK(NI)

2 Product Overview

2.1. General Description

SC20 is a series of Smart LTE modules based on Android/Linux operating systems, which provide industrial grade performance. Its general features are listed below:

- Supports worldwide LTE-FDD, LTE-TDD, DC-HSDPA, HSPA+, HSDPA, HSUPA, WCDMA, TD-SCDMA, EVDO/CDMA, EDGE and GPRS coverage.
- Supports short-range wireless communication via Wi-Fi 802.11a/b/g/n and Bluetooth 4.2 LE.
- Integrates GPS/BeiDou/GLONASS or GPS/BeiDou/Galileo satellite positioning systems.
- Supports multiple audio and video codecs.
- Integrates built-in high performance Adreno™ 304 graphics processing unit.
- Enables smooth play of 720P videos.
- Provides multiple audio and video input/output interfaces as well as abundant GPIO interfaces.

SC20 series is composed of Android version and Linux version.

- Android version includes SC20-CE R1.1, SC20-E, SC20-A, SC20-AU, SC20-J, SC20-EU.
- Linux version includes SC20-CEL R1.1, SC20-EL, SC20-AL, SC20-AUL, SC20-JL, SC20-AX, SC20-EX.

The following tables show the supported frequency bands and network standards of SC20 series.

Table 1: SC20-CE R1.1/-CEL R1.1 Frequency Bands

Mode	Frequency
LTE-FDD	B1/B3/B5/B8
LTE-TDD	B38/B39/B40/B41
WCDMA	B1/B8
TD-SCDMA	B34/B39
EVDO/CDMA	BC0

GSM	900/1800 MHz
Wi-Fi 802.11a/b/g/n	2400–2482 MHz 5180–5825 MHz
Bluetooth	2402–2480 MHz
GNSS	GPS/Galileo: 1575.42 ±1.023 MHz GLONASS: 1597.5–1605.8 MHz BeiDou: 1561.098 ±2.046 MHz

Table 2: SC20-E/-EL/-EX Frequency Bands

Mode	Frequency
LTE-FDD	B1/B3/B5/B7/B8/B20
LTE-TDD	B38/B40/B41
WCDMA	B1/B5/B8
GSM	850/900/1800/1900 MHz
Wi-Fi 802.11a/b/g/n	2400–2482 MHz 5180–5825 MHz
Bluetooth 4.2 LE	2402–2480 MHz
GNSS	GPS: 1575.42 ±1.023 MHz GLONASS: 1597.5–1605.8 MHz BeiDou: 1561.098 ±2.046 MHz

Table 3: SC20-A/-AL/-AX Frequency Bands

Mode	Frequency
LTE-FDD	B2/B4/B5/B7/B12/B13/B25/B26
WCDMA	B1/B2/B4/B5/B8
GSM	850/1900 MHz
Wi-Fi 802.11a/b/g/n	2400–2482 MHz 5180–5825 MHz
Bluetooth 4.2 LE	2402–2480 MHz
GNSS	GPS: 1575.42 ±1.023 MHz GLONASS: 1597.5–1605.8 MHz

	BeiDou: 1561.098 ±2.046 MHz

Table 4: SC20-AU/-AUL Frequency Bands

Mode	Frequency
LTE-FDD	B1/B3/B5/B7/B8/B28
LTE-TDD	B40
WCDMA	B1/B2/B5/B8
GSM	850/900/1800/1900 MHz
Wi-Fi 802.11a/b/g/n	2400–2482 MHz 5180–5825 MHz
Bluetooth 4.2 LE	2402–2480 MHz
GNSS	GPS/Galileo: 1575.42 ±1.023 MHz GLONASS: 1597.5–1605.8 MHz BeiDou: 1561.098 ±2.046 MHz

Table 5: SC20-J/-JL Frequency Bands

Mode	Frequency
LTE-FDD	B1/B3/B8/B18/B19/B26
LTE-TDD	B41
WCDMA	B1/B6/B8/B19
Wi-Fi 802.11a/b/g/n	2400–2496 MHz 5180–5825 MHz
Bluetooth 4.2 LE	2402–2480 MHz
GNSS	GPS/Galileo: 1575.42 ±1.023 MHz GLONASS: 1597.5–1605.8 MHz BeiDou: 1561.098 ±2.046 MHz

Table 6: SC20-EU Frequency Bands

Type	Frequency
LTE-FDD	B1/B2/B3/B5/B7/B8/B20/B28A
LTE-TDD	B38
WCDMA	B1/B2/B5/B8
GSM	850/900/1800/1900 MHz
Wi-Fi 802.11a/b/g/n	2400–2482 MHz 5180–5825 MHz
Bluetooth 4.2 LE	2402–2480 MHz
GNSS	GPS/Galileo: 1575.42 ±1.023 MHz GLONASS: 1597.5–1605.8 MHz BeiDou: 1561.098 ±2.046 MHz

SC20 is a series of SMD type modules, which can be embedded into applications through its 210-pin pads including 146 LCC pads and 64 LGA pads. With a compact profile of 40.5 mm × 40.5 mm × 2.8 mm, SC20 series can meet almost all requirements for M2M applications such as CPE, wireless POS, smart metering, router, data card, automotive, smart phone, digital signage, alarm panel, security and industry PDA, etc.

2.2. Key Features

The following table describes the detailed features of the module.

Table 7: Key Features

Feature	Details
Application Processor	ARM Cortex-A7 microprocessor cores (quad-core) up to 1.1 GHz 512 KB L2 cache
Modem DSP	QDSP6 v5 core up to 691.2 MHz 768 KB L2 cache

Memory	**SC20-CE R1.1/-CEL R1.1, SC20-E/-EL, SC20-A/-AL, SC20-AU/-AUL, SC20-J/-JL, SC20-EU:** 8 GB eMMC + 1 GB LPDDR3 (default) 16 GB eMMC + 2 GB LPDDR3 (optional) **SC20-AX, SC20-EX:** 4 Gb NAND + 4 Gb LPDDR2
Operating System	Android/Linux
Power Supply	Supply voltage: 3.5–4.2 V Typical supply voltage: 3.8 V
Transmitting Power	Class 4 (33 dBm ±2 dB) for GSM850 and EGSM900 Class 1 (30 dBm ±2 dB) for DCS1800 and PCS1900 Class E2 (27 dBm ±3 dB) for GSM850 and EGSM900 8-PSK Class E2 (26 dBm ±3 dB) for DCS1800 and PCS1900 8-PSK Class 3 (24 dBm +1/-3 dB) for WCDMA bands Class 3 (24 dBm +3/-1 dB) for EVDO/CDMA BC0 Class 2 (24 dBm +1/-3 dB) for TD-SCDMA bands Class 3 (23 dBm ±2 dB) for LTE-FDD bands Class 3 (23 dBm ±2 dB) for LTE-TDD bands
LTE Features	Supports 3GPP R10 Cat 4 FDD and TDD Supports 1.4/3/5/10/20 MHz RF bandwidth Supports DL 2 × 2 MIMO ● FDD: Max. 150 Mbps (DL)/Max. 50 Mbps (UL) ● TDD: Max. 130 Mbps (DL)/Max. 30 Mbps (UL)
UMTS Features	Supports 3GPP R8 DC-HSDPA/HSPA+/HSDPA/HSUPA/WCDMA Supports 16QAM, 64QAM and QPSK modulation ● DC-HSDPA: Max. 42 Mbps ● HSUPA: Max. 5.76 Mbps ● WCDMA: Max. 384 kbps (DL)/Max. 384 kbps (UL)
TD-SCDMA Features	Supports CCSA Release 3 TD-SCDMA ● Max. 4.2 Mbps (DL)/Max. 2.2 Mbps (UL)
CDMA2000 Features	Supports 3GPP2 CDMA2000 1X Advanced, CDMA2000 1xEV-DO Rev.A ● EVDO: Max. 3.1 Mbps (DL)/Max. 1.8 Mbps (UL) ● 1X Advanced: Max. 307.2 kbps (DL)/Max. 307.2 kbps (UL)
GSM Features	**R99:** CSD: 9.6 kbps, 14.4 kbps **GPRS:** Supports GPRS multi-slot class 33 (33 by default) Coding scheme: CS-1, CS-2, CS-3 and CS-4 Max. 107 kbps (DL)/Max. 85.6 kbps (UL) **EDGE:** Supports EDGE multi-slot class 33 (33 by default) Support GMSK and 8-PSK for different MCS

	Downlink coding schemes: MCS 1–9 Uplink coding schemes: MCS 1–9 Max. 296 kbps (DL)/Max. 236.8 kbps (UL)
WLAN Features	Supports 2.4 GHz and 5 GHz frequency bands Supports 802.11a/b/g/n, maximally up to 150 Mbps Supports AP and STA modes
Bluetooth Feature	Bluetooth 4.2 LE
GNSS Features	GPS/BeiDou/GLONASS or GPS/BeiDou/Galileo
SMS	Text and PDU mode Point-to-point MO and MT SMS cell broadcast SMS storage: ME by default
LCM Interface	Supports one 4-lane MIPI_DSI, up to 1.5 Gbps/lane Supports WVGA (2-lane MIPI_DSI), up to 720P (4-lane MIPI_DSI) 24-bit color depth
Camera Interfaces	Supports two MIPI_CSI (2-lane + 1-lane), up to 1.5 Gbps/lane Supports two cameras: 2-lane MIPI_CSI for rear camera, maximum pixel up to 8 MP 1-lane MIPI_CSI for front camera, maximum pixel up to 2 MP
Video Codec	**Video encoding:** 720P (H.264) @ 30 fps; WVGA (MPEG-4/VP8) @ 30 fps **Video decoding:** 1080P (H.264/MPEG-4/VP8/H.265/DivX4/5/6) @ 30 fps; WVGA (H.263) @ 30 fps
Audio Interfaces	**Audio inputs:** Two analog microphone inputs, integrating internal bias voltage **Audio outputs:** Class AB stereo headphone output Class AB earpiece differential output Class D speaker differential amplifier output
Audio Codec	HR, FR, EFR, AMR, AMR-WB
USB Interface	Compliant with USB 2.0 specification Supports up to 480 Mbps Supports USB OTG (an external 5 V power supply is needed) Used for AT command communication, data transmission, software debugging and firmware upgrade
(U)SIM Interfaces	Two (U)SIM interfaces Supports USIM/SIM card: 1.8 V or 2.95 V Supports Dual SIM Dual Standby (supported by default)
UART Interfaces	Two UART interfaces: UART1 and UART2 ● UART1: 4-wire UART interface with RTS/CTS hardware flow control;

	baud rate up to 4 Mbps ● UART2: 2-wire UART interface used for debugging
Motor Drive Interface	Drives ERM motor
SD Card Interface	Supports SD 3.0, 4-bit SDIO Supports SD card hot-plug
I2C Interfaces	Three I2C interfaces Used for peripherals such as camera, sensor, touch panel, etc.
ADC Interfaces	Three ADC interfaces Used for battery voltage detection, battery temperature detection and general-purpose ADC
Real Time Clock	Supported
Antenna Interfaces	Main antenna, Rx-diversity antenna, GNSS antenna and Wi-Fi/Bluetooth antenna
Physical Characteristics	Size: (40.5 ±0.15) mm × (40.5 ±0.15) mm × (2.8 ±0.2) mm Package: LCC + LGA Weight: approx. 9.8 g
Temperature Range	Operating temperature range: -35 to +75 °C [1] Storage temperature range: -40 to +90 °C
Firmware Upgrade	Over USB interface
RoHS	All hardware components are fully compliant with EU RoHS directive

2.3. Functional Diagram

The following figure shows a block diagram of SC20 series and illustrates the major functional parts.

- Power management
- Radio frequency
- Baseband
- LPDDR3 + eMMC flash (SC20-CE R1.1/-CEL R1.1, SC20-E/-EL, SC20-A/-AL, SC20-AU/-AUL, SC20-J/-JL, SC20-EU)
- LPDDR2 + NAND flash (SC20-AX, SC20-EX)
- Peripheral interfaces
  -- USB interface
  -- UART interfaces
  -- (U)SIM interfaces
  -- SD card interface
  -- GPIO interfaces

[1] Within the operating temperature range, the module is 3GPP compliant.

-- I2C interfaces
-- ADC interfaces
-- LCM (MIPI) interface
-- Touch panel (TP) interface
-- Camera (MIPI) interfaces
-- Audio interfaces

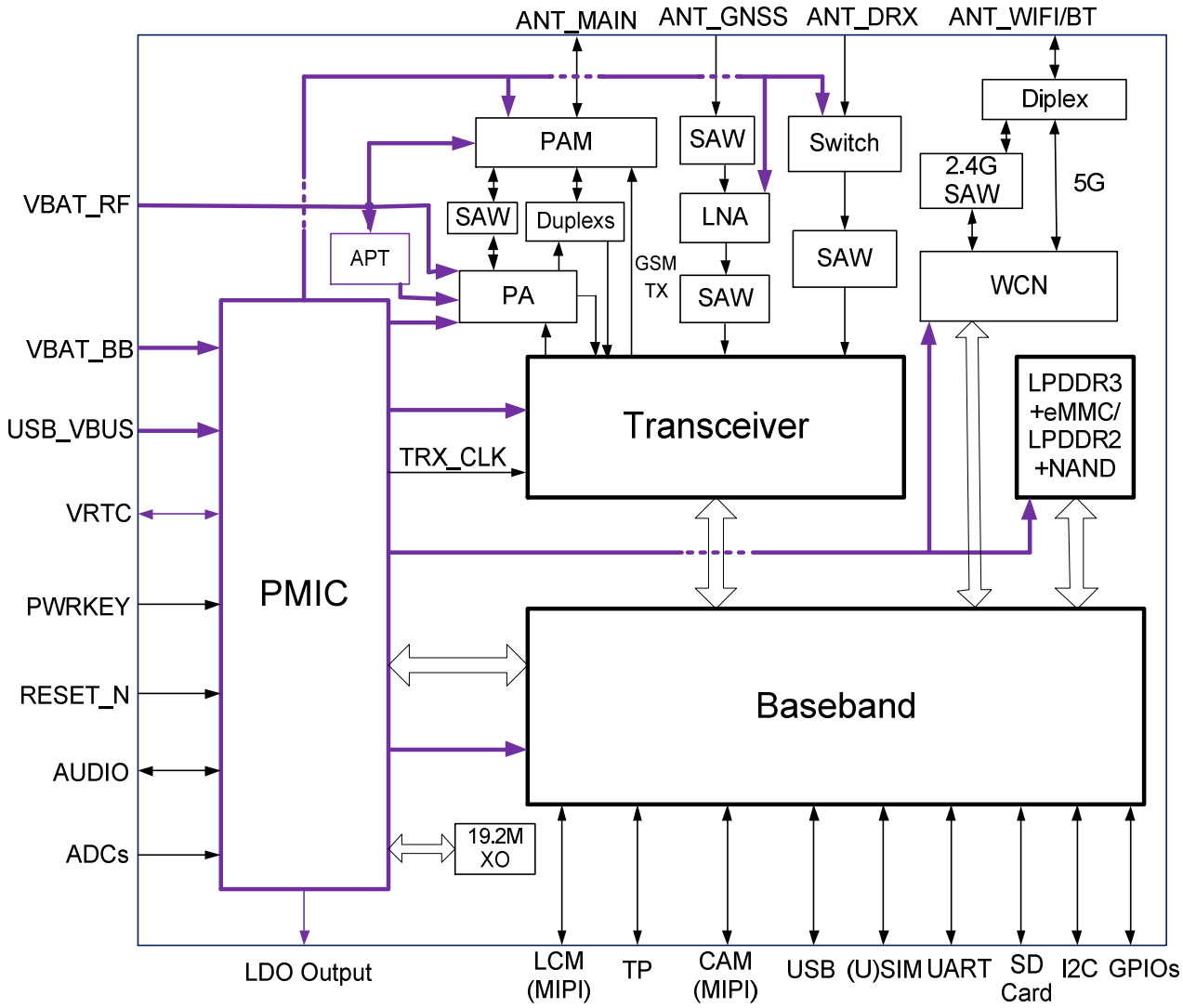

Figure 1: Functional Diagram

2.4. EVB

To help you develop applications with the module, Quectel supplies the evaluation board (Smart EVB), USB to RS-232 converter cable, USB data cable, power adapter, earphone, antenna and other peripherals to control or test the module. For more details, see ***document [1]***.

3 Application Interfaces

3.1. General Description

SC20 is a series of SMD type modules with 146 LCC pads and 64 LGA pads. The following chapters provide the detailed description of pins/interfaces listed below.

- Power supply
- VRTC interface
- USB interface
- UART interfaces
- (U)SIM interfaces
- SD card interface
- GPIO interfaces
- SPI interface
- I2C interfaces
- ADC interfaces
- Motor drive interface
- LCM interface
- Touch panel interface
- Camera interfaces
- Sensor interfaces
- Audio interfaces
- Emergency download interface

3.2. Pin Assignment

The following figure shows the pin assignment of SC20 series.

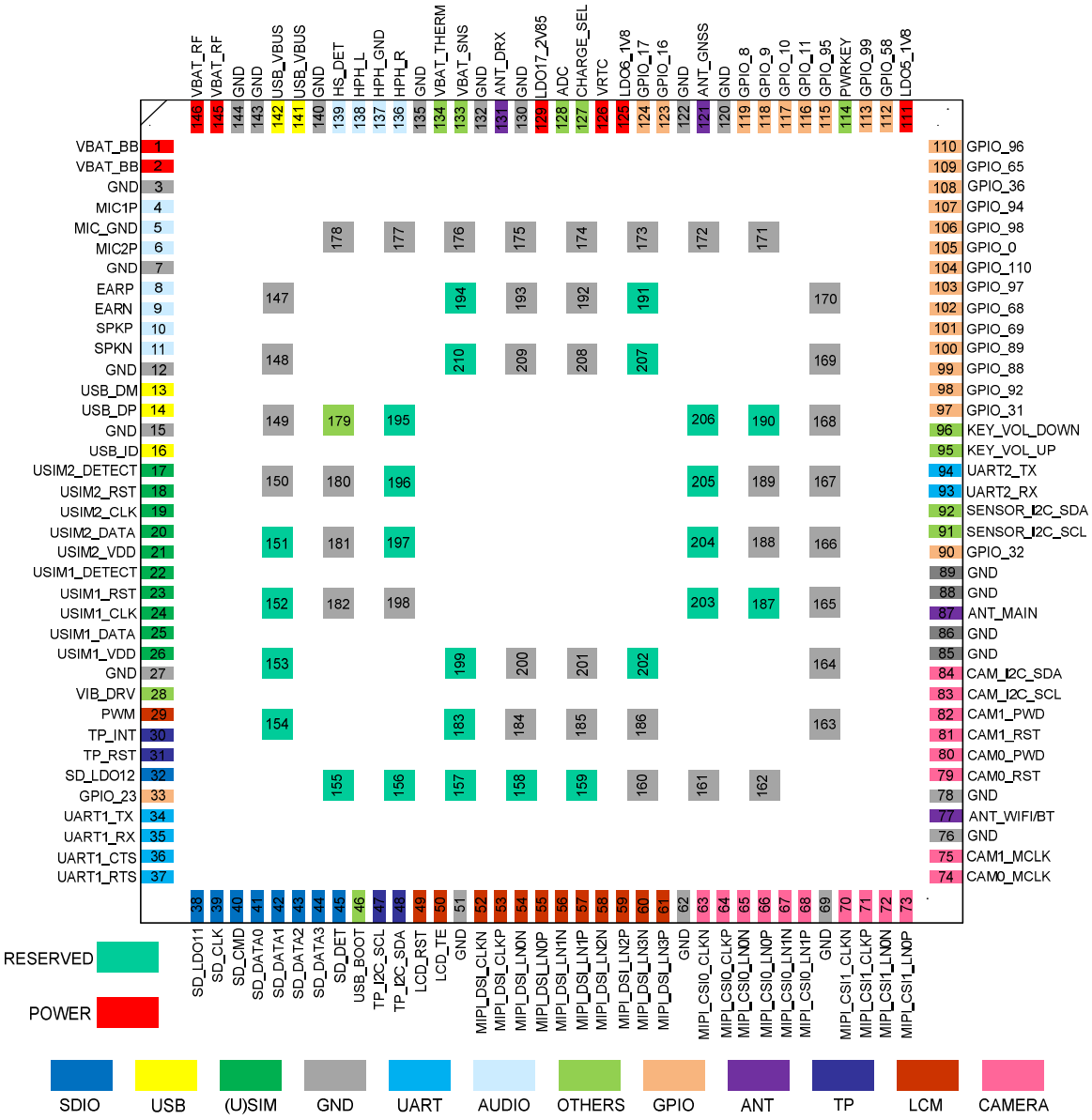

Figure 2: Pin Assignment (Top View)

NOTE

As for SC20-AX/EX, pins 105, 116, 117, 118, 119 are GPIO_15, GPIO_3, GPIO_2, GPIO_1 and GPIO_0 respectively.

3.3. Pin Description

Table 8: I/O Parameters Definition

Type	Description
AI	Analog Input
AO	Analog Output
AIO	Analog Input/Output
DI	Digital Input
DO	Digital Output
DIO	Digital Input/Output
OD	Open drain
PI	Power Input
PO	Power Output
PIO	Power Input/Output

The following table shows the pin definition and electrical characteristics of SC20 series.

Table 9: Pin Description

Power Supply					
Pin Name	**Pin No.**	**I/O**	**Description**	**DC Characteristics**	**Comment**
VBAT_BB	1, 2	PI	Power supply for module's baseband part	Vmax = 4.2 V Vmin = 3.5 V Vnom = 3.8 V	You must provide them with sufficient current of up to 3.0 A. It is suggested to add a TVS for surge protection.
VBAT_RF	145, 146	PI	Power supply for module's RF part	Vmax = 4.2 V Vmin = 3.5 V Vnom = 3.8 V	
VRTC	126	PIO	Power supply for internal RTC circuit	$V_O$max = 3.2 V V_I = 2.0–3.25 V	If unused, keep this pin open.

LDO5_1V8	111	PO	1.8 V output	Vnom = 1.8 V $I_O$max = 20 mA	Power supply for external GPIO's pull-up and level shift circuits.
LDO6_1V8	125	PO	1.8 V output	Vnom = 1.8 V $I_O$max = 100 mA	Power supply for peripherals. If it is used, connect an external 2.2–4.7 μF capacitor to this pin in parallel. If it is not used, keep it open.
LDO17_2V85	129	PO	2.85 V output	Vnom = 2.85 V $I_O$max = 300 mA	Power supply for peripherals. If it is used, connect an external 2.2–4.7 μF capacitor to this pin in parallel. If it is not used, keep it open.
GND					
Pin Name	**Pin No.**				
GND	3, 7, 12, 15, 27, 51, 62, 69, 76, 78, 85, 86, 88, 89, 120, 122, 130, 132, 135, 140, 143, 144, 147–150, 160–178, 180–182, 184–186, 188, 189, 192, 193, 198, 200, 201, 208, 209				
Audio Interfaces					
Pin Name	**Pin No.**	**I/O**	**Description**	**DC Characteristics**	**Comment**
MIC1P	4	AI	Microphone input for channel 1 (+)		
MIC_GND	5		Microphone reference ground		
MIC2P	6	AI	Microphone input for headset (+)		
EARP	8	AO	Earpiece output (+)		
EARN	9	AO	Earpiece output (-)		

SPKP	10	AO	Speaker output (+)		
SPKN	11	AO	Speaker output (-)		
HPH_R	136	AO	Headphone right channel output		
HPH_GND	137	AI	Headphone reference ground		
HPH_L	138	AO	Headphone left channel output		
HS_DET	139	AI	Headset hot-plug detect		High level by default.
USB Interface					
Pin Name	**Pin No.**	**I/O**	**Description**	**DC Characteristics**	**Comment**
USB_VBUS	141, 142	PI	USB 5 V power input and USB insertion detection	Vmax = 6.3 V Vmin = 4.35 V Vnom = 5.0 V	
USB_DM	13	AIO	USB 2.0 differential data (-)		Compliant with USB 2.0 standard. Require differential impedance of 90 Ω.
USB_DP	14	AIO	USB 2.0 differential data (+)		
USB_ID	16	AI	USB ID detect		High level by default.
(U)SIM Interfaces					
Pin Name	**Pin No.**	**I/O**	**Description**	**DC Characteristics**	**Comment**
USIM2_DETECT	17	DI	(U)SIM2 card hot-plug detect	V_{IL}max = 0.63 V V_{IH}min = 1.17 V	Active low. Externally pull it up to 1.8 V. If unused, keep this pin open.
USIM2_RST	18	DO	(U)SIM2 card reset	V_{OL}max = 0.4 V V_{OH}min = 0.8 × USIM2_VDD	
USIM2_CLK	19	DO	(U)SIM2 card clock		

USIM2_DATA	20	DIO	(U)SIM2 card data	V_{IL}max = 0.2 × USIM2_VDD V_{IH}min = 0.7 × USIM2_VDD V_{OL}max = 0.4 V V_{OH}min = 0.8 × USIM2_VDD	Externally pull it up to USIM2_VDD with a 10 kΩ resistor.
USIM2_VDD	21	PO	(U)SIM2 card power supply	**For 1.8 V (U)SIM:** Vmax = 1.85 V Vmin = 1.75 V **For 2.95 V (U)SIM:** Vmax = 3.1V Vmin = 2.8 V	Either 1.8 V or 2.95 V (U)SIM card is supported by the module automatically.
USIM1_DETECT	22	DI	(U)SIM1 card hot-plug detect	V_{IL}max = 0.63 V V_{IH}min = 1.17 V	Active low. Externally pull it up to 1.8 V. If unused, keep this pin open.
USIM1_RST	23	DO	(U)SIM1 card reset	V_{OL}max = 0.4 V V_{OH}min = 0.8 × USIM1_VDD	
USIM1_CLK	24	DO	(U)SIM1 card clock		
USIM1_DATA	25	DIO	(U)SIM1 card data	V_{IL}max = 0.2 × USIM1_VDD V_{IH}min = 0.7 × USIM1_VDD V_{OL}max = 0.4 V V_{OH}min = 0.8 × USIM1_VDD	Externally pull it up to USIM1_VDD with a 10 kΩ resistor.
USIM1_VDD	26	PO	(U)SIM1 card power supply	**For 1.8 V (U)SIM:** Vmax = 1.85 V Vmin = 1.75 V **For 2.95 V (U)SIM:** Vmax = 3.1V Vmin = 2.8 V	Either 1.8 V or 2.95 V (U)SIM card is supported by the module automatically.
UART Interfaces					
Pin Name	**Pin No.**	**I/O**	**Description**	**DC Characteristics**	**Comment**
UART1_TX	34	DO	UART1 transmit	V_{OL}max = 0.45 V V_{OH}min = 1.35 V	1.8 V power domain.

UART1_RX	35	DI	UART1 receive	V_{IL}max = 0.63 V V_{IH}min = 1.17 V	If unused, keep these pins open.
UART1_CTS	36	DI	DTE clear to send signal from DCE	V_{IL}max = 0.63 V V_{IH}min = 1.17 V	Connect to DTE'S CTS; 1.8 V power domain. If unused, keep these pins open.
UART1_RTS	37	DO	DTE request to send signal to DCE	V_{OL}max = 0.45 V V_{OH}min = 1.35 V	Connect to DTE'S RTS; 1.8 V power domain. If unused, keep these pins open.
UART2_RX	93	DI	UART2 receive; Debug port by default	V_{IL}max = 0.63 V V_{IH}min = 1.17 V	1.8 V power domain. If unused, keep these pins open.
UART2_TX	94	DO	UART2 transmit; Debug port by default	V_{OL}max = 0.45 V V_{OH}min = 1.35 V	
SD Card Interface					
Pin Name	**Pin No.**	**I/O**	**Description**	**DC Characteristics**	**Comment**
SD_LDO11	38	PO	SD card power supply	Vnom = 2.95 V $I_O$max = 600 mA	
SD_LDO12	32	PO	1.8/2.95 V output power for SD card pull-up circuits	Vnom = 1.8/2.95 V $I_O$max = 50 mA	
SD_CLK	39	DO	SD card clock	**1.8 V SD card:** V_{OL}max = 0.45 V V_{OH}min = 1.4 V **2.95 V SD card:** V_{OL}max = 0.37 V V_{OH}min = 2.2 V	Control characteristic impedance as 50 Ω.
SD_CMD	40	DIO	SD card command	**1.8 V SD card:** V_{IL}max = 0.58 V V_{IH}min = 1.27 V V_{OL}max = 0.45 V V_{OH}min = 1.4 V	
SD_DATA0	41	DIO	SDIO data bit 0		
SD_DATA1	42	DIO	SDIO data bit 1		

SD_DATA2	43	DIO	SDIO data bit 2	**2.95 V SD card:** V_{IL}max = 0.73 V V_{IH}min = 1.84 V V_{OL}max = 0.37 V V_{OH}min = 2.2 V	
SD_DATA3	44	DIO	SDIO data bit 3		
SD_DET	45	DI	SD card hot-plug detect	V_{IL}max = 0.63 V V_{IH}min = 1.17 V	Active low.
Touch Panel (TP) Interface					
Pin Name	**Pin No.**	**I/O**	**Description**	**DC Characteristics**	**Comment**
TP_INT	30	DI	TP interrupt	V_{IL}max = 0.63 V V_{IH}min = 1.17 V	1.8 V power domain.
TP_RST	31	DO	TP reset	V_{OL}max = 0.45 V V_{OH}min = 1.35 V	1.8 V power domain. Active low.
TP_I2C_SCL	47	OD	TP I2C clock		1.8 V power domain.
TP_I2C_SDA	48	OD	TP I2C data		1.8 V power domain.
LCM Interface					
Pin Name	**Pin No.**	**I/O**	**Description**	**DC Characteristics**	**Comment**
PWM	29	DO	PWM output	V_{OL}max = 0.45 V V_{OH}max = VBAT_BB	Adjust the backlight brightness.
LCD_RST	49	DO	LCD reset	V_{OL}max = 0.45 V V_{OH}min = 1.35 V	1.8 V power domain. Active low.
LCD_TE	50	DI	LCD tearing effect	V_{IL}max = 0.63 V V_{IH}min = 1.17 V	1.8 V power domain.
MIPI_DSI_CLKN	52	AO	LCD MIPI clock (-)		
MIPI_DSI_CLKP	53	AO	LCD MIPI clock (+)		
MIPI_DSI_LN0N	54	AO	LCD MIPI data 0 (-)		
MIPI_DSI_LN0P	55	AO	LCD MIPI data 0 (+)		
MIPI_DSI_LN1N	56	AO	LCD MIPI data 1 (-)		

MIPI_DSI_LN1P	57	AO	LCD MIPI data 1 (+)		
MIPI_DSI_LN2N	58	AO	LCD MIPI data 2 (-)		
MIPI_DSI_LN2P	59	AO	LCD MIPI data 2 (+)		
MIPI_DSI_LN3N	60	AO	LCD MIPI data 3 (-)		
MIPI_DSI_LN3P	61	AO	LCD MIPI data 3 (+)		
Camera Interfaces					
Pin Name	**Pin No.**	**I/O**	**Description**	**DC Characteristics**	**Comment**
MIPI_CSI0_CLKN	63	AI	Rear camera MIPI clock (-)		
MIPI_CSI0_CLKP	64	AI	Rear camera MIPI clock (+)		
MIPI_CSI0_LN0N	65	AI	Rear camera MIPI data 0 (-)		
MIPI_CSI0_LN0P	66	AI	Rear camera MIPI data 0 (+)		
MIPI_CSI0_LN1N	67	AI	Rear camera MIPI data 1 (-)		
MIPI_CSI0_LN1P	68	AI	Rear camera MIPI data 1 (+)		
MIPI_CSI1_CLKN	70	AI	Front camera MIPI clock (-)		
MIPI_CSI1_CLKP	71	AI	Front camera MIPI clock (+)		
MIPI_CSI1_LN0N	72	AI	Front camera MIPI data (-)		
MIPI_CSI1_LN0P	73	AI	Front camera MIPI data (+)		
CAM0_MCLK	74	DO	Clock of rear camera	V_{OL}max = 0.45 V V_{OH}min = 1.35 V	
CAM1_MCLK	75	DO	Clock of front camera		
CAM0_RST	79	DO	Reset of rear camera		
CAM0_PWD	80	DO	Power down of rear camera		

CAM1_RST	81	DO	Reset of front camera		
CAM1_PWD	82	DO	Power down of front camera		
CAM_I2C_SCL	83	OD	I2C clock of camera		1.8 V power domain.
CAM_I2C_SDA	84	OD	I2C data of camera		1.8 V power domain.
Keypad Interfaces					
Pin Name	**Pin No.**	**I/O**	**Description**	**DC Characteristics**	**Comment**
PWRKEY	114	DI	Turns on/off the module	V_{IL}max = 0.63 V V_{IH}min = 1.17 V	Internally pulled up to 1.8 V. Active low.
KEY_VOL_UP	95	DI	Volume up		If unused, keep this pin open.
KEY_VOL_DOWN	96	DI	Volume down		If unused, keep this pin open.
SENSOR_I2C Interface					
Pin Name	**Pin No.**	**I/O**	**Description**	**DC Characteristics**	**Comment**
SENSOR_I2C_SCL	91	OD	I2C clock for external sensor		1.8 V power domain.
SENSOR_I2C_SDA	92	OD	I2C data for external sensor		1.8 V power domain.
ADC Interfaces					
Pin Name	**Pin No.**	**I/O**	**Description**	**DC Characteristics**	**Comment**
ADC	128	AI	General purpose ADC		Maximum input voltage: 1.7 V.
VBAT_SNS	133	AI	Battery voltage detect		Maximum input voltage: 4.5 V.
VBAT_THERM	134	AI	Battery temperature detect		Internally pulled up. Externally connect it to the 47 kΩ NTC thermistor. If it is not used, connect it to GND with a 47 kΩ resistor.
Antenna Interfaces					

Pin Name	Pin No.	I/O	Description	DC Characteristics	Comment
ANT_MAIN	87	AIO	Main antenna interface		
ANT_DRX	131	AI	Rx-diversity antenna interface		50 Ω impedance.
ANT_GNSS	121	AI	GNSS antenna interface		
ANT_WIFI/BT	77	AIO	Wi-Fi/Bluetooth antenna interface		
GPIO Interfaces					
Pin Name	**Pin No.**	**I/O**	**Description**	**DC Characteristics**	**Comment**
GPIO_23	33	DIO	General-purpose input/output		
GPIO_32	90	DIO	General-purpose input/output		
GPIO_31	97	DIO	General-purpose input/output		
GPIO_92	98	DIO	General-purpose input/output		
GPIO_88 [2]	99	DIO	General-purpose input/output		
GPIO_89	100	DIO	General-purpose input/output	V_{IL}max = 0.63 V V_{IH}min = 1.17 V V_{OL}max = 0.45 V V_{OH}min = 1.4 V	1.8 V power domain.
GPIO_69	101	DIO	General-purpose input/output		
GPIO_68 [2]	102	DIO	General-purpose input/output		
GPIO_97	103	DIO	General-purpose input/output		
GPIO_110	104	DIO	General-purpose input/output		
GPIO_0	105 [3]	DIO	General-purpose input/output		
GPIO_15					

[2] GPIO_68 and GPIO_88 cannot be pulled up during start-up.

[3] As for SC20-CE R1.1/-CEL R1.1, SC20-E/-EL, SC20-A/-AL, SC20-AU/-AUL, SC20-J/-JL, SC20-EU, pins 105, 116, 117, 118 and 119 are GPIO_0, GPIO_11, GPIO_10, GPIO_9 and GPIO_8 respectively; as for SC20-AX, SC20-EX, pins 105, 116, 117, 118 and 119 are GPIO_15, GPIO_3, GPIO_2, GPIO_1 and GPIO_0 respectively.

GPIO_98	106	DIO	General-purpose input/output
GPIO_94	107	DIO	General-purpose input/output
GPIO_36	108	DIO	General-purpose input/output
GPIO_65	109	DIO	General-purpose input/output
GPIO_96	110	DIO	General-purpose input/output
GPIO_58	112	DIO	General-purpose input/output
GPIO_99	113	DIO	General-purpose input/output
GPIO_95	115	DIO	General-purpose input/output
GPIO_11 GPIO_3	116 [3]	DIO	General-purpose input/output
GPIO_10 GPIO_2	117 [3]	DIO	General-purpose input/output
GPIO_9 GPIO_1	118 [3]	DIO	General-purpose input/output
GPIO_8 GPIO_0	119 [3]	DIO	General-purpose input/output
GPIO_16	123	DIO	General-purpose input/output
GPIO_17	124	DIO	General-purpose input/output

Other Interfaces

Pin Name	Pin No.	I/O	Description	DC Characteristics	Comment
VIB_DRV	28	PO	Motor drive	Vmin = 1.2 V Vmax=3.1 V $I_O$max = 175 mA	Connect it to the negative pole of the motor.

RESET_N	179	DI	Resets the module	Disabled by default and can be enabled through software configuration.
USB_BOOT	46	DI	Forces the module to enter emergency download mode	You can force the module to enter emergency download mode by pulling it up to LDO5_1V8 during power-up.
CHARGE_SEL	127	DI	Charger select	If you use an internal charging chip, keep this pin open. If you use an external charging chip, connect it to GND.
Reserved Pins				
Pin Name	**Pin No.**			**Comment**
RESERVED	151, 152, 153, 154, 155, 156, 157, 158, 159, 183, 187, 190, 191, 194, 195, 196, 197, 199, 202, 203, 204, 205, 206, 207, 210			Keep these pins open.

3.4. Power Supply

3.4.1. Power Supply Pins

SC20 series provides two VBAT_RF pins and two VBAT_BB pins for connection with the external power supply. The VBAT_RF pins are used for the RF part of the module and the VBAT_BB pins are used for the baseband part of the module.

3.4.2. Voltage Stability Requirements

The power supply range of the module is 3.5–4.2 V, and the recommended value is 3.8 V. The power supply performance, such as load capacity, voltage ripple, etc. directly influences the module's performance and stability. Under ultimate conditions, the transient peak current of the module may surge up to 3 A. If the supply voltage is not enough, there will be voltage drops, and if the voltage drops below 3.1 V, the module will be turned off automatically. Therefore, make sure the input voltage never drops

below 3.1 V.

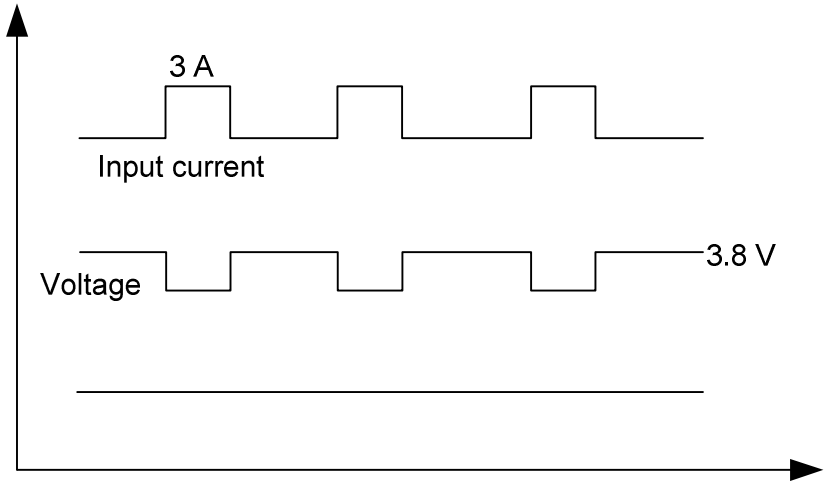

Figure 3: Voltage Drop Sample

To decrease voltage drop, a bypass capacitor of about 100 μF with low ESR (ESR = 0.7 Ω) should be used, and a multi-layer ceramic chip capacitor (MLCC) should also be reserved due to its ultra-low ESR. It is recommended to use three ceramic capacitors (100 nF, 33 pF, 10 pF) for composing the MLCC array, and place these capacitors close to VBAT_BB/VBAT_RF pins. The main power supply from the external application must be a single voltage source and can be expanded to two sub paths with star structure. The width of VBAT_BB trace should be no less than 1.5 mm, and the width of VBAT_RF trace should be no less than 2 mm. In principle, the longer the VBAT trace is, the wider it should be.

In addition, in order to get a stable power source, it is suggested to use a TVS diode and place it as close to the VBAT_BB/VBAT_RF pins as possible to increase voltage surge withstand capability. The following figure shows the star structure of the power supply.

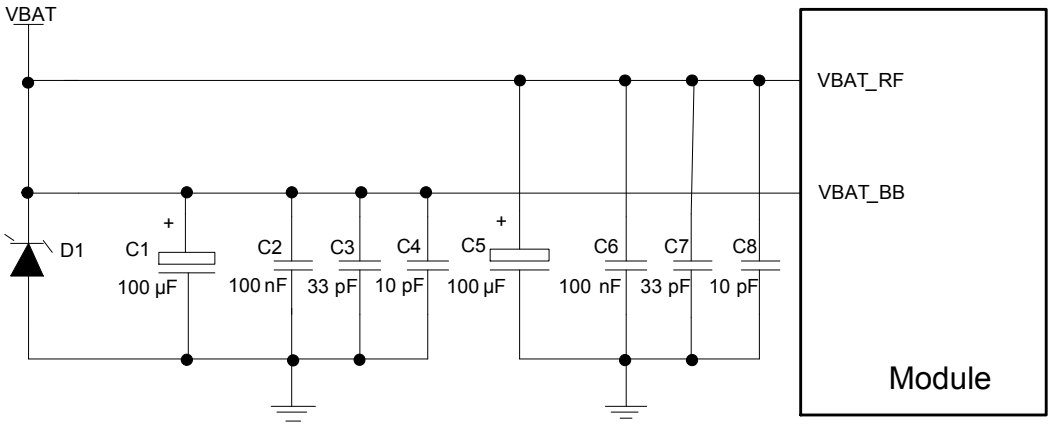

Figure 4: Star Structure of the Power Supply

3.4.3. Reference Design for Power Supply

The power design for the module is very important, as the performance of module largely depends on the power source. The power supply of SC20 series should be able to provide enough current of at least 3 A. If the voltage drop between the input and output is not too high, it is suggested to use an LDO to supply power for the module. If there is a big voltage difference between the input source and the desired output (VBAT), a buck converter is preferred to be used as the power supply.

The following figure shows a reference design for +5 V input power source which adopts an LDO (MIC29302WU) from MICREL. The typical output voltage is 3.8 V and the maximum load current is 3.0 A.

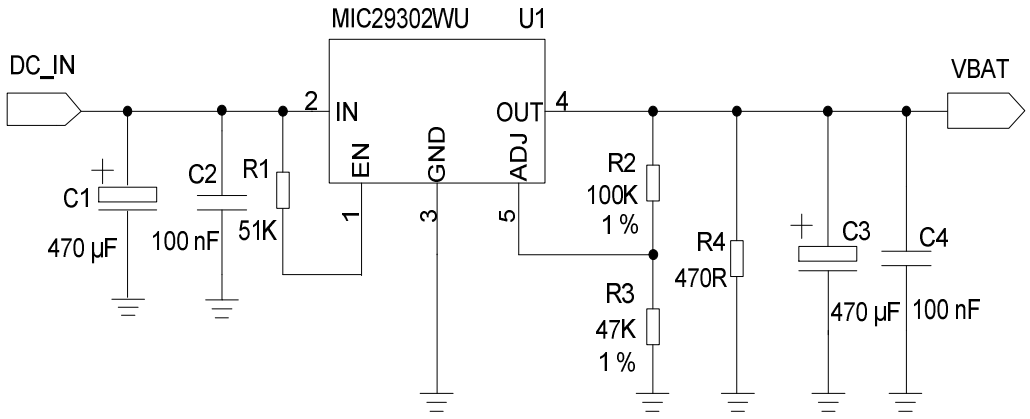

Figure 5: Reference Circuit of Power Supply

NOTE

1. It is recommended to switch off the power supply when the module is in abnormal state, and then switch on the power to restart the module.
2. The module supports battery charging by default. If the above power supply design is adopted, make sure the charging function is disabled by software, or connect VBAT to a Schottky diode in series to avoid the reverse current to the power supply chip.

3.5. Turn on and off Scenarios

3.5.1. Turn on with PWRKEY

The module can be turned on by driving PWRKEY pin low for at least 1.6 s. PWRKEY pin is pulled to 1.8 V internally. It is recommended to use an open drain/collector driver to control the PWRKEY. A simple reference circuit is illustrated in the following figure.

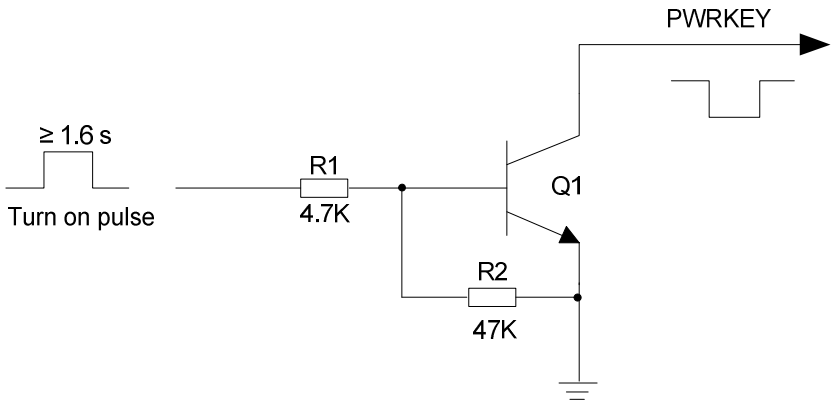

Figure 6: Turn on the Module Using Driving Circuit

The other way to control the PWRKEY is using a button directly. A TVS component is indispensable to be placed nearby the button for ESD protection. A reference circuit is shown in the following figure.

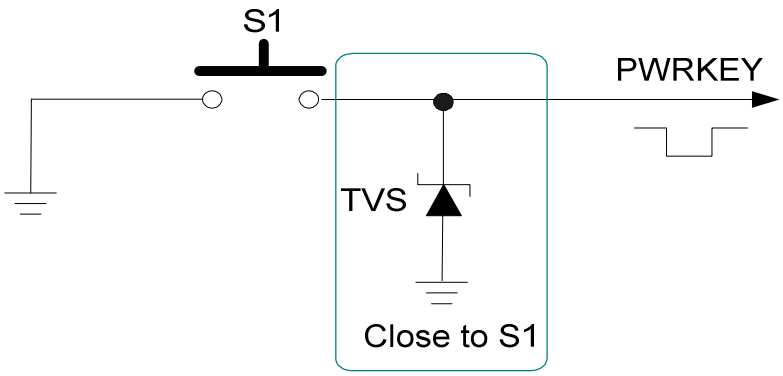

Figure 7: Turn on the Module Using Keystroke

The turning on scenario is illustrated in the following figure.

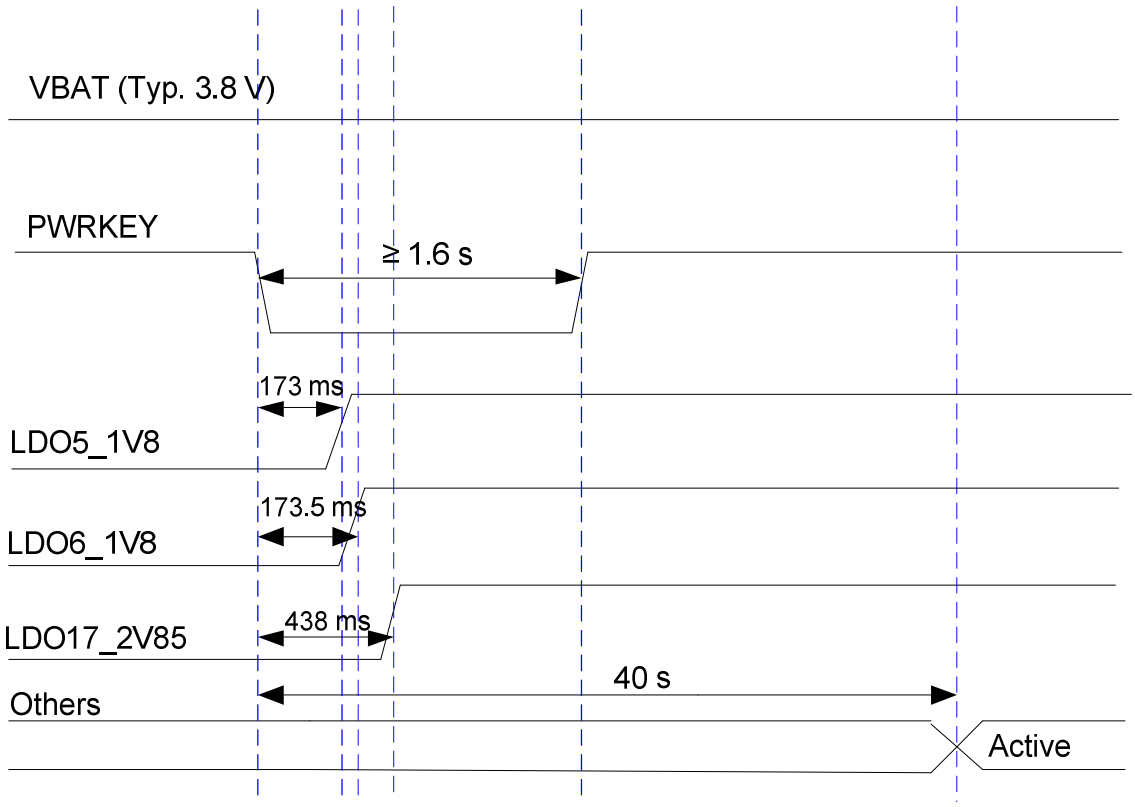

Figure 8: Timing of Turning on Module

NOTE

1. When the module is powered on for the first time, its timing of turning on will be 45 ms longer than that shown above.
2. Make sure that VBAT is stable before pulling down PWRKEY pin. The recommended time between them is no less than 30 ms. PWRKEY pin cannot be pulled down all the time.

3.5.2. Turn off

Drive the PWRKEY pin low for at least 1 s, and then choose to turn off the module when the prompt window comes up.

The other way to turn off the module is to drive PWRKEY low for at least 8 s. The module will execute forced shutdown. The forced power-down scenario is illustrated in the following figure.

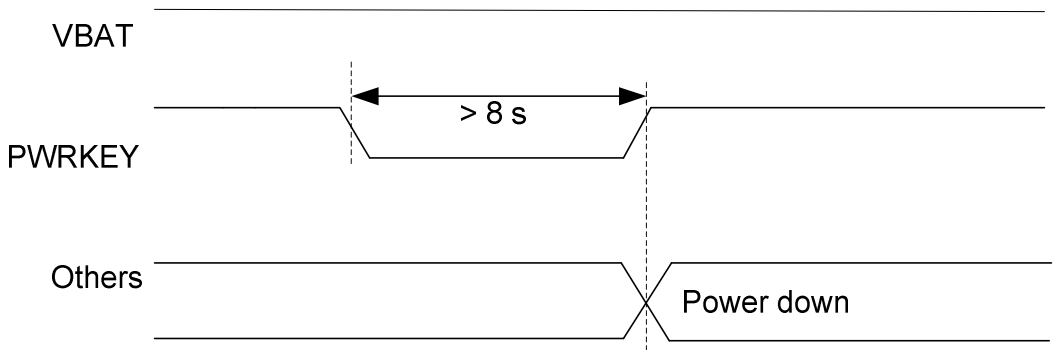

Figure 9: Timing of Turning off Module

3.6. VRTC Interface

The RTC can be powered by an external power source through VRTC when the module is powered down and there is no power supply for the VBAT. The external power source can be a capacitor or rechargeable battery (such as coil cells) according to application demands. The following are some reference circuit designs when an external battery or capacitor is utilized for powering RTC.

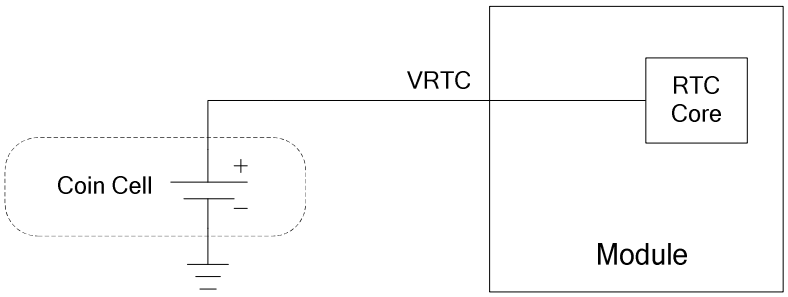

Figure 10: RTC Powered by Coin Cell

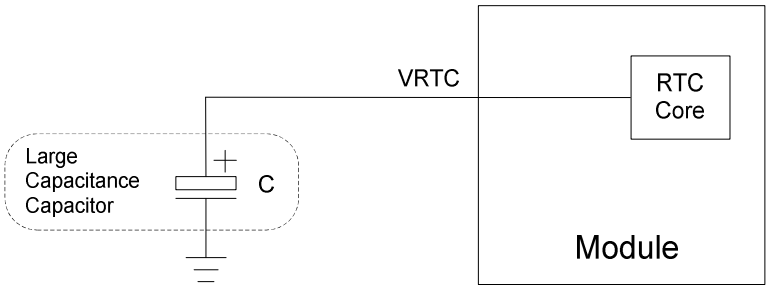

Figure 11: RTC Powered by Capacitor

If RTC is ineffective, it can be synchronized through network after the module is powered on.

- The input voltage range is 2.0–3.25 V and the typical value is 3.0 V for VRTC. When VBAT is disconnected, the average consumption is about 5 μA.
- When powered by VBAT, the RTC error is 50 ppm. When powered by VRTC, the RTC error is 200 ppm.
- If a rechargeable battery is used, the ESR of the battery should be less than 2 kΩ, and it is recommended to use the MS621FE-FL11E of SEIKO.
- If a large-capacitance capacitor is selected, it is recommended to use a 100 μF capacitor with low ESR. The capacitor will be able to power the real-time clock for 45 seconds.

3.7. Power Output

SC20 series supports output of regulated voltages for peripheral circuits. During application, it is recommended to add capacitors (33 pF and 10 pF) in parallel to suppress high frequency noise.

Table 10: Power Description

Pin Name	Default Voltage (V)	Driving Current (mA)	Idle
LDO5_1V8	1.8	20	Keep
LDO6_1V8	1.8	100	-
LDO17_2V85	2.85	300	-
SD_LDO12	1.8/2.95	50	-
SD_LDO11	2.95	600	-
USIM1_VDD	1.8/2.95	50	-
USIM2_VDD	1.8/2.95	50	-

3.8. Battery Charging and Management

SC20 series can supports battery charging. The battery charger in the module supports trickle charging, constant current charging and constant voltage charging modes, which optimize the charging procedure for Li-ion batteries.

- **Trickle charging:** There are two steps in this mode. When the battery voltage is below 2.8 V, a 90 mA trickle charging current is applied to the battery. When the battery voltage is charged up and is between 2.8 V and 3.2 V, the charging current can be set to 450 mA maximally.
- **Constant current mode (CC mode):** When the battery is increased to between 3.2 V and 4.2 V, the system will switch to CC mode. The maximum charging current is 1.44 A when adapter is used for battery charging; and the maximum charging current is 450 mA during USB charging.
- **Constant voltage mode (CV mode):** When the battery voltage reaches the final value 4.2 V, the system will switch to CV mode and the charging current will decrease gradually. When the battery level reaches 100 %, the charging is completed.

The module supports battery temperature detection in the condition that the battery integrates a thermistor (47 kΩ 1 % NTC thermistor with B-constant of 4050 K by default; SDNT1608X473F4050FTF of SUNLORD is recommended) and the thermistor is connected to VBAT_THERM pin. If VBAT_THERM pin is not connected, there will be malfunctions such as battery charging failure, battery level display error, etc. The default battery temperature range is -3.0 °C to 48.5 °C.

A reference design for battery charging circuit is shown as below.

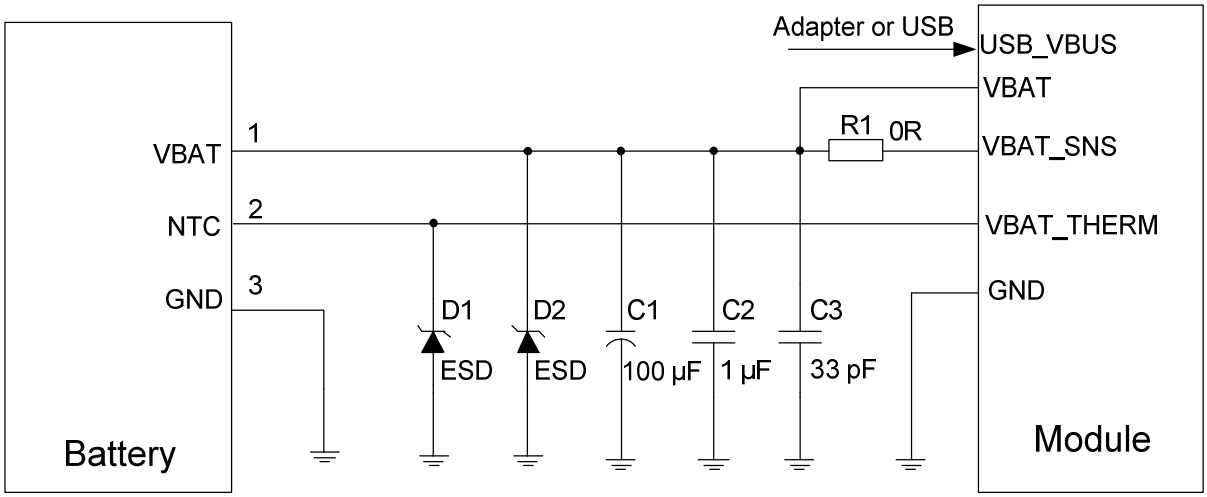

Figure 12: Reference Design for Battery Charging Circuit

Mobile devices such as mobile phones and handheld POS systems are powered by batteries. When different batteries are utilized, the charging and discharging curve must be modified correspondingly to achieve the best effect.

If the thermistor is not available in the battery, or an adapter is utilized for powering module, you must connect VBAT_THERM to GND via a 47 kΩ resistor. Otherwise, the system may mistakenly judge that the battery temperature is abnormal, and therefore cause battery charging failure.

VBAT_SNS pin must be connected. Otherwise, the module will have abnormalities in voltage detection, as well as associated power-on/off and battery charging/discharging issues.

3.9. USB Interface

SC20 series contains one integrated Universal Serial Bus (USB) interface which complies with the USB 2.0 specification and supports high-speed (480 Mbps) and full-speed (12 Mbps) modes. The USB interface is used for AT command communication, data transmission, software debugging and firmware upgrade.

The following table shows the pin definition of USB interface.

Table 11: Pin Definition of USB Interface

Pin Name	Pin No.	I/O	Description	Comment
USB_VBUS	141, 142	PI	USB 5 V power input and USB insertion detection	Vmax = 6.3 V Vmin = 4.35 V Vnom = 5.0 V
USB_DM	13	AIO	USB 2.0 differential data (-)	Compliant with USB 2.0 standard. Require differential impedance of 90 Ω.
USB_DP	14	AIO	USB 2.0 differential data (+)	
USB_ID	16	AI	USB ID detect	High level by default.

USB_VBUS can be powered by the USB power or adapter. It can be used for USB connection detection, as well as for battery charging via the internal PMU. The input voltage of power supply ranges from 4.35 V to 6.3 V, and the typical value is 5.0 V. SC20 series supports charging management for a single Li-ion battery, but different charging parameters should be set for batteries with different models or capacities. The module is available with a built-in linear-charging circuit which supports maximally 1.44 A charging current.

The following are two USB interface reference designs for you to choose from.

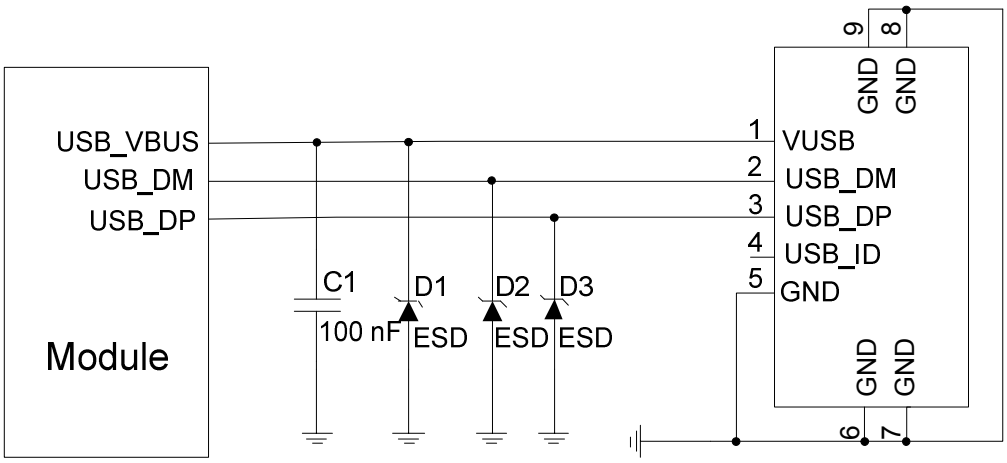

Figure 13: USB Interface Reference Design (OTG is not Supported)

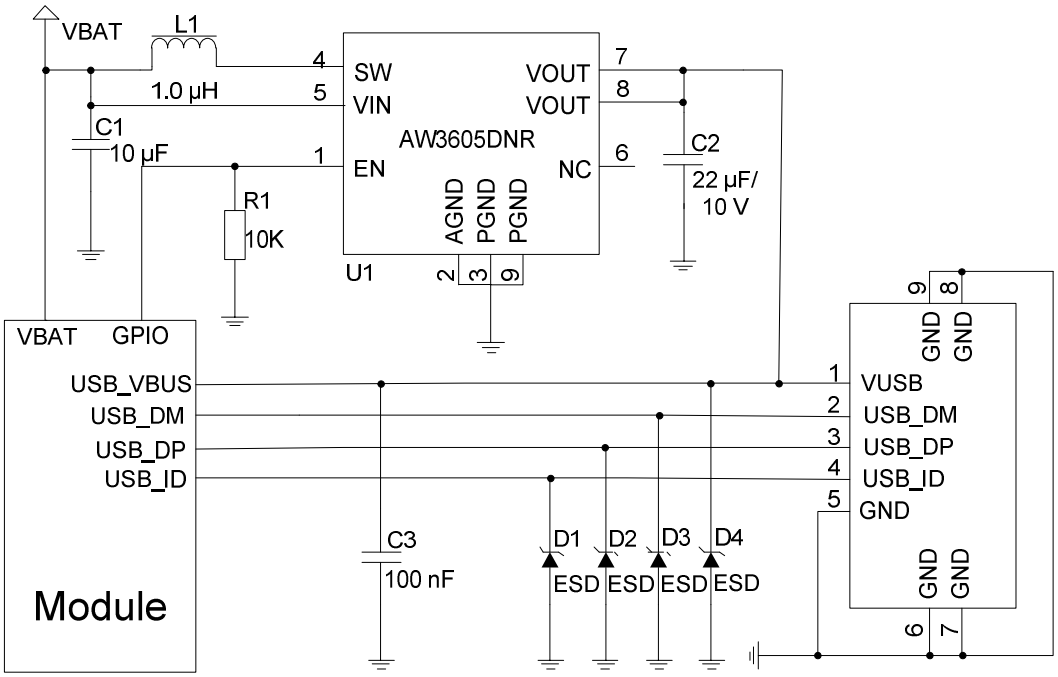

Figure 14: USB Interface Reference Design (OTG is Supported)

SC20 series supports OTG protocol. If OTG function is needed, see the above figure for the reference design. AW3605DNR is a high efficiency DC-DC chip manufactured by AWINIC, and you can also choose a suitable one according to your own demands.

In order to ensure USB performance, comply with the following principles while designing USB interface.

- Route the USB signal traces as a differential pair with total grounding. The impedance of USB differential trace is 90 Ω.
- Keep the ESD protection devices as close as possible to the USB connector. Pay attention to the influence of junction capacitance of ESD protection devices on USB data lines. Typically, the capacitance value should be less than 2 pF.
- Do not route signal traces under crystals, oscillators, magnetic devices or RF signal traces. It is important to route the USB differential traces in inner-layer with ground shielding on not only upper and lower layer but also right and left sides.
- Make sure the trace length difference between USB_DM and USB_DP is not exceeding 6.6 mm.

Table 12: USB Trace Length Inside the Module

Pin No.	Signal	Length (mm)	Length Difference (DP-DM)
13	USB_DM	29.43	-0.07
14	USB_DP	29.36	

3.10. UART Interfaces

The module provides two UART interfaces:

- **UART1:** 4-wire UART interface with RTS/CTS hardware flow control; baud rate up to 4 Mbps
- **UART2:** 2-wire UART interface used for debugging

Table 13: Pin Definition of UART Interfaces

Pin Name	Pin No.	I/O	Description	Comment
UART1_TX	34	DO	UART1 transmit	1.8 V power domain. If it is unused, keep it open.
UART1_RX	35	DI	UART1 receive	
UART1_CTS	36	DI	DTE clear to send signal from DCE	Connect to DTE'S CTS; 1.8 V power domain. If unused, keep these pins open.
UART1_RTS	37	DO	DTE request to send signal to DCE	Connect to DTE'S RTS; 1.8 V power domain.

				If unused, keep these pins open.
UART2_RX	93	DI	UART2 receive; Debug port by default	1.8 V power domain. If it is unused, keep it open.
UART2_TX	94	DO	UART2 transmit; Debug port by default	

UART1 provides 1.8 V logic level. A level translator should be used if your application is equipped with a 3.3 V UART interface. A level translator TXS0104PWR provided by *Texas Instruments* is recommended. The following figure shows the reference design.

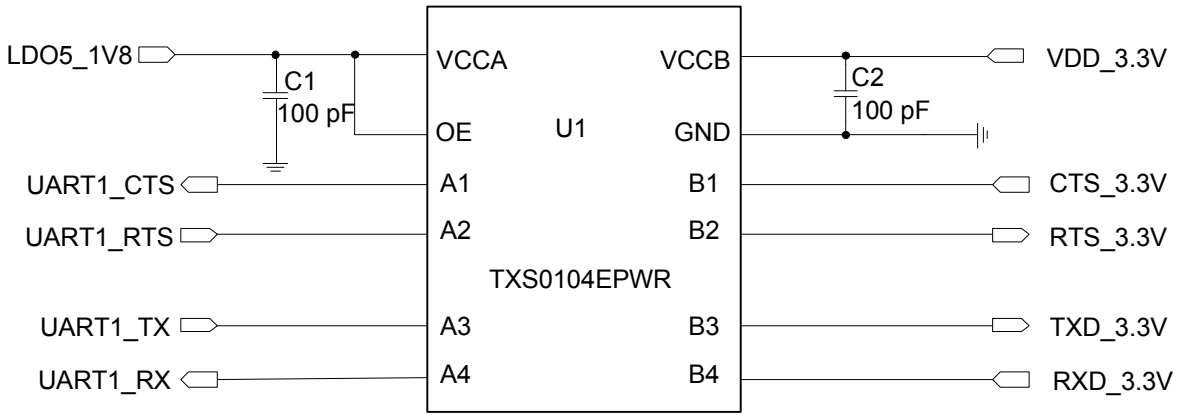

Figure 15: Reference Circuit with Level Translator Chip (for UART1)

The following figure is an example of connection between the module and PC. A voltage level translator and a RS-232 level translator chip are recommended to be added between the module and PC.

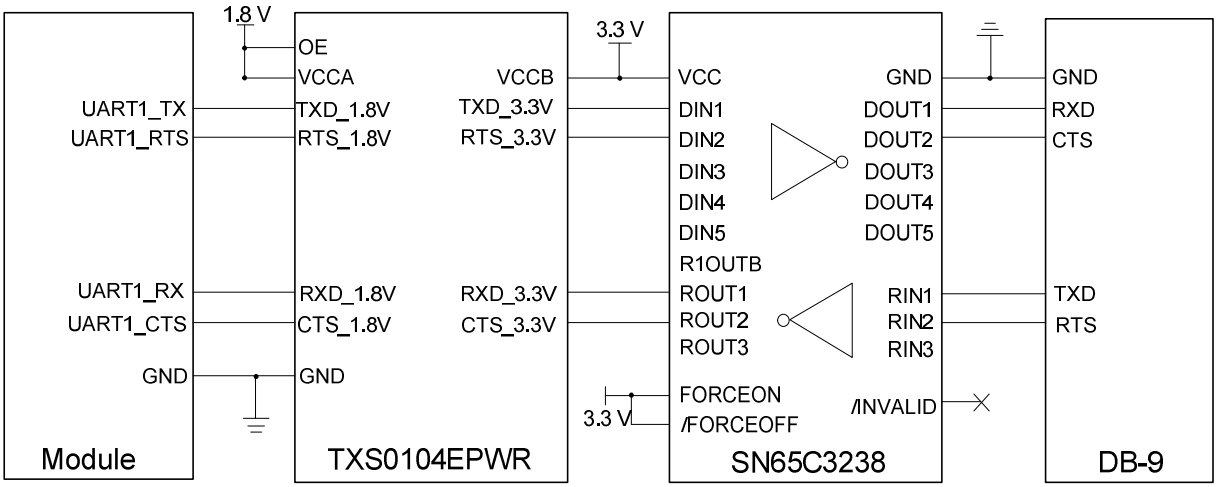

Figure 16: RS-232 Level Match Circuit (for UART1)

NOTE

UART2 is similar to UART1. For the reference design, see that of UART1.

3.11. (U)SIM Interfaces

SC20 series provides two (U)SIM interfaces which meet ETSI and IMT-2000 requirements. Dual SIM Card Dual Standby is supported by default. Either 1.8 V or 2.95 V (U)SIM card is supported, and the (U)SIM card is powered by the internal power supply of the module.

Table 14: Pin Definition of (U)SIM Interfaces

Pin Name	Pin No.	I/O	Description	Comment
USIM2_DETECT	17	DI	(U)SIM2 card hot-plug detect	Active low. Externally pull it up to 1.8 V. If unused, keep this pin open.
USIM2_RST	18	DO	(U)SIM2 card reset	
USIM2_CLK	19	DO	(U)SIM2 card clock	
USIM2_DATA	20	DIO	(U)SIM2 card data	Externally pull it up to USIM2_VDD with a 10 kΩ resistor.
USIM2_VDD	21	PO	(U)SIM2 card power supply	Either 1.8 V or 2.95 V (U)SIM card is supported by the module automatically.
USIM1_DETECT	22	DI	(U)SIM1 card hot-plug detect	Active low. Externally pull it up to 1.8 V. If unused, keep this pin open.
USIM1_RST	23	DO	(U)SIM1 card reset	
USIM1_CLK	24	DO	(U)SIM1 card clock	
USIM1_DATA	25	DIO	(U)SIM1 card data	Externally pull it up to USIM1_VDD with a 10 kΩ resistor.
USIM1_VDD	26	PO	(U)SIM1 card power supply	Either 1.8 V or 2.95 V (U)SIM card is supported by the module automatically.

SC20 series supports (U)SIM card hot-plug via the USIM_DETECT pin. A reference circuit for (U)SIM interface with an 8-pin (U)SIM card connector is shown below.

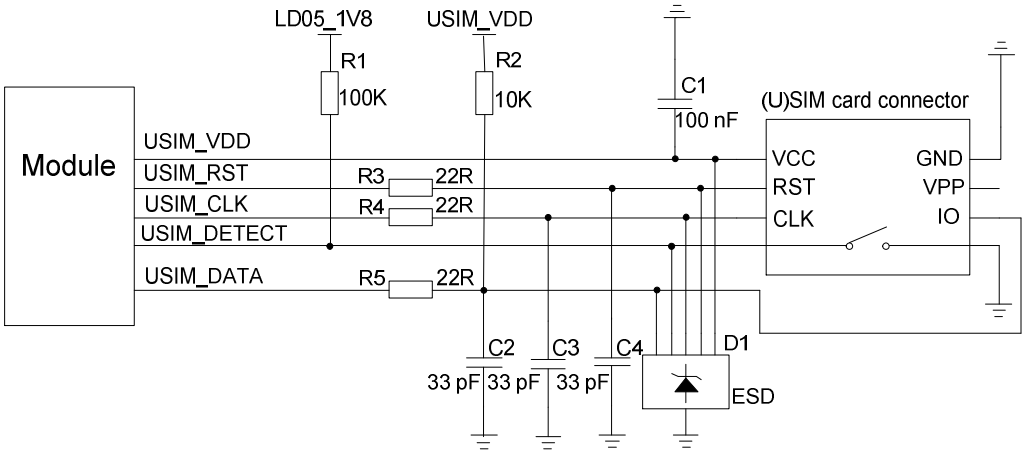

Figure 17: Reference Circuit for (U)SIM Interface with an 8-pin (U)SIM Card Connector

If there is no need to use USIM_DETECT for (U)SIM card hot-plug, keep it open. The following is a reference circuit for (U)SIM interface with a 6-pin (U)SIM card connector.

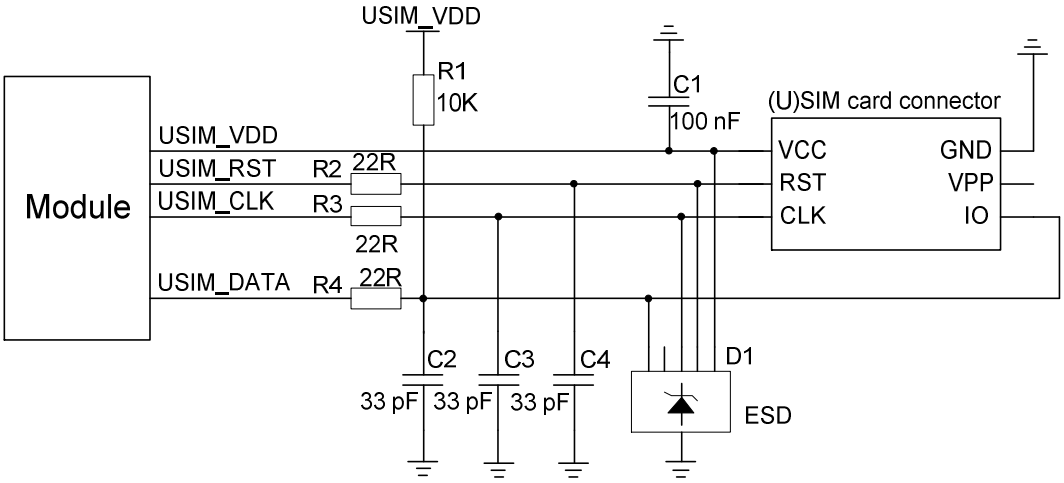

Figure 18: Reference Circuit for (U)SIM Interface with a 6-pin (U)SIM Card Connector

In order to ensure good performance and avoid damage to (U)SIM cards, follow the criteria below in (U)SIM circuit design:

- Keep placement of (U)SIM card connector as close to the module as possible. Keep the trace length of (U)SIM card signals as less than 200 mm as possible.
- Keep (U)SIM card signals away from RF and VBAT traces.
- A filter capacitor shall be reserved for USIM_VDD, and its maximum capacitance should not exceed 1 μF. The capacitor should be placed close to the (U)SIM card connector.

- To avoid cross-talk between USIM_DATA and USIM_CLK, keep them away from each other and shield them with ground. USIM_RST also needs ground protection.
- In order to offer good ESD protection, it is recommended to add a TVS diode array with parasitic capacitance not exceeding 50 pF. 22 Ω resistors should be added in series between the module and (U)SIM card to suppress EMI spurious transmission and enhance ESD protection. Please note that the (U)SIM peripheral circuit should be close to the (U)SIM card connector.
- The 33 pF capacitors should be added in parallel on USIM_DATA, USIM_CLK and USIM_RST signal lines to filter RF interference, and they should be placed as close to the (U)SIM card connector as possible.

3.12. SD Card Interface

The SD card interface of SC20 series supports SD 3.0 protocol and 4-bit SDIO. The pin definition is shown below.

Table 15: Pin Definition of SD Card Interface

Pin Name	Pin No.	I/O	Description	Comment
SD_LDO11	38	PO	SD card power supply	Vnom = 2.95 V $I_O$max = 600 mA
SD_LDO12	32	PO	1.8/2.95 V output power for SD card pull-up circuits	Vnom = 1.8/2.95 V $I_O$max = 50 mA
SD_CLK	39	DO	SD card clock	Control characteristic impedance as 50 Ω.
SD_CMD	40	DIO	SD card command	
SD_DATA0	41	DIO	SDIO data bit 0	
SD_DATA1	42	DIO	SDIO data bit 1	
SD_DATA2	43	DIO	SDIO data bit 2	
SD_DATA3	44	DIO	SDIO data bit 3	
SD_DET	45	DI	SD card hot-plug detect	Active low.

A reference circuit for SD card interface is shown below.

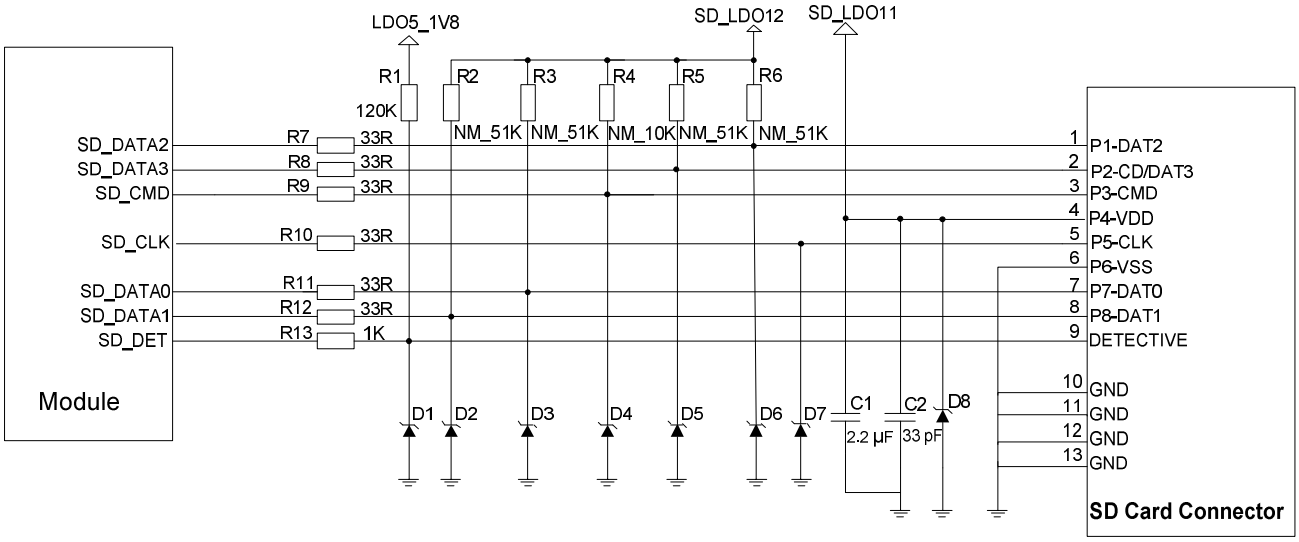

Figure 19: Reference Circuit for SD Card Interface

SD_LDO11 is the power supply for the external SD card. The maximum drive current is about 600 mA. Because of the high drive current, it is recommended that the trace width is 0.6 mm or more. In order to ensure the stability of drive power, a 2.2 μF capacitor should be added in parallel near the SD card connector.

SD_CMD, SD_CLK, SD_DATA0, SD_DATA1, SD_DATA2 and SD_DATA3 are all high-speed signal lines. In PCB design, control the characteristic impedance of them as 50 Ω, and do not cross them with other traces. It is recommended to route the traces on the inner layer of PCB, and keep the same trace length for them. Additionally, SD_CLK needs ground shielding.

Layout guidelines:

- Control impedance as 50 Ω ±10 %, and ground shielding is required.
- The total trace length difference between SD_CLK and other signal traces should not exceed 1 mm.

Table 16: SD Card Trace Length Inside the Module

Pin No.	Signal	Length (mm)
39	SD_CLK	14.60
40	SD_CMD	14.55
41	SD_DATA0	14.53
42	SD_DATA1	14.56

43	SD_DATA2	14.53
44	SD_DATA3	14.57

3.13. GPIO Interfaces

SC20 series has abundant GPIO interfaces with logic level of 1.8 V. The pin definition is listed below.

Table 17: Pin Definition of GPIO Interfaces

Pin No.	Pin Name	GPIO No.	Default state	Comment
30	TP_INT	GPIO_13	B-PD: nppukp [4]	Wakeup [5]
31	TP_RST	GPIO_12	B-PD: nppukp	Wakeup
33	GPIO_23	GPIO_23	B-PD: nppukp	
34	UART1_TX	GPIO_20	B-PD: nppukp	Wakeup
35	UART1_RX	GPIO_21	B-PD: nppukp	Wakeup
36	UART1_CTS	GPIO_111	B-PD: nppukp	Wakeup
37	UART1_RTS	GPIO_112	B-PD: nppukp	Wakeup
45	SD_DET	GPIO_38	B-PD: nppukp	Wakeup
47	TP_I2C_SCL	GPIO_19	B-PD: nppukp	
48	TP_I2C_SDA	GPIO_18	B-PD: nppukp	
49	LCD_RST	GPIO_25	B-PD: nppukp	Wakeup
50	LCD_TE	GPIO_24	B-PD: nppukp	
74	CAM0_CLK	GPIO_26	B-PD: nppukp	
75	CAM1_CLK	GPIO_27	B-PD: nppukp	

[4] B: Bidirectional digital with CMOS input. PD: nppukp = default pull-down with programmable options following the colon (:).

[5] Wakeup: Interrupt pins that can wake up the system.

79	CAM0_RST	GPIO_35	B-PD: nppukp	Wakeup
80	CAM0_PWD	GPIO_34	B-PD: nppukp	Wakeup
81	CAM1_RST	GPIO_28	B-PD: nppukp	Wakeup
82	CAM1_PWD	GPIO_33	B-PD: nppukp	
83	CAM_I2C_SCL	GPIO_30	B-PD: nppukp	
84	CAM_I2C_SDA	GPIO_29	B-PD: nppukp	
90	GPIO_32	GPIO_32	B-PD: nppukp	
91	SENSOR_I2C_SCL	GPIO_7	B-PD: nppukp	
92	SENSOR_I2C_SDA	GPIO_6	B-PD: nppukp	
93	UART2_RX	GPIO_5	B-PD: nppukp	Wakeup
94	UART2_TX	GPIO_4	B-PD: nppukp	
95	KEY_VOL_UP	GPIO_90	B-PD: nppukp	Wakeup
96	KEY_VOL_DOWN	GPIO_91	B-PD: nppukp	Wakeup
97	GPIO_31	GPIO_31	B-PD: nppukp	Wakeup
98	GPIO_92	GPIO_92	B-PD: nppukp	Wakeup
99	GPIO_88 [6]	GPIO_88	B-PD: nppukp	
100	GPIO_89	GPIO_89	B-PD: nppukp	
101	GPIO_69	GPIO_69	B-PD: nppukp	
102	GPIO_68 [6]	GPIO_68	B-PD: nppukp	
103	GPIO_97	GPIO_97	B-PD: nppukp	Wakeup
104	GPIO_110	GPIO_110	B-PD: nppukp	Wakeup
105 [7]	GPIO_0	GPIO_0	B-PD: nppukp	

[6] GPIO_68 and GPIO_88 cannot be pulled up during start-up.

[7] As for SC20-CE R1.1/-CEL R1.1, SC20-E/-EL, SC20-A/-AL, SC20-AU/-AUL, SC20-J/-JL, SC20-EU, pins 105, 116, 117, 118 and 119 are GPIO_0, GPIO_11, GPIO_10, GPIO_9 and GPIO_8 respectively; as for SC20-AX, SC20-EX, pins 105, 116, 117, 118 and 119 are GPIO_15, GPIO_3, GPIO_2, GPIO_1 and GPIO_0 respectively.

	GPIO_15	GPIO_15		
106	GPIO_98	GPIO_98	B-PD: nppukp	Wakeup
107	GPIO_94	GPIO_94	B-PD: nppukp	Wakeup
108	GPIO_36	GPIO_36	B-PD: nppukp	Wakeup
109	GPIO_65	GPIO_65	B-PD: nppukp	Wakeup
110	GPIO_96	GPIO_96	B-PD: nppukp	Wakeup
112	GPIO_58	GPIO_58	B-PD: nppukp	Wakeup
113	GPIO_99	GPIO_99	B-PD: nppukp	
115	GPIO_95	GPIO_95	B-PD: nppukp	Wakeup
116 [7]	GPIO_11	GPIO_11	B-PD: nppukp	Wakeup
	GPIO_3	GPIO_3		
117 [7]	GPIO_10	GPIO_10	B-PD: nppukp	
	GPIO_2	GPIO_2		
118 [7]	GPIO_9	GPIO_9	B-PD: nppukp	
	GPIO_1	GPIO_1		
119 [7]	GPIO_8	GPIO_8	B-PD: nppukp	
	GPIO_0	GPIO_0		
123	GPIO_16	GPIO_16	B-PD: nppukp	
124	GPIO_17	GPIO_17	B-PD: nppukp	

NOTE

For more details about GPIO configuration, see ***document [2].***

3.14. SPI Interface

SC20 series provides one SPI interface multiplexed from GPIO interfaces. The interface only supports

master mode.

Table 18: Pin Definition of SPI Interface

Pin Name	Pin No.	I/O	Description	Comment
GPIO_8	119 [8]	IO	SPI master-out slave-in	Can be multiplexed into SPI_MOSI.
GPIO_0				
GPIO_9	118 [8]	IO	SPI master-in slave-out	Can be multiplexed into SPI_MISO.
GPIO_1				
GPIO_10	117 [8]	DO	SPI chip select	Can be multiplexed into SPI_CS_N.
GPIO_2				
GPIO_11	116 [8]	DO	SPI clock	Can be multiplexed into SPI_CLK.
GPIO_3				

3.15. I2C Interfaces

SC20 series provides three I2C interfaces which only support the master mode. As an open drain output, each I2C interface needs to be pulled up externally, and the recommended logic level is 1.8 V.

Table 19: Pin Definition of I2C Interfaces

Pin Name	Pin No.	I/O	Description	Comment
TP_I2C_SCL	47	OD	I2C clock signal of touch panel	Used for touch panel
TP_I2C_SDA	48	OD	I2C data signal of touch panel	
CAM_I2C_SCL	83	OD	I2C clock signal of camera	Used for camera
CAM_I2C_SDA	84	OD	I2C data signal of camera	

[8] As for SC20-CE R1.1/-CEL R1.1, SC20-E/-EL, SC20-A/-AL, SC20-AU/-AUL, SC20-J/-JL, SC20-EU, pins 105, 116, 117, 118 and 119 are GPIO_0, GPIO_11, GPIO_10, GPIO_9 and GPIO_8 respectively; as for SC20-AX, SC20-EX, pins 105, 116, 117, 118 and 119 are GPIO_15, GPIO_3, GPIO_2, GPIO_1 and GPIO_0 respectively.

SENSOR_I2C_SCL	91	OD	I2C clock signal for external sensor	Used for external sensor
SENSOR_I2C_SDA	92	OD	I2C data signal for external sensor	

3.16. ADC Interfaces

SC20 series provides three analog-to-digital converter (ADC) interfaces, and the pin definition is shown below.

Table 20: Pin Definition of ADC Interfaces

Pin Name	Pin No.	I/O	Description	Comment
ADC	128	AI	General purpose ADC	Maximum input voltage: 1.7 V.
VBAT_SNS	133	AI	Battery voltage detect	Maximum input voltage: 4.5 V.
VBAT_THERM	134	AI	Battery temperature detect	Internally pulled up. Externally connect it to the 47 kΩ NTC thermistor. If it is not used, connect it to GND with a 47 kΩ resistor.

The resolution of the ADC pin is up to 16 bits and the effective resolution is 12 bits.

NOTE

When the input voltage exceeds the maximum input voltage of the VBAT_SNS pin, apply the voltage division design via the ADC pin instead of VBAT_SNS.

3.17. Motor Drive Interface

The pin definition of motor drive interface is listed below.

Table 21: Pin Definition of Motor Drive Interface

Pin Name	Pin No.	I/O	Description	Comment
VIB_DRV	28	PO	Motor drive	Connect it to the negative pole of the motor.

The motor is driven by an exclusive circuit, and the reference circuit design is shown below.

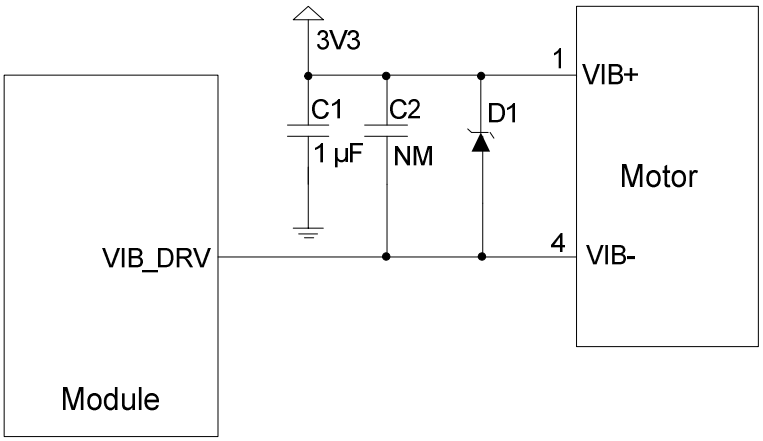

Figure 20: Reference Circuit for Motor Connection

When the motor stops, the redundant electricity can be discharged from the circuit loop formed by diodes, thus avoiding damage to components.

3.18. LCM Interface

SC20 series provides one LCM interface, which is MIPI_DSI standard compliant. The interface supports high-speed differential data transmission with one 4-lane MIPI_DSI and a transmission rate of up to 1.5 Gbps/lane. It supports up to 720P resolution display.

Table 22: Pin Definition of LCM Interface

Pin Name	Pin No.	I/O	Description	Comment
LDO6_1V8	125	PO	1.8 V output power supply for LCM I/O ports	Vnom = 1.8 V $I_O$max = 100 mA
LDO17_2V85	129	PO	2.85 V output power supply for LCM VCC	Vnom = 2.85 V $I_O$max = 300 mA
PWM	29	DO	PWM output	Adjust the backlight brightness.

LCD_RST	49	DO	LCD reset	1.8 V power domain. Active low.
LCD_TE	50	DI	LCD tearing effect	1.8 V power domain.
MIPI_DSI_CLKN	52	AO	LCD MIPI clock (-)	
MIPI_DSI_CLKP	53	AO	LCD MIPI clock (+)	
MIPI_DSI_LN0N	54	AO	LCD MIPI data 0 (-)	
MIPI_DSI_LN0P	55	AO	LCD MIPI data 0 (+)	
MIPI_DSI_LN1N	56	AO	LCD MIPI data 1 (-)	
MIPI_DSI_LN1P	57	AO	LCD MIPI data 1 (+)	
MIPI_DSI_LN2N	58	AO	LCD MIPI data 2 (-)	
MIPI_DSI_LN2P	59	AO	LCD MIPI data 2 (+)	
MIPI_DSI_LN3N	60	AO	LCD MIPI data 3 (-)	
MIPI_DSI_LN3P	61	AO	LCD MIPI data 3 (+)	

4-lane MIPI_DSI is needed for connection with 720P display. The following shows a reference circuit design, which takes the connection with LCM interface of LHR050H41-00 (IC: ILI9881C) from HUARUI Lighting as an example.

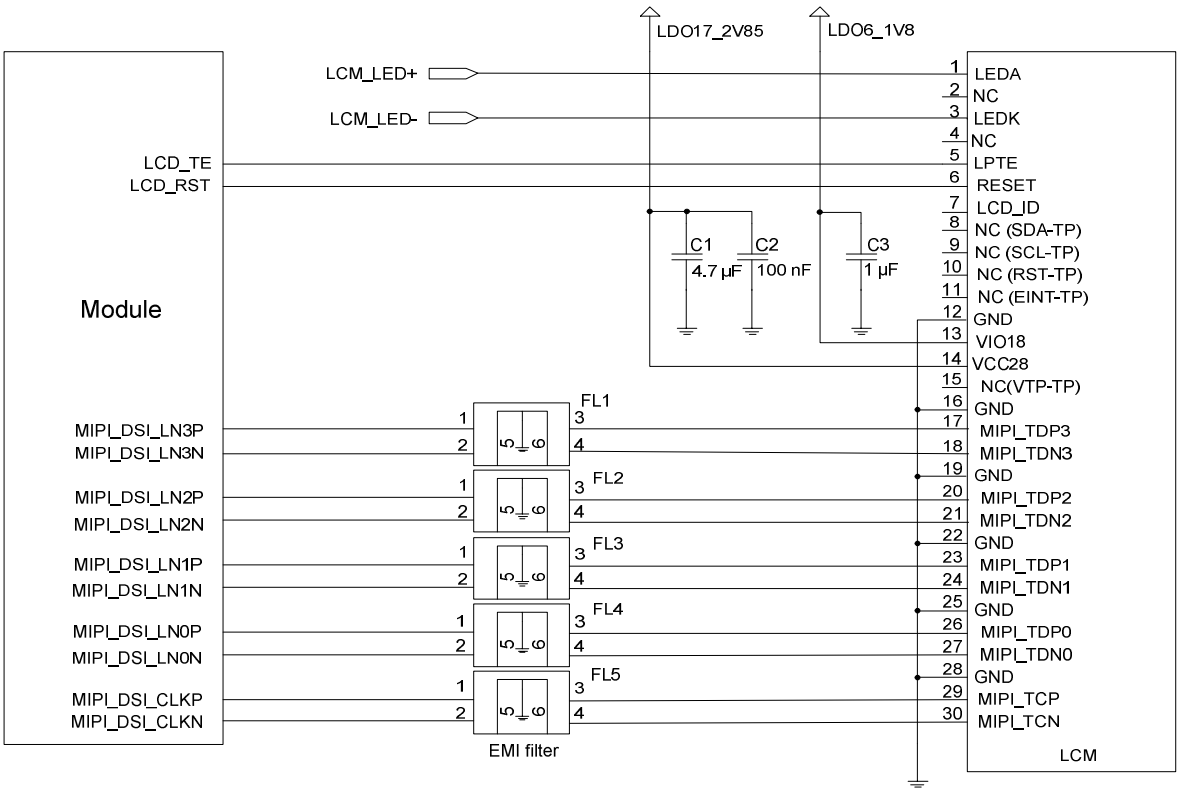

Figure 21: Reference Circuit Design for LCM Interface

MIPI are high speed signal lines. It is recommended that common-mode filters should be added in series near the LCM connector, to improve protection against electromagnetic radiation interference. ICMEF112P900MFR from ICT is recommended.
When compatible design with other displays is required, connect the LCD_ID pin of LCM to the module's ADC pin, and please note that the output voltage of LCD_ID cannot exceed the voltage range of ADC pin.

External backlight driving circuit needs to be designed for LCM, and a reference circuit design is shown in the following figure. Backlight brightness adjustment can be realized by PWM pin of SC20 series by adjusting the duty ratio.

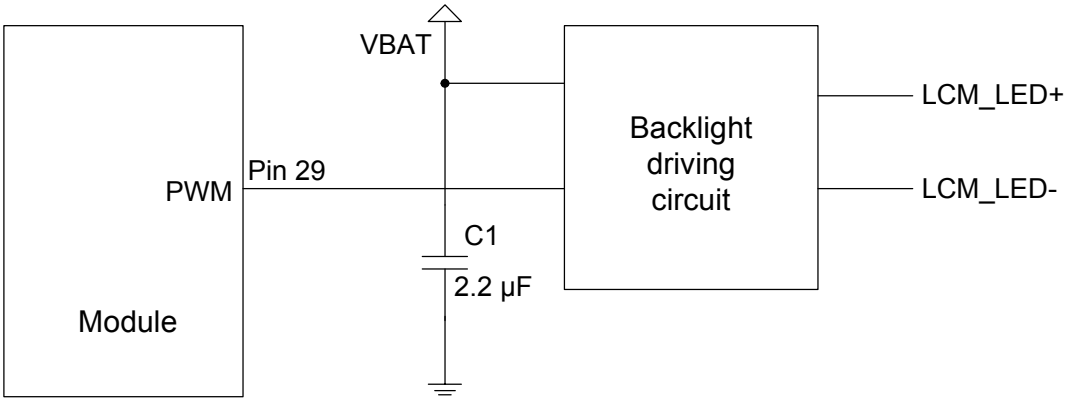

Figure 22: Reference Design for External Backlight Driving Circuit

3.19. Touch Panel Interface

SC20 series provides an I2C interface for connection with Touch Panel (TP), and it also provides the corresponding power supply and interrupt pins. The pin definition of TP interface is illustrated below.

Table 23: Pin Definition of Touch Panel Interface

Pin Name	Pin No.	I/O	Description	Comment
LDO6_1V8	125	PO	1.8 V output power supply for TP I/O power domain and I2C pull-up circuit	Vnom = 1.8 V $I_O$max = 100 mA
LDO17_2V85	129	PO	2.85 V output power supply for TP VDD	Vnom = 2.85 V $I_O$max = 300 mA
TP_INT	30	DI	TP interrupt	1.8 V power domain.
TP_RST	31	DO	TP reset	1.8 V power domain. Active low.
TP_I2C_SCL	47	OD	TP I2C clock	1.8 V power domain.
TP_I2C_SDA	48	OD	TP I2C data	1.8 V power domain.

The following illustrates a TP interface reference circuit, by taking the connection with TP interface of LHR050H41-00 (IC: GT9147) from HUARUI Lighting as an example.

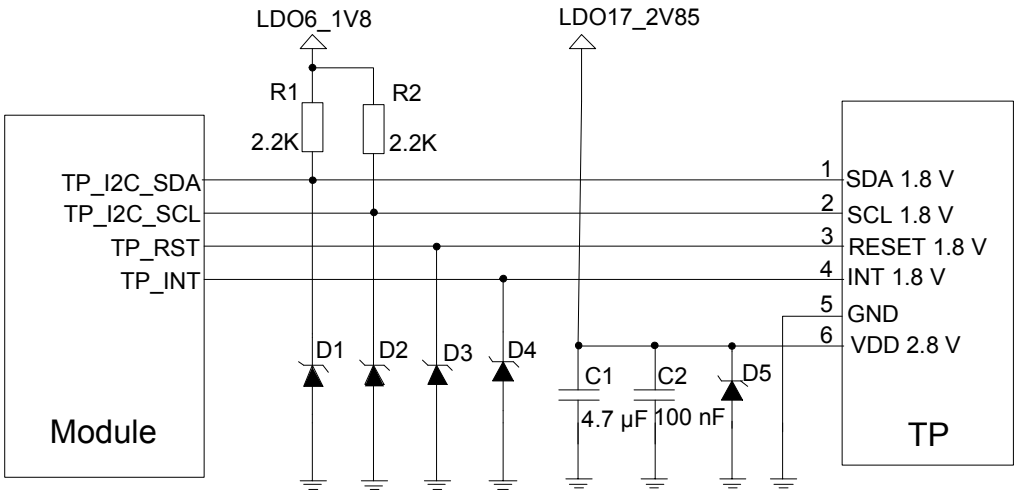

Figure 23: Reference Circuit Design for TP Interface

3.20. Camera Interfaces

Based on standard MIPI_CSI video input interface, SC20 series supports two cameras (2-lane + 1-lane), and the maximum pixel of the rear camera can be up to 8 MP. The video and photo quality are determined by various factors such as the camera sensor, camera lens quality, etc. It is recommended to select a proper camera model, according to the specification of cameras verified and recommended by Quectel.

The following models of camera sensors have been verified by Quectel:

- For rear camera: Hi843 of SK Hynix, T4KA3 of TOSHIBA
- For front camera: Hi259 of SK Hynix, SP2508 of SuperPix

3.20.1. Rear Camera Interface

The rear camera realizes transmission and control via its FPC and a connector which is connected to the module. The rear camera interface integrates a two-lane MIPI_CSI for differential data transmission, and it supports up to 8 MP camera.

The pin definition of rear camera interface is shown below.

Table 24: Pin Definition of Rear Camera Interface

Pin Name	Pin No.	I/O	Description	Comment
LDO6_1V8	125	PO	1.8 V output power supply for DOVDD of camera	Vnom = 1.8 V $I_O$max = 100 mA
LDO17_2V85	129	PO	2.85 V output power supply for AVDD of camera	Vnom = 2.85 V $I_O$max = 300 mA
MIPI_CSI0_CLKN	63	AI	Rear camera MIPI clock (-)	
MIPI_CSI0_CLKP	64	AI	Rear camera MIPI clock (+)	
MIPI_CSI0_LN0N	65	AI	Rear camera MIPI data 0 (-)	
MIPI_CSI0_LN0P	66	AI	Rear camera MIPI data 0 (+)	
MIPI_CSI0_LN1N	67	AI	Rear camera MIPI data 1 (-)	
MIPI_CSI0_LN1P	68	AI	Rear camera MIPI data 1 (+)	
CAM0_MCLK	74	DO	Clock of rear camera	

CAM0_RST	79	DO	Reset of rear camera
CAM0_PWD	80	DO	Power down of rear camera
CAM_I2C_SCL	83	OD	I2C clock of camera
CAM_I2C_SDA	84	OD	I2C data of camera

The following is a reference circuit design for rear camera interface, by taking the connection with T4KA3 camera as an example.

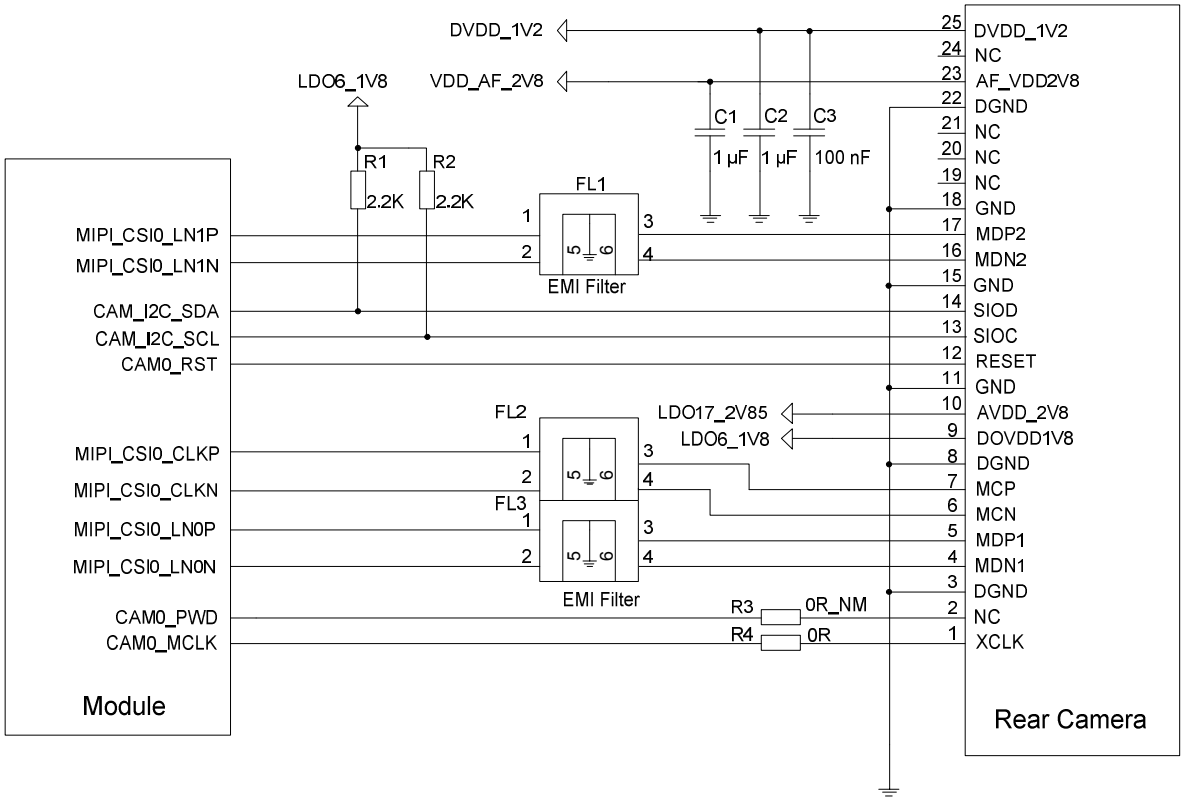

Figure 24: Reference Circuit Design for Rear Camera Interface

NOTE

DVDD_1V2 is used to power the rear camera core, and VDD_AF_2V8 is used to power the rear camera AF circuit. Both are powered by external LDOs.

3.20.2. Front Camera Interface

The front camera interface integrates a one-lane MIPI_CSI for differential data transmission, and it supports up to 2 MP camera.

The pin definition of front camera interface is shown below.

Table 25: Pin Definition of Front Camera Interface

Pin Name	Pin No.	I/O	Description	Comment
LDO6_1V8	125	PO	1.8 V output power supply for DOVDD of camera	Vnom = 1.8 V $I_O$max = 100 mA
LDO17_2V85	129	PO	2.85 V output power supply for AVDD of camera	Vnom = 2.85 V $I_O$max = 300 mA
MIPI_CSI1_CLKN	70	AI	Front camera MIPI clock (-)	
MIPI_CSI1_CLKP	71	AI	Front camera MIPI clock (+)	
MIPI_CSI1_LN0N	72	AI	Front camera MIPI data (-)	
MIPI_CSI1_LN0P	73	AI	Front camera MIPI data (+)	
CAM1_MCLK	75	DO	Clock of front camera	
CAM1_RST	81	DO	Reset of front camera	
CAM1_PWD	82	DO	Power down of front camera	
CAM_I2C_SCL	83	OD	I2C clock of camera	
CAM_I2C_SDA	84	OD	I2C data of camera	

The following is a reference circuit design for front camera interface, by taking the connection with SP2508 camera as an example.

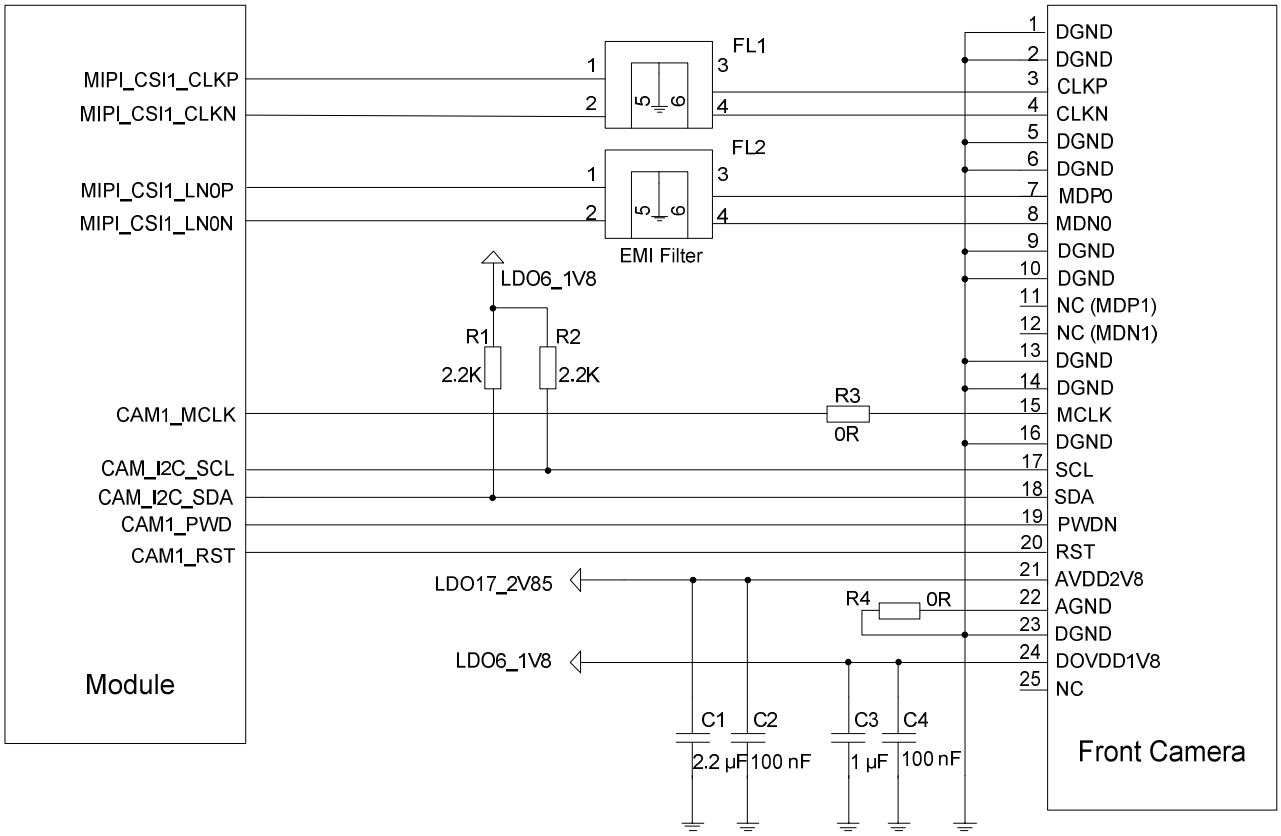

Figure 25: Reference Circuit Design for Front Camera Interface

3.20.3. Design Considerations

- Special attention should be paid to the definition of video device interfaces in schematic design. Different video devices will have varied definitions for their corresponding connectors. Ensure the device and the connectors are correctly connected.
- MIPI are high speed signal lines, supporting maximum data rate of up to 1.5 Gbps. The differential impedance should be controlled to 100 Ω. Additionally, it is recommended to route the traces on the inner layer of PCB, and do not cross them with other traces. For the same video device, keep all the MIPI traces of the same length. In order to avoid crosstalk, 1.5 times of the trace width is recommended to be maintained among MIPI signal lines. During impedance matching, do not connect GND on different planes to ensure impedance consistency.
- It is recommended to select a low-capacitance TVS for ESD protection and the recommended parasitic capacitance is below 1 pF.
- Route MIPI traces according to the following rules:
  a) The total trace length should not exceed 305 mm;
  b) Control the differential impedance as 100 Ω ±10 %;
  c) Control intra-lane length difference within 0.67 mm;
  d) Control inter-lane length difference within 1.3 mm.

Table 26: MIPI Trace Length Inside the Module

Pin No.	Pin Name	Length (mm)	Length Difference (P-N)
52	MIPI_DSI_CLKN	7.08	-0.63
53	MIPI_DSI_CLKP	6.45	
54	MIPI_DSI_LN0N	6.15	-0.30
55	MIPI_DSI_LN0P	5.85	
56	MIPI_DSI_LN1N	6.64	-0.04
57	MIPI_DSI_LN1P	6.60	
58	MIPI_DSI_LN2N	8.20	0.74
59	MIPI_DSI_LN2P	8.94	
60	MIPI_DSI_LN3N	9.28	0.96
61	MIPI_DSI_LN3P	10.24	
63	MIPI_CSI0_CLKN	10.55	0.54
64	MIPI_CSI0_CLKP	11.09	
65	MIPI_CSI0_LN0N	12.13	0.40
66	MIPI_CSI0_LN0P	12.53	
67	MIPI_CSI0_LN1N	13.73	0.76
68	MIPI_CSI0_LN1P	14.49	
70	MIPI_CSI1_CLKN	17.32	0.13
71	MIPI_CSI1_CLKP	17.45	
72	MIPI_CSI1_LN0N	18.89	0.35
73	MIPI_CSI1_LN0P	19.24	

3.21. Sensor Interfaces

SC20 series supports communication with sensors via an I2C interface, and it supports ALS/PS, compass,

gravity sensor, and gyroscopic sensors.

Verified sensor models by Quectel include: BST-BMA223, STK3311-WV, MPU-6881 and MMC35240PJ.

Table 27: Pin Definition of Sensor Interfaces

Pin Name	Pin No.	I/O	Description	Comment
SENSOR_I2C_SCL	91	OD	I2C clock for external sensor	1.8 V power domain.
SENSOR_I2C_SDA	92	OD	I2C data for external sensor	1.8 V power domain.
GPIO_88	99	DI	Gyroscope sensor interrupt 2	Default configuration. Including but not limited to these GPIO pins.
GPIO_89	100	DI	Gyroscope sensor interrupt 1	
GPIO_94	107	DI	Proximity sensor interrupt	
GPIO_36	108	DI	Compass sensor interrupt	
GPIO_65	109	DI	Gravity sensor interrupt 2	
GPIO_96	110	DI	Gravity sensor interrupt 1	

3.22. Audio Interfaces

SC20 series provides two analog input channels and three analog output channels. The following table shows the pin definition.

Table 28: Pin Definition of Audio Interfaces

Pin Name	Pin No.	I/O	Description	Comment
MIC1P	4	AI	Microphone input for channel 1 (+)	
MIC_GND	5		Microphone reference ground	
MIC2P	6	AI	Microphone input for headset (+)	
EARP	8	AO	Earpiece output (+)	
EARN	9	AO	Earpiece output (-)	

SPKP	10	AO	Speaker output (+)	
SPKN	11	AO	Speaker output (-)	
HPH_R	136	AO	Headphone right channel output	
HPH_GND	137	AI	Headphone reference ground	
HPH_L	138	AO	Headphone left channel output	
HS_DET	139	AI	Headset hot-plug detect	High level by default.

- The module offers two audio input channels which are both single-ended channels.
- The earpiece interface uses differential output.
- The loudspeaker interface uses differential output as well. The output channel is available with a Class-D amplifier whose output power is 879 mW when VBAT is 4.2 V and load is 8 Ω.
- The headphone interface features stereo left and right channel output, and supports headphone insertion detect.

3.22.1. Reference Circuit Design for Microphone Interface

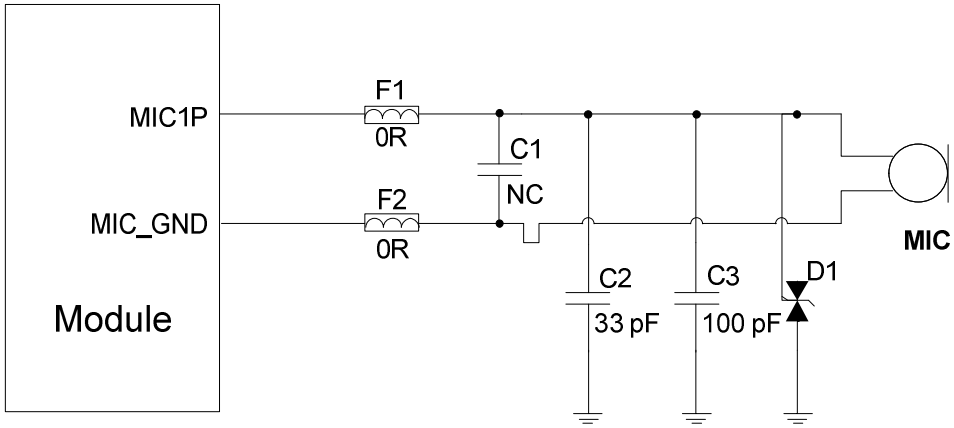

Figure 26: Reference Circuit Design for Microphone Interface

3.22.2. Reference Circuit Design for Earpiece Interface

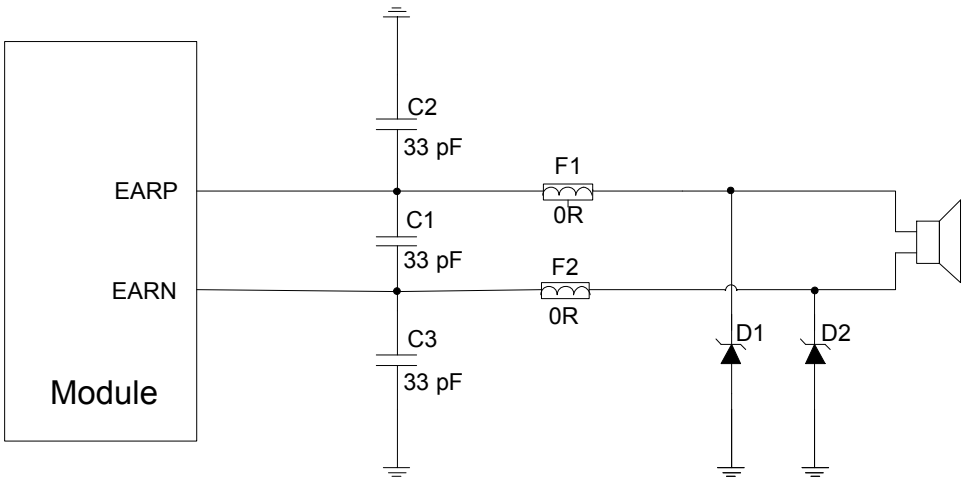

Figure 27: Reference Circuit Design for Earpiece Interface

3.22.3. Reference Circuit Design for Headphone Interface

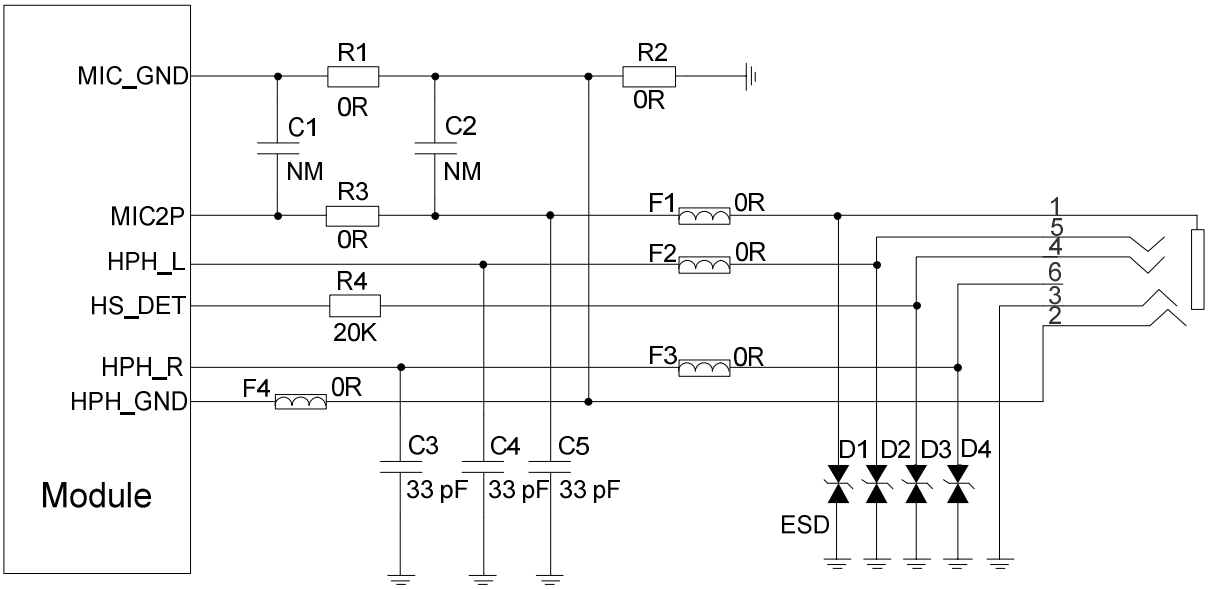

Figure 28: Reference Circuit Design for Headphone Interface

3.22.4. Reference Circuit Design for Loudspeaker Interface

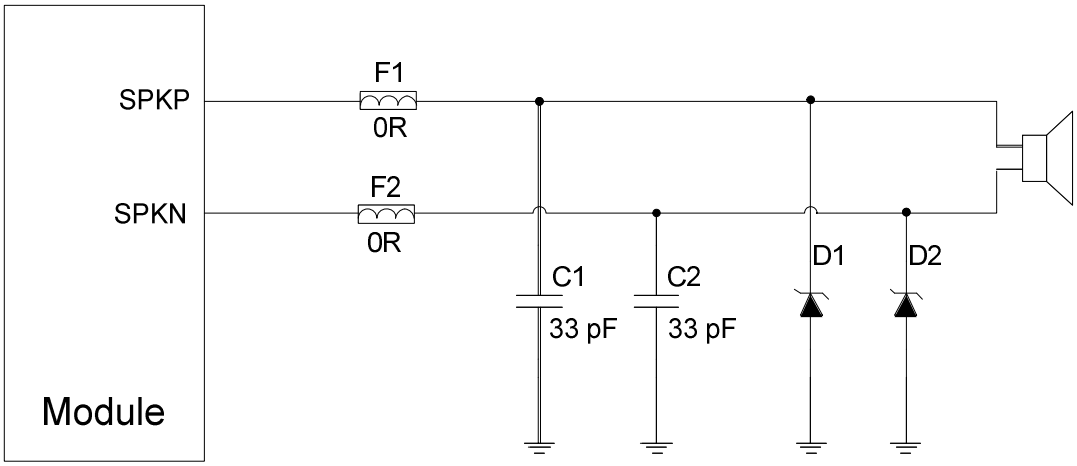

Figure 29: Reference Circuit Design for Loudspeaker Interface

3.22.5. Audio Interfaces Design Considerations

It is recommended to use the electret microphone with dual built-in capacitors (e.g. 10 pF and 33 pF) to filter out RF interference, thus reducing TDD noise. The 33 pF capacitor is applied to filter out RF interference when the module is transmitting at EGSM900. Without this capacitor, TDD noise could be heard during voice calls. The 10 pF capacitor is used to filter out RF interference at DCS1800. Please note that the resonant frequency point of a capacitor largely depends on its material and manufacturing technique. Therefore, you should consult the capacitor vendors to choose the most suitable capacitor to filter out the high-frequency noises.

The severity of RF interference in the voice channel during GSM transmitting largely depends on the application design. In some cases, EGSM900 TDD noise is more severe; while in other cases, DCS1800 TDD noise is more obvious. Therefore, you should select a suitable capacitor according to the test results. Sometimes, even no RF filtering capacitor is required.

The capacitor which is used for filtering out RF noise should be close to the audio device or audio interface. The trace should be as short as possible, and it is recommended to route the trace for capacitors first and then for other points.

In order to decrease radio or other signal interference, place RF antennas away from audio interfaces and audio traces. Additionally, keep power traces far away from the audio traces and do not route them in parallel.

Route the differential audio traces according to the differential signal layout rule.

3.23. Emergency Download Interface

USB_BOOT is an emergency download interface. You can force the module to enter emergency download mode by pulling it up to LDO5_1V8 during power-up. This is an emergency option when failures such as abnormal start-up or running occur. For firmware upgrade and debugging in the future, reserve the following reference design.

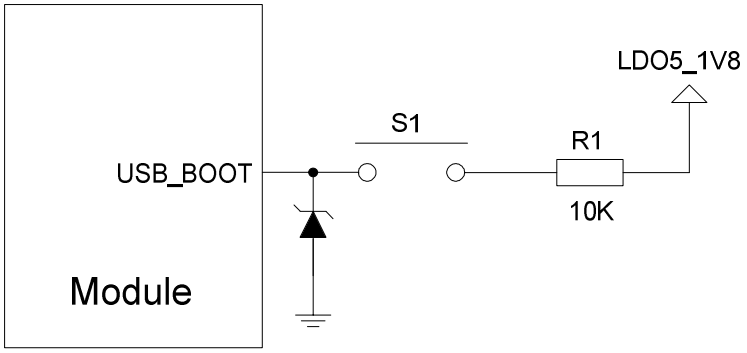

Figure 30: Reference Circuit Design for Emergency Download Interface

4 Wi-Fi and Bluetooth

SC20 series provides a shared antenna interface ANT_WIFI/BT for Wi-Fi and Bluetooth functions. The interface impedance is 50 Ω. External antennas such as PCB antenna, sucker antenna and ceramic antenna can be connected to the module via the interface to achieve Wi-Fi and Bluetooth functions.

4.1. Wi-Fi Overview

SC20 series module supports 2.4 GHz and 5 GHz dual-band WLAN wireless communication based on IEEE 802.11a/b/g/n standard protocols. The maximum data rate is up to 150 Mbps.

The features are as below:

- Supports Wake-on-WLAN (WoWLAN)
- Supports ad hoc mode
- Supports WAPI SMS4 hardware encryption
- Supports AP mode
- Supports Wi-Fi Direct
- Supports MCS 0–7 for HT20 and HT40

4.1.1. Wi-Fi Performance

The following table lists the Wi-Fi transmitting and receiving performance of SC20 series.

Table 29: Wi-Fi Transmitting Performance

	Standard	Rate	Output Power
2.4 GHz	802.11b	1 Mbps	16 dBm ±2.5 dB
	802.11b	11 Mbps	16 dBm ±2.5 dB
	802.11g	6 Mbps	16 dBm ±2.5 dB
	802.11g	54 Mbps	14 dBm ±2.5 dB
	802.11n HT20	MCS0	15 dBm ±2.5 dB

	802.11n HT20	MCS7	13 dBm ±2.5 dB
	802.11n HT40	MCS0	14 dBm ±2.5 dB
	802.11n HT40	MCS7	13 dBm ±2.5 dB

	Mode	Output Power
WLAN 5.2GHz	802.11a	11 dBm ±2 dB
	802.11n-HT20	12 dBm ±2 dB
	802.11n-HT40	11 dBm ±2.5 dB
WLAN 5.3GHz	802.11a	11 dBm ±2.5 dB
	802.11n-HT20	12 dBm ±2 dB
	802.11n-HT40	11 dBm ±2.5 dB
WLAN 5.3GHz	802.11a	11 dBm ±2 dB
	802.11n-HT20	11 dBm ±2.5 dB
	802.11n-HT40	10 dBm ±2.5 dB
WLAN 5.8GHz	802.11a	10 dBm ±2.5 dB
	802.11n-HT20	10 dBm ±2 dB
	802.11n-HT40	9 dBm ±2 dB

Table 30: Wi-Fi Receiving Performance

	Standard	Rate	Sensitivity
2.4 GHz	802.11b	1 Mbps	-96 dBm
	802.11b	11 Mbps	-87 dBm
	802.11g	6 Mbps	-91 dBm
	802.11g	54 Mbps	-74 dBm
	802.11n HT20	MCS0	-90 dBm

	802.11n HT20	MCS7	-72 dBm
	802.11n HT40	MCS0	-87 dBm
	802.11n HT40	MCS7	-68 dBm
5 GHz	802.11a	6 Mbps	-90 dBm
	802.11a	54 Mbps	-71 dBm
	802.11n HT20	MCS0	-88 dBm
	802.11n HT20	MCS7	-69 dBm
	802.11n HT40	MCS0	-86 dBm
	802.11n HT40	MCS7	-66 dBm

Referenced specifications are listed below:

- *IEEE 802.11n WLAN MAC and PHY, October 2009 + IEEE 802.11-2007 WLAN MAC and PHY, June 2007*
- *IEEE Std 802.11a, IEEE Std 802.11b, IEEE Std 802.11g: IEEE 802.11-2007 WLAN MAC and PHY, June 2007*

4.2. Bluetooth Overview

SC20 series supports Bluetooth 4.2 (BR/EDR + BLE) specification, as well as GFSK, 8-DPSK, π/4-DQPSK modulation modes.

- Maximally supports up to 7 wireless connections.
- Maximally supports up to 3.5 piconets at the same time.
- Supports one SCO or eSCO connection.

The BR/EDR channel bandwidth is 1 MHz, and can accommodate 79 channels. The BLE channel bandwidth is 2 MHz, and can accommodate 40 channels.

Table 31: Bluetooth Data Rate and Version

Version	Data rate	Maximum Application Throughput
1.2	1 Mbit/s	> 80 kbit/s

2.0 + EDR	3 Mbit/s	> 80 kbit/s
3.0 + HS	24 Mbit/s	Reference 3.0 + HS
4.2	24 Mbit/s	Reference 4.2 LE

Referenced specifications are listed below:

- *Bluetooth Radio Frequency TSS and TP Specification 1.2/2.0/2.0 + EDR/2.1/2.1+ EDR/3.0/3.0 + HS, August 6, 2009*
- *Bluetooth Low Energy RF PHY Test Specification, RF-PHY.TS/4.2.0, December 15, 2009*

4.2.1. Bluetooth Performance

The following table lists the Bluetooth transmitting and receiving performance of SC20 series.

Table 32: Bluetooth Transmitting and Receiving Performance

Transmitter Performance			
Packet Types	DH5	2-DH5	3-DH5
Transmitting Power	10 dBm ±2.5 dB	8 dBm ±2.5 dB	8 dBm ±2.5 dB
Receiver Performance			
Packet Types	DH5	2-DH5	3-DH5
Receiving Sensitivity	-93 dBm	-92 dBm	-86 dBm

5 GNSS

SC20 series integrates a IZat™ GNSS engine (GEN 8C) which supports multiple positioning and navigation systems including GPS/BeiDou/GLONASS or GPS/BeiDou/Galileo. With an embedded LNA, the module provides greatly improved positioning accuracy.

5.1. GNSS Performance

The following table lists the GNSS performance of the SC20 series in conduction mode.

Table 33: GNSS Performance

Parameter	Description	Typ.	Unit
Sensitivity	Cold start	-146	dBm
	Reacquisition	-157	dBm
	Tracking	-157	dBm
TTFF	Cold start	32	s
	Warm start	30	s
	Hot start	2	s
Static Drift	CEP-50	≤ 2.5	m

5.2. GNSS RF Design Guidelines

Bad design of antenna and layout may cause reduced GNSS receiving sensitivity, longer GNSS positioning time, or reduced positioning accuracy. In order to avoid this, follow the reference design rules as below:

- Maximize the distance between the GNSS RF part and the GPRS RF part (including trace routing and antenna layout) to avoid mutual interference.
- In user systems, place GNSS RF signal lines and RF components far away from high-speed circuits, switch-mode power supplies, power inductors, the clock circuit of single-chip microcomputers, etc.
- For applications with harsh electromagnetic environment or high ESD-protection requirements, it is recommended to add ESD protective diodes for the antenna interface. The junction capacitance of the diodes should be less than 0.5 pF. Otherwise, it will influence the impedance characteristic of RF circuit loop, or cause attenuation of bypass RF signals.
- Control the impedance of feeder lines and PCB traces to 50 Ω, and keep the trace as short as possible.
- See ***Chapter 6.3*** for reference circuit designs of GNSS antenna.

6 Antenna Interfaces

SC20 series provides four antenna interfaces for the main antenna, Rx-diversity antenna, GNSS antenna and Wi-Fi/Bluetooth antenna, respectively. The antenna ports have an impedance of 50 Ω.

6.1. Main/Rx-diversity Antenna Interfaces

The pin definition of main/Rx-diversity antenna interfaces is shown below.

Table 34: Pin Definition of Main/Rx-diversity Antenna Interfaces

Pin Name	Pin No.	I/O	Description	Comment
ANT_MAIN	87	AIO	Main antenna interface	50 Ω impedance
ANT_DRX	131	AI	Rx-diversity antenna interface	

6.1.1. Operating Frequency

Table 35: SC20-CE R1.1/-CEL R1.1 Operating Frequencies

3GPP Band	Receive	Transmit	Unit
EGSM900	925–960	880–915	MHz
DCS1800	1805–1880	1710–1785	MHz
WCDMA B1	2110–2170	1920–1980	MHz
WCDMA B8	925–960	880–915	MHz
EVDO/CDMA BC0	869–894	824–849	MHz
TD-SCDMA B34	2010–2025	2010–2025	MHz
TD-SCDMA B39	1880–1920	1880–1920	MHz

LTE-FDD B1	2110–2170	1920–1980	MHz
LTE-FDD B3	1805–1880	1710–1785	MHz
LTE-FDD B5	869–894	824–849	MHz
LTE-FDD B8	925–960	880–915	MHz
LTE-TDD B38	2570–2620	2570–2620	MHz
LTE-TDD B39	1880–1920	1880–1920	MHz
LTE-TDD B40	2300–2400	2300–2400	MHz
LTE-TDD B41 [9]	2555–2655	2555–2655	MHz

Table 36: SC20-E/-EL/-EX Operating Frequencies

3GPP Band	Receive	Transmit	Unit
GSM850	869–894	824–849	MHz
EGSM900	925–960	880–915	MHz
DCS1800	1805–1880	1710–1785	MHz
PCS1900	1930–1990	1850–1910	MHz
WCDMA B1	2110–2170	1920–1980	MHz
WCDMA B5	869–894	824–849	MHz
WCDMA B8	925–960	880–915	MHz
LTE-FDD B1	2110–2170	1920–1980	MHz
LTE-FDD B3	1805–1880	1710–1785	MHz
LTE-FDD B5	869–894	824–849	MHz
LTE-FDD B7	2620–2690	2500–2570	MHz
LTE-FDD B8	925–960	880–915	MHz
LTE-FDD B20	791–821	832–862	MHz

[9] The bandwidth of LTE-TDD B41 for SC20-CE R1.1/-CEL R1.1 and SC20-E/-EL is 100 MHz (2555–2655 MHz), and the corresponding channel range is 40240–41240.

LTE-TDD B38	2570–2620	2570–2620	MHz
LTE-TDD B40	2300–2400	2300–2400	MHz
LTE-TDD B41 [10]	2555–2655	2555–2655	MHz

Table 37: SC20-A/-AL/-AX Operating Frequencies

3GPP Band	Receive	Transmit	Unit
GSM850	869–894	824–849	MHz
PCS1900	1930–1990	1850–1910	MHz
WCDMA B1	2110–2170	1920–1980	MHz
WCDMA B2	1930–1990	1850–1910	MHz
WCDMA B4	2110–2155	1710–1755	MHz
WCDMA B5	869–894	824–849	MHz
WCDMA B8	925–960	880–915	MHz
LTE-FDD B2	1930–1990	1850–1910	MHz
LTE-FDD B4	2110–2155	1710–1755	MHz
LTE-FDD B5	869–894	824–849	MHz
LTE-FDD B7	2620–2690	2500–2570	MHz
LTE-FDD B12	729–746	699–716	MHz
LTE-FDD B13	746–756	777–787	MHz
LTE-FDD B25	1930–1995	1850–1915	MHz
LTE-FDD B26	859–894	814–849	MHz

[10] The bandwidth of LTE-TDD B41 for SC20-EX is 200 MHz (2496–2690 MHz), and the corresponding channel range is 39650–41589.

Table 38: SC20-AU/-AUL Operating Frequencies

3GPP Band	Receive	Transmit	Unit
GSM850	869–894	824–849	MHz
EGSM900	925–960	880–915	MHz
DCS1800	1805–1880	1710–1785	MHz
PCS1900	1930–1990	1850–1910	MHz
WCDMA B1	2110–2170	1920–1980	MHz
WCDMA B2	1930–1990	1850–1910	MHz
WCDMA B5	869–894	824–849	MHz
WCDMA B8	925–960	880–915	MHz
LTE-FDD B1	2110–2170	1920–1980	MHz
LTE-FDD B3	1805–1880	1710–1785	MHz
LTE-FDD B5	869–894	824–849	MHz
LTE-FDD B7	2620–2690	2500–2570	MHz
LTE-FDD B8	925–960	880–915	MHz
LTE-FDD B28	758–803	703–748	MHz
LTE-TDD B40	2300–2400	2300–2400	MHz

Table 39: SC20-J/-JL Operating Frequencies

3GPP Band	Receive	Transmit	Unit
WCDMA B1	2110–2170	1920–1980	MHz
WCDMA B6	875–885	830–840	MHz
WCDMA B8	925–960	880–915	MHz
WCDAM B19	875–890	830–845	MHz
LTE-FDD B1	2110–2170	1920–1980	MHz
LTE-FDD B3	1805–1880	1710–1785	MHz

LTE-FDD B8	925–960	880–915	MHz
LTE-FDD B18	860–875	815–830	MHz
LTE-FDD B19	875–890	830–845	MHz
LTE-FDD B26	859–894	814–849	MHz
LTE-TDD B41 [11]	2545–2655	2545–2655	MHz

Table 40: SC20-EU Module Operating Frequencies

3GPP Band	Receive	Transmit	Unit
GSM850	869–894	824–849	MHz
EGSM900	925–960	880–915	MHz
DCS1800	1805–1880	1710–1785	MHz
PCS1900	1930–1990	1850–1910	MHz
WCDMA B1	2110–2170	1920–1980	MHz
WCDMA B2	1930–1990	1850–1910	MHz
WCDMA B5	869–894	824–849	MHz
WCDMA B8	925–960	880–915	MHz
LTE-FDD B1	2110–2170	1920–1980	MHz
LTE-FDD B2	1930–1990	1850–1910	MHz
LTE-FDD B3	1805–1880	1710–1785	MHz
LTE-FDD B5	869–894	824–849	MHz
LTE-FDD B7	2620–2690	2500–2570	MHz
LTE-FDD B8	925–960	880–915	MHz
LTE-FDD B20	791–821	832–862	MHz
LTE-FDD B28A	758–788	703–733	MHz
LTE-TDD B38	2570–2620	2570–2620	MHz

[11] The bandwidth of LTE-TDD B41 for SC20-J/-JL is 110 MHz (2545–2655 MHz), and the corresponding channel range is 40140–41240.

6.1.2. Main and Rx-diversity Antenna Interfaces Reference Design

A reference circuit design for main and Rx-diversity antenna interfaces is shown below. Reserve a π-type matching circuit for each antenna to achieve better RF performance, and place the π-type matching components (R1/C1/C2, R2/C3/C4) as close to the antennas as possible. The capacitors are not mounted by default and the resistors are 0 Ω.

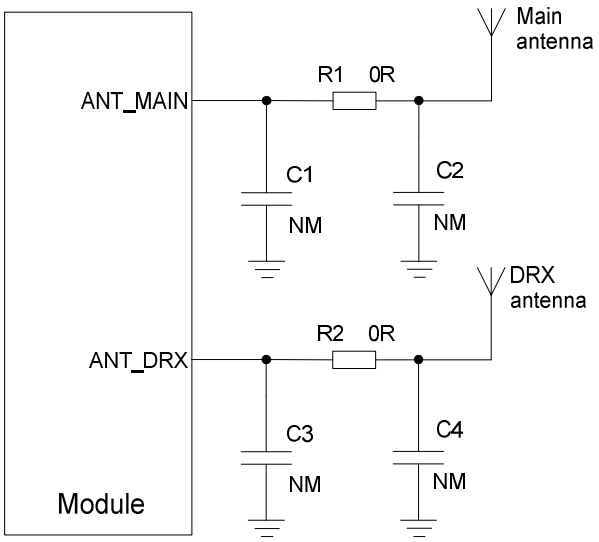

Figure 31: Reference Circuit Design for Main and Rx-diversity Antenna Interfaces

6.2. Wi-Fi/Bluetooth Antenna Interface

The following tables show the pin definition and frequency specification of the Wi-Fi/Bluetooth antenna interface.

Table 41: Pin Definition of Wi-Fi/Bluetooth Antenna Interface

Pin Name	Pin No.	I/O	Description	Comment
ANT_WIFI/BT	77	AIO	Wi-Fi/Bluetooth antenna interface	50 Ω impedance

Table 42: Wi-Fi/Bluetooth Frequency

Type	Frequency	Unit
802.11a/b/g/n	2400–2482	MHz

	5180–5825	
Bluetooth 4.2 LE	2402–2480	MHz

NOTE

The supported Wi-Fi frequencies of SC20-J/-JL are 2400–2496 MHz and 5180–5825 MHz.

A reference circuit design for Wi-Fi/Bluetooth antenna interface is shown as below. A π-type matching circuit should be reserved for better RF performance. The π-type matching components (R1, C1, C2) should be placed as close to the antenna as possible and are mounted according to the actual debugging. C1 and C2 are not mounted by default and the resistor is 0 Ω.

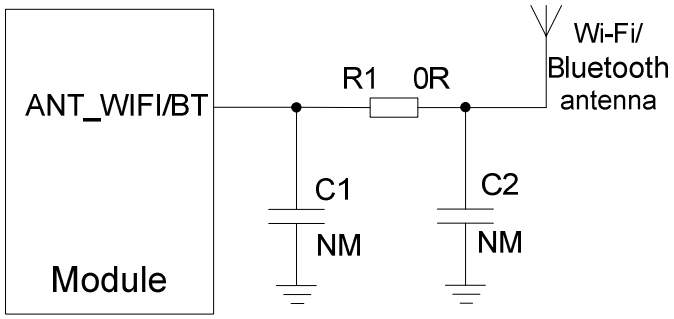

Figure 32: Reference Circuit Design for Wi-Fi/Bluetooth Antenna

6.3. GNSS Antenna Interface

The following tables show pin definition and frequency specification of the GNSS antenna interface.

Table 43: Pin Definition of GNSS Antenna Interface

Pin Name	Pin No.	I/O	Description	Comment
ANT_GNSS	121	AI	GNSS antenna interface	50 Ω impedance

Table 44: GNSS Frequency

Type	Frequency	Unit
GPS/Galileo	1575.42 ±1.023	MHz
GLONASS	1597.5–1605.8	MHz
BeiDou	1561.098 ±2.046	MHz

6.3.1. Recommended Circuit for Passive Antenna

GNSS antenna interface supports passive ceramic antennas and other types of passive antennas. A reference circuit design is given below.

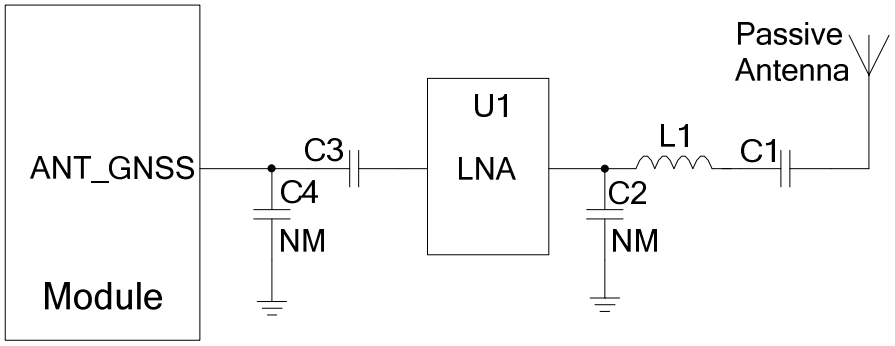

Figure 33: Reference Circuit Design for GNSS Passive Antenna

NOTE

When the passive antenna is placed far away from the module (that is, the antenna trace is long), it is recommended to add an external LNA circuit for better GNSS receiving performance, and the LNA should be placed close to the antenna.

6.3.2. Recommended Circuit for Active Antenna

The active antenna is powered by a 56 nH inductor through the antenna's signal path. The common power supply voltage ranges from 3.3 V to 5.0 V. Despite its low power consumption, the active antenna still requires stable and clean power supplies. Therefore, it is recommended to use high-performance LDO as the power supply. A reference design for GNSS active antenna is shown below.

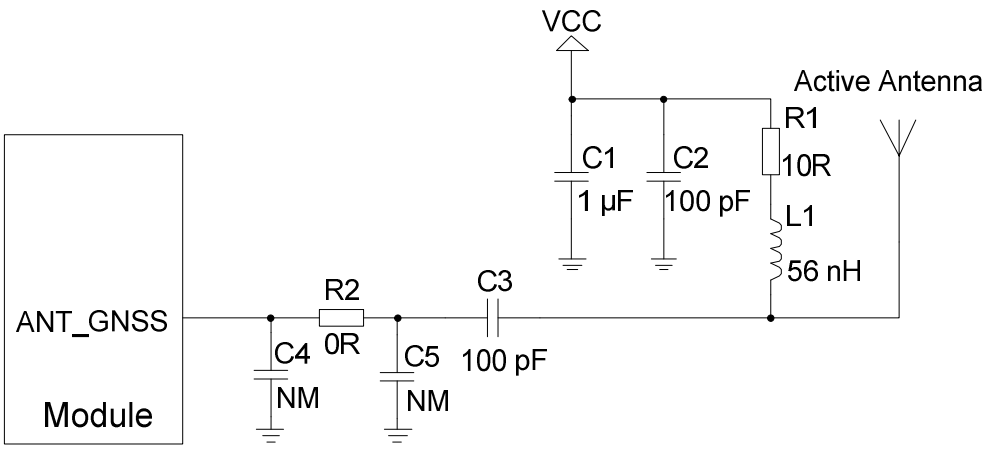

Figure 34: Reference Circuit Design for GNSS Active Antenna

6.4. Reference Design for RF Layout

For user's PCB, the characteristic impedance of all RF traces should be controlled to 50 Ω. The impedance of the RF traces is usually determined by the trace width (W), the materials' dielectric constant, the height from the reference ground to the signal layer (H), and the spacing between RF traces and grounds (S). Microstrip or coplanar waveguide is typically used in RF layout to control characteristic impedance. The following are reference designs of microstrip or coplanar waveguide with different PCB structures.

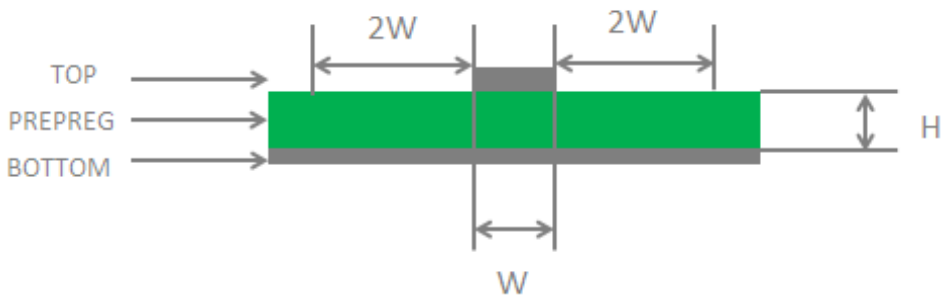

Figure 35: Microstrip Design on a 2-layer PCB

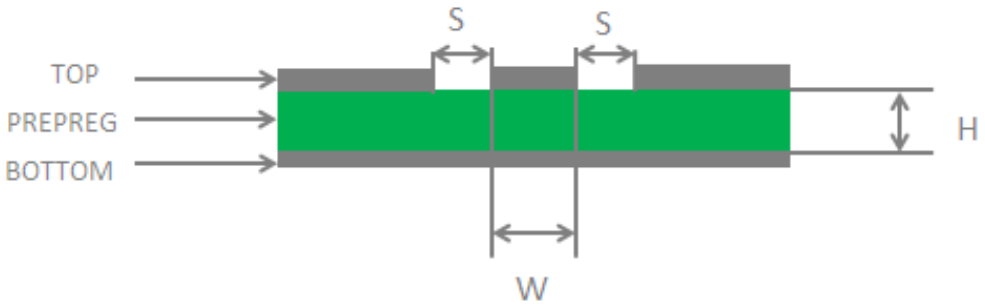

Figure 36: Coplanar Waveguide Design on a 2-layer PCB

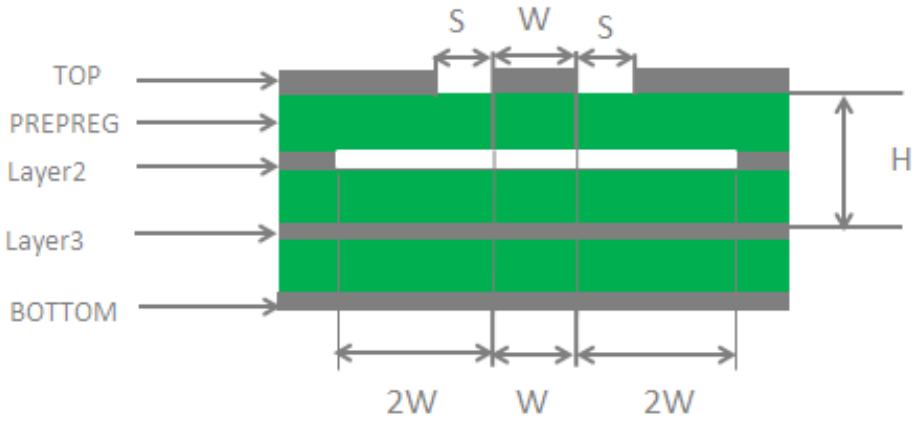

Figure 37: Coplanar Waveguide Design on a 4-layer PCB (Layer 3 as Reference Ground)

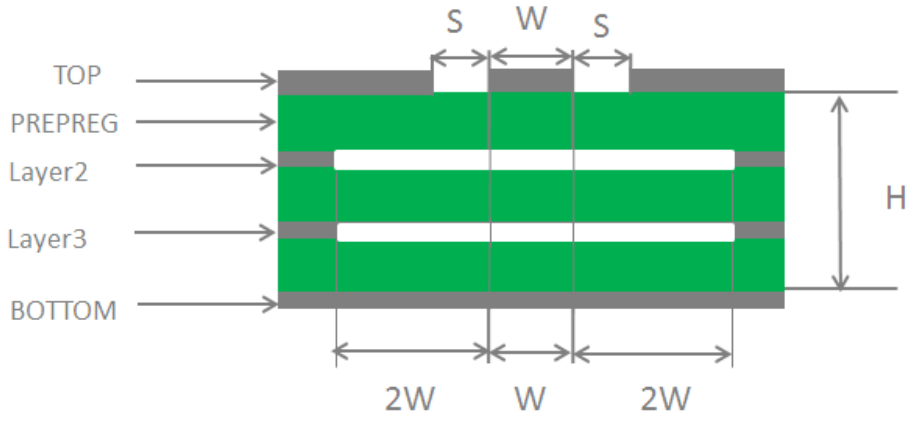

Figure 38: Coplanar Waveguide Design on a 4-layer PCB (Layer 4 as Reference Ground)

In order to ensure RF performance and reliability, follow the principles below in RF layout design:

- Use an impedance simulation tool to accurately control the characteristic impedance of RF traces to 50 Ω.
- Design the GND pins adjacent to RF pins as thermal relief pads, and fully connect them to ground.
- Keep the distance between the RF pins and the RF connector as short as possible. Change all the right-angle traces to curved ones and the recommended trace angle is 135°.
- Reserve clearance under the signal pin of the antenna connector or solder joint.
- Keep the reference ground of RF traces complete. Meanwhile, add some ground vias around RF traces and the reference ground to improve RF performance. The distance between the ground vias and RF traces should be no less than two times the width of RF signal traces (2 × W).
- Keep RF traces away from interference sources, and avoid intersection and paralleling between traces on adjacent layers.

For more details about RF layout, see ***document [3]***.

6.5. Antenna Installation

6.5.1. Antenna Requirements

The following table shows the requirement on the main antenna, RX-diversity antenna, Wi-Fi/Bluetooth antenna and a GNSS antenna.

Table 45: Antenna Requirements

Type	Requirements
GSM/WCDMA/TD-SCDMA/ LTE	VSWR: ≤ 2 Gain: GSM900: 2.38dBi GSM1800: 1.33dBi WCDMA Band 1/LTE Band 1: 1.53dBi WCDMA Band 8/LTE Band 8: 2.98dBi LTE Band 3: 2.0dBi LTE Band 7: 3.0dBi LTE Band 20: 2.64dBi LTE Band 38: 2.3dBi LTE Band 40: 1.88dBi LTE Band 41: 3.6dBi Max Input Power: 50 W Input Impedance: 50 Ω Polarization Type: Vertical

	Cable Insertion Loss: < 1 dB (GSM850, EGSM900, WCDMA B5/B6/B8/B19, EVDO/CDMA BC0, LTE-FDD B5/B8/B12/B13/B18/B19/B20/B26/B28) Cable Insertion Loss: < 1.5 dB (DCS1800, PCS1900, WCDMA B1/B2/B4, TD-SCDMA B34/B39, LTE-FDD B1/B2/B3/B4/B25, LTE-TDD B39) Cable Insertion Loss: < 2 dB (LTE-FDD B7, LTE-TDD B38/B40/B41)
Wi-Fi/Bluetooth	VSWR: ≤ 2 Gain: Bluetooth/WLAN 2.4G Antenna:0.47dBi WLAN 5.2G Antenna: -0.67 dBi WLAN 5.3G Antenna: -0.19 dBi WLAN 5.5G Antenna: 1.28 dBi WLAN 5.8G Antenna: 1.10 dBi Max Input Power: 50 W Input Impedance: 50 Ω Polarization Type: Vertical Cable Insertion Loss: < 1 dB
GNSS [12]	Frequency range: 1559–1609 MHz Polarization: RHCP or linear VSWR: < 2 (Typ.) Passive Antenna Gain: > 0 dBi Active Antenna Noise Figure: < 1.5 dB (Typ.) Active Antenna Gain: > -2 dBi Active Antenna Embedded LNA Gain: < 17 dB (Typ.) Active Antenna Total Gain: < 17 dBi (Typ.)

6.5.2. Recommended RF Connector for Antenna Installation

If an RF connector is used for antenna connection, it is recommended to use the U.FL-R-SMT connector provided by HIROSE.

[12] It is recommended to use a passive GNSS antenna when LTE B13 or B14 is supported, as the use of active antenna may generate harmonics which will affect the GNSS performance.

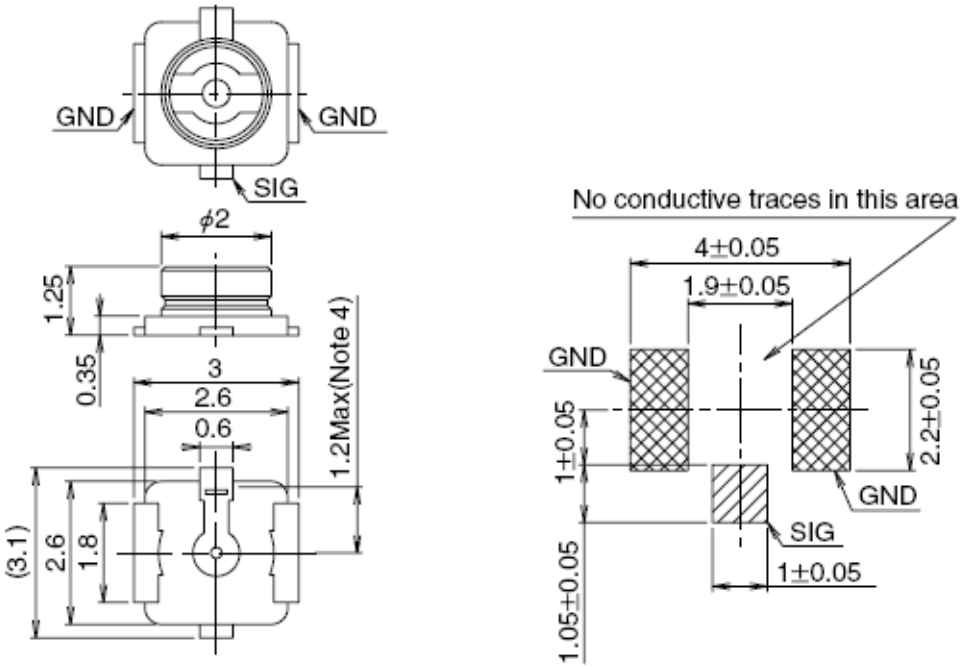

Figure 39: Dimensions of the U.FL-R-SMT Connector (Unit: mm)

U.FL-LP serial connectors listed in the following figure can be used to match the U.FL-R-SMT.

	U.FL-LP-040	U.FL-LP-066	U.FL-LP(V)-040	U.FL-LP-062	U.FL-LP-088
Part No.	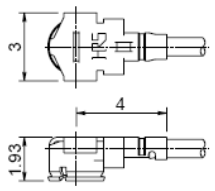	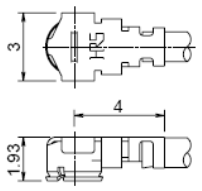	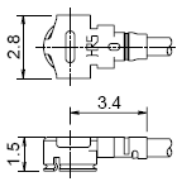	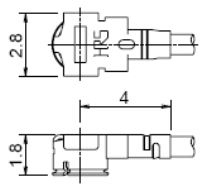	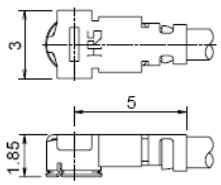
Mated Height	2.5mm Max. (2.4mm Nom.)	2.5mm Max. (2.4mm Nom.)	2.0mm Max. (1.9mm Nom.)	2.4mm Max. (2.3mm Nom.)	2.4mm Max. (2.3mm Nom.)
Applicable cable	Dia. 0.81mm Coaxial cable	Dia. 1.13mm and Dia. 1.32mm Coaxial cable	Dia. 0.81mm Coaxial cable	Dia. 1mm Coaxial cable	Dia. 1.37mm Coaxial cable
Weight (mg)	53.7	59.1	34.8	45.5	71.7
RoHS	YES				

Figure 40: Mechanicals of U.FL-LP Connectors

The following figure describes the space factor of the mated connector.

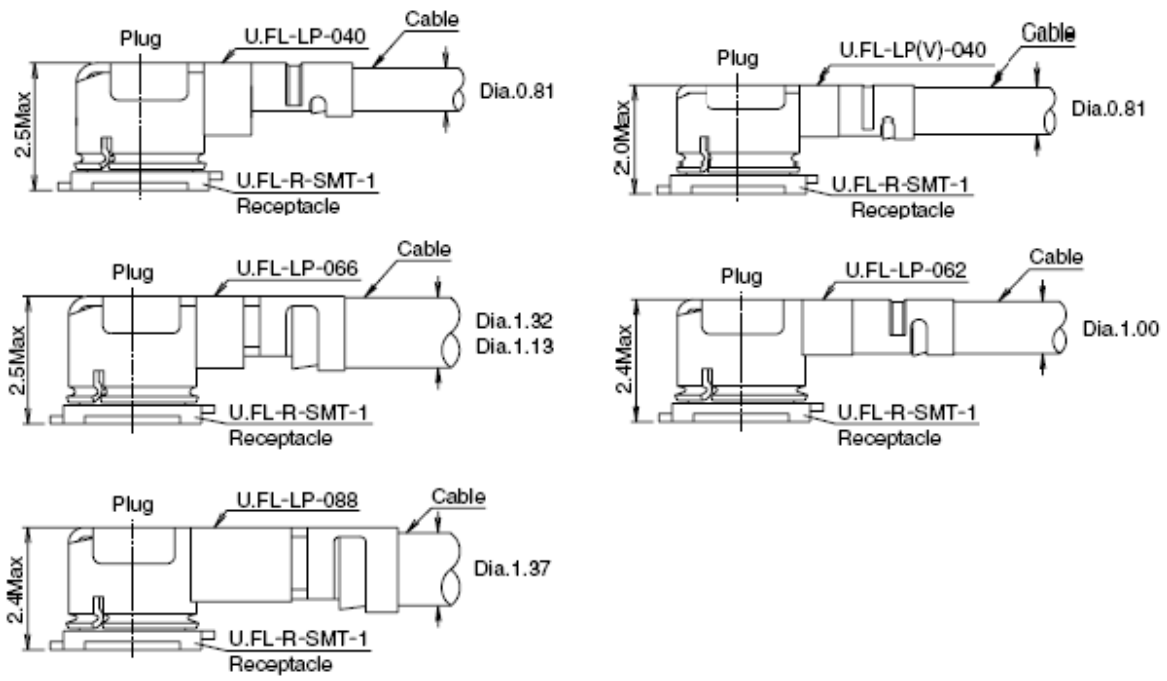

Figure 41: Space Factor of Mated Connectors (Unit: mm)

For more details, visit http://www.hirose.com.

7 Reliability, Radio and Electrical Characteristics

7.1. Absolute Maximum Ratings

Absolute maximum ratings for power supply and voltage on digital and analog pins of the module are listed in the following table.

Table 46: Absolute Maximum Ratings

Parameter	Min.	Max.	Unit
VBAT	-0.5	6	V
USB_VBUS	-0.5	16	V
Peak Current of VBAT	0	3	A
Voltage on Digital Pins	-0.3	2.3	V

7.2. Power Supply Ratings

Table 47: Module Power Supply Ratings

Parameter	Description	Conditions	Min.	Typ.	Max.	Unit
VBAT	VBAT	The actual input voltages must stay between the minimum and maximum values.	3.5	3.8	4.2	V
	Voltage drop during transmitting burst	Maximum power control level at EGSM900.	-	-	400	mV

I_{VBAT}	Peak supply current (during transmission slot)	Maximum power control level at EGSM900.	-	1.8	3.0	A
USB_VBUS	USB detection		4.35	5.0	6.3	V
VRTC	Power supply voltage of the backup battery		2.0	3.0	3.25	V

7.3. Charging Performance Specifications

Table 48: Charging Performance Specifications

Parameter	Min.	Typ.	Max.	Unit
Trickle charging-A current	81	90	99	mA
Trickle charging-A threshold voltage range (15.62 mV steps)	2.5	2.796	2.984	V
Trickle charging-B threshold voltage range (18.75 mV steps)	3.0	3.2	3.581	V
Charge voltage range (25 mV steps)	4	4.2	4.775	V
Charge voltage accuracy	-	-	±2	%
Charge current range (90 mA steps)	90	-	1440	mA
Charge current accuracy	-	-	±10	%
Charge termination current: when the charge current is from 90 mA to 450 mA	-	7	-	%
Charge termination current: when charge current is from 450 mA to 1440 mA	-	7.4	-	%

7.4. Operating and Storage Temperatures

The operating temperature is listed in the following table.

Table 49: Operating and Storage Temperatures

Parameter	Min.	Typ.	Max.	Unit
Operating temperature range [13]	-35	+25	+75	ºC
Storage Temperature Range	-40	-	+90	ºC

7.5. Power Consumption

The values of current consumption are shown below.

Table 50: SC20-CE R1.1/-CEL R1.1 Current Consumption

Description	Conditions	Typ.	Unit
OFF state	Power down	20	μA
GSM/GPRS supply current	Sleep (USB disconnected) @ DRX = 2	3.85	mA
	Sleep (USB disconnected) @ DRX = 5	3.01	mA
	Sleep (USB disconnected) @ DRX = 9	2.91	mA
WCDMA supply current	Sleep (USB disconnected) @ DRX = 6	3.30	mA
	Sleep (USB disconnected) @ DRX = 7	2.79	mA
	Sleep (USB disconnected) @ DRX = 8	2.49	mA
	Sleep (USB disconnected) @ DRX = 9	2.33	mA
LTE-FDD	Sleep (USB disconnected)	5.60	mA

[13] Within the operating temperature range, the module is 3GPP compliant.

supply current	@ DRX = 5		
	Sleep (USB disconnected) @ DRX = 6	3.83	mA
	Sleep (USB disconnected) @ DRX = 7	3.02	mA
	Sleep (USB disconnected) @ DRX = 8	2.65	mA
LTE-TDD supply current	Sleep (USB disconnected) @ DRX = 5	5.49	mA
	Sleep (USB disconnected) @ DRX = 6	3.87	mA
	Sleep (USB disconnected) @ DRX = 7	3.05	mA
	Sleep (USB disconnected) @ DRX = 8	2.67	mA
GSM voice call	EGSM900 PCL = 5 @ 31.84 dBm	290	mA
	EGSM900 PCL = 12 @ 18.49 dBm	150	mA
	EGSM900 PCL = 19 @ 4.95 dBm	104	mA
	DCS1800 PCL = 0 @ 28.91 dBm	220	mA
	DCS1800 PCL = 7 @ 15.35 dBm	150	mA
	DCS1800 PCL = 15 @ -0.21 dBm	120	mA
EVDO/CDMA voice call	BC0 (max power) @ 23.91 dBm	560	mA
	BC0 (min power) @ -60.28 dBm	190	mA
WCDMA voice call	B1 (max power) @ 22.61 dBm	560	mA
	B8 (max power) @ 22.74 dBm	580	mA
EDGE data transfer	EGSM900 (1UL/4DL) @ 26.29 dBm	220	mA
	EGSM900 (2UL/3DL) @ 26.15 dBm	330	mA
	EGSM900 (3UL/2DL) @ 26.06 dBm	420	mA
	EGSM900 (4UL/1DL) @ 25.92 dBm	530	mA
	DCS1800 (1UL/4DL) @ 24.89 dBm	180	mA

	DCS1800 (2UL/3DL) @ 24.74 dBm	270	mA
	DCS1800 (3UL/2DL) @ 24.54 dBm	360	mA
	DCS1800 (4UL/1DL) @ 24.44 dBm	450	mA
EVDO/CDMA data transfer	BC0 (max power) @ 23.68 dBm	560	mA
WCDMA data transfer	B1 (HSDPA) @ 21.64 dBm	540	mA
	B8 (HSDPA) @ 21.61 dBm	540	mA
	B1 (HSUPA) @ 21.36 dBm	560	mA
	B8 (HSUPA) @ 21.56 dBm	550	mA
LTE data transfer	LTE-FDD B1 @ 22.96 dBm	750	mA
	LTE-FDD B3 @ 22.95 dBm	700	mA
	LTE-FDD B5 @ 22.90 dBm	680	mA
	LTE-FDD B8 @ 23.17 dBm	680	mA
	LTE-TDD B38 @ 22.02 dBm	400	mA
	LTE-TDD B39 @ 22.13 dBm	410	mA
	LTE-TDD B40 @ 22.01 dBm	410	mA
	LTE-TDD B41 @ 22.31 dBm	400	mA

Table 51: SC20-E/-EL Current Consumption

Description	Conditions	Typ.	Unit
OFF state	Power down	20	μA
GSM/GPRS supply current	Sleep (USB disconnected) @ DRX = 2	3.58	mA
	Sleep (USB disconnected) @ DRX = 5	2.46	mA
	Sleep (USB disconnected) @ DRX = 9	2.13	mA
WCDMA supply current	Sleep (USB disconnected) @ DRX = 6	2.99	mA

	Sleep (USB disconnected) @ DRX = 7	2.35	mA
	Sleep (USB disconnected) @ DRX = 8	2.01	mA
	Sleep (USB disconnected) @ DRX = 9	1.85	mA
LTE-FDD supply current	Sleep (USB disconnected) @ DRX = 5	5.51	mA
	Sleep (USB disconnected) @ DRX = 6	3.56	mA
	Sleep (USB disconnected) @ DRX = 7	2.62	mA
	Sleep (USB disconnected) @ DRX = 8	2.14	mA
LTE-TDD supply current	Sleep (USB disconnected) @ DRX = 5	5.93	mA
	Sleep (USB disconnected) @ DRX = 6	3.74	mA
	Sleep (USB disconnected) @ DRX = 7	2.70	mA
	Sleep (USB disconnected) @ DRX = 8	2.17	mA
GSM voice call	GSM850 PCL = 5 @ 33.13 dBm	263.8	mA
	GSM850 PCL = 12 @ 19.15 dBm	134.7	mA
	GSM850 PCL = 19 @ 5.31 dBm	109.2	mA
	EGSM900 PCL = 5 @ 33.07 dBm	271.2	mA
	EGSM900 PCL = 12 @ 19.53 dBm	137.3	mA
	EGSM900 PCL = 19 @ 5.59 dBm	110.6	mA
	DCS1800 PCL = 0 @ 30.00 dBm	203.0	mA
	DCS1800 PCL = 7 @ 16.45 dBm	150.7	mA
	DCS1800 PCL = 15 @ 0.67 dBm	130.8	mA
	PCS1900 PCL = 0 @ 29.72 dBm	195.9	mA

	PCS1900 PCL = 7 @ 16.72 dBm	151.3	mA
	PCS1900 PCL = 15 @ 0.98 dBm	130.0	mA
WCDMA voice call	B1 (max power) @ 23.18 dBm	544.1	mA
	B5 (max power) @ 23.22 dBm	513.5	mA
	B8 (max power) @ 23.29 dBm	522.7	mA
GPRS data transfer	GSM850 (1UL/4DL) @ 33.12 dBm	265.9	mA
	GSM850 (2UL/3DL) @ 33.02 dBm	435.1	mA
	GSM850 (3UL/2DL) @ 30.50 dBm	478.8	mA
	GSM850 (4UL/1DL) @ 29.49 dBm	564.0	mA
	EGSM900 (1UL/4DL) @ 33.10 dBm	272.7	mA
	EGSM900 (2UL/3DL) @ 33.00 dBm	445.0	mA
	EGSM900 (3UL/2DL) @ 30.96 dBm	512.0	mA
	EGSM900 (4UL/1DL) @ 29.93 dBm	599.2	mA
	DCS1800 (1UL/4DL) @ 29.96 dBm	205.8	mA
	DCS1800 (2UL/3DL) @ 29.86 dBm	314.3	mA
	DCS1800 (3UL/2DL) @ 29.73 dBm	420.8	mA
	DCS1800 (4UL/1DL) @ 29.63 dBm	531.7	mA
	PCS1900 (1UL/4DL) @ 29.77 dBm	199.3	mA
	PCS1900 (2UL/3DL) @ 29.64 dBm	307.2	mA
	PCS1900 (3UL/2DL) @ 29.54 dBm	411.5	mA
	PCS1900 (4UL/1DL) @ 29.34 dBm	518.7	mA
EDGE data transfer	GSM850 (1UL/4DL) @ 26.75 dBm	172.2	mA
	GSM850 (2UL/3DL) @ 27.13 dBm	266.6	mA
	GSM850 (3UL/2DL) @ 26.63 dBm	353.1	mA
	GSM850 (4UL/1DL) @ 26.54 dBm	446.9	mA

	EGSM900 (1UL/4DL) @ 27.05 dBm	182	mA
	EGSM900 (2UL/3DL) @ 27.13 dBm	177.4	mA
	EGSM900 (3UL/2DL) @ 27.28 dBm	278.3	mA
	EGSM900 (4UL/1DL) @ 27.19 dBm	371.0	mA
	DCS1800 (1UL/4DL) @ 26.04 dBm	170.6	mA
	DCS1800 (2UL/3DL) @ 25.98 dBm	260.5	mA
	DCS1800 (3UL/2DL) @ 25.71 dBm	349.8	mA
	DCS1800 (4UL/1DL) @ 25.46 dBm	440.2	mA
	PCS1900 (1UL/4DL) @ 26.14 dBm	171.0	mA
	PCS1900 (2UL/3DL) @ 26.11 dBm	260.5	mA
	PCS1900 (3UL/2DL) @ 26.11 dBm	349.6	mA
	PCS1900 (4UL/1DL) @ 25.70 dBm	442.3	mA
WCDMA data transfer	B1 (HSDPA) @ 22.43 dBm	503.8	mA
	B5 (HSDPA) @ 22.23 dBm	471.6	mA
	B8 (HSDPA) @ 22.24 dBm	481.6	mA
	B1 (HSUPA) @ 22.30 dBm	504.6	mA
	B5 (HSUPA) @ 21.93 dBm	460.5	mA
	B8 (HSUPA) @ 21.90 dBm	464.8	mA
LTE data transfer	LTE-FDD B1 @ 23.29 dBm	737	mA
	LTE-FDD B3 @ 23.29 dBm	756	mA
	LTE-FDD B5 @ 23.44 dBm	636	mA
	LTE-FDD B7 @ 23.28 dBm	842	mA
	LTE-FDD B8 @ 23.44 dBm	639	mA
	LTE-FDD B20 @ 23.36 dBm	684	mA
	LTE-TDD B38 @ 23.19 dBm	427	mA

	LTE-TDD B40 @ 23.17 dBm	427	mA
	LTE-TDD B41 @ 23.19 dBm	455	mA

Table 52: SC20-EX Current Consumption

Description	Conditions	Typ.	Unit
OFF state	Power down	7	μA
GSM/GPRS supply current	Sleep (USB disconnected) @ DRX = 2	4.524	mA
	Sleep (USB disconnected) @ DRX = 5	3.212	mA
	Sleep (USB disconnected) @ DRX = 9	2.873	mA
WCDMA supply current	Sleep (USB disconnected) @ DRX = 6	4.211	mA
	Sleep (USB disconnected) @ DRX = 7	3.195	mA
	Sleep (USB disconnected) @ DRX = 8	2.879	mA
	Sleep (USB disconnected) @ DRX = 9	2.63	mA
LTE-FDD supply current	Sleep (USB disconnected) @ DRX = 5	7.819	mA
	Sleep (USB disconnected) @ DRX = 6	5.036	mA
	Sleep (USB disconnected) @ DRX = 7	3.605	mA
	Sleep (USB disconnected) @ DRX = 8	2.956	mA
LTE-TDD supply current	Sleep (USB disconnected) @ DRX = 5	7.653	mA
	Sleep (USB disconnected) @ DRX = 6	5.1	mA
	Sleep (USB disconnected) @ DRX = 7	3.649	mA
	Sleep (USB disconnected) @ DRX = 8	2.975	mA
GSM voice call	GSM850 PCL = 5 @ 33.13 dBm	281.68	mA

	GSM850 PCL = 12 @ 19.15 dBm	166.5	mA
	GSM850 PCL = 19 @ 5.31 dBm	114.67	mA
	EGSM900 PCL = 5 @ 33.07 dBm	327.32	mA
	EGSM900 PCL = 12 @ 19.53 dBm	168.33	mA
	EGSM900 PCL = 19 @ 5.59 dBm	115.63	mA
	DCS1800 PCL = 0 @ 30.00 dBm	235.97	mA
	DCS1800 PCL = 7 @ 16.45 dBm	198.38	mA
	DCS1800 PCL = 15 @ 0.67 dBm	181.44	mA
	PCS1900 PCL = 0 @ 29.72 dBm	273.92	mA
	PCS1900 PCL = 7 @ 16.72 dBm	232.21	mA
	PCS1900 PCL = 15 @ 0.98 dBm	231.1	mA
WCDMA voice call	B1 (max power) @ 23.18 dBm	581.58	mA
	B5 (max power) @ 23.22 dBm	529.42	mA
	B8 (max power) @ 23.29 dBm	533.35	mA
GPRS data transfer	GSM850 (1UL/4DL) @ 33.12 dBm	293.43	mA
	GSM850 (2UL/3DL) @ 33.02 dBm	414.81	mA
	GSM850 (3UL/2DL) @ 30.50 dBm	478.39	mA
	GSM850 (4UL/1DL) @ 29.49 dBM	563.98	mA
	EGSM900 (1UL/4DL) @ 33.10 dBm	342.12	mA
	EGSM900 (2UL/3DL) @ 33.00 dBm	456.67	mA
	EGSM900 (3UL/2DL) @ 30.96 dBm	520.66	mA
	EGSM900 (4UL/1DL) @ 29.93 dBm	614.34	mA
	DCS1800 (1UL/4DL) @ 29.96 dBm	214.68	mA

	DCS1800 (2UL/3DL) @ 29.86 dBm	299.56	mA
	DCS1800 (3UL/2DL) @ 29.73 dBm	373.98	mA
	DCS1800 (4UL/1DL) @ 29.63 dBm	450.69	mA
	PCS1900 (1UL/4DL) @ 29.77 dBm	219	mA
	PCS1900 (2UL/3DL) @ 29.64 dBm	303.21	mA
	PCS1900 (3UL/2DL) @ 29.54 dBm	366.81	mA
	PCS1900 (4UL/1DL) @ 29.34 dBm	451.51	mA
EDGE data transfer	GSM850 (1UL/4DL) @ 26.75 dBm	235.97	mA
	GSM850 (2UL/3DL) @ 27.13 dBm	350.43	mA
	GSM850 (3UL/2DL) @ 26.63 dBm	458.69	mA
	GSM850 (4UL/1DL) @ 26.54 dBm	575.9	mA
	EGSM900 (1UL/4DL) @ 27.05 dBm	240.84	mA
	EGSM900 (2UL/3DL) @ 27.13 dBm	356.9	mA
	EGSM900 (3UL/2DL) @ 27.28 dBm	464.04	mA
	EGSM900 (4UL/1DL) @ 27.19 dBm	581.18	mA
	DCS1800 (1UL/4DL) @ 26.04 dBm	227.2	mA
	DCS1800 (2UL/3DL) @ 25.98 dBm	322.96	mA
	DCS1800 (3UL/2DL) @ 25.71 dBm	415.19	mA
	DCS1800 (4UL/1DL) @ 25.46 dBm	517.24	mA
	PCS1900 (1UL/4DL) @ 26.14 dBm	209.57	mA
	PCS1900 (2UL/3DL) @ 26.11 dBm	309.03	mA
	PCS1900 (3UL/2DL) @ 26.11 dBm	408.65	mA
	PCS1900 (4UL/1DL) @ 25.70 dBm	515.41	mA
WCDMA data transfer	B1 (HSDPA) @ 22.43 dBm	584.14	mA
	B5 (HSDPA) @ 22.23 dBm	523.89	mA

	B8 (HSDPA) @ 22.24 dBm	533.04	mA
	B1 (HSUPA) @ 22.30 dBm	593.77	mA
	B5 (HSUPA) @ 21.93 dBm	535.61	mA
	B8 (HSUPA) @ 21.90 dBm	542.95	mA
LTE data transfer	LTE-FDD B1 @ 23.29 dBm	778.16	mA
	LTE-FDD B3 @ 23.29 dBm	808.09	mA
	LTE-FDD B5 @ 23.44 dBm	622.64	mA
	LTE-FDD B7 @ 23.28 dBm	862.03	mA
	LTE-FDD B8 @ 23.44 dBm	621.15	mA
	LTE-FDD B20 @ 23.36 dBm	824.42	mA
	LTE-TDD B38 @ 23.19 dBm	504.64	mA
	LTE-TDD B40 @ 23.17 dBm	440.76	mA
	LTE-TDD B41 @ 23.19 dBm	492.68	mA

Table 53: SC20-A/-AL Current Consumption

Description	Conditions	Typ.	Unit
OFF state	Power down	20	μA
GSM/GPRS supply current	Sleep USB disconnected) @ DRX = 2	4.08	mA
	Sleep (USB disconnected) @ DRX = 5	3.10	mA
	Sleep (USB disconnected) @ DRX = 9	2.77	mA
WCDMA supply current	Sleep (USB disconnected) @ DRX = 6	3.86	mA
	Sleep (USB disconnected) @ DRX = 7	2.90	mA
	Sleep (USB disconnected) @ DRX = 8	2.55	mA
	Sleep (USB disconnected) @ DRX = 9	2.43	mA

LTE-FDD supply current	Sleep (USB disconnected) @ DRX = 5	6.60	mA
	Sleep (USB disconnected) @ DRX = 6	4.24	mA
	Sleep (USB disconnected) @ DRX = 7	3.11	mA
	Sleep (USB disconnected) @ DRX = 8	2.77	mA
GSM voice call	GSM850 PCL = 5 @ 32.23 dBm	254.60	mA
	GSM850 PCL = 12 @ 18.34 dBm	136.30	mA
	GSM850 PCL = 19 @ 4.87 dBm	111.30	mA
	PCS1900 PCL = 0 @ 29.14 dBm	196.60	mA
	PCS1900 PCL = 7 @ 16.23 dBm	158.40	mA
	PCS1900 PCL = 15 @ 0.62 dBm	135.50	mA
WCDMA voice call	B1 (max power) @ 23.24 dBm	548.13	mA
	B2 (max power) @ 23.40 dBm	575.70	mA
	B4 (max power) @ 23.20 dBm	561.35	mA
	B5 (max power) @ 23.47 dBm	558.00	mA
	B8 (max power) @ 23.5 dBm	557.10	mA
GPRS data transfer	GSM850 (1UL/4DL) @ 32.18 dBm	254.50	mA
	GSM850 (2UL/3DL) @ 32.00 dBm	410.70	mA
	GSM850 (3UL/2DL) @ 30.43 dBm	496.10	mA
	GSM850 (4UL/1DL) @ 29.37 dBm	573.90	mA
	PCS1900 (1UL/4DL) @ 29.13 dBm	198.70	mA
	PCS1900 (2UL/3DL) @ 29.19 dBm	306.50	mA
	PCS1900 (3UL/2DL) @ 29.05 dBm	408.90	mA
	PCS1900 (4UL/1DL) @ 28.84 dBm	514.60	mA

EDGE data transfer	GSM850 (1UL/4DL) @ 26.39 dBm	186.00	mA
	GSM850 (2UL/3DL) @ 26.30 dBm	280.00	mA
	GSM850 (3UL/2DL) @ 26.30 dBm	368.00	mA
	GSM850 (4UL/1DL) @ 26.07 dBm	456.00	mA
	PCS1900 (1UL/4DL) @ 25.70 dBm	184.40	mA
	PCS1900 (2UL/3DL) @ 25.55 dBm	276.60	mA
	PCS1900 (3UL/2DL) @ 25.39 dBm	365.20	mA
	PCS1900 (4UL/1DL) @ 25.17 dBm	456.50	mA
WCDMA data transfer	B1 (HSDPA) @ 22.24 dBm	506.35	mA
	B2 (HSDPA) @ 22.44 dBm	535.10	mA
	B4 (HSDPA) @ 22.23 dBm	523.07	mA
	B5 (HSDPA) @ 22.38 dBm	513.13	mA
	B8 (HSDPA) @ 22.47 dBm	512.30	mA
	B1 (HSUPA) @ 22.2 dBm	516.00	mA
	B2 (HSUPA) @ 22.4 dBm	545.60	mA
	B4 (HSUPA) @ 21.93 dBm	527.93	mA
	B5 (HSUPA) @ 22.26 dBm	528.94	mA
	B8 (HSUPA) @ 22 dBm	507.70	mA
LTE data transfer	LTE-FDD B2 @ 23.05 dBm	710.01	mA
	LTE-FDD B4 @ 23.3 dBm	736.50	mA
	LTE-FDD B5 @ 23.13 dBm	626.18	mA
	LTE-FDD B7 @ 22.75 dBm	733.40	mA
	LTE-FDD B12 @ 22.74 dBm	606.02	mA
	LTE-FDD B13 @ 23.3 dBm	674.84	mA
	LTE-FDD B25 @ 23.2 dBm	665.62	mA

	LTE-FDD B26 @ 23.57 dBm	718.75	mA

Table 54: SC20-AX Current Consumption

Description	Conditions	Typ.	Unit
OFF state	Power down	20	μA
GSM/GPRS supply current	Sleep USB disconnected) @ DRX = 2	4	mA
	Sleep (USB disconnected) @ DRX = 5	3.1	mA
	Sleep (USB disconnected) @ DRX = 9	2.7	mA
WCDMA supply current	Sleep (USB disconnected) @ DRX = 6	3.7	mA
	Sleep (USB disconnected) @ DRX = 7	3.1	mA
	Sleep (USB disconnected) @ DRX = 8	2.8	mA
	Sleep (USB disconnected) @ DRX = 9	2.7	mA
LTE-FDD supply current	Sleep (USB disconnected) @ DRX = 5	6.8	mA
	Sleep (USB disconnected) @ DRX = 6	4.5	mA
	Sleep (USB disconnected) @ DRX = 7	3.5	mA
	Sleep (USB disconnected) @ DRX = 8	3	mA
GSM voice call	GSM850 PCL = 5 @ 33.1 dBm	369.49	mA
	GSM850 PCL = 12 @ 19.04 dBm	205.485	mA
	GSM850 PCL = 19 @ 5.11 dBm	178.282	mA
	PCS1900 PCL = 0 @ 30.08 dBm	270.83	mA
	PCS1900 PCL = 7 @ 16.09 dBm	221.75	mA
	PCS1900 PCL = 15 @ 0.13 dBm	204.162	mA

WCDMA voice call	B1 (max power) @ 23.41 dBm	611.94	mA
	B2 (max power) @ 23.27 dBm	625.14	mA
	B4 (max power) @ 23.44 dBm	567.13	mA
	B5 (max power) @ 23.4 dBm	583.06	mA
	B8 (max power) @ 23.32 dBm	556.48	mA
GPRS data transfer	GSM850 (1UL/4DL) @ 33.34 dBm	295.23	mA
	GSM850 (2UL/3DL) @ 32.68 dBm	448.25	mA
	GSM850 (3UL/2DL) @ 30.19 dBm	495.96	mA
	GSM850 (4UL/1DL) @ 28.96 dBm	568.51	mA
	PCS1900 (1UL/4DL) @ 30.49 dBm	230.49	mA
	PCS1900 (2UL/3DL) @ 29.87 dBm	334.16	mA
	PCS1900 (3UL/2DL) @ 27.54 dBm	385.52	mA
	PCS1900 (4UL/1DL) @ 26.89dBm	464.14	mA
EDGE data transfer	GSM850 (1UL/4DL) @ 27.22 dBm	211.59	mA
	GSM850 (2UL/3DL) @ 25.95 dBm	287.5	mA
	GSM850 (3UL/2DL) @ 24 dBm	335.15	mA
	GSM850 (4UL/1DL) @ 22.92 dBm	393.81	mA
	PCS1900 (1UL/4DL) @ 26.67 dBm	200.204	mA
	PCS1900 (2UL/3DL) @ 25.19 dBm	289.62	mA
	PCS1900 (3UL/2DL) @ 23.61dBm	363.04	mA
	PCS1900 (4UL/1DL) @ 22.74 dBm	436.22	mA
WCDMA data transfer	B1 (HSDPA) @ 23.1 dBm	599.17	mA
	B2 (HSDPA) @ 23.03 dBm	626.91	mA
	B4 (HSDPA) @ 23.19 dBm	599.46	mA
	B5 (HSDPA) @ 23.09 dBm	574.8	mA

	B8 (HSDPA) @ 23.1 dBm	540.98	mA
	B1 (HSUPA) @ 22.66 dBm	616.34	mA
	B2 (HSUPA) @ 22.38 dBm	654.26	mA
	B4 (HSUPA) @ 21.56 dBm	594.59	mA
	B5 (HSUPA) @ 22.25 dBm	575.03	mA
	B8 (HSUPA) @ 22.34 dBm	549.07	mA
LTE data transfer	LTE-FDD B2 @ 23.11 dBm	790.67	mA
	LTE-FDD B4 @ 23.44 dBm	749.6	mA
	LTE-FDD B5 @ 23.61 dBm	702.76	mA
	LTE-FDD B7 @ 23.50 dBm	866.24	mA
	LTE-FDD B12 @ 23.16 dBm	649.1	mA
	LTE-FDD B13 @ 23.04 dBm	684.23	mA
	LTE-FDD B25 @ 23.30 dBm	813.32	mA
	LTE-FDD B26 @ 23.44 dBm	805.7	mA

Table 55: SC20-AU/-AUL Current Consumption

Description	Conditions	Typ.	Unit
OFF state	Power down	20	μA
GSM/GPRS supply current	Sleep (USB disconnected) @ DRX = 2	3.31	mA
	Sleep (USB disconnected) @ DRX = 5	2.30	mA
	Sleep (USB disconnected) @ DRX = 9	2.01	mA
WCDMA supply current	Sleep (USB disconnected) @ DRX = 6	2.79	mA
	Sleep (USB disconnected) @ DRX = 7	2.21	mA
	Sleep (USB disconnected) @ DRX = 8	1.90	mA

	Sleep (USB disconnected) @ DRX = 9	1.75	mA
LTE-FDD supply current	Sleep (USB disconnected) @ DRX = 5	5.29	mA
	Sleep (USB disconnected) @ DRX = 6	3.59	mA
	Sleep (USB disconnected) @ DRX = 7	2.76	mA
	Sleep (USB disconnected) @ DRX = 8	2.24	mA
LTE-TDD supply current	Sleep (USB disconnected) @ DRX = 5	5.52	mA
	Sleep (USB disconnected) @ DRX = 6	3.71	mA
	Sleep (USB disconnected) @ DRX = 7	2.76	mA
	Sleep (USB disconnected) @ DRX = 8	2.28	mA
GSM voice call	GSM850 PCL = 5 @ 32.96 dBm	268	mA
	GSM850 PCL = 12 @ 18.83 dBm	133	mA
	GSM850 PCL = 19 @ 5.31 dBm	109	mA
	EGSM900 PCL = 5 @ 32.96 dBm	267	mA
	EGSM900 PCL = 12 @ 19.21 dBm	137	mA
	EGSM900 PCL = 19 @ 5.60 dBm	108	mA
	DCS1800 PCL = 0 @ 29.93 dBm	202	mA
	DCS1800 PCL = 7 @ 16.29 dBm	152	mA
	DCS1800 PCL = 15 @ 0.62 dBm	131	mA
	PCS1900 PCL = 0 @ 29.67 dBm	194	mA
	PCS1900 PCL = 7 @ 16.74 dBm	149	mA
	PCS1900 PCL = 15 @ 1.09 dBm	130	mA

WCDMA voice call	B1 (max power) @ 23.33 dBm	561	mA
	B2 (max power) @ 23.51 dBm	521	mA
	B5 (max power) @ 23.37 dBm	551	mA
	B8 (max power) @ 23.38 dBm	478	mA
GPRS data transfer	GSM850 (1UL/4DL) @ 32.91 dBm	267	mA
	GSM850 (2UL/3DL) @ 32.26 dBm	388	mA
	GSM850 (3UL/2DL) @ 30.72 dBm	503	mA
	GSM850 (4UL/1DL) @ 29.38 dBm	574	mA
	EGSM900 (1UL/4DL) @ 32.92 dBm	266	mA
	EGSM900 (2UL/3DL) @ 32.74 dBm	396	mA
	EGSM900 (3UL/2DL) @ 30.85 dBm	509	mA
	EGSM900 (4UL/1DL) @ 29.58 dBm	583	mA
	DCS1800 (1UL/4DL) @ 39.81 dBm	205	mA
	DCS1800 (2UL/3DL) @ 39.70 dBm	316	mA
	DCS1800 (3UL/2DL) @ 29.50 dBm	398	mA
	DCS1800 (4UL/1DL) @ 29.34 dBm	530	mA
	PCS1900 (1UL/4DL) @ 29.58 dBm	182	mA
	PCS1900 (2UL/3DL) @ 29.48 dBm	285	mA
	PCS1900 (3UL/2DL) @ 29.31 dBm	385	mA
	PCS1900 (4UL/1DL) @ 29.40 dBm	498	mA
EDGE data transfer	GSM850 (1UL/4DL) @ 26.70 dBm	166	mA
	GSM850 (2UL/3DL) @ 27.02 dBm	300	mA
	GSM850 (3UL/2DL) @ 26.60 dBm	389	mA
	GSM850 (4UL/1DL) @ 26.33 dBm	457	mA
	EGSM900 (1UL/4DL) @ 26.87 dBm	178	mA

	EGSM900 (2UL/3DL) @ 27.27 dBm	276	mA
	EGSM900 (3UL/2DL) @ 26.85 dBm	394	mA
	EGSM900 (4UL/1DL) @ 26.53 dBm	490	mA
	DCS1800 (1UL/4DL) @ 25.39 dBm	197	mA
	DCS1800 (2UL/3DL) @ 25.40 dBm	287	mA
	DCS1800 (3UL/2DL) @ 25.35 dBm	373	mA
	DCS1800 (4UL/1DL) @ 25.05 dBm	461	mA
	PCS1900 (1UL/4DL) @ 26.03 dBm	168	mA
	PCS1900 (2UL/3DL) @ 26.07 dBm	257	mA
	PCS1900 (3UL/2DL) @ 25.81 dBm	345	mA
	PCS1900 (4UL/1DL) @ 25.70 dBm	436	mA
WCDMA data transfer	B1 (HSDPA) @ 23.02 dBm	517	mA
	B2 (HSDPA) @ 23.11 dBm	550	mA
	B5 (HSDPA) @ 22.68 dBm	486	mA
	B8 (HSDPA) @ 22.72 dBm	466	mA
	B1 (HSUPA) @ 22.39 dBm	521	mA
	B2 (HSUPA) @ 23.19 dBm	509	mA
	B5 (HSUPA) @ 22.44 dBm	503	mA
	B8 (HSUPA) @ 22.25 dBm	474	mA
LTE data transfer	LTE-FDD B1 @ 23.37 dBm	698	mA
	LTE-FDD B3 @ 23.06 dBm	709	mA
	LTE-FDD B5 @ 23.25 dBm	643	mA
	LTE-FDD B7 @ 22.82 dBm	802	mA
	LTE-FDD B8 @ 23.47 dBm	620	mA
	LTE-FDD B28 @ 23.13 dBm	756	mA

	LTE-TDD B40 @ 23.24 dBm	388	mA

Table 56: SC20-J/-JL Current Consumption

Description	Conditions	Typ.	Unit
OFF state	Power down	20	μA
WCDMA supply current	Sleep (USB disconnected) @ DRX = 6	3.07	mA
	Sleep (USB disconnected) @ DRX = 7	2.41	mA
	Sleep (USB disconnected) @ DRX = 8	2.11	mA
	Sleep (USB disconnected) @ DRX = 9	1.95	mA
LTE-FDD supply current	Sleep (USB disconnected) @ DRX = 5	5.17	mA
	Sleep (USB disconnected) @ DRX = 6	3.50	mA
	Sleep (USB disconnected) @ DRX = 7	2.60	mA
	Sleep (USB disconnected) @ DRX = 8	2.16	mA
LTE-TDD supply current	Sleep (USB disconnected) @ DRX = 5	5.40	mA
	Sleep (USB disconnected) @ DRX = 6	3.53	mA
	Sleep (USB disconnected) @ DRX = 7	2.62	mA
	Sleep (USB disconnected) @ DRX = 8	2.17	mA
WCDMA voice call	B1 (max power) @ 22.80 dBm	460	mA
	B6 (max power) @ 23.09 dBm	505	mA
	B8 (max power) @ 23.02 dBm	504	mA
	B19 (max power) @ 23.07 dBm	505	mA
WCDMA data transfer	B1 (HSDPA) @ 22.13 dBm	482	mA
	B6 (HSDPA) @ 22.05 dBm	477	mA

	B8 (HSDPA) @ 22.17 dBm	471	mA
	B19 (HSDPA) @ 22.31 dBm	500	mA
	B1 (HSUPA) @ 21.4 dBm	494	mA
	B6 (HSUPA) @ 22.05 dBm	499	mA
	B8 (HSUPA) @ 21.57 dBm	472	mA
	B19 (HSUPA) @ 22.14 dBm	496	mA
LTE data transfer	LTE-FDD B1 @ 23.64 dBm	636	mA
	LTE-FDD B3 @ 23.52 dBm	673	mA
	LTE-FDD B8 @ 23.40 dBm	637	mA
	LTE-FDD B18 @ 23.45 dBm	650	mA
	LTE-FDD B19 @ 23.42 dBm	642	mA
	LTE-FDD B26 @ 23.36 dBm	645	mA
	LTE-TDD B41 @ 23.23 dBm	451	mA

Table 57: SC20-EU Current Consumption

Description	Conditions	Typ.	Unit
OFF state	Power down	20	μA
GSM/GPRS supply current	Sleep (USB disconnected) DRX = 2	3.58	mA
	Sleep (USB disconnected) DRX = 5	2.46	mA
	Sleep (USB disconnected) DRX = 9	2.13	mA
WCDMA supply current	Sleep (USB disconnected) DRX = 6	2.99	mA
	Sleep (USB disconnected) DRX = 7	2.35	mA
	Sleep (USB disconnected) DRX = 8	2.01	mA
	Sleep (USB disconnected) DRX = 9	1.85	mA
LTE-FDD	Sleep (USB disconnected) DRX = 5	5.51	mA

supply current	Sleep (USB disconnected) DRX = 6	3.56	mA
	Sleep (USB disconnected) DRX = 7	2.62	mA
	Sleep (USB disconnected) DRX = 8	2.14	mA
LTE-TDD supply current	Sleep (USB disconnected) DRX = 5	5.93	mA
	Sleep (USB disconnected) DRX = 6	3.74	mA
	Sleep (USB disconnected) DRX = 7	2.70	mA
	Sleep (USB disconnected) DRX = 8	2.17	mA
GSM voice call	GSM850 PCL = 5 @ 32.29 dBm	245	mA
	GSM850 PCL = 12 @ 19.04 dBm	127	mA
	GSM850 PCL = 19 @ 5.21 dBm	101	mA
	EGSM900 PCL = 5 @ 32.44 dBm	250	mA
	EGSM900 PCL = 12 @ 19.23 dBm	128	mA
	EGSM900 PCL = 19 @ 5.64 dBm	103	mA
	DCS1800 PCL = 0 @ 29.46 dBm	189	mA
	DCS1800 PCL = 7 @ 16.31 dBm	141	mA
	DCS1800 PCL = 15 @ 0.65 dBm	123	mA
	PCS1900 PCL = 0 @ 29.69 dBm	188	mA
	PCS1900 PCL = 7 @ 16.62 dBm	141	mA
	PCS1900 PCL = 15 @ 1.03 dBm	122	mA
WCDMA voice call	B1 (max power) @ 22.92 dBm	525	mA
	B2 (max power) @ 22.93 dBm	535	mA
	B5 (max power) @ 23.14 dBm	552	mA
	B8 (max power) @ 23.1 dBm	519	mA

GPRS data transfer	GSM850 (1UL/4DL) @ 32.45 dBm	249	mA
	GSM850 (2UL/3DL) @ 32.27 dBm	408	mA
	GSM850 (3UL/2DL) @ 30.12 dBm	468	mA
	GSM850 (4UL/1DL) @ 29.17 dBm	551	mA
	EGSM900 (1UL/4DL) @ 32.82 dBm	252	mA
	EGSM900 (2UL/3DL) @ 32.63 dBm	415	mA
	EGSM900 (3UL/2DL) @ 30.69 dBm	481	mA
	EGSM900 (4UL/1DL) @ 29.72 dBm	569	mA
	DCS1800 (1UL/4DL) @ 29.76 dBm	195	mA
	DCS1800 (2UL/3DL) @ 29.62 dBm	305	mA
	DCS1800 (3UL/2DL) @ 27.34 dBm	357	mA
	DCS1800 (4UL/1DL) @ 26.50 dBm	432	mA
	PCS1900 (1UL/4DL) @ 30.04 dBm	191	mA
	PCS1900 (2UL/3DL) @ 29.92 dBm	298	mA
	PCS1900 (3UL/2DL) @ 27.98 dBm	356	mA
	PCS1900 (4UL/1DL) @ 26.80 dBm	425	mA
EDGE data transfer	GSM850 (1UL/4DL) @ 26.39 dBm	171	mA
	GSM850 (2UL/3DL) @ 26.32 dBm	257	mA
	GSM850 (3UL/2DL) @ 24.39 dBm	310	mA
	GSM850 (4UL/1DL) @ 23.58 dBm	372	mA
	EGSM900 (1UL/4DL) @ 26.72 dBm	172	mA
	EGSM900 (2UL/3DL) @ 26.63 dBm	263	mA
	EGSM900 (3UL/2DL) @ 24.59 dBm	315	mA
	EGSM900 (4UL/1DL) @ 23.76 dBm	379	mA
	DCS1800 (1UL/4DL) @ 25.77 dBm	178	mA

	DCS1800 (2UL/3DL) @ 25.64 dBm	261	mA
	DCS1800 (3UL/2DL) @ 23.52 dBm	322	mA
	DCS1800 (4UL/1DL) @ 22.37 dBm	392	mA
	PCS1900 (1UL/4DL) @ 26.13 dBm	167	mA
	PCS1900 (2UL/3DL) @ 25.95 dBm	249	mA
	PCS1900 (3UL/2DL) @ 23.62 dBm	313	mA
	PCS1900 (4UL/1DL) @ 22.46 dBm	386	mA
WCDMA data transfer	B1 (HSDPA) @ 22.48 dBm	494	mA
	B2 (HSDPA) @ 22.45 dBm	490	mA
	B5 (HSDPA) @ 22.41 dBm	510	mA
	B8 (HSDPA) @ 22.41 dBm	479	mA
	B1 (HSUPA) @ 21.85 dBm	496	mA
	B2 (HSUPA) @ 21.86 dBm	475	mA
	B5 (HSUPA) @ 21.46 dBm	489	mA
	B8 (HSUPA) @ 21.52 dBm	468	mA
LTE data transfer	LTE-FDD B1 @ 22.87 dBm	652	mA
	LTE-FDD B2 @ 22.97 dBm	713	mA
	LTE-FDD B3 @ 22.79 dBm	672	mA
	LTE-FDD B5 @ 23.03 dBm	641	mA
	LTE-FDD B7 @ 22.41 dBm	749	mA
	LTE-FDD B8 @ 23.22 dBm	619	mA
	LTE-FDD B20 @ 23.08 dBm	618	mA
	LTE-FDD B28A @ 22.92 dBm	741	mA
	LTE-TDD B38 @ 22.67 dBm	375	mA

7.6. Tx Power

The following table shows the RF output power of the SC20 series.

Table 58: RF Output Power

Frequency Bands	Max. RF Output Power	Min. RF Output Power
GSM850	33 dBm ±2 dB	5 dBm ±5 dB
EGSM900	33 dBm ±2 dB	5 dBm ±5 dB
DCS1800	30 dBm ±2 dB	0 dBm ±5 dB
PCS1900	30 dBm ±2 dB	0 dBm ±5 dB
WCDMA B1	24 dBm +1/-3 dB	< -49 dBm
WCDMA B2	24 dBm +1/-3 dB	< -49 dBm
WCDMA B4	24 dBm +1/-3 dB	< -49 dBm
WCDMA B5	24 dBm +1/-3 dB	< -49 dBm
WCDMA B6	24 dBm +1/-3 dB	< -49 dBm
WCDMA B8	24 dBm +1/-3 dB	< -49 dBm
WCDMA B19	24 dBm +1/-3 dB	< -49 dBm
EVDO-CDMA BC0	24 dBm +3/-1 dB	< -49 dBm
TD-SCDMA B34	24 dBm +1/-3 dB	< -49 dBm
TD-SCDMA B39	24 dBm +1/-3 dB	< -49 dBm
LTE-FDD B1	23 dBm ±2 dB	< -39 dBm
LTE-FDD B2	23 dBm ±2 dB	< -39 dBm
LTE-FDD B3	23 dBm ±2 dB	< -39 dBm
LTE-FDD B4	23 dBm ±2 dB	< -39 dBm
LTE-FDD B5	23 dBm ±2 dB	< -39 dBm
LTE-FDD B7	23 dBm ±2 dB	< -39 dBm

LTE-FDD B8	23 dBm ±2 dB	< -39 dBm
LTE-FDD B12	23 dBm ±2 dB	< -39 dBm
LTE-FDD B13	23 dBm ±2 dB	< -39 dBm
LTE-FDD B18	23 dBm ±2 dB	< -39 dBm
LTE-FDD B19	23 dBm ±2 dB	< -39 dBm
LTE-FDD B20	23 dBm ±2 dB	< -39 dBm
LTE-FDD B25	23 dBm ±2 dB	< -39 dBm
LTE-FDD B26	23 dBm ±2 dB	< -39 dBm
LTE-FDD B28	23 dBm ±2 dB	< -39 dBm
LTE-TDD B38	23 dBm ±2 dB	< -39 dBm
LTE-TDD B39	23 dBm ±2 dB	< -39 dBm
LTE-TDD B40	23 dBm ±2 dB	< -39 dBm
LTE-TDD B41	23 dBm ±2 dB	< -39 dBm

NOTE

In GPRS 4-slot Tx mode, the maximum output power is reduced by 3 dB. This design conforms to the GSM specification as described in ***Chapter 13.16*** of *3GPP TS 51.010-1*.

7.7. Rx Sensitivity

The following table shows the RF receiving sensitivity of the SC20 series.

Table 59: SC20-CE R1.1/-CEL R1.1 RF Receiving Sensitivity

Frequency Bands	Receiving Sensitivity (Typ.)			3GPP (SIMO)
	Primary	Diversity	SIMO	
EGSM900	-109 dBm	-	-	-102 dBm

DCS1800	-109 dBm	-	-	-102 dBm
WCDMA B1	-110 dBm	-	-	-106.7 dBm
WCDMA B8	-110 dBm	-	-	-103.7 dBm
EVDO-CDMA BC0	-108 dBm	-	-	-104 dBm
TD-SCDMA B34	-113 dBm	-	-	-108 dBm
TD-SCDMA B39	-113 dBm	-	-	-108 dBm
LTE-FDD B1 (10 MHz)	-98 dBm	-99.1 dBm	-100.6 dBm	-96.3 dBm
LTE-FDD B3 (10 MHz)	-98 dBm	-98.1 dBm	-101 dBm	-93.3 dBm
LTE-FDD B5 (10 MHz)	-98.3 dBm	-99.5 dBm	-101.7 dBm	-94.3 dBm
LTE-FDD B8 (10 MHz)	-98.2 dBm	-99 dBm	-101 dBm	-93.3 dBm
LTE-TDD B38 (10 MHz)	-98.3 dBm	-98 dBm	-99 dBm	-96.3 dBm
LTE-TDD B39 (10 MHz)	-98.5 dBm	-98.8 dBm	-99.5 dBm	-96.3 dBm
LTE-TDD B40 (10 MHz)	-98.8 dBm	-98.6 dBm	-101 dBm	-96.3 dBm
LTE-TDD B41 (10 MHz)	-98.5 dBm	-98 dBm	-101 dBm	-94.3 dBm

Table 60: SC20-E/-EL RF Receiving Sensitivity

Frequency Bands	Receiving Sensitivity (Typ.)			3GPP (SIMO)
	Primary	Diversity	SIMO	
GSM850	-109 dBm	-	-	-102 dBm
EGSM900	-109 dBm	-	-	-102 dBm
DCS1800	-109 dBm	-	-	-102 dBm
PCS1900	-109 dBm	-	-	-102 dBm
WCDMA B1	-110 dBm	-	-	-106.7 dBm
WCDMA B5	-110 dBm	-	-	-104.7 dBm
WCDMA B8	-110 dBm	-	-	-103.7 dBm

LTE-FDD B1 (10 MHz)	-98 dBm	-99 dBm	-102 dBm	-96.3 dBm
LTE-FDD B3 (10 MHz)	-97 dBm	-98 dBm	-101 dBm	-93.3 dBm
LTE-FDD B5 (10 MHz)	-99 dBm	-98 dBm	-102 dBm	-94.3 dBm
LTE-FDD B7 (10 MHz)	-97 dBm	-97 dBm	-102 dBm	-94.3 dBm
LTE-FDD B8 (10 MHz)	-98 dBm	-98 dBm	-101 dBm	-93.3 dBm
LTE-FDD B20 (10 MHz)	-98 dBm	-98 dBm	-101 dBm	-93.3 dBm
LTE-TDD B38 (10 MHz)	-97 dBm	-98 dBm	-100 dBm	-96.3 dBm
LTE-TDD B40 (10 MHz)	-97 dBm	-98 dBm	-100 dBm	-96.3 dBm
LTE-TDD B41 (10 MHz)	-96 dBm	-98 dBm	-100 dBm	-94.3 dBm

Table 61: SC20-EX RF Receiving Sensitivity

Frequency Bands	Receiving Sensitivity (Typ.)			3GPP (SIMO)
	Primary	Diversity	SIMO	
GSM850	-109.5 dBm	-	-	-102 dBm
EGSM900	-109.5 dBm	-	-	-102 dBm
DCS1800	-109 dBm	-	-	-102 dBm
PCS1900	-109 dBm	-	-	-102 dBm
WCDMA B1	-109.5 dBm	-109.5 dBm	-	-106.7 dBm
WCDMA B5	-110 dBm	-110 dBm	-	-104.7 dBm
WCDMA B8	-110 dBm	-110 dBm	-	-103.7 dBm
LTE-FDD B1 (10 MHz)	-97.5 dBm	-97.6 dBm	-100.6 dBm	-96.3 dBm
LTE-FDD B3 (10 MHz)	-97.7 dBm	-99.2 dBm	-101.5 dBm	-93.3 dBm
LTE-FDD B5 (10 MHz)	-98.9 dBm	-100.3 dBm	-102.6 dBm	-94.3 dBm
LTE-FDD B7 (10 MHz)	-97.3 dBm	-98.2 dBm	-100.8 dBm	-94.3 dBm
LTE-FDD B8 (10 MHz)	-98.5 dBm	-97.6 dBm	-101.1 dBm	-93.3 dBm

LTE-FDD B20 (10 MHz)	-98.1 dBm	-99.4 dBm	-101.7 dBm	-93.3 dBm
LTE-TDD B38 (10 MHz)	-95.9 dBm	-96.8 dBm	-99.1 dBm	-96.3 dBm
LTE-TDD B40 (10 MHz)	-96.5 dBm	-97.5 dBm	-99.8 dBm	-96.3 dBm
LTE-TDD B41 (10 MHz)	-95.5 dBm	-95.1 dBm	-98.3 dBm	-94.3 dBm

Table 62: SC20-A/-AL RF Receiving Sensitivity

Frequency Bands	Receiving Sensitivity (Typ.)			3GPP (SIMO)
	Primary	Diversity	SIMO	
GSM850	-109.5 dBm	-	-	-102 dBm
PCS1900	-109 dBm	-	-	-102 dBm
WCDMA B1	-110 dBm	-110 dBm	-113 dBm	-106.7 dBm
WCDMA B2	-110 dBm	-110 dBm	-113 dBm	-104.7 dBm
WCDMA B4	-110 dBm	-110 dBm	-113 dBm	-106.7 dBm
WCDMA B5	-110 dBm	-111 dBm	-113 dBm	-104.7 dBm
WCDMA B8	-110 dBm	-	-	-103.7 dBm
LTE-FDD B2 (10 MHz)	-98 dBm	-99 dBm	-102 dBm	-94.3 dBm
LTE-FDD B4 (10 MHz)	-97.5 dBm	-98 dBm	-101 dBm	-96.3 dBm
LTE-FDD B5 (10 MHz)	-99.5 dBm	-99.5 dBm	-102.5 dBm	-94.3 dBm
LTE-FDD B7 (10 MHz)	-97 dBm	-99 dBm	-100 dBm	-94.3 dBm
LTE-FDD B12 (10 MHz)	-98.5 dBm	-98.5 dBm	-101 dBm	-93.3 dBm
LTE-FDD B13 (10 MHz)	-96.5 dBm	-99 dBm	-101 dBm	-93.3 dBm
LTE-TDD B25 (10 MHz)	-99 dBm	-99 dBm	-102 dBm	-92.8 dBm
LTE-TDD B26 (10 MHz)	-99 dBm	-100 dBm	-102.5 dBm	-93.8 dBm

Table 63: SC20-AX RF Receiving Sensitivity

Frequency Bands	Receiving Sensitivity (Typ.)			3GPP (SIMO)
	Primary	Diversity	SIMO	
GSM850	-110.0dBm	-	-	-102 dBm
PCS1900	-108.9 dBm	-	-	-102 dBm
WCDMA B1	-109.5 dBm	-110.8 dBm	-112.8 dBm	-106.7 dBm
WCDMA B2	-110.2 dBm	-110.7 dBm	-112.7 dBm	-104.7 dBm
WCDMA B4	-109.2 dBm	-110.0 dBm	-112 dBm	-106.7 dBm
WCDMA B5	-111.0 dBm	-112 dBm	--114 dBm	-104.7 dBm
WCDMA B8	-110.0 dBm	-	-	-103.7 dBm
LTE-FDD B2 (10 MHz)	-97 dBm	-99.2 dBm	-100.8 dBm	-94.3 dBm
LTE-FDD B4 (10 MHz)	-97 dBm	-99.5 dBm	-101 dBm	-96.3 dBm
LTE-FDD B5 (10 MHz)	-99.5 dBm	-99.9 dBm	-102.6 dBm	-94.3 dBm
LTE-FDD B7 (10 MHz)	-96.5 dBm	-97.7 dBm	-100.7 dBm	-94.3 dBm
LTE-FDD B12 (10 MHz)	-98.5 dBm	-98.5 dBm	-101.5 dBm	-93.3 dBm
LTE-FDD B13 (10 MHz)	-96.8 dBm	-98.9 dBm	-101 dBm	-93.3 dBm
LTE-TDD B25 (10 MHz)	-98.4 dBm	-98.8 dBm	-100.9 dBm	-92.8 dBm
LTE-TDD B26 (10 MHz)	-99.3 dBm	-100.0 dBm	-102.6 dBm	-93.8 dBm

Table 64: SC20-AU/-AUL RF Receiving Sensitivity

Frequency Bands	Receiving Sensitivity (Typ.)			3GPP (SIMO)
	Primary	Diversity	SIMO	
GSM850	-109 dBm	-	-	-102 dBm
EGSM900	-109 dBm	-	-	-102 dBm
DCS1800	-108 dBm	-	-	-102 dBm

PCS1900	-109 dBm	-	-	-102 dBm
WCDMA B1	-110 dBm	-110 dBm	-113 dBm	-106.7 dBm
WCDMA B2	-110 dBm	-	-	-104.7 dBm
WCDMA B5	-110 dBm	-110 dBm	-113 dBm	-104.7 dBm
WCDMA B8	-110 dBm	-110 dBm	-113 dBm	-103.7 dBm
LTE-FDD B1 (10 MHz)	-98 dBm	-99 dBm	-101 dBm	-96.3 dBm
LTE-FDD B3 (10 MHz)	-97 dBm	-98 dBm	-101.8 dBm	-93.3 dBm
LTE-FDD B5 (10 MHz)	-99 dBm	-100 dBm	-103 dBm	-94.3 dBm
LTE-FDD B7 (10 MHz)	-97 dBm	-99 dBm	-100.6 dBm	-94.3 dBm
LTE-FDD B8 (10 MHz)	-98 dBm	-100 dBm	-102 dBm	-93.3 dBm
LTE-FDD B28 (10 MHz)	-97.5 dBm	-100 dBm	-101.8 dBm	-94.8 dBm
LTE-TDD B40 (10 MHz)	-97 dBm	-98 dBm	-100.7 dBm	-96.3 dBm

Table 65: SC20-J/-JL RF Receiving Sensitivity

Frequency Bands	Receiving Sensitivity (Typ.)			3GPP (SIMO)
	Primary	Diversity	SIMO	
WCDMA B1	-110 dBm	-110 dBm	-113 dBm	-106.7 dBm
WCDMA B6	-110 dBm	-112 dBm	-113 dBm	-106.7 dBm
WCDMA B8	-110 dBm	-110 dBm	-113 dBm	-103.7 dBm
WCDMA B19	-110 dBm	-111 dBm	-113 dBm	-106.7 dBm
LTE-FDD B1 (10 MHz)	-97 dBm	-97.5 dBm	-100 dBm	-96.3 dBm
LTE-FDD B3 (10 MHz)	-97 dBm	-98 dBm	-101.8 dBm	-93.3 dBm
LTE-FDD B8 (10 MHz)	-97 dBm	-98 dBm	-100 dBm	-93.3 dBm
LTE-FDD B18 (10 MHz)	-98 dBm	-99 dBm	-101.5 dBm	-96.3 dBm
LTE-TDD B19 (10 MHz)	-98 dBm	-99 dBm	-101.5 dBm	-96.3 dBm

LTE-TDD B26 (10 MHz)	-98 dBm	-99 dBm	-101.5 dBm	-93.8 dBm
LTE-TDD B41 (10 MHz)	-96 dBm	-96.5 dBm	-100 dBm	-94.3 dBm

Table 66: SC20-EU RF Receiving Sensitivity

Frequency Bands	Receiving Sensitivity (Typ.)			3GPP (SIMO)
	Primary	Diversity	SIMO	
GSM850	-109 dBm	-	-	-102 dBm
EGSM900	-109 dBm	-	-	-102 dBm
DCS1800	-108 dBm	-	-	-102 dBm
PCS1900	-109 dBm	-	-	-102 dBm
WCDMA B1	-110 dBm	-110 dBm	-113 dBm	-106.7 dBm
WCDMA B2	-110 dBm	-	-	-104.7 dBm
WCDMA B5	-110 dBm	-	-	-104.7 dBm
WCDMA B8	-110 dBm	-110 dBm	-113 dBm	-103.7 dBm
LTE-FDD B1 (10 MHz)	-98 dBm	-99 dBm	-101 dBm	-96.3 dBm
LTE-FDD B2 (10 MHz)	-98 dBm	-	-	-94.3 dBm
LTE-FDD B3 (10 MHz)	-98 dBm	-99 dBm	-101 dBm	-93.3 dBm
LTE-FDD B5 (10 MHz)	-99 dBm	-	-	-94.3 dBm
LTE-FDD B7 (10 MHz)	-96 dBm	-98 dBm	-100 dBm	-94.3 dBm
LTE-FDD B8 (10 MHz)	-98 dBm	-100 dBm	-102 dBm	-93.3 dBm
LTE-FDD B20 (10 MHz)	-96 dBm	-98 dBm	-100 dBm	-93.3 dBm
LTE-FDD B28A (10 MHz)	-97 dBm	-99 dBm	-100.5 dBm	-94.8 dBm
LTE-TDD B38 (10 MHz)	-96 dBm	-98 dBm	-100 dBm	-96.3 dBm

7.8. ESD

The module is not protected against electrostatic discharge (ESD) in general. Consequently, it should be subject to ESD handling precautions that are typically applied to ESD sensitive components. Proper ESD handling and packaging procedures must be applied throughout the processing, handling and operation of any application that incorporates the module.

The following table shows the electrostatic discharge characteristics of the SC20 series.

Table 67: ESD Characteristics (Temperature: 25 ºC, Humidity: 45 %)

Tested Interfaces	Contact Discharge	Air Discharge	Unit
VBAT, GND	±5	±10	kV
All Antenna Interfaces	±5	±10	kV
USB Interface	±0.5	±1	kV
Other Interfaces	±0.5	±1	kV

8 Mechanical Information

This chapter describes the mechanical dimensions of the module. All dimensions are measured in millimeter (mm), and the tolerances for dimensions without tolerance values are ±0.2 mm.

8.1. Mechanical Dimensions

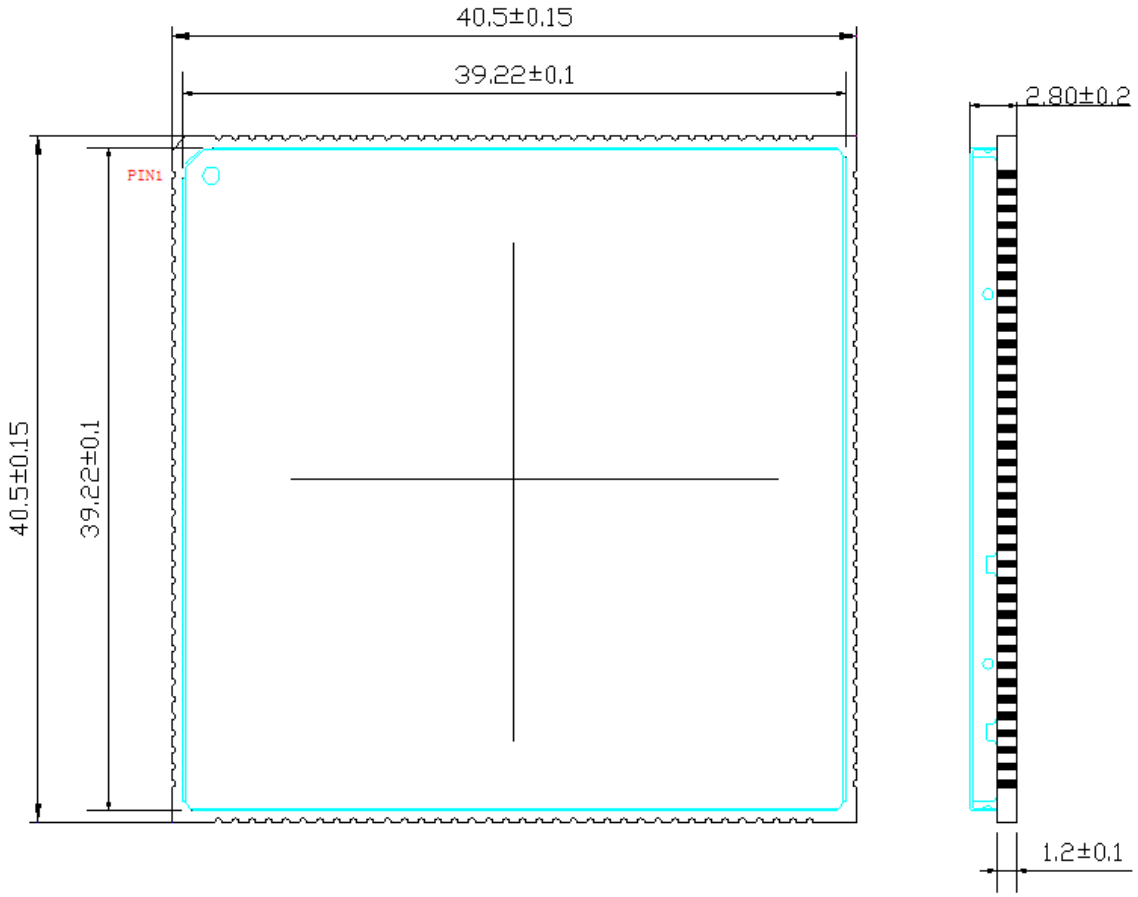

Figure 42: Module Top and Side Dimensions

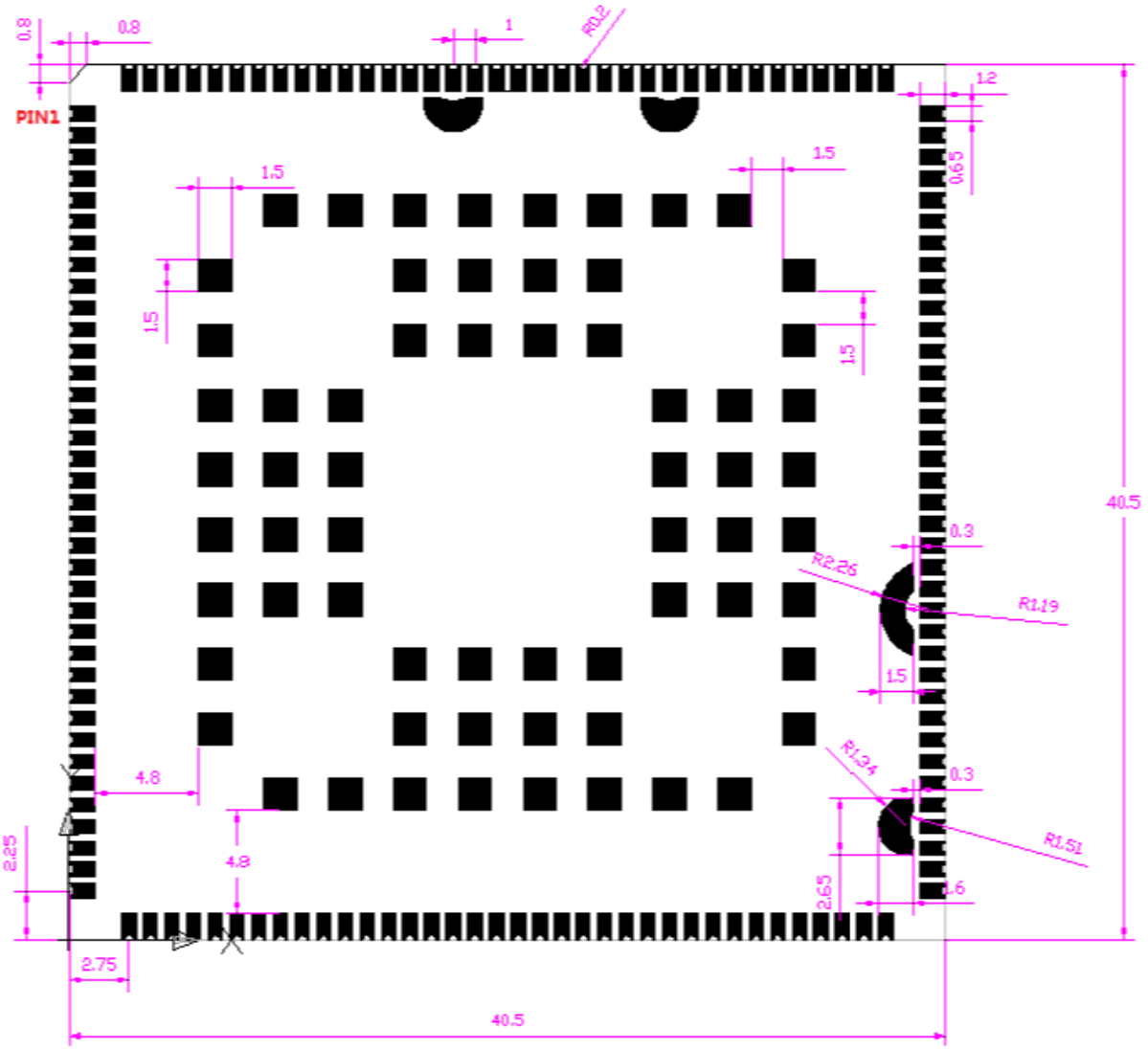

Figure 43: Module Bottom Dimensions (Top View)

NOTE

The package warpage level of the module conforms to *JEITA ED-7306* standard.

8.2. Recommended Footprint

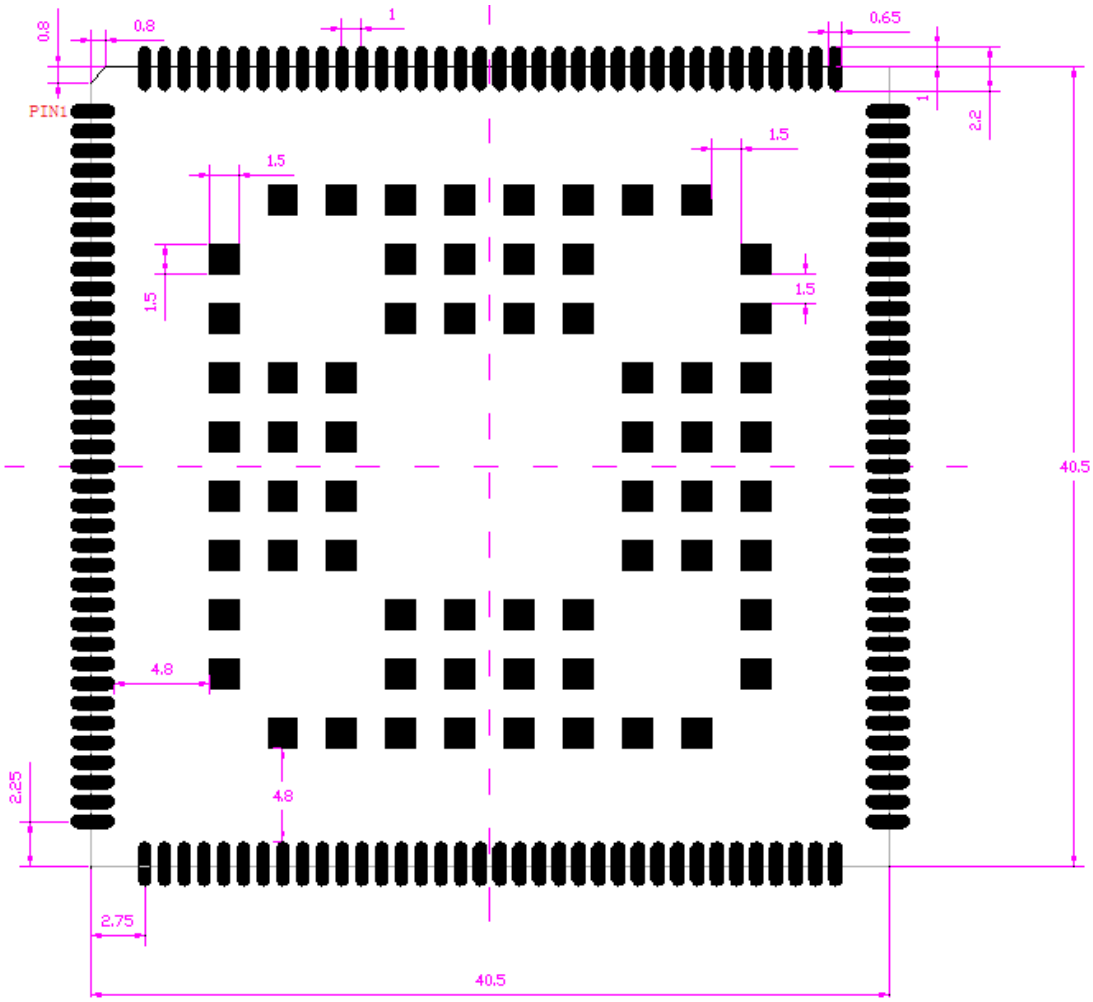

Figure 44: Recommended Footprint (Top View)

NOTE

1. For easy maintenance of the module, keep at least 5 mm between the module and other components on the host PCB.
2. All RESERVED pins should be kept open and MUST NOT be connected to ground.

8.3. Top and Bottom Views

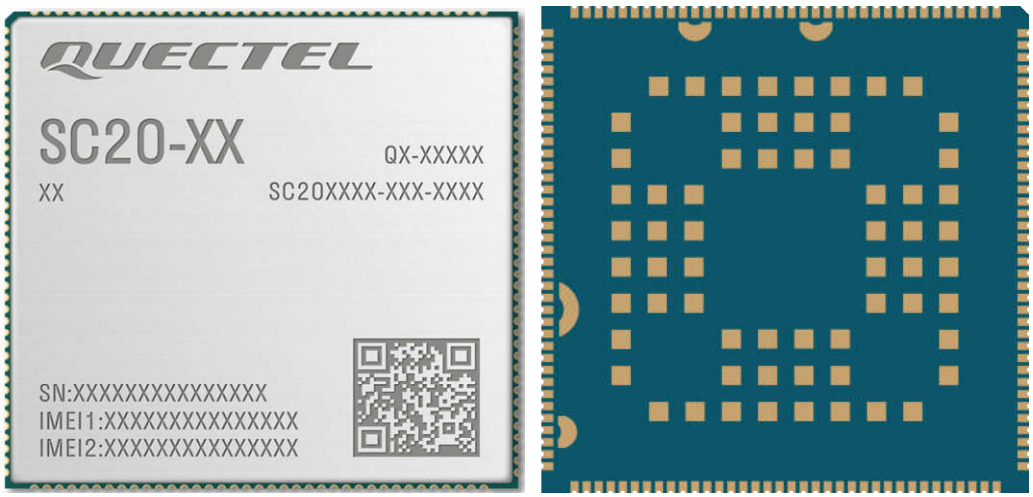

Figure 45: Top and Bottom Views of the Module

NOTE

Images above are for illustration purpose only and may differ from the actual module. For authentic appearance and label, please refer to the module received from Quectel.

9 Storage, Manufacturing and Packaging

9.1. Storage Conditions

The module is provided with vacuum-sealed packaging. MSL of the module is rated as 3. The storage requirements are shown below.

1. Recommended Storage Condition: The temperature should be 23 ±5 °C and the relative humidity should be 35–60 %.

2. The storage life (in vacuum-sealed packaging) is 12 months in Recommended Storage Condition.

3. The floor life of the module is 168 hours [14] in a plant where the temperature is 23 ±5 °C and relative humidity is below 60 %. After the vacuum-sealed packaging is removed, the module must be processed in reflow soldering or other high-temperature operations within 168 hours. Otherwise, the module should be stored in an environment where the relative humidity is less than 10 % (e.g. a drying cabinet).

4. The module should be pre-baked to avoid blistering, cracks and inner-layer separation in PCB under the following circumstances:

   - The module is not stored in Recommended Storage Condition;
   - Violation of the third requirement above occurs;
   - Vacuum-sealed packaging is broken, or the packaging has been removed for over 24 hours;
   - Before module repairing.

5. If needed, the pre-baking should follow the requirements below:

   - The module should be baked for 8 hours at 120 ±5 °C;
   - All modules must be soldered to PCB within 24 hours after the baking, otherwise they should be

[14] This floor life is only applicable when the environment conforms to *IPC/JEDEC J-STD-033*. It is recommended to start the solder reflow process within 24 hours after the package is removed if the temperature and moisture do not conform to, or are not sure to conform to *IPC/JEDEC J-STD-033*. And do not remove the packages of tremendous modules if they are not ready for soldering.

put in a dry environment such as in a drying oven.

NOTE

1. To avoid blistering, layer separation and other soldering issues, extended exposure of the module to the air is forbidden.
2. Take out the module from the package and put it on high-temperature-resistant fixtures before baking. All modules must be soldered to PCB within 24 hours after the baking, otherwise put them in the drying oven. If shorter baking time is desired, see *IPC/JEDEC J-STD-033* for the baking procedure.
3. Pay attention to ESD protection, such as wearing anti-static gloves, when touching the modules.

9.2. Manufacturing and Soldering

Push the squeegee to apply the solder paste on the surface of stencil, thus making the paste fill the stencil openings and then penetrate to the PCB. Apply proper force on the squeegee to produce a clean stencil surface on a single pass. To guarantee module soldering quality, the thickness of stencil for the module is recommended to be 0.18–0.20 mm. For more details, see ***document [4]***.

The peak reflow temperature should be 235–246 ºC, with 246 ºC as the absolute maximum reflow temperature. To avoid damage to the module caused by repeated heating, it is strongly recommended that the module should be mounted only after reflow soldering for the other side of PCB has been completed. The recommended reflow soldering thermal profile (lead-free reflow soldering) and related parameters are shown below.

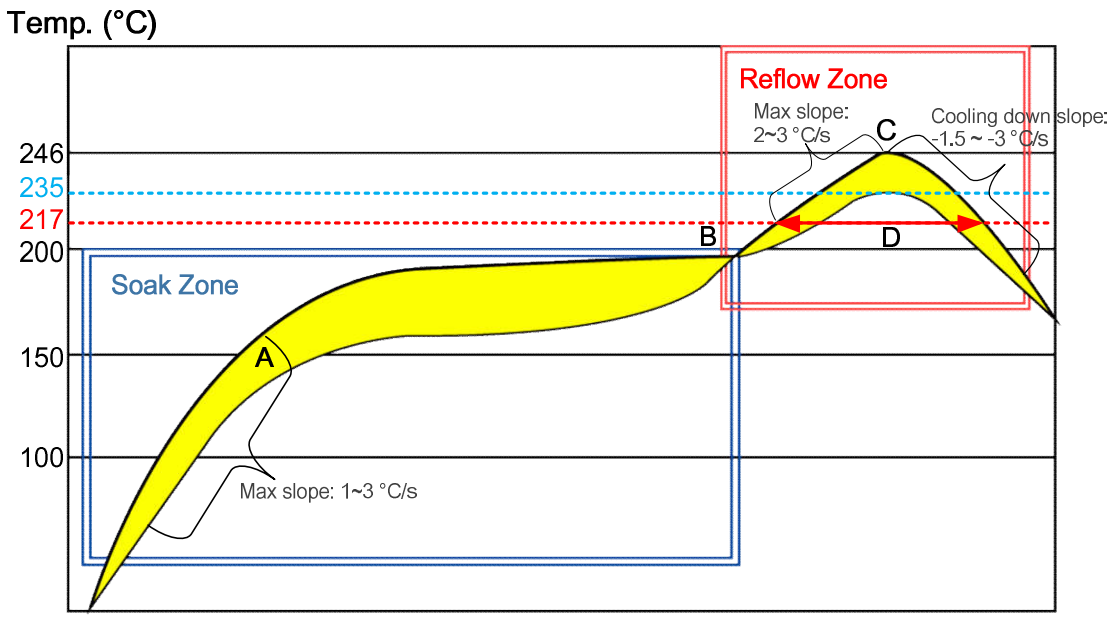

Figure 46: Recommended Reflow Soldering Thermal Profile

Table 68: Recommended Thermal Profile Parameters

Factor	Recommendation
Soak Zone	
Max slope	1–3 °C/s
Soak time (between A and B: 150 °C and 200 °C)	70–120 s
Reflow Zone	
Max slope	2–3 °C/s
Reflow time (D: over 217 °C)	40–70 s
Max temperature	235 °C to 246 °C
Cooling down slope	-1.5 to -3 °C/s
Reflow Cycle	
Max reflow cycle	1

NOTE

1. If a conformal coating is necessary for the module, do NOT use any coating material that may chemically react with the PCB or shielding cover, and prevent the coating material from flowing into the module.
2. Avoid using ultrasonic technology for module cleaning and soldering since it can damage crystals inside the module.
3. Due to the complexity of the SMT process, please contact Quectel Technical Supports in advance for any situation that you are not sure about, or any process (e.g. selective soldering) that is not mentioned in ***document [4]***.

9.3. Packaging Specification

SC20 series is packaged in tape and reel carriers. Each reel is 12.32 meters long and contains 200 modules. The following figures show the package details, measured in mm.

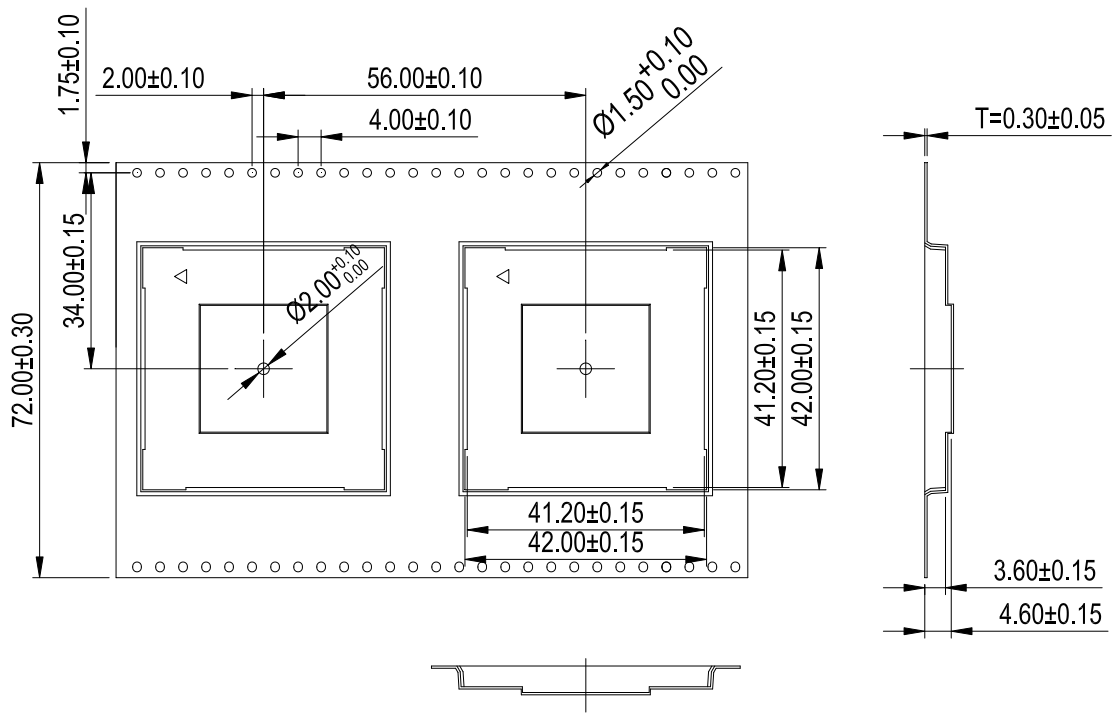

Figure 47: Tape Dimensions

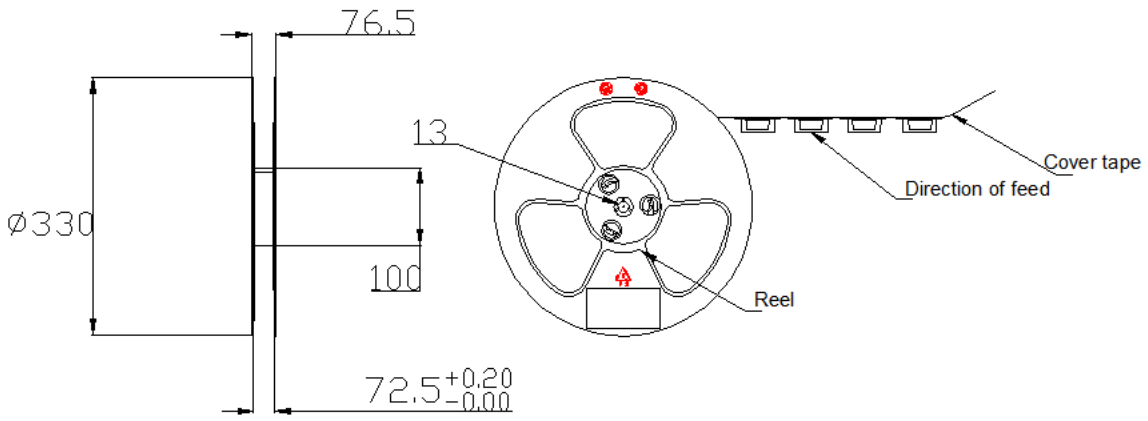

Figure 48: Reel Dimensions

Table 69: Reel Packaging

Model Name	MOQ for MP	Minimum Package: 200 pcs	Minimum Package × 4 = 800 pcs
SC20 series	200 pcs	Size: 370 mm × 350 mm × 85 mm N.W.: 1.92 kg G.W.: 3.17 kg	Size: 380 mm × 365 mm × 365 mm N.W.: 7.68 kg G.W.: 13.63 kg

10 Appendix References

Table 70: Related Documents

Document Name
[1] Quectel_Smart_EVB_User_Guide
[2] Quectel_SC20_Series_GPIO_Configuration
[3] Quectel_RF_Layout_Application_Note
[4] Quectel_Module_Secondary_SMT_Application_Note
[5] Quectel_SC20_Series_Reference_Design

Table 71: Terms and Abbreviations

Abbreviation	Description
ADC	Analog-to-Digital Converter
AMR	Adaptive Multi-rate
AP	Access Point
bps	Bits per Second
CDMA	Code Division Multiple Access
CS	Coding Scheme
CSD	Circuit Switched Data
CSI	Camera Serial Interface
CTS	Clear to Send
DC	Dual Carrier

DRX	Discontinuous Reception
DSI	Display Serial Interface
DSP	Digital Signal Processor
EDGE	Enhanced Data Rate for GSM Evolution
EFR	Enhanced Full Rate
EGSM	Enhanced GSM
eSCO	Extended Synchronous Connection Oriented
ESD	Electrostatic Discharge
ESR	Equivalent Series Resistance
FDD	Frequency Division Duplex
FR	Full Rate
GMSK	Gaussian Minimum Shift Keying
GNSS	Global Navigation Satellite System
GPIO	General Purpose Input/Output
GPRS	General Packet Radio Service
GPS	Global Positioning System
GPU	Graphics Processing Unit
GSM	Global System for Mobile Communications
HR	Half Rate
HSDPA	High Speed Downlink Packet Access
HSPA	High Speed Packet Access
HSPA+	High-Speed Packet Access+
HSUPA	High Speed Uplink Packet Access
IC	Integrated Circuit
I/O	Input/Output

I2C	Inter-Integrated Circuit
LCC	Leadless Chip Carrier
LCD	Liquid Crystal Display
LCM	LCD Module
LDO	Low Dropout Regulator
LE	Low Energy
LED	Light Emitting Diode
LGA	Land Grid Array
LNA	Low Noise Amplifier
LTE	Long-Term Evolution
MCS	Modulation and Coding Scheme
MIPI	Mobile Industry Processor Interface
NTC	Negative Temperature Coefficient
PCB	Printed Circuit Board
PDU	Protocol Data Unit
PWM	Pulse Width Modulation
PSK	Phase Shift Keying
QAM	Quadrature Amplitude Modulation
QPSK	Quadrature Phase Shift Keying
RF	Radio Frequency
RTC	Real Time Clock
RTS	Request to Send
Rx	Receive
SAW	Surface Acoustic Wave
SCO	Synchronous Connection Oriented

SD Card	Secure Digital Card
SMS	Short Message Service
SPI	Serial Peripheral Interface
TDD	Time-Division Duplex
TP	Touch Panel
TVS	Transient Voltage Suppressor
Tx	Transmit
UART	Universal Asynchronous Receiver & Transmitter
UMTS	Universal Mobile Telecommunications System
USB	Universal Serial Bus
(U)SIM	(Universal) Subscriber Identity Module
VBAT	Voltage at Battery (Pin)
Vmax	Maximum Voltage
Vmin	Minimum Voltage
Vnom	Nominal Voltage
V_I	Voltage Input
V_{IH}min	Minimum High-level Input Voltage
V_{IL}max	Maximum Low-level Input Voltage
V_{OH}max	Maximum High-level Output Voltage
V_{OH}min	Minimum High-level Output Voltage
V_{OL}max	Maximum Low-level Output Voltage
WCDMA	Wideband Code Division Multiple Access
WLAN	Wireless Local Area Network

FCC Certification Requirements.

According to the definition of mobile and fixed device is described in Part 2.1091(b), this device is a mobile device.

And the following conditions must be met:

1. This Modular Approval is limited to OEM installation for mobile and fixed applications only. The antenna installation and operating configurations of this transmitter, including any applicable source-based timeaveraging duty factor, antenna gain and cable loss must satisfy MPE categorical Exclusion Requirements of 2.1091.
2. The EUT is a mobile device; maintain at least a 20 cm separation between the EUT and the user's body and must not transmit simultaneously with any other antenna or transmitter.
3. A label with the following statements must be attached to the host end product: This device contains FCC ID: XMR202201SC20AX
4. To comply with FCC regulations limiting both maximum RF output power and human exposure to RF radiation, maximum External Antenna gain (including cable loss) must not exceed:

radiation, maximum antenna gain (including cable loss) must not exceed: Operating Band	FCC Max Antenna Gain (dBi)	FCC Max Antenna Gain (dBi)
	SC20-AX	SC20-AX without 2&3G version
GSM850	3	NA
GSM1900	1	NA
WCDMA BAND II	8	NA
WCDMA BAND IV	5	NA
WCDMA BAND V	9	NA
LTE BAND 2	8	8
LTE BAND 4	5	5
LTE BAND 5	9	5.5
LTE BAND 7	8	8
LTE BAND 12	8	5
LTE BAND 13	8	5
LTE BAND 25	8	8
LTE BAND 26	9	5.5
WLAN 2.4G	0.47	0.47
WLAN 5.2G	-0.67	-0.67
WLAN 5.3G	-0.19	-0.19
WLAN 5.5G	1.28	1.28
WLAN 5.8G	1.10	1.10
Bluetooth	0.47	0.47

5. This module must not transmit simultaneously with any other antenna or transmitter
6. The host end product must include a user manual that clearly defines operating requirements and conditions that must be observed to ensure compliance with current FCC RF exposure guidelines.

For portable devices, in addition to the conditions 3 through 6 described above, a separate approval is required to satisfy the SAR requirements of FCC Part 2.1093

If the device is used for other equipment that separate approval is required for all other operating configurations, including portable configurations with respect to 2.1093 and different antenna configurations.
For this device, OEM integrators must be provided with labeling instructions of finished products.
Please refer to KDB784748 D01 v07, section 8. Page 6/7 last two paragraphs:
A certified modular has the option to use a permanently affixed label, or an electronic label. For a permanently affixed label, the module must be labeled with an FCC ID - Section 2.926 (see 2.2 Certification (labeling requirements) above). The OEM manual must provide clear instructions explaining to the OEM the labeling requirements, options and OEM user manual instructions that are required (see next paragraph).
For a host using a certified modular with a standard fixed label, if (1) the module's FCC ID is not visible when installed in the host, or (2) if the host is marketed so that end users do not have straightforward commonly used methods for access to remove the module so that the FCC ID of the module is visible; then an additional permanent label referring to the enclosed module: "Contains Transmitter Module FCC ID: XMR202201SC20AX" or "Contains FCC ID: XMR202201SC20AX" must be used. The host OEM user manual must also contain clear instructions on how end users can find and/or access the module and the FCC ID.
The final host / module combination may also need to be evaluated against the FCC Part 15B criteria for unintentional radiators in order to be properly authorized for operation as a Part 15 digital device.
The user's manual or instruction manual for an intentional or unintentional radiator shall caution the user that changes or modifications not expressly approved by the party responsible for compliance could void the user's authority to operate the equipment. In cases where the manual is provided only in a form other than paper, such as on a computer disk or over the Internet, the information required by this section may be included in the manual in that alternative form, provided the user can reasonably be expected to have the capability to access information in that form.
This device complies with part 15 of the FCC Rules. Operation is subject to the following two conditions: (1) This device may not cause harmful interference, and (2) this device must accept any interference received, including interference that may cause undesired operation.
Changes or modifications not expressly approved by the manufacturer could void the user's authority to operate the equipment.
To ensure compliance with all non-transmitter functions the host manufacturer is responsible for ensuring compliance with the module(s) installed and fully operational. For example, if a host was previously authorized as an unintentional radiator under the Supplier's Declaration of Conformity procedure without a transmitter certified module and a module is added, the host manufacturer is responsible for ensuring that the after the module is installed and operational the host continues to be compliant with the Part 15B unintentional radiator requirements.

Manual Information To the End User

The OEM integrator has to be aware not to provide information to the end user regarding how to install or remove this RF module in the user's manual of the end product which integrates this module. The end user manual shall include all required regulatory information/warning as show in this manual.

IC Statement

IRSS-GEN
"This device complies with Industry Canada's licence-exempt RSSs. Operation is subject to the following two conditions: (1) This device may not cause interference; and (2) This device must accept any

interference, including interference that may cause undesired operation of the device." or "Le présent appareil est conforme aux CNR d'Industrie Canada applicables aux appareils radio exempts de licence. L'exploitation est autorisée aux deux conditions suivantes :
1) l'appareil ne doit pas produire de brouillage; 2) l'utilisateur de l'appareil doit accepter tout brouillage radioélectrique subi, même si le brouillage est susceptible d'en compromettre le fonctionnement."
Déclaration sur l'exposition aux rayonnements RF
L'autre utilisé pour l'émetteur doit être installé pour fournir une distance de séparation d'au moins 20 cm de toutes les personnes et ne doit pas être colocalisé ou fonctionner conjointement avec une autre antenne ou un autre émetteur.
The host product shall be properly labeled to identify the modules within the host product.
The Innovation, Science and Economic Development Canada certification label of a module shall be clearly visible at all times when installed in the host product; otherwise, the host product must be labeled to display the Innovation, Science and Economic Development Canada certification number for the module, preceded by the word "Contains" or similar wording expressing the same meaning, as follows: "Contains IC: 10224A-2022SC20AX" or "where: 10224A-2022SC20AX is the module's certification number".
Le produit hôte doit être correctement étiqueté pour identifier les modules dans le produit hôte.
L'étiquette de certification d'Innovation, Sciences et Développement économique Canada d'un module doit être clairement visible en tout temps lorsqu'il est installédans le produit hôte; sinon, le produit hôte doit porter une étiquette indiquant le numéro de certification d'Innovation, Sciences et Développement économique Canada pour le module, précédé du mot «Contient» ou d'un libellé semblable exprimant la même signification, comme suit:
"Contient IC: 10224A-2022SC20AX " ou "où: 10224A-2022SC20AX est le numéro de certification du module".

The device is restricted to indoor use only when operating in the 5150 to 5250 MHz frequency range.
L'appareil est réservé à l'intérieur seulement lorsqu'il fonctionne dans la gamme de fréquences 5150 à 5250 MHz