HC08U

Hardware Design

Bluetooth Module Series

Version: 1.0.3

Date: 2022-11-18

Status: Preliminary

At Quectel, our aim is to provide timely and comprehensive services to our customers. If you require any assistance, please contact our headquarters:

Quectel Wireless Solutions Co., Ltd.
Building 5, Shanghai Business Park Phase III (Area B), No.1016 Tianlin Road, Minhang District, Shanghai 200233, China
Tel: +86 21 5108 6236
Email: info@quectel.com

Or our local offices. For more information, please visit:
http://www.quectel.com/support/sales.htm.

For technical support, or to report documentation errors, please visit:
http://www.quectel.com/support/technical.htm.
Or email us at: support@quectel.com.

Legal Notices

We offer information as a service to you. The provided information is based on your requirements and we make every effort to ensure its quality. You agree that you are responsible for using independent analysis and evaluation in designing intended products, and we provide reference designs for illustrative purposes only. Before using any hardware, software or service guided by this document, please read this notice carefully. Even though we employ commercially reasonable efforts to provide the best possible experience, you hereby acknowledge and agree that this document and related services hereunder are provided to you on an “as available” basis. We may revise or restate this document from time to time at our sole discretion without any prior notice to you.

Use and Disclosure Restrictions

License Agreements

Documents and information provided by us shall be kept confidential, unless specific permission is granted. They shall not be accessed or used for any purpose except as expressly provided herein.

Copyright

Our and third-party products hereunder may contain copyrighted material. Such copyrighted material shall not be copied, reproduced, distributed, merged, published, translated, or modified without prior written consent. We and the third party have exclusive rights over copyrighted material. No license shall be granted or conveyed under any patents, copyrights, trademarks, or service mark rights. To avoid ambiguities, purchasing in any form cannot be deemed as granting a license other than the normal non-exclusive, royalty-free license to use the material. We reserve the right to take legal action for noncompliance with abovementioned requirements, unauthorized use, or other illegal or malicious use of the material.

Trademarks

Except as otherwise set forth herein, nothing in this document shall be construed as conferring any rights to use any trademark, trade name or name, abbreviation, or counterfeit product thereof owned by Quectel or any third party in advertising, publicity, or other aspects.

Third-Party Rights

This document may refer to hardware, software and/or documentation owned by one or more third parties ("third-party materials"). Use of such third-party materials shall be governed by all restrictions and obligations applicable thereto.

We make no warranty or representation, either express or implied, regarding the third-party materials, including but not limited to any implied or statutory, warranties of merchantability or fitness for a particular purpose, quiet enjoyment, system integration, information accuracy, and non-infringement of any third-party intellectual property rights with regard to the licensed technology or use thereof. Nothing herein constitutes a representation or warranty by us to either develop, enhance, modify, distribute, market, sell, offer for sale, or otherwise maintain production of any our products or any other hardware, software, device, tool, information, or product. We moreover disclaim any and all warranties arising from the course of dealing or usage of trade.

Privacy Policy

To implement module functionality, certain device data are uploaded to Quectel's or third-party's servers, including carriers, chipset suppliers or customer-designated servers. Quectel, strictly abiding by the relevant laws and regulations, shall retain, use, disclose or otherwise process relevant data for the purpose of performing the service only or as permitted by applicable laws. Before data interaction with third parties, please be informed of their privacy and data security policy.

Disclaimer

a) We acknowledge no liability for any injury or damage arising from the reliance upon the information.
b) We shall bear no liability resulting from any inaccuracies or omissions, or from the use of the information contained herein.
c) While we have made every effort to ensure that the functions and features under development are free from errors, it is possible that they could contain errors, inaccuracies, and omissions. Unless otherwise provided by valid agreement, we make no warranties of any kind, either implied or express, and exclude all liability for any loss or damage suffered in connection with the use of features and functions under development, to the maximum extent permitted by law, regardless of whether such loss or damage may have been foreseeable.
d) We are not responsible for the accessibility, safety, accuracy, availability, legality, or completeness of information, advertising, commercial offers, products, services, and materials on third-party websites and third-party resources.

Copyright © Quectel Wireless Solutions Co., Ltd. 2022. All rights reserved.

Safety Information

The following safety precautions must be observed during all phases of operation, such as usage, service or repair of any cellular terminal or mobile incorporating the module. Manufacturers of the cellular terminal should notify users and operating personnel of the following safety information by incorporating these guidelines into all manuals of the product. Otherwise, Quectel assumes no liability for customers' failure to comply with these precautions.

	Full attention must be paid to driving at all times in order to reduce the risk of an accident. Using a mobile while driving (even with a handsfree kit) causes distraction and can lead to an accident. Please comply with laws and regulations restricting the use of wireless devices while driving.
	Switch off the cellular terminal or mobile before boarding an aircraft. The operation of wireless appliances in an aircraft is forbidden to prevent interference with communication systems. If there is an Airplane Mode, it should be enabled prior to boarding an aircraft. Please consult the airline staff for more restrictions on the use of wireless devices on an aircraft.
	Wireless devices may cause interference on sensitive medical equipment, so please be aware of the restrictions on the use of wireless devices when in hospitals, clinics or other healthcare facilities.
	Cellular terminals or mobiles operating over radio signal and cellular network cannot be guaranteed to connect in certain conditions, such as when the mobile bill is unpaid or the (U)SIM card is invalid. When emergency help is needed in such conditions, use emergency call if the device supports it. In order to make or receive a call, the cellular terminal or mobile must be switched on in a service area with adequate cellular signal strength. In an emergency, the device with emergency call function cannot be used as the only contact method considering network connection cannot be guaranteed under all circumstances.
	The cellular terminal or mobile contains a transceiver. When it is ON, it receives and transmits radio frequency signals. RF interference can occur if it is used close to TV sets, radios, computers or other electric equipment.
	In locations with explosive or potentially explosive atmospheres, obey all posted signs and turn off wireless devices such as mobile phone or other cellular terminals. Areas with explosive or potentially explosive atmospheres include fuelling areas, below decks on boats, fuel or chemical transfer or storage facilities, and areas where the air contains chemicals or particles such as grain, dust or

metal powders.

About the Document

Revision History

Version	Date	Author	Description
-	2022-08-03	Wain ZHAO/ Soni RAO	Creation of the document
1.0.0	2022-08-03	Wain ZHAO/ Soni RAO	Preliminary
1.0.1	2022-08-17	Wain ZHAO/ Soni RAO	Preliminary: 1. Updated Pin Assignment (Figure 6); 2. Updated RF characteristics (Table 4 & 5) 3. Updated Power Consumption (Table 6).
1.0.2	2022-08-22	Wain ZHAO/ Soni RAO	Preliminary: 1. Updated power management (Chapter 1.3); 2. Updated software information (Chapter 1.3) 3. Updated power consumption (Table 7)
1.0.3	2022-11-18	Wain ZHAO/ Emotion CHEN	Preliminary: 1 Updated some TBD data (Chapter 2); 2 Updated Top and Bottom Views of the module (Chapter 3.2); 3 Updated the ramp-up slope and cool-down slope (Figure 11 & Table 10).

Contents

Safety Information **3**

About the Document **5**

Table Index **7**

Figure Index **8**

1 Introduction **9**
- 1.1. Description 9
- 1.2. Special Mark 9
- 1.3. Module Specifications 9
- 1.4. Development Board 10
- 1.5. Interfaces Description 10
  - 1.5.1. Power 10
  - 1.5.2. Reset 11
  - 1.5.3. GPIOs 11
  - 1.5.4. UART 11
  - 1.5.5. I2C* 12
  - 1.5.6. SPI* 12
  - 1.5.7. ADC 13
  - 1.5.8. BOOT 13
- 1.6. Module Performance 14
- 1.7. Pin Description 15

2 Electronic Characteristic **18**
- 2.1. Recommended Operating Conditions 18
- 2.2. BLE RF Characteristics 18
  - 2.2.1. BLE Transmitter 18
  - 2.2.2. BLE Receiver 19
- 2.3. Power Consumption 19
- 2.4. ESD 19
- 2.5. Thermal Consideration 20

3 Mechanical Dimensions **21**
- 3.1. Mechanical Dimensions 21
- 3.2. Top and Bottom Views 23

4 Storage, Manufacturing & Packaging **24**
- 4.1. Storage Conditions 24
- 4.2. Manufacturing and Soldering 25
- 4.3. Packaging 27

5 Appendix Reference **28**

Table Index

Table 1: Special Mark 9
Table 2: Specification 14
Table 3: Pin Description 15
Table 4: Recommended Operating Conditions 18
Table 5: RF Characteristics (Supply Voltage = 3.3 V @ 25 °C) 18
Table 6: RF Characteristics (Supply Voltage = 3.3 V @ 25 °C) 19
Table 7: Power Consumption (3.3 V, 25 °C, 5 ±2dBm Tx) 19
Table 8: ESD Characteristics (Temperature: 25 ºC, Humidity: 45 %) 19
Table 9: Mechanical Dimensions (Top View) 21
Table 10: Recommended Thermal Profile Parameters 25
Table 11: Terms and Abbreviations 28

Figure Index

Figure 2 : Reset Timing 11
Figure 3 : UART Interface 12
Figure 4 : SPI Connection 12
Figure 5 : SPI Timing 13
Figure 6 : Pin Assignment 15
Figure 7 : Placement and Fixing of the Heatsink 20
Figure 8 : HC08U Size Information 21
Figure 9 : PCB Package Size 22
Figure 10 : Top and Bottom Views 23
Figure 11 : Reflow Soldering Thermal Profile 25
Figure 12 : Reels 27

1 Introduction

1.1. Description

HC08U is a power-optimized true system-on-chip (SoC) solution for both Bluetooth low energy and proprietary 2.4 GHz applications. It integrates a high performance and low power RF transceiver with Bluetooth baseband and rich peripheral I/O extension.

HC08U also integrates a power management to provide high-efficient power management. It targets 2.4 GHz Bluetooth low energy systems, proprietary 2.4 GHz systems, Human-Interface Devices (keyboard, mouse, and remote control), sports and leisure equipment, mobile phone accessories and consumer electronics.

1.2. Special Mark

Table 1: Special Mark

Marks	Definitions
*	Unless otherwise specified, when an asterisk (*) is used after a function, feature, interface, pin name, AT command, or argument, it indicates that the function, feature, interface, pin, AT command, or argument is under development and currently not supported; and the asterisk (*) after a model indicates that the sample of such model is currently unavailable.

1.3. Module Specifications

Processor

- 32-bit RISC MCU, max. 64 MHz
- Dedicated Link Layer Processor
- Supports Over-The-Air Upgrade (OTA)
- Support debug mode

Power management

- Supply voltage range 1.8 V–3.6 V
- 5.906 mA peak current in Rx
- 3.2 mA peak current in Tx
- 17.842 μA in sleep mode
- 3.067 μA in deep sleep mode
- Integrated DC-DC buck converter

Software

- Full compliant with BLE 5.1, complete power-optimized stack, including controller and host
- Support BLE sample applications and profiles

Memory

- 64 KB SRAM
- 48 KB ROM
- 4 Mb sflash

Clocks

- 32.768 kHz crystal oscillator clock, 32.768 kHz RC clock
- 32 MHz crystal oscillator clock, 32 MHz RC clock

RF transceiver

- -92 dBm Rx sensitivity @ 1 Mbps
- -87 dBm Rx sensitivity @ 2 Mbps
- Tx power 5±2 dBm

1.4. Development Board

To help customers develop applications with HC08U conveniently, Quectel supplies the corresponding development board. The development board tool includes an EVB, a USB 2.0 data cable, an antenna and other external equipment used for control and test modules.

1.5. Interfaces Description

1.5.1. Power

Standard 1.8 V to 3.6 V power supply power ripple ≤ 50 mV, 3.3 V recommended.

1.5.2. Reset

Support hardware reset, Low effective Reset time ≥ 50 ms

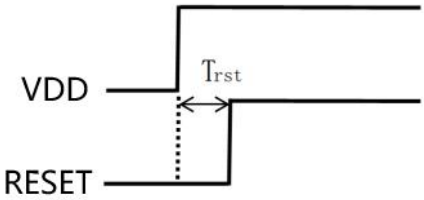

Figure 2: Reset Timing

1.5.3. GPIOs

HC08U has up to 17 software-configurable I/O pins.

- Fully programmable pin assignment;
- Selectable pull-up, pull-down resistors per pin;
- GPIO (2, 3, 7, 8, 9, 10) ability to be configured as GP-ADC input;
- Pins retain their last state when system enters the sleep mode;
- Ability to wakeup chip by any GPIOs in sleep mode.

1.5.4. UART

The UART is modeled after the industry-standard 16550. However, the register address space has been relocated to 32-bit data boundaries for APB bus implementation.

The UART is used for serial communication with a peripheral, modem (data carrier equipment, DCE) or data set. Data is written from a master (CPU) over the APB bus to the UART and it is converted to serial form and transmitted to the destination device. Serial data is also received by the UART and stored for the master (CPU) to read back.

The UART contains registers to control the character length, baud rate, parity generation/checking, and interrupt generation. Although there is only one interrupt output signal from the UART, there are several prioritized interrupt types that can be responsible for its assertion. Each of the interrupt types can be separately enabled or disabled by the control registers.

HC08U has 2 UART; the UART0 is a common 2 wire (transmitter and receiver) controller, and the UART1 support stream control (CTS/RTS).

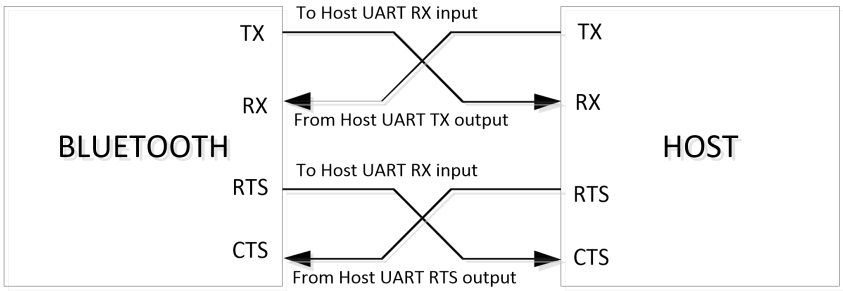

Figure 3: UART Interface

1.5.5. I2C*

The I2C is a master or slave interface. It supports 100 kHz, 400 kHz and 800 kHz clock rates for controlling EEPROM and etc. The interface provides several data formats and can fit various I2C peripherals. Sequential read and write are supported to improve throughputs. It also supports DMA operation for extra MCU free data transfer. The I2C work as either master or slave, but cannot change the working mode after configuration.

1.5.6. SPI*

The Serial Peripheral Interface (SPI) bus is a synchronous serial communication interface specification used for short distance communication, primarily in embedded systems. The module integrates 2 SPI, and they can work in either master or slave mode and also support DMA or software mode to transfer data.

The master or slave controller only supports point to point connection by hardware, that is, both SPI has only one CS pin. The connection is shown below the figure:

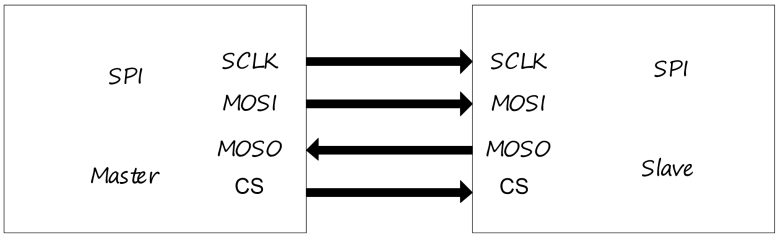

Figure 4: SPI Connection

The flexibility of SPI makes it suitable for most SPI slave devices. SPI offers four modes due to the programmable ability of SCLK's polarity and phase. The delay from CS to SCLK, the delay from SCLK to CS and SCLK period are also programmable. SPI timing diagram is shown in figure below.

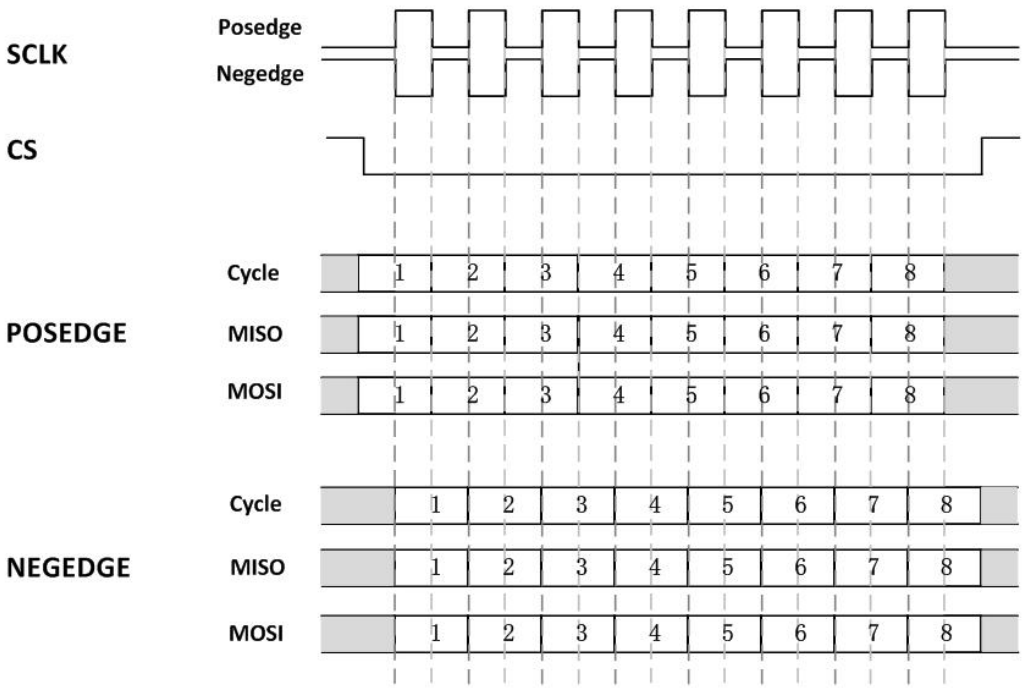

Figure 5: SPI Timing

1.5.7. ADC

The module is equipped with a high-speed low power 12-bit general purpose Analog-to-Digital Converter (GP-ADC). It can operate in unipolar (single ended) mode as well as in bipolar (differential) mode.

The ADC has its own voltage regulator (LDO) of 1.0 V, which represents the full-scale reference voltage.

- 12-bit dynamic ADC with 1 μs conversion time
- Maximum sampling rate 1M sample/s
- Single-ended as well as differential input with two input scales
- Single-ended or differential external input channels
- 4 single-ended external input channels
- Battery monitoring function
- Chopper function
- Offset and zero scale adjust
- Common-mode input level adjust

1.5.8. BOOT

Pull down when firmware upgrade. Pull up or NC when normal working.

1.6. Module Performance

Table 2: Specification

Specification		HC08U
Bluetooth	Bluetooth specification	BLE 5.1
	Bluetooth class type	Class 1.5
	Distance	50 m (open area）
	Antenna	external antenna
	Transmitting power	5±2 dBm
	Receive sensitivity	-92 dBm @ 1 Mbps -87 dBm @ 2 Mbps
	Modulation	GFSK
Hardware interface		VCC, RESET, GPIO, UART, I2C, SPI, ADC, BOOT
Operating Voltage		1.8 V to 3.6 V
Operating temperature		-40 to +85 °C
Storage temperature		-40 to +125 °C
Size		15 mm × 12 mm × 2.5 mm (Tolerance: ±0.2 mm, with shield)
Shield case		Yes

1.7. Pin Description

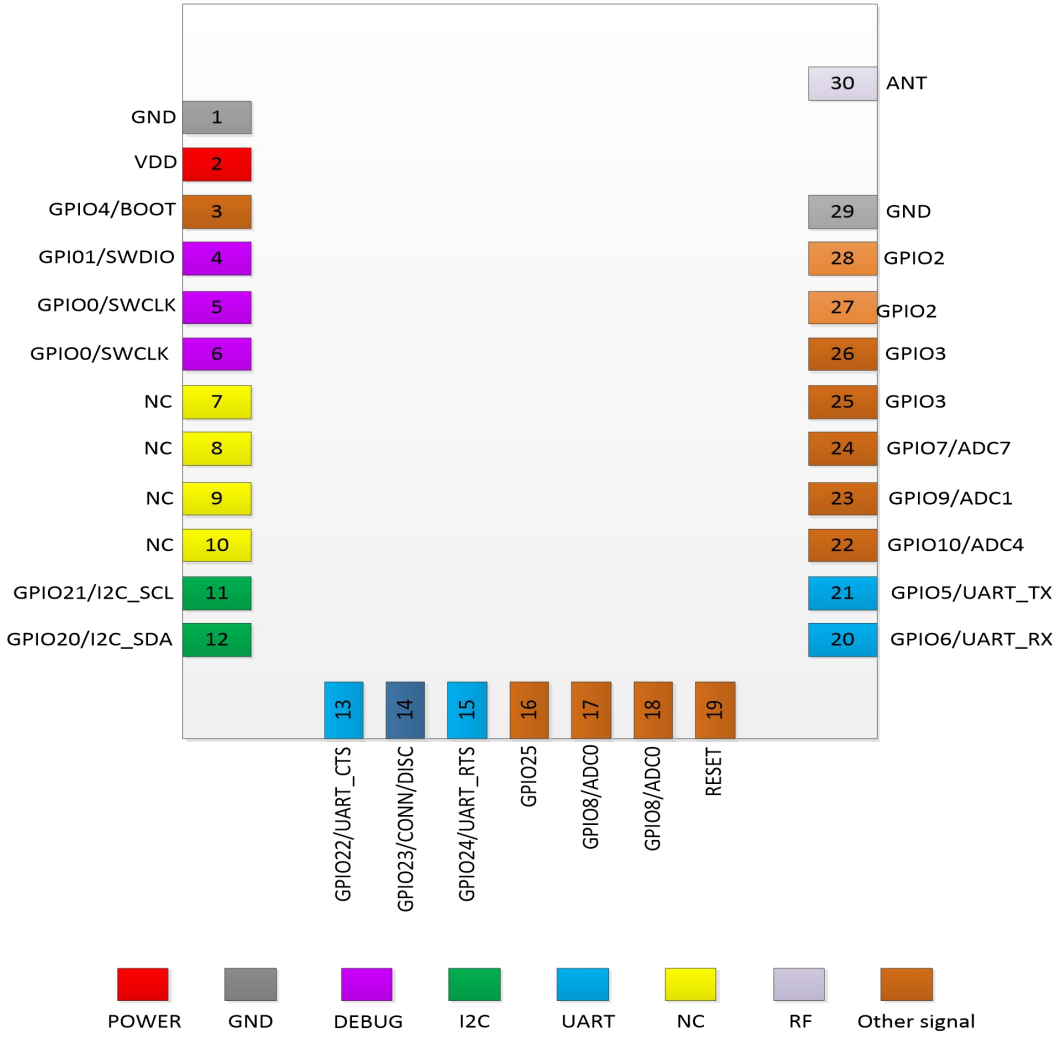

Figure 6: Pin Assignment

Table 3: Pin Description

Pin No.	Pin description	Functions
1	GND	Ground
2	VDD	1.8 V to 3.6 V power supply, 3.3 V recommended. Need external 10 μF and 0.1 μF capacitors connected to this pin.
3	GPIO4/BOOT	Pull down when firmware upgrade, pull up or NC when normal working.

4	GPIO1/SWDIO	Configurable GPIO, NC if unused.
5, 6	GPIO0/SWCLK	Configurable GPIO, NC if unused.
7	NC	Not Connected
8	NC	Not Connected
9	NC	Not Connected
10	NC	Not Connected
11	GPIO21/I2C_SCL	Configurable GPIO, NC if unused.
12	GPIO20/I2C_SDA	Configurable GPIO, NC if unused.
13	GPIO22/UART_CTS	UART flow control, Clear-To-Send, pull up prohibited sending data, pull down to send. Pull down if unused.
14	GPIO23/CONN/DISC	Configurable GPIO, Default DICS pin. Pull up into working mode. Pull down more than 100 ms to disconnect the Bluetooth connection. NC if unused.
15	GPIO24/UART_RTS	UART flow control, Request-To-Send. When the Bluetooth serial port buffer is full, this pin will be pulled up, notify the master computer to stop serial port sending; When the buffer is sufficient, this pin will be pulled down and allow the master computer to continue to send data through the serial port. NC if unused.
16	GPIO25	Configurable GPIO, Default conn_status pin Bluetooth connected is high, unconnected is low. NC if unused.
17, 18	GPIO8/ADC0	Configurable GPIO, NC if unused, Support ADC
19	RESET	Hardware reset NC if unused; pull down time > 50 ms if used.
20	GPIO6/UART_RX	UART data receive
21	GPIO5/UART_TX	UART data send
22	GPIO10/ADC4	Configurable GPIO, NC if unused, Support ADC
23	GPIO9/ADC1	Configurable GPIO, NC if unused, Support ADC
24	GPIO7/ADC7	Configurable GPIO, NC if unused, Support ADC
25, 26	GPIO3	Configurable GPIO, NC if unused.
27, 28	GPIO2	Configurable GPIO, NC if unused.

29	GND	Ground
30	ANT	RF Antenna

NOTE

All digital I/O ports can be configured as any function of GPIO.

2 Electronic Characteristic

2.1. Recommended Operating Conditions

Table 4: Recommended Operating Conditions

Operating mode	Min.	Typ.	Max.	Unit
Storage temperature	-40	-	125	°C
Operating Temperature	-40	-	85	°C
VDD power supply	1.8	3.3	3.6	V

2.2. BLE RF Characteristics

2.2.1. BLE Transmitter

Table 5: RF Characteristics (Supply Voltage = 3.3 V @ 25 °C)

Parameter	Conditions	Min.	Typ.	Max.	Unit
Frequency range	-	2402	-	2480	MHz
Max RF transmit power	-	4.57	5.03	5.97	dBm
Δf 2avg /Δf 1avg	Uncoded data at 1 Ms/s		0.88	-	-
Δf 2avg /Δf 1avg	Uncoded data at 2 Ms/s		0.90	-	-
Frequency offset	Uncoded data at 1 Ms/s	-	15.1	-	kHz
Frequency offset	Uncoded data at 2 Ms/s	-	17.7	-	kHz

2.2.2. BLE Receiver

Table 6: RF Characteristics (Supply Voltage = 3.3 V @ 25 °C)

Parameter	Conditions	Min.	Typ.	Max.	Unit
Frequency range	-	2402	-	2480	MHz
Rx Sensitivity @ 1 Mbps	PER = 30.8 %	-	-92	-	dBm
Rx Sensitivity @ 2 Mbps	PER = 30.8 %	-	-87	-	dBm

2.3. Power Consumption

Table 7: Power Consumption (3.3 V, 25 °C, 5±2 dBm Tx)

Operating Modes	LDO Typical	Unit
Deep sleep	3.067	μA
Sleep	17.842	uA
Tx	3.2	mA
Rx	5.906	mA

2.4. ESD

Static electricity occurs naturally and it may damage the module. Therefore, applying proper ESD countermeasures and handling methods is imperative. For example, wear anti-static gloves during the development, production, assembly and testing of the module; add ESD protection components to the ESD sensitive interfaces and points in the product design.

Table 8: ESD Characteristics (Temperature: 25 ºC, Humidity: 45 %)

Tested Interfaces	Contact Discharge	Air Discharge	Unit
VDD	±8	±12	kV

GND	±8	±12	kV
ANT	±5	±10	kV

2.5. Thermal Consideration

The module offers the best performance when all internal IC chips are working within their operating temperatures. When the IC chip reaches or exceeds the maximum junction temperature, the module may still work but the performance and function (such as RF output power, data rate, etc.) will be affected to a certain extent. Therefore, the thermal design should be maximally optimized to ensure all internal IC chips always work within the recommended operating temperature range.

The following principles for thermal consideration are provided for reference:

- Keep the module away from heat sources on your PCB, especially high-power components such as processor, power amplifier, and power supply.
- Maintain the integrity of the PCB copper layer and drill as many thermal vias as possible.
- Follow the principles below when the heatsink is necessary:
  - Do not place large size components in the area where the module is mounted on your PCB to reserve enough place for heatsink installation.
  - Attach the heatsink to the shielding cover of the module; In general, the base plate area of the heatsink should be larger than the module area to cover the module completely;
  - Choose the heatsink with adequate fins to dissipate heat;
  - Choose a TIM (Thermal Interface Material) with high thermal conductivity, good softness and good wettability and place it between the heatsink and the module;
  - Fasten the heatsink with four screws to ensure that it is in close contact with the module to prevent the heatsink from falling off during the drop, vibration test, or transportation.

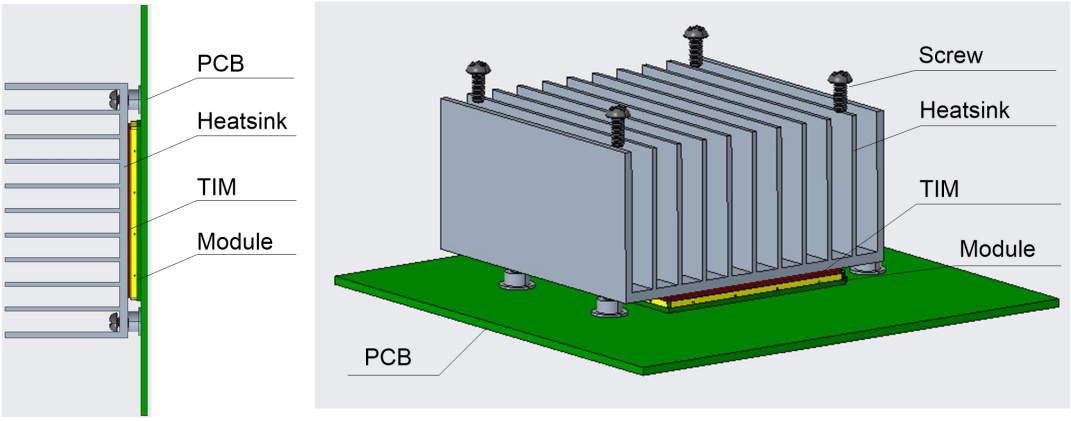

Figure 7: Placement and Fixing of the Heatsink

3 Mechanical Dimensions

3.1. Mechanical Dimensions

Table 9: Mechanical Dimensions (Top View)

Module	PCB Package	Mechanical Size	Process Type
HC08U	Stamp holes	15 mm × 12 mm × 2.5 mm (Tolerance: ±0.2 mm, with shield)	SMD

The detailed size information of HC08U is as follows:

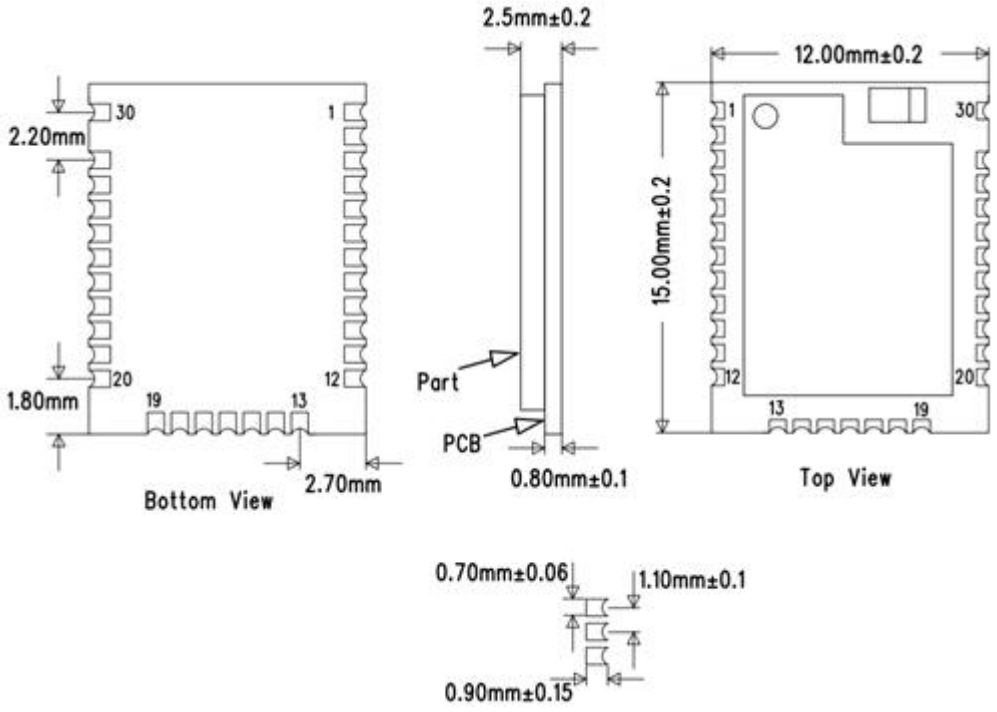

Figure 8: HC08U Size Information

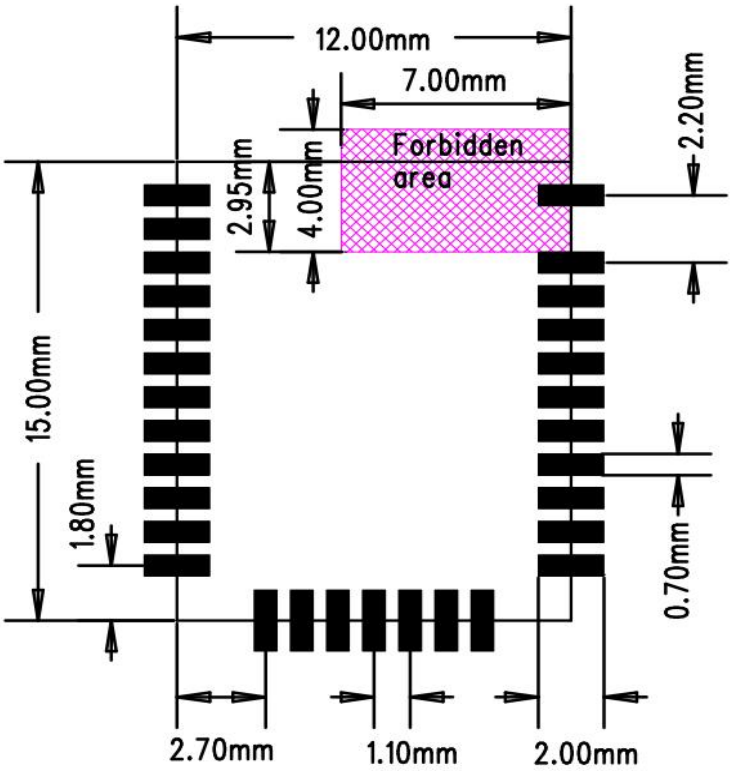

Figure 9: PCB Package Size

NOTE

The package warpage level of the module conforms to the *JEITA ED-7306* standard.

3.2. Top and Bottom Views

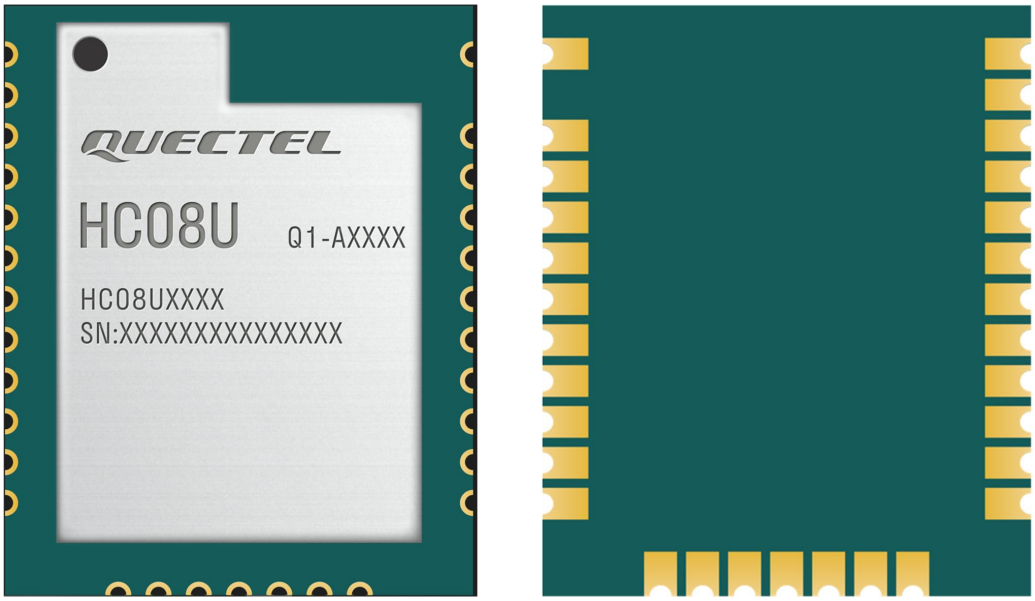

Figure 10: Top and Bottom Views

4 Storage, Manufacturing & Packaging

4.1. Storage Conditions

The module is provided with vacuum-sealed packaging. MSL of the module is rated as 3. The storage requirements are shown below.

1. Recommended Storage Condition: the temperature should be 23 ±5 °C and the relative humidity should be 35–60 %.

2. Shelf life (in a vacuum-sealed packaging): 12 months in Recommended Storage Condition.

3. Floor life: 168 hours [1] in a factory where the temperature is 23 ±5 °C and relative humidity is below 60 %. After the vacuum-sealed packaging is removed, the module must be processed in reflow soldering or other high-temperature operations within 168 hours. Otherwise, the module should be stored in an environment where the relative humidity is less than 10 % (e.g., a dry cabinet).

4. The module should be pre-baked to avoid blistering, cracks and inner-layer separation in PCB under the following circumstances:

   - The module is not stored in Recommended Storage Condition;
   - Violation of the third requirement mentioned above;
   - Vacuum-sealed packaging is broken, or the packaging has been removed for over 24 hours;
   - Before module repairing.

5. If needed, the pre-baking should follow the requirements below:

   - The module should be baked for 8 hours at 120 ±5 °C;
   - The module must be soldered to PCB within 24 hours after the baking, otherwise it should be put in a dry environment such as in a dry cabinet.

NOTE

[1] This floor life is only applicable when the environment conforms to *IPC/JEDEC J-STD-033*. It is recommended to start the solder reflow process within 24 hours after the package is removed if the temperature and moisture do not conform to, or are not sure to conform to *IPC/JEDEC J-STD-033*. And do not remove the packages of tremendous modules if they are not ready for soldering.

1. To avoid blistering, layer separation and other soldering issues, extended exposure of the module to the air is forbidden.
2. Take out the module from the package and put it on high-temperature-resistant fixtures before baking. If shorter baking time is desired, see *IPC/JEDEC J-STD-033* for the baking procedure.
3. Pay attention to ESD protection, such as wearing anti-static gloves, when touching the modules.

4.2. Manufacturing and Soldering

Push the squeegee to apply the solder paste on the surface of stencil, thus making the paste fill the stencil openings and then penetrate to the PCB. Apply proper force on the squeegee to produce a clean stencil surface on a single pass. To guarantee module soldering quality, the thickness of stencil for the module is recommended to be 0.13–0.15 mm.

The recommended reflow temperature should be 235–246 ºC, with 246 ºC as the absolute maximum reflow temperature. To avoid damage to the module caused by repeated heating, it is suggested that the module should be mounted only after reflow soldering for the other side of PCB has been completed. The recommended reflow soldering thermal profile (lead-free reflow soldering) and related parameters are shown below:

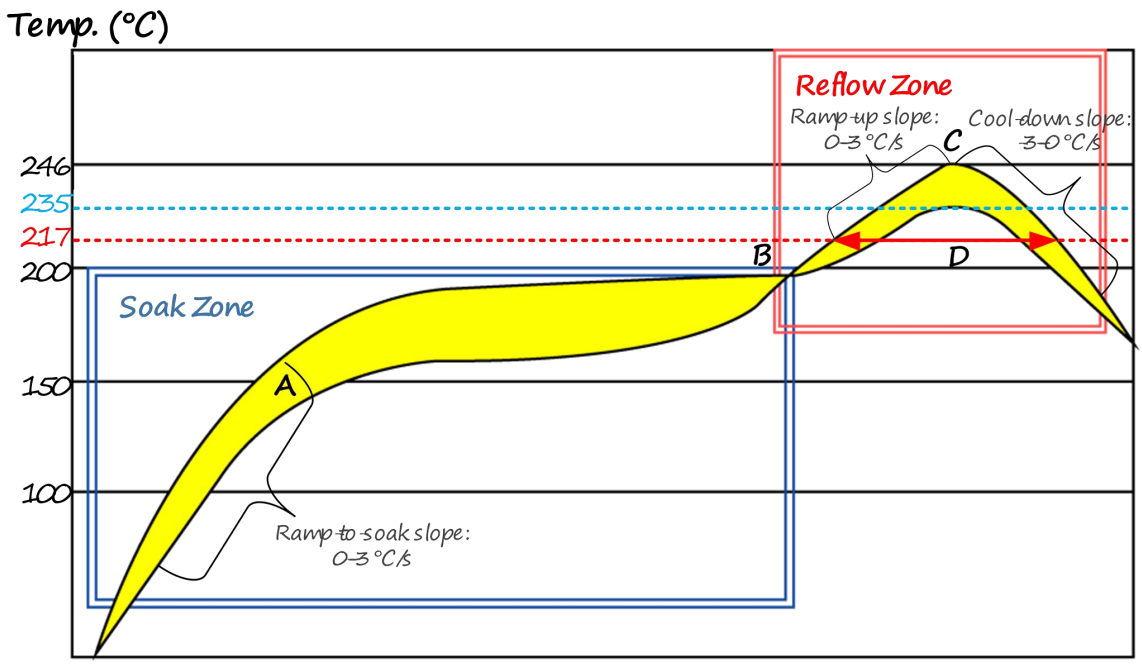

Figure 11: Reflow Soldering Thermal Profile

Table 10: Recommended Thermal Profile Parameters

Factor	Recommended Value
Soak Zone	
Ramp-to-soak slope	0–3 °C/s
Soak time (between A and B: 150 °C and 200 °C)	70–120 s
Reflow Zone	
Ramp-up slope	0–3 °C/s
Reflow time (D: over 217°C)	40–70 s
Max temperature	235–246 °C
Cool-down slope	-3–0 °C/s
Reflow Cycle	
Max reflow cycle	1

4.3. Packaging

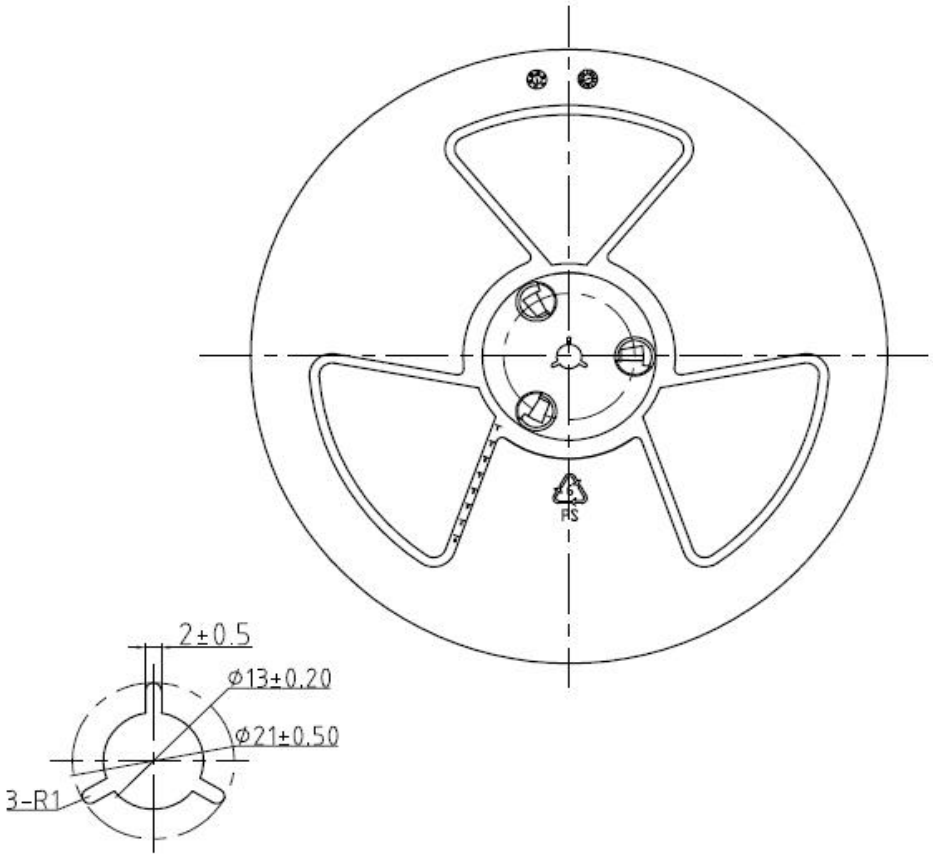

MATERIAL ; PS COLOR :BLUE

Width	12mm	16mm	24mm	32mm	44mm	56mm	72mm	88mm
W1	13.5	17.5	25.5	33.5	45.5	57.5	74.0	90
W2	17.5	21.5	29.5	37.5	49.5	61.5	78.0	94

Figure 12: Reels

5 Appendix Reference

Table 11: Terms and Abbreviations

Abbreviation	Description
AP	Access Point
APS	Advanced Peripheral Bus
BLE	Bluetooth Low Energy
BPSK	Binary Phase Shift Keying
BT	Bluetooth
CCK	Complementary Code Keying
CTS	Clear To Send
DQPSK	Differential Quadrature Reference Phase Shift Keying
GATT	Generic Attribute Profile
GND	Ground
HT	High Throughput
IEEE	Institute of Electrical and Electronics Engineers
I/O	Input/Output
Mbps	Million Bits Per Second
QAM	Quadrature Amplitude Modulation
QPSK	Quadrature Phase Shift Keying
RF	Radio Frequency
RoHS	Restriction of Hazardous Substances
STA	Spike-triggered average

RTS	Request to Send
RXD	Receive Data
TBD	To Be Determined
TXD	Transmit Data
UART	Universal Asynchronous Receiver/Transmitter
USB	Universal Serial Bus
V_{IH}max	Maximum High-level Input Voltage
V_{IH}min	Minimum High-level Input Voltage
V_{IL}max	Maximum Low-level Input Voltage
V_{IL}min	Minimum Low-level Input Voltage
V_{OL}max	Maximum Low-level Output Voltage
V_{OH}min	Minimum High-level Output Voltage
Vnom	Normal Voltage
VSWR	Voltage Standing Wave Ratio

CE Statement

The minimum distance between the user and/or any bystander and the radiating structure of the transmitter is 20cm.

Hereby, We, Quectel Wireless Solutions Co., Ltd. declares that the radio equipment type **HC08U** is in compliance with the Directive 2014/53/EU.

The full text of the EU declaration of conformity is available at the following internet address:

Building 5, Shanghai Business Park Phase III (Area B), No.1016 Tianlin Road, Minhang District, Shanghai 200233, China

https://www.quectel.com.

The device operates with the following frequency bands and transmitting power:

Band	Tx (MHz)	Rx (MHz)	The Maximum (EIRP) Transmitted Power (dBm)
Bluetooth LE	2402 ~ 2480	2402 ~ 2480	5.0 dBm

FCC Certification Requirements.

According to the definition of mobile and fixed device is described in Part 2.1091(b), this device is a mobile device.

And the following conditions must be met:

1. This Modular Approval is limited to OEM installation for mobile and fixed applications only. The antenna installation and operating configurations of this transmitter, including any applicable source-based time-averaging duty factor, antenna gain and cable loss must satisfy MPE categorical Exclusion Requirements of 2.1091.

2. The EUT is a mobile device; maintain at least a 20 cm separation between the EUT and the user's body and must not transmit simultaneously with any other antenna or transmitter.

3.A label with the following statements must be attached to the host end product: This device contains **FCC ID: XMR2022HC08U.**

4.To comply with FCC regulations limiting both maximum RF output power and human exposure to RF radiation, maximum antenna gain (including cable loss) must not exceed:

❒ Bluetooth LE:≤ 0 dBi

5. This module must not transmit simultaneously with any other antenna or transmitter

6. The host end product must include a user manual that clearly defines operating requirements and conditions that must be observed to ensure compliance with current FCC RF exposure guidelines.

For portable devices, in addition to the conditions 3 through 6 described above, a separate approval is required to satisfy the SAR requirements of FCC Part 2.1093

If the device is used for other equipment that separate approval is required for all other operating configurations, including portable configurations with respect to 2.1093 and different antenna configurations.

For this device, OEM integrators must be provided with labeling instructions of finished products. Please refer to KDB784748 D01 v07, section 8. Page 6/7 last two paragraphs:

A certified modular has the option to use a permanently affixed label, or an electronic label. For a permanently affixed label, the module must be labeled with an FCC ID - Section 2.926 (see 2.2 Certification (labeling requirements) above). The OEM manual must provide clear instructions explaining to the OEM the labeling requirements, options and OEM user manual instructions that are required (see next paragraph).

For a host using a certified modular with a standard fixed label, if (1) the module's FCC ID is not visible when installed in the host, or (2) if the host is marketed so that end users do not have straightforward commonly used methods for access to remove the module so that the FCC ID of the module is visible; then an additional permanent label referring to the enclosed module:"Contains Transmitter Module **FCC ID: XMR2022HC08U**" or "Contains **FCC ID: XMR2022HC08U**" must be used. The host OEM user manual must also contain clear instructions on how end users can find and/or access the module and the FCC ID.

The final host / module combination may also need to be evaluated against the FCC Part 15B criteria for unintentional radiators in order to be properly authorized for operation as a Part 15 digital device.

The user's manual or instruction manual for an intentional or unintentional radiator shall caution the user that changes or modifications not expressly approved by the party responsible for compliance could void the user's authority to operate the equipment. In cases where the manual is provided only in a form other than paper, such as on a computer disk or over the Internet, the information required by this section may be included in the manual in that alternative form, provided the user can reasonably be expected to have the capability to access information in that form.

This device complies with part 15 of the FCC Rules. Operation is subject to the following two conditions: (1) This device may not cause harmful interference, and (2) this device must accept any interference received, including interference that may cause undesired operation.

Changes or modifications not expressly approved by the manufacturer could void the user's authority to operate the equipment.

IC Statement

IRSS-GEN

"This device complies with Industry Canada's licence-exempt RSSs. Operation is subject to the following two conditions: (1) This device may not cause interference; and (2) This device must accept any interference, including interference that may cause undesired operation of the device." or "Le présent appareil est conforme aux CNR d'Industrie Canada applicables aux appareils radio exempts de licence. L'exploitation est autorisée aux deux conditions suivantes :

1) l'appareil ne doit pas produire de brouillage; 2) l'utilisateur de l'appareil doit accepter tout brouillage radioélectrique subi, même si le brouillage est susceptible d'en compromettre le fonctionnement."

Déclaration sur l'exposition aux rayonnements RF

The EUT is a mobile device; maintain at least a 20 cm separation between the EUT and the user's body and must not transmit simultaneously with any other antenna or transmitter.

L'autre utilisé pour l'émetteur doit être installé pour fournir une distance de séparation d'au moins 20 cm de toutes les personnes et ne doit pas être colocalisé ou fonctionner conjointement avec une autre antenne ou un autre émetteur.

To comply with IC regulations limiting both maximum RF output power and human exposure to RF radiation, maximum antenna gain (including cable loss) must not exceed:

- ❒ Bluetooth LE:≤ 0 dBi

The host product shall be properly labelled to identify the modules within the host product.

The Innovation, Science and Economic Development Canada certification label of a module shall be clearly visible at all times when installed in the host product; otherwise, the host product must be labeled to display the Innovation, Science and Economic Development Canada certification number for the module, preceded by the word "Contains" or similar wording expressing the same meaning, as follows:

"Contains IC: **10224A-2022HC08U**" or "where: **10224A-2022HC08U** is the module's certification number".

Le produit hôte doit être correctement étiqueté pour identifier les modules dans le produit hôte.

L'étiquette de certification d'Innovation, Sciences et Développement économique Canada d'un module doit être clairement visible en tout temps lorsqu'il est installédans le produit hôte; sinon, le produit hôte doit porter une étiquette indiquant le numéro de certification d'Innovation, Sciences et Développement économique Canada pour le module, précédé du mot «Contient» ou d'un libellé semblable exprimant la même signification, comme suit:"Contient IC: 10224A-2021BG951A " ou "où: 10224A-2021BG951A est le numéro de certification du module.