AF20 Hardware Design

Wi-Fi&Bluetooth Module Series

Version: 1.1

Date: 2022-10-18

Status: Released

At Quectel, our aim is to provide timely and comprehensive services to our customers. If you require any assistance, please contact our headquarters:

Quectel Wireless Solutions Co., Ltd.
Building 5, Shanghai Business Park Phase III (Area B), No.1016 Tianlin Road, Minhang District, Shanghai 200233, China
Tel: +86 21 5108 6236
Email: info@quectel.com

Or our local offices. For more information, please visit:
http://www.quectel.com/support/sales.htm.
For technical support, or to report documentation errors, please visit:
http://www.quectel.com/support/technical.htm.
Or email us at: support@quectel.com.

Legal Notices

We offer information as a service to you. The provided information is based on your requirements and we make every effort to ensure its quality. You agree that you are responsible for using independent analysis and evaluation in designing intended products, and we provide reference designs for illustrative purposes only. Before using any hardware, software or service guided by this document, please read this notice carefully. Even though we employ commercially reasonable efforts to provide the best possible experience, you hereby acknowledge and agree that this document and related services hereunder are provided to you on an “as available” basis. We may revise or restate this document from time to time at our sole discretion without any prior notice to you.

Use and Disclosure Restrictions

License Agreements

Documents and information provided by us shall be kept confidential, unless specific permission is granted. They shall not be accessed or used for any purpose except as expressly provided herein.

Copyright

Our and third-party products hereunder may contain copyrighted material. Such copyrighted material shall not be copied, reproduced, distributed, merged, published, translated, or modified without prior written consent. We and the third party have exclusive rights over copyrighted material. No license shall be granted or conveyed under any patents, copyrights, trademarks, or service mark rights. To avoid ambiguities, purchasing in any form cannot be deemed as granting a license other than the normal non-exclusive, royalty-free license to use the material. We reserve the right to take legal action for noncompliance with abovementioned requirements, unauthorized use, or other illegal or malicious use of the material.

Trademarks

Except as otherwise set forth herein, nothing in this document shall be construed as conferring any rights to use any trademark, trade name or name, abbreviation, or counterfeit product thereof owned by Quectel or any third party in advertising, publicity, or other aspects.

Third-Party Rights

This document may refer to hardware, software and/or documentation owned by one or more third parties ("third-party materials"). Use of such third-party materials shall be governed by all restrictions and obligations applicable thereto.

We make no warranty or representation, either express or implied, regarding the third-party materials, including but not limited to any implied or statutory, warranties of merchantability or fitness for a particular purpose, quiet enjoyment, system integration, information accuracy, and non-infringement of any third-party intellectual property rights with regard to the licensed technology or use thereof. Nothing herein constitutes a representation or warranty by us to either develop, enhance, modify, distribute, market, sell, offer for sale, or otherwise maintain production of any our products or any other hardware, software, device, tool, information, or product. We moreover disclaim any and all warranties arising from the course of dealing or usage of trade.

Privacy Policy

To implement module functionality, certain device data are uploaded to Quectel's or third-party's servers, including carriers, chipset suppliers or customer-designated servers. Quectel, strictly abiding by the relevant laws and regulations, shall retain, use, disclose or otherwise process relevant data for the purpose of performing the service only or as permitted by applicable laws. Before data interaction with third parties, please be informed of their privacy and data security policy.

Disclaimer

a) We acknowledge no liability for any injury or damage arising from the reliance upon the information.
b) We shall bear no liability resulting from any inaccuracies or omissions, or from the use of the information contained herein.
c) While we have made every effort to ensure that the functions and features under development are free from errors, it is possible that they could contain errors, inaccuracies, and omissions. Unless otherwise provided by valid agreement, we make no warranties of any kind, either implied or express, and exclude all liability for any loss or damage suffered in connection with the use of features and functions under development, to the maximum extent permitted by law, regardless of whether such loss or damage may have been foreseeable.
d) We are not responsible for the accessibility, safety, accuracy, availability, legality, or completeness of information, advertising, commercial offers, products, services, and materials on third-party websites and third-party resources.

Copyright © Quectel Wireless Solutions Co., Ltd. 2022. All rights reserved

Safety Information

The following safety precautions must be observed during all phases of operation, such as usage, service or repair of any cellular terminal or mobile incorporating the module. Manufacturers of the cellular terminal should notify users and operating personnel of the following safety information by incorporating these guidelines into all manuals of the product. Otherwise, Quectel assumes no liability for customers' failure to comply with these precautions.

	Full attention must be paid to driving at all times in order to reduce the risk of an accident. Using a mobile while driving (even with a handsfree kit) causes distraction and can lead to an accident. Please comply with laws and regulations restricting the use of wireless devices while driving.
	Switch off the cellular terminal or mobile before boarding an aircraft. The operation of wireless appliances in an aircraft is forbidden to prevent interference with communication systems. If there is an Airplane Mode, it should be enabled prior to boarding an aircraft. Please consult the airline staff for more restrictions on the use of wireless devices on an aircraft.
	Wireless devices may cause interference on sensitive medical equipment, so please be aware of the restrictions on the use of wireless devices when in hospitals, clinics or other healthcare facilities.
	Cellular terminals or mobiles operating over radio signal and cellular network cannot be guaranteed to connect in certain conditions, such as when the mobile bill is unpaid or the (U)SIM card is invalid. When emergent help is needed in such conditions, use emergency call if the device supports it. In order to make or receive a call, the cellular terminal or mobile must be switched on in a service area with adequate cellular signal strength. In an emergency, the device with emergency call function cannot be used as the only contact method considering network connection cannot be guaranteed under all circumstances.
	The cellular terminal or mobile contains a transceiver. When it is ON, it receives and transmits radio frequency signals. RF interference can occur if it is used close to TV sets, radios, computers or other electric equipment.
	In locations with explosive or potentially explosive atmospheres, obey all posted signs and turn off wireless devices such as mobile phone or other cellular terminals. Areas with explosive or potentially explosive atmospheres include fueling areas, below decks on boats, fuel or chemical transfer or storage facilities, and areas where the air contains chemicals or particles such as grain, dust or

	metal powders.

About the Document

Revision History

Version	Date	Author	Description
-	2019-06-05	Power JIN/Kane ZHU	Creation of the document
1.0	2019-06-05	Power JIN/Kane ZHU	First official release
1.1	2022-10-18	Arrow HUANG	1. Updated the pin 42 from RESERVED to HOST_WAKE_BT; Updated the pin 46 from RESERVED to BT_WAKE_HOST. 2. Added DFS function description (Chapter 2). 3. Updated power consumption and RF performance (Chapter 4.3 and 4.4). 4. Updated the packaging specification information (Chapter 6.3). 5. Updated the module soldering thermal recommendation and related parameters (Figure 24 and Table 25).

Contents

Safety Information 3
About the Document 5
Contents 6
Table Index 8
Figure Index 9

1 Introduction 10
1.1. Special Mark 10

2 Product Overview 11
2.1. Key Features 11
2.2. Functional Diagram 13
2.3. EVB Kit 13

3 Application Interfaces 14
3.1. General Description 14
3.2. Pin Assignment 15
3.3. Pin Description 16
3.4. Power Supply 19
3.5. Wi-Fi Application Interface 21
3.5.1. WLAN_EN 21
3.5.2. SDIO Interface 22
3.6. Bluetooth Application Interface 23
3.6.1. BT_EN 24
3.6.2. PCM Interface 24
3.6.3. Bluetooth UART 25
3.7. Coexistence UART 26
3.8. 32KHZ_IN 26
3.9. RF Antenna Interface 27
3.9.1. Pin Definition of the RF Antenna Interface 27
3.9.2. Operating Frequency 27
3.9.3. Reference Design 27
3.9.4. RF Routing Guidelines 28
3.9.5. Requirements for Antenna Design 30
3.9.6. RF Connector Recommendation 30

4 Electrical Characteristics & Reliability 33
4.1. Absolute Maximum Ratings 33
4.2. Digital I/O Characteristics 33
4.3. Power Consumption 34
4.4. RF Performances 35
4.5. ESD Protection 37

5 Mechanical Information 38

5.1. Mechanical Dimensions 38
5.2. Recommended Footprint 40
5.3. Top and Bottom Views 41

6 Storage, Manufacturing and Packaging 42
6.1. Storage Conditions 42
6.2. Manufacturing and Soldering 43
6.3. Packaging Specification 45
6.3.1. Carrier Tape 45
6.3.2. Plastic Reel 46
6.3.3. Packaging Process 46

7 Appendix References 48

Table Index

Table 1: Special Mark 10
Table 2: Key Features 11
Table 3: I/O Parameters Definition 16
Table 4: Pin Description 16
Table 5: Power Supply Pins and GND Pins 19
Table 6: Pin Definition of WLAN_EN 21
Table 7: Pin Definition of SDIO Interface 22
Table 8: Pin Definition of BT_EN 24
Table 9: Pin Definition of PCM Interface 24
Table 10: Pin Definition of Bluetooth UART Interface 25
Table 11: Pin Definition of Coexistence UART 26
Table 12: Pin Definition of 32KHZ_IN 27
Table 13: Pin Definition of the RF Antenna Interface 27
Table 14: Operating Frequency of the Module 27
Table 15: Antenna Requirements 30
Table 16: Absolute Maximum Ratings 33
Table 17: Recommended Operating Conditions 33
Table 18: Digital I/O Characteristics 33
Table 19: Wi-Fi Power Consumption of the Module (1.8 V and 3.3 V Power Supply) 34
Table 20: Conducted RF Output Power at 2.4 GHz 35
Table 21: Conducted RF Output Power at 5 GHz 35
Table 22: Conducted RF Receiving Sensitivity at 2.4 GHz 36
Table 23: Conducted RF Receiving Sensitivity at 5 GHz 36
Table 24: ESD Characteristics (Temperature: 25 °C, Humidity: 45 %; Unit: kV) 37
Table 25: Recommended Thermal Profile Parameters 44
Table 26: Carrier Tape Dimension Table (Unit: mm) 45
Table 27: Plastic Reel Dimension Table (Unit: mm) 46
Table 28: Related Documents 48
Table 29: Terms and Abbreviations 48

Figure Index

Figure 1: Functional Diagram 13
Figure 2: Pin Assignment (Top View) 15
Figure 3: Reference Circuit for VDD_3V3 20
Figure 4: Turn-on and Turn-off Timing 20
Figure 5: Wi-Fi Application Interface Connection 21
Figure 6: SDIO Interface Connection 23
Figure 7: Block Diagram of Bluetooth Application Interface Connection 24
Figure 8: Reference Design for PCM Interface 25
Figure 9: Reference Design for Bluetooth UART Connection 25
Figure 10: Coexistence UART Connection 26
Figure 11: Reference Circuit for RF Antenna Interface 28
Figure 12: Reference Design of RF Antenna Interface (Vehicle Applications) 28
Figure 13: Microstrip Design on a 2-layer PCB 29
Figure 14: Coplanar Waveguide Design on a 2-layer PCB 29
Figure 15: Coplanar Waveguide Design on a 4-layer PCB (Layer 3 as Reference Ground) 29
Figure 16: Coplanar Waveguide Design on a 4-layer PCB (Layer 4 as Reference Ground) 29
Figure 17: Dimensions of the Receptacle (Unit: mm) 31
Figure 18: Specifications of Mated Plugs (Unit: mm) 31
Figure 19: Space Factor of the Mated Connectors (Unit: mm) 32
Figure 20: Top and Side Dimensions 38
Figure 21: Bottom Dimensions (Bottom View) 39
Figure 22: Recommended Footprint 40
Figure 23: Top and Bottom Views of the Module 41
Figure 24: Recommended Reflow Soldering Thermal Profile 43
Figure 25: Carrier Tape Dimension Drawing 45
Figure 26: Plastic Reel Dimension Drawing 46
Figure 27: Packaging Process 47

1 Introduction

This document defines AF20 module and describes its air interface and hardware interfaces which are connected with your applications.

With this document, you can quickly understand module interface specifications, electrical and mechanical details, as well as other related information of the module. The document, coupled with application notes and user guides, makes it easy to design and set up mobile applications with the module.

1.1. Special Mark

Table 1: Special Mark

Mark	Definition
[…]	Brackets ([…]) used after a pin enclosing a range of numbers indicate all pins of the same type. For example, SDIO_DATA[0:3] refers to all four SDIO pins, SDIO_DATA0, SDIO_DATA1, SDIO_DATA2, SDIO_DATA3.

2 Product Overview

AF20 is an automotive grade Wi-Fi and Bluetooth module with low power consumption. It is a single-die wireless local area network (WLAN) and Bluetooth combo solution supporting IEEE 802.11 a/b/g/n/ac Wi-Fi standards and Bluetooth 5.0 standard, which enables seamless integration of Wi-Fi and Bluetooth Low Energy technologies. And it has DFS function and supports both Master and Slave scenarios.

AF20 supports a low-power SDIO 3.0 interface for WLAN, and UART and PCM interfaces for Bluetooth, and also supports LTE/Wi-Fi & Bluetooth coexistence interface. It is designed to be used in conjunction with Quectel automotive grade LTE module AG35 so as to provide AG35 with Wi-Fi and Bluetooth functions. Connection between AF20 and AG35 via the coexistence interface helps reduce the interference between LTE signal and Wi-Fi/Bluetooth signal.

AF20 is an SMD type module with a compact form factor of 17.2 mm × 15.2 mm × 2.26 mm. It can be embedded in your applications through the 52 LGA pins.

2.1. Key Features

Table 2: Key Features

Features	Implementation
Power Supply	● **VDD_3V3:** 3.14 V–3.46 V Typical value: 3.3 V ● **VDD_I/O:** 1.71 V–1.89 V Typical value: 1.8 V
Operating Frequency	● **2.4 GHz Wi-Fi:** 2.412 GHz–2.472 GHz ● **5 GHz Wi-Fi:** 5.180 GHz–5.825 GHz ● **Bluetooth:** 2.402 GHz–2.480 GHz
Wi-Fi Transmission Data Rates	● **802.11b:** 1 Mbps, 2 Mbps, 5.5 Mbps, 11 Mbps ● **802.11g:** 6 Mbps, 9 Mbps, 12 Mbps, 18 Mbps, 24 Mbps, 36 Mbps, 48 Mbps, 54 Mbps ● **802.11n (20 MHz):** 6.5 Mbps, 13 Mbps, 19.5 Mbps, 26 Mbps, 39 Mbps, 52 Mbps, 58.5 Mbps, 65 Mbps ● **802.11n (40 MHz):** 13.5 Mbps, 27 Mbps, 40.5 Mbps, 54 Mbps, 81 Mbps,

	108 Mbps, 121.5 Mbps, 135 Mbps ● **802.11a:** 6 Mbps, 9 Mbps, 12 Mbps, 18 Mbps, 24 Mbps, 36 Mbps, 48 Mbps, 54 Mbps ● **802.11ac:** VHT20 (MCS 0–8), VHT40 (MCS 0–9), VHT80 (MCS 0–9)
Wi-Fi Transmitting Power	**2.4 GHz** ● 802.11b/11Mbps: 16 dBm ±2.5 dB ● 802.11g/54Mbps: 14 dBm ±2.5 dB ● 802.11n/HT20 MCS7: 13 dBm ±2.5 dB ● 802.11n/HT40 MCS7: 13 dBm ±2.5 dB **5 GHz** ● 802.11a/54Mbps: 11 dBm ±2.5 dB ● 802.11n/HT20 MCS7: 9 dBm ±2.5 dB ● 802.11n/HT40 MCS7: 8 dBm ±2.5 dB ● 802.11ac/VHT20 MCS8: 9 dBm ±2.5 dB ● 802.11ac/VHT40 MCS9： 8 dBm ±2.5 dB ● 802.11ac/VHT80 MCS9: 7 dBm ±2.5 dB
Protocol Features	● IEEE 802.11a/b/g/n/ac Bluetooth 5.0
Wi-Fi Operation Mode	AP, STA
Wi-Fi Modulation	DBPSK/DQPSK/CCK/BPSK/QPSK/16QAM/64QAM/256QAM
Wi-Fi Application Interface	SDIO 3.0
Bluetooth Application Interfaces	UART and PCM
Antenna Interface	● Wi-Fi/Bluetooth antenna interface ● 50 Ω impedance
Physical Characteristics	● Size: (17.20 ±0.20) mm × (15.20 ±0.20) mm × (2.26 ±0.20) mm ● Package: LGA ● Weight: Approx. 1.26 g
Temperature Range	● Operating temperature range: -35 °C to +75 °C [1] ● Extended temperature range: -40 °C to +85 °C [2] ● Storage temperature range: -40 °C to +90 °C
RoHS	All hardware components are fully compliant with EU RoHS directive

[1] Within the operating temperature range, the module's related performance meets IEEE and Bluetooth specifications.
[2] Within the extended temperature range, the module remains the ability for data transmission. There is no unrecoverable malfunction. Radio spectrum and radio network are not influenced, while one or more parameters, such as P_{out}, may undergo a reduction in value, exceeding the specified tolerances. When the temperature returns to within the operating temperature, the module will meet IEEE and Bluetooth specifications again.

2.2. Functional Diagram

The following figure shows a block diagram of AF20 module.

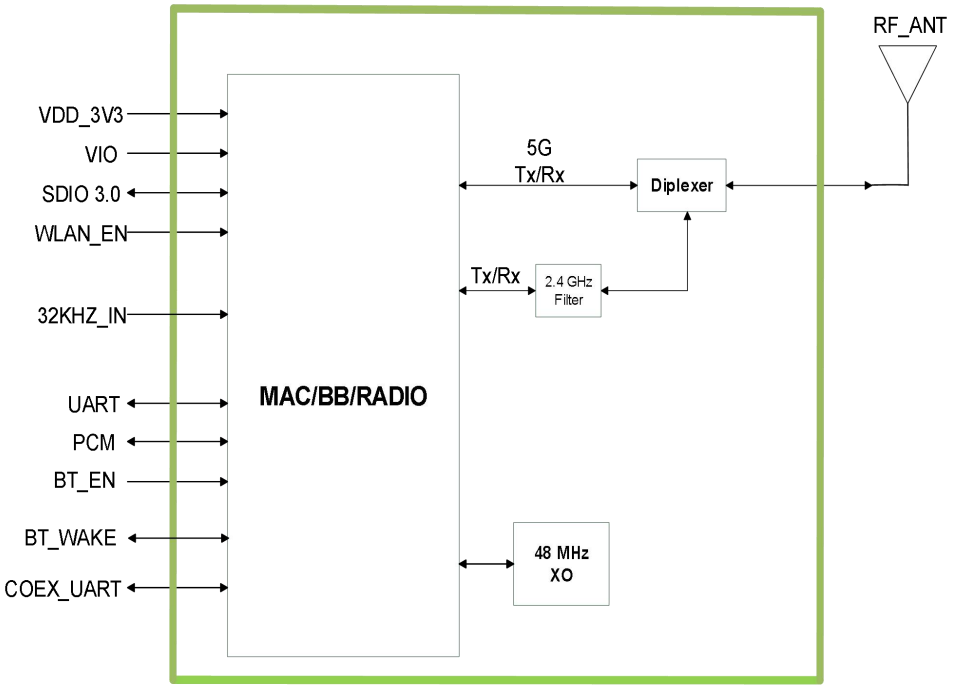

Figure 1: Functional Diagram

2.3. EVB Kit

To help you develop applications with the module, Quectel supplies an evaluation board (UMTS&LTE EVB) with accessories to control or test the module. For more details, see ***document [1]***.

3 Application Interfaces

3.1. General Description

AF20 module is equipped with 52 LGA pins that can be connected to the cellular application platform. The subsequent chapters will provide a detailed introduction on the following module interfaces:

- Power supply
- Wi-Fi application interface
- Bluetooth application interface
- Coexistence UART
- 32KHZ_IN
- Antenna interface

3.2. Pin Assignment

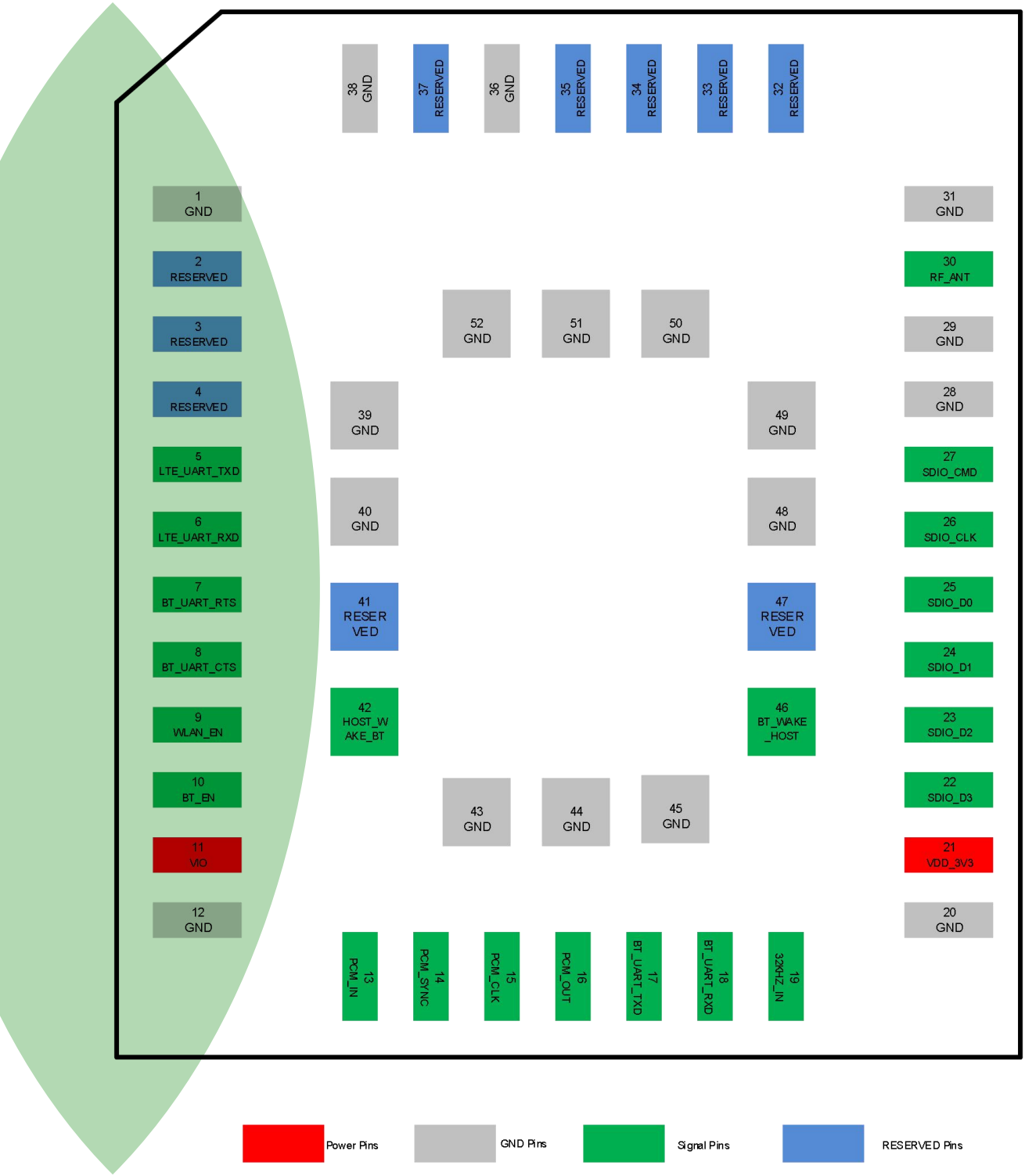

Figure 2: Pin Assignment (Top View)

NOTE

1. Please keep all RESERVED and unused pins disconnected.
2. All GND pins should be connected to ground.

3.3. Pin Description

Table 3: I/O Parameters Definition

Type	Description
AIO	Analog input/output
DI	Digital input
DIO	Digital input/output
DO	Digital output
PI	Power input

Table 4: Pin Description

Power Supply					
Pin Name	**Pin No.**	**I/O**	**Description**	**DC Characteristics**	**Comment**
VDD_3V3	21	PI	Main power supply for the module	Vmax = 3.46 V Vmin = 3.14 V Vnom = 3.3 V	It must be provided with sufficient current up to 0.6 A.
VIO	11	PI	Power supply for the module's I/O pins	Vmax = 1.89 V Vmin = 1.71 V Vnom = 1.8 V	The power must supply over 10 mA current. It can be powered by VDD_EXT of AG35 module.
GND	1, 12, 20, 28, 29, 31, 36, 38–40, 43–45, 48–52				
Wi-Fi Application Interface					
Pin Name	**Pin No.**	**I/O**	**Description**	**DC Characteristics**	**Comment**

WLAN_EN	9	DI	Wi-Fi enable control	V_{IL}min = -0.3 V V_{IL}max = 0.54 V V_{IH}min = 1.26 V V_{IH}max = 2.0 V	1.8 V power domain. Active high.
SDIO_D3	22	DIO	SDIO data bit 3	V_{OL}max = 0.18 V V_{OH}min = 1.62 V V_{IL}min = -0.3 V V_{IL}max = 0.54 V V_{IH}min = 1.26 V V_{IH}max = 2.0 V	1.8 V power domain
SDIO_D2	23	DIO	SDIO data bit 2	V_{OL}max = 0.18 V V_{OH}min = 1.62 V V_{IL}min = -0.3 V V_{IL}max = 0.54 V V_{IH}min = 1.26 V V_{IH}max = 2.0 V	1.8 V power domain. It is pulled up to 1.8 V internally.
SDIO_D1	24	DIO	SDIO data bit 1	V_{OL}max = 0.18 V V_{OH}min = 1.62 V V_{IL}min = -0.3 V V_{IL}max = 0.54 V V_{IH}min = 1.26 V V_{IH}max = 2.0 V	1.8 V power domain
SDIO_D0	25	DIO	SDIO data bit 0	V_{OL}max = 0.18 V V_{OH}min = 1.62 V V_{IL}min = -0.3 V V_{IL}max = 0.54 V V_{IH}min = 1.26 V V_{IH}max = 2.0 V	
SDIO_CLK	26	DI	SDIO clock	V_{IL}min = -0.3 V V_{IL}max = 0.54 V V_{IH}min = 1.26 V V_{IH}max = 2.0 V	
SDIO_CMD	27	DIO	SDIO command	V_{OL}max = 0.18 V V_{OH}min = 1.62 V V_{IL}min = -0.3 V V_{IL}max = 0.54 V V_{IH}min = 1.26 V V_{IH}max = 2.0 V	
Bluetooth Application Interface					
Pin Name	**Pin No.**	**I/O**	**Description**	**DC Characteristics**	**Comment**
BT_EN	10	DI	Bluetooth enable control	V_{IL}min = -0.3 V V_{IL}max = 0.54 V	1.8 V power domain. Active high.

				V_{IH}min = 1.26 V V_{IH}max = 2.0 V	
PCM_IN	13	DI	PCM data input	V_{IL}min = -0.3 V V_{IL}max = 0.54 V V_{IH}min = 1.26 V V_{IH}max = 2.0 V	1.8 V power domain. If unused, keep these pins open.
PCM_SYNC	14	DI	PCM data frame synchronization signal	V_{IL}min = -0.3 V V_{IL}max = 0.54 V V_{IH}min = 1.26 V V_{IH}max = 2.0 V	
PCM_CLK	15	DI	PCM clock signal	V_{IL}min = -0.3 V V_{IL}max = 0.54 V V_{IH}min = 1.26 V V_{IH}max = 2.0 V	
PCM_OUT	16	DO	PCM data output	V_{OL}max = 0.18 V V_{OH}min = 1.62 V	
BT_UART_RTS	7	DO	Bluetooth UART request to send	V_{OL}max = 0.18 V V_{OH}min = 1.62 V	
BT_UART_CTS	8	DI	Bluetooth UART clear to send	V_{IL}min = -0.3 V V_{IL}max = 0.54 V V_{IH}min = 1.26 V V_{IH}max = 2.0 V	
BT_UART_TXD	17	DO	Bluetooth UART transmit	V_{OL}max = 0.18 V V_{OH}min = 1.62 V	
BT_UART_RXD	18	DI	Bluetooth UART receive	V_{IL}min = -0.3 V V_{IL}max = 0.54 V V_{IH}min = 1.26 V V_{IH}max = 2.0 V	
HOST_WAKE_BT	42	DI	Host wake up Bluetooth	V_{IL}min = -0.3 V V_{IL}max = 0.54 V V_{IH}min = 1.26 V V_{IH}max = 2.0 V	1.8 V power domain. Pull-up at bootup is prohibited. Pull down to the ground if unused.
BT_WAKE_HOST	46	DO	Bluetooth wake up host	V_{OL}max = 0.18 V V_{OH}min = 1.62 V	
Coexistence UART					
Pin Name	**Pin No.**	**I/O**	**Description**	**DC Characteristics**	**Comment**
LTE_UART_TXD	5	DO	LTE/Wi-Fi & Bluetooth coexistence signal - transmit data	V_{OL}max = 0.18 V V_{OH}min = 1.62 V	1.8 V power domain. If unused, keep these pins open. QCOM private protocol, and these pins cannot be used
LTE_UART_	6	DI	LTE/Wi-Fi &	V_{IL}min = -0.3 V	

RXD			Bluetooth coexistence signal - receive data	V_{IL}max = 0.54 V V_{IH}min = 1.26 V V_{IH}max = 2.0 V	on third-party platforms.
RF Antenna Interface					
Pin Name	**Pin No.**	**I/O**	**Description**	**DC Characteristics**	**Comment**
RF_ANT	30	AIO	Wi-Fi and Bluetooth antenna		50 Ω impedance
32KHZ_IN					
Pin Name	**Pin No.**	**I/O**	**Description**	**DC Characteristics**	**Comment**
32KHZ_IN	19	DI	Used as a timer in low power modes. External 32.768 kHz clock input is required in sleep mode.	V_{IL}min = -0.3 V V_{IL}max = 0.54 V V_{IH}min = 1.26 V V_{IH}max = 2.0 V	1.8 V power domain. If unused, keep this pin open.
RESERVED Pins					
Pin Name	**Pin No.**				**Comment**
RESERVED	2, 3, 4, 32–35, 37, 41, 47				Keep these pins open.

3.4. Power Supply

The following table shows the power supply pins and the ground pins of AF20 module. The VIO can be powered by VDD_EXT of AG35 module.

Table 5: Power Supply Pins and GND Pins

Pin Name	Pin No.	IO	Description	Min.	Typ.	Max.	Unit
VDD_3V3	21	PI	Main power supply for the module	3.14	3.3	3.46	V
VIO	11	PI	Power supply for module's I/O pins	1.71	1.8	1.89	V
GND	1, 12, 20, 28, 29, 31, 36, 38–40, 43–45, 48–52						

AF20 module is powered by VDD_3V3, and it is recommended to use a power supply chip with maximum output current exceeding 0.6 A.

The following figure shows a reference design for VDD_3V3 which is controlled by PM_ENABLE. And PM_ENABLE should be connected to the pin 5 (PM_ENABLE) of AG35 module. For more details, see ***document [2]***.

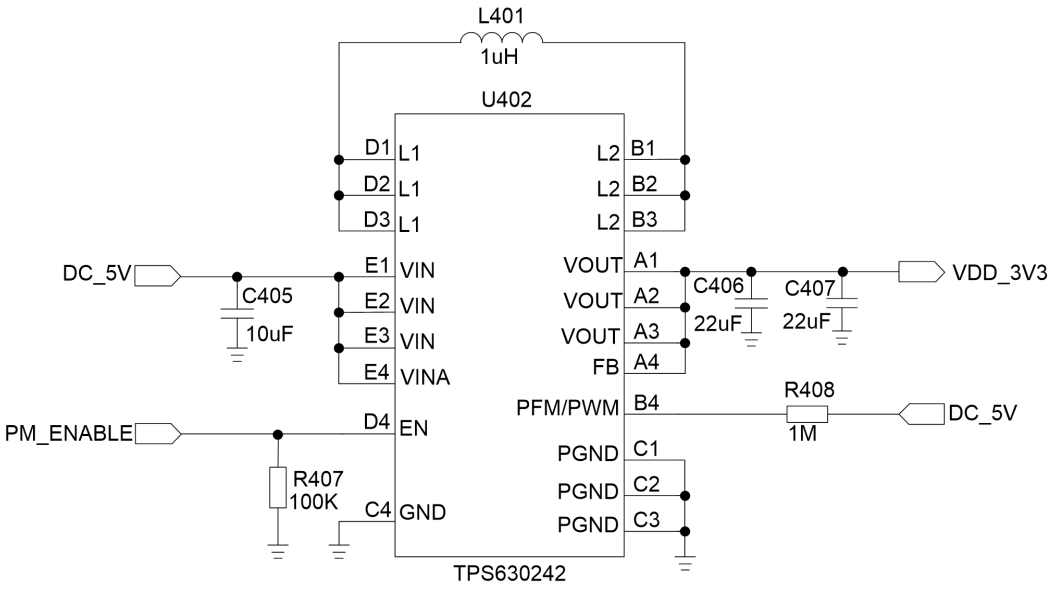

Figure 3: Reference Circuit for VDD_3V3

The following figure shows the recommended turn-on and turn-off timing of AF20.

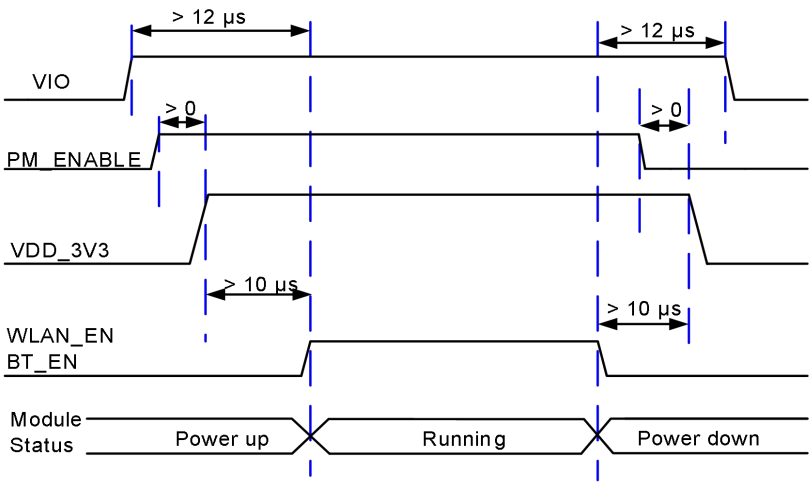

Figure 4: Turn-on and Turn-off Timing

NOTE

1. **AT+QWIFI=1** can be used to switch on the power supply (VDD_3V3) and enable Wi-Fi function.
2. **AT+QWIFI=0** can be used to disable Wi-Fi function.

3.5. Wi-Fi Application Interface

The following figure shows the Wi-Fi application interface connection between AF20 and AG35.

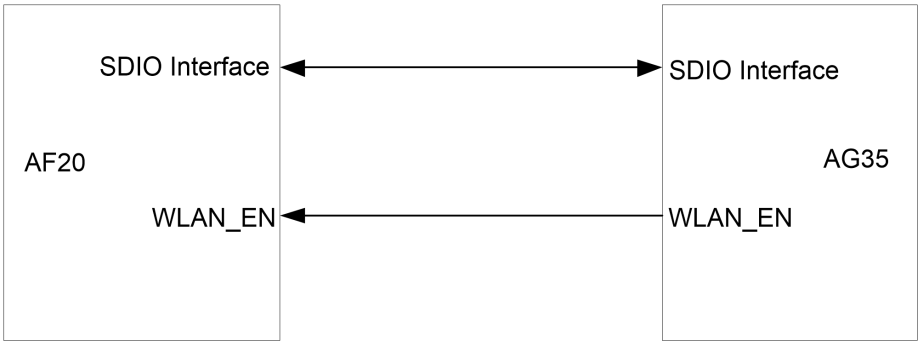

Figure 5: Wi-Fi Application Interface Connection

3.5.1. WLAN_EN

WLAN_EN is used to control the Wi-Fi function of AF20. Wi-Fi function will be enabled when WLAN_EN is at high level.

Table 6: Pin Definition of WLAN_EN

Pin Name	Pin No.	I/O	Description	Comment
WLAN_EN	9	DI	WLAN enable control	1.8 V power domain. Active high.

NOTE

WLAN_EN is a sensitive signal, and thus should be ground shielded and routed as close as possible to AF20 module.

3.5.2. SDIO Interface

The following table shows the pin definition of the SDIO interface of AF20.

Table 7: Pin Definition of SDIO Interface

Pin Name	Pin No.	I/O	Description	Comment
SDIO_D3	22	DIO	SDIO data bit 3	1.8 V power domain
SDIO_D2	23	DIO	SDIO data bit 2	1.8 V power domain. It is pulled up to 1.8 V internally.
SDIO_D1	24	DIO	SDIO data bit 1	1.8 V power domain
SDIO_D0	25	DIO	SDIO data bit 0	
SDIO_CLK	26	DI	SDIO clock	
SDIO_CMD	27	DIO	SDIO command	

The following figure shows the SDIO interface connection between AF20 and AG35 module.

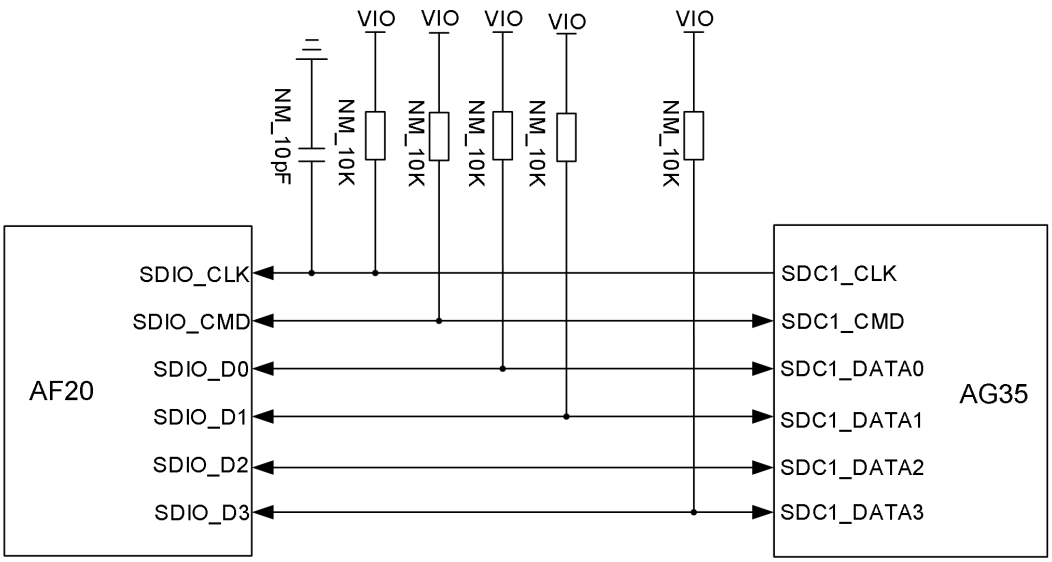

Figure 6: SDIO Interface Connection

SDIO signals are very high-speed signals. In order to ensure compliance with SDIO 3.0 specification, please comply with the following principles for SDIO interface design.

- Surround the SDIO traces with ground on that layer and with ground planes above and below. The impedance of SDIO signal trace is 50 Ω ±10 %.
- Keep SDIO signals far away from other sensitive circuits/signals such as RF circuits and analog signals, as well as noisy signals such as clock signals and DC-DC signals.
- Keep SDIO traces as parallel as possible in the same layer. Make sure SDIO traces are surrounded by ground vias and not crossed with each other.
- Keep SDIO traces as short as possible with equal length. It is recommended to keep the trace length difference between SDIO_CLK and SDIO_D[0:3]/SDIO_CMD less than 1 mm and the total routing length less than 50 mm. The total length of SDIO signal traces inside AG35 module is 12 mm and that inside AF20 is 10 mm, so the exterior total trace length should be less than 28 mm.
- On the SDIO_CLK signal trace, a 15 to 24 Ω terminal matching resistance should be placed near the AG35 module. The distance between the SDC1_CLK pin of the AG35 module and the matching resistance should be less than 5 mm.
- Make sure that the adjacent trace spacing is not less than twice the trace width and the bus capacitance is less than 15 pF.

3.6. Bluetooth Application Interface

The following figure shows the block diagram of Bluetooth application interface connection between AF20 and AG35 module.

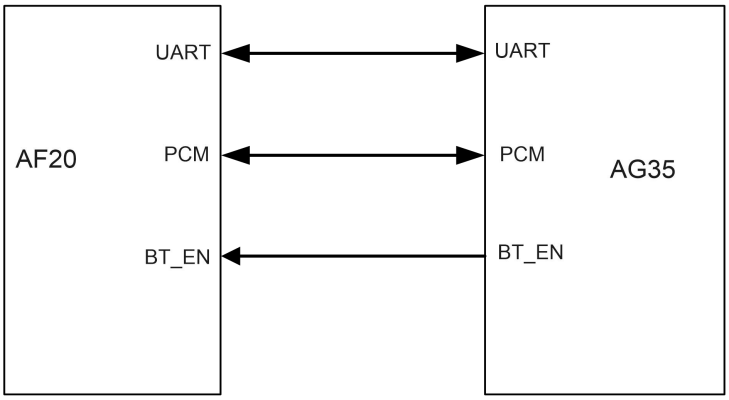

Figure 7: Block Diagram of Bluetooth Application Interface Connection

3.6.1. BT_EN

BT_EN is used to control the Bluetooth function of AF20 module. Bluetooth function will be enabled when BT_EN is at high level.

Table 8: Pin Definition of BT_EN

Pin Name	Pin No.	I/O	Description	Comment
BT_EN	10	DI	Bluetooth enable control	1.8 V power domain. Active high.

3.6.2. PCM Interface

Table 9: Pin Definition of PCM Interface

Pin Name	Pin No.	I/O	Description	Comment
PCM_IN	13	DI	PCM data input	1.8 V power domain
PCM_SYNC	14	DI	PCM data frame synchronization signal	
PCM_CLK	15	DI	PCM clock signal	
PCM_OUT	16	DO	PCM data output	

The following figure shows the reference design for PCM interface.

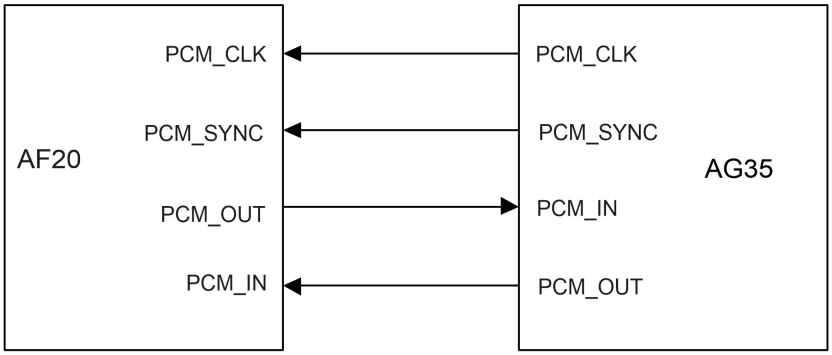

Figure 8: Reference Design for PCM Interface

3.6.3. Bluetooth UART

The following table shows the pin definition of Bluetooth UART.

Table 10: Pin Definition of Bluetooth UART Interface

Pin Name	Pin No.	I/O	Description	Comment
BT_UART_RTS	7	DO	Bluetooth UART request to send	1.8 V power domain
BT_UART_CTS	8	DI	Bluetooth UART clear to send	
BT_UART_TXD	17	DO	Bluetooth UART transmit	
BT_UART_RXD	18	DI	Bluetooth UART receive	

The following figure shows the reference design for Bluetooth UART connection between AF20 and AG35.

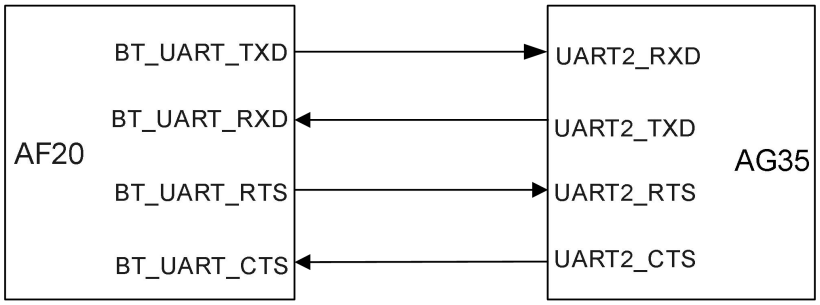

Figure 9: Reference Design for Bluetooth UART Connection

3.7. Coexistence UART

The following table shows the pin definition of AF20's coexistence UART.

Table 11: Pin Definition of Coexistence UART

Pin Name	Pin No.	I/O	Description	Comment
LTE_UART_TXD	5	DO	LTE/Wi-Fi & Bluetooth coexistence signal	1.8 V power domain QCOM private protocol, and these pins cannot be used on third-party platforms.
LTE_UART_RXD	6	DI	LTE/Wi-Fi & Bluetooth coexistence signal	

AF20 module supports LTE/Wi-Fi coexistence and LTE/Bluetooth coexistence. The following figure shows the coexistence interface connection between AF20 and AG35.

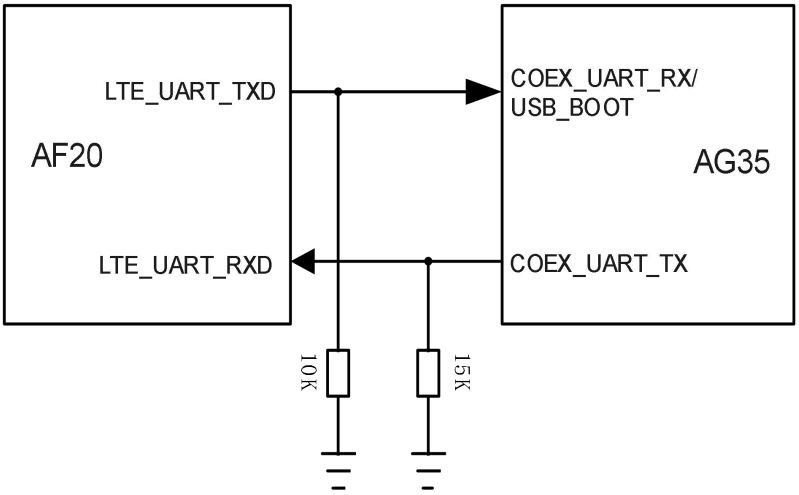

Figure 10: Coexistence UART Connection

3.8. 32KHZ_IN

The 32 kHz clock is used in low power modes such as IEEE power saving mode and sleep mode. It serves as a timer to determine when to wake up AF20 module to receive signals in various power saving schemes, and to maintain basic logic operations when in sleep mode.

Table 12: Pin Definition of 32KHZ_IN

Pin Name	Pin No.	I/O	Description	Comment
32KHZ_IN	19	DI	Used as a timer in low power modes. External 32.768 kHz clock input is required in sleep mode.	1.8 V power domain. If unused, keep this pin open.

3.9. RF Antenna Interface

3.9.1. Pin Definition of the RF Antenna Interface

Table 13: Pin Definition of the RF Antenna Interface

Pin Name	Pin No.	I/O	Description	Comment
RF_ANT	30	AIO	Wi-Fi/Bluetooth antenna interface	50 Ω impedance

3.9.2. Operating Frequency

Table 14: Operating Frequency of the Module

Feature	Frequency	Unit
2.4 GHz Wi-Fi	2.412–2.472	GHz
5 GHz Wi-Fi	5.180–5.825	GHz
Bluetooth	2.402–2.480	GHz

3.9.3. Reference Design

AF20 module provides an RF antenna interface for antenna connection. A reference circuit design for RF antenna interface is shown below. It is recommended to reserve a π-type matching circuit for better RF performance, and the π-type matching components (C1, C2, R1) should be placed as close to the antenna as possible. The capacitors are not mounted by default.

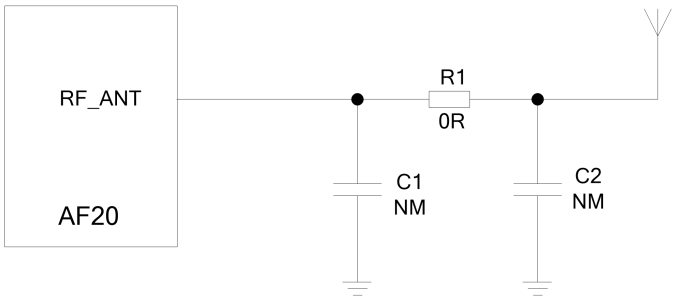

Figure 11: Reference Circuit for RF Antenna Interface

Another type of reference circuit for the RF antenna interface is shown below. It is designed for vehicle applications. It is recommended to reserve two notch filter circuits and a π-type matching circuit for better RF performance. C2/L1 and L2/C3 comprise two notch filter circuits for filtering out interference caused by a particular frequency. When L2/C2/L1/C3 are not mounted, C1/R1/C4 comprise a π-type matching circuit. Capacitors (C1/C2/C3/C4) and inductors (L1/L2) are not mounted by default, and R1 is only mounted with 0 Ω resistor.

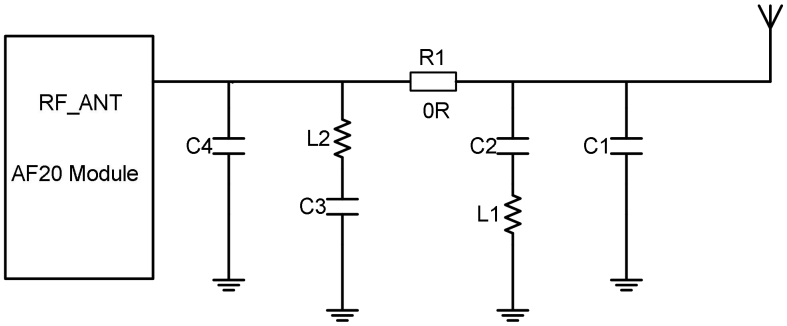

Figure 12: Reference Design of RF Antenna Interface (Vehicle Applications)

3.9.4. RF Routing Guidelines

For user's PCB, the characteristic impedance of all RF traces should be controlled to 50 Ω. The impedance of the RF traces is usually determined by the trace width (W), the materials' dielectric constant, the height from the reference ground to the signal layer (H), and the spacing between RF traces and grounds (S). Microstrip or coplanar waveguide is typically used in RF layout to control characteristic impedance. The following are reference designs of microstrip or coplanar waveguide with different PCB structures.

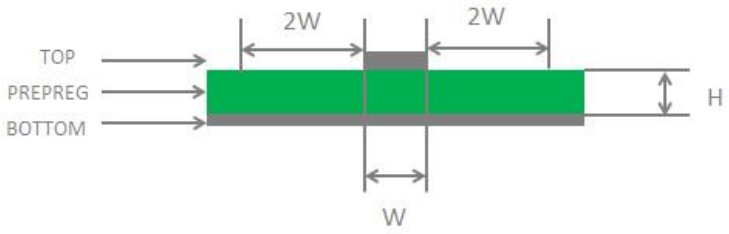

Figure 13: Microstrip Design on a 2-layer PCB

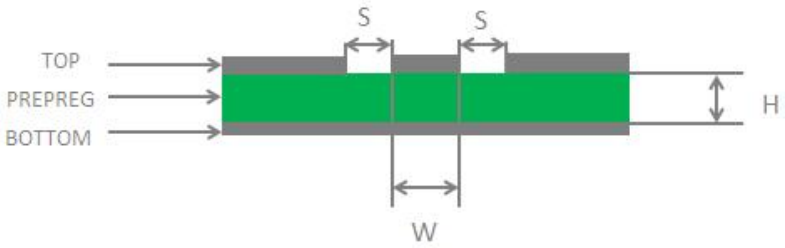

Figure 14: Coplanar Waveguide Design on a 2-layer PCB

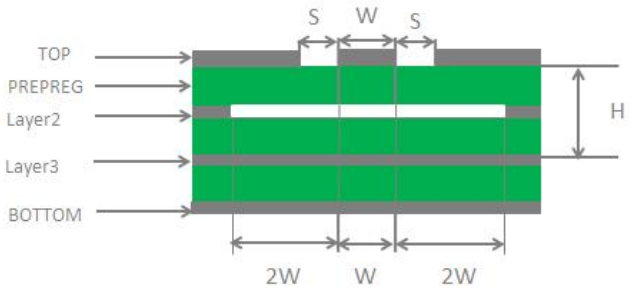

Figure 15: Coplanar Waveguide Design on a 4-layer PCB (Layer 3 as Reference Ground)

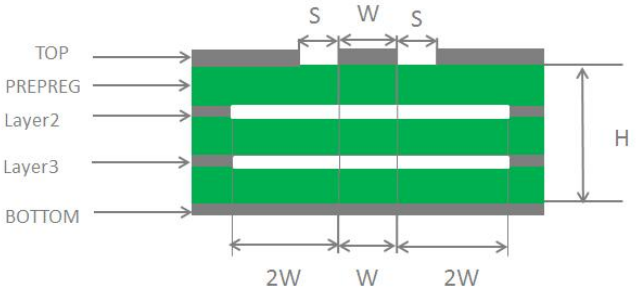

Figure 16: Coplanar Waveguide Design on a 4-layer PCB (Layer 4 as Reference Ground)

To ensure better RF performance and reliability, the following conditions should be complied with in RF layout design:

- Use an impedance simulation tool to accurately control the characteristic impedance of RF traces to 50 Ω.
- GND pins adjacent to RF pins should not be designed as thermal relief pads, and should be fully connected to ground.
- Clearance between RF pins and RF connector should be as short as possible, and all right-angle (90°) traces should be changed to the ones with the angle of 135°.
- There should be clearance under the signal pin of the antenna connector or solder joint.
- The reference ground of RF traces should be complete. Meanwhile, ground vias around RF traces and the reference ground can improve RF performance. The clearance between ground vias and RF traces should be at least twice the width of RF signal traces (2 × W).
- Keep RF traces away from interference sources, and avoid intersection and paralleling between any traces on adjacent layers.

For more details about RF layout, see ***document [3]***.

3.9.5. Requirements for Antenna Design

Table 15: Antenna Requirements

Type	Requirements
Frequency Range	2.412 GHz–2.472GHz (cable Insertion Loss: < 1 dB) 5.180 GHz–5.825GHz (cable Insertion Loss: < 1 dB)
VSWR	≤ 2
Gain (dBi)	1 (typ.)
Max Input Power (W)	50
Input Impedance (Ω)	50
Polarization Type	Vertical

3.9.6. RF Connector Recommendation

If RF connector is used for antenna connection, it is recommended to use the U.FL-R-SMT connector provided by Hirose.

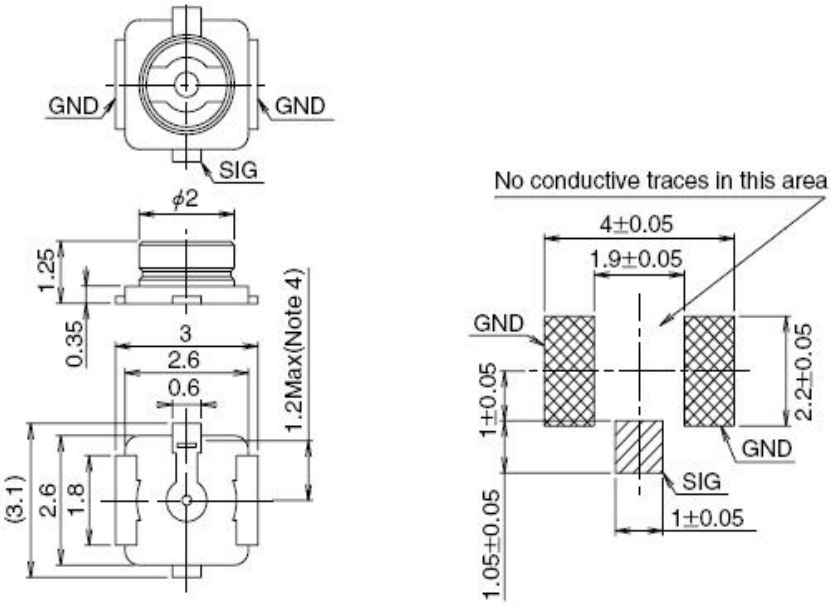

Figure 17: Dimensions of the Receptacle (Unit: mm)

U.FL-LP series mated plugs listed in the following figure can be used to match the U.FL-R-SMT connector.

	U.FL-LP-040	U.FL-LP-066	U.FL-LP(V)-040	U.FL-LP-062	U.FL-LP-088
Part No.	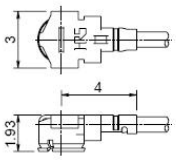	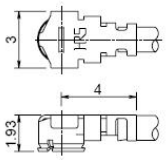	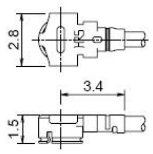	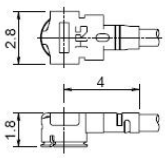	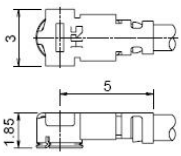
Mated Height	2.5mm Max. (2.4mm Nom.)	2.5mm Max. (2.4mm Nom.)	2.0mm Max. (1.9mm Nom.)	2.4mm Max. (2.3mm Nom.)	2.4mm Max. (2.3mm Nom.)
Applicable cable	Dia. 0.81mm Coaxial cable	Dia. 1.13mm and Dia. 1.32mm Coaxial cable	Dia. 0.81mm Coaxial cable	Dia. 1mm Coaxial cable	Dia. 1.37mm Coaxial cable
Weight (mg)	53.7	59.1	34.8	45.5	71.7
RoHS	YES				

Figure 18: Specifications of Mated Plugs (Unit: mm)

The following figure describes the space factor of the mated connectors.

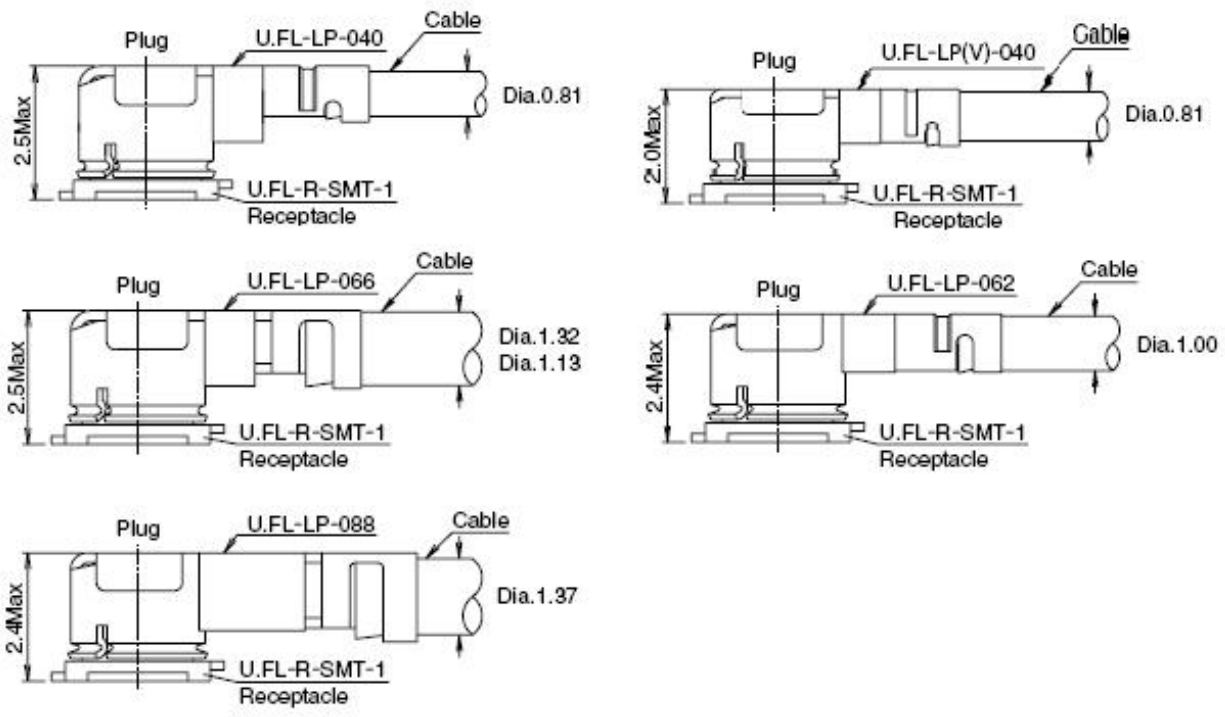

Figure 19: Space Factor of the Mated Connectors (Unit: mm)

For more details, visit http://www.hirose.com.

4 Electrical Characteristics & Reliability

4.1. Absolute Maximum Ratings

Table 16: Absolute Maximum Ratings

Parameter	Min.	Max.	Unit
VDD_3V3	-0.3	3.46	V
VIO	-0.3	1.89	V
Voltage at digital pins	-0.3	VIO + 0.2	V

Table 17: Recommended Operating Conditions

Parameter	Min.	Typ.	Max.	Unit
VDD_3V3	3.14	3.3	3.46	V
VIO	1.71	1.8	1.89	V

4.2. Digital I/O Characteristics

Table 18: Digital I/O Characteristics

Symbol	Parameter	Min.	Max.	Unit
V_{IH}	High Level Input Voltage	0.7 × VIO	VIO + 0.2	V
V_{IL}	Low Level Input Voltage	-0.3	0.3 × VIO	V
V_{OH}	High Level Output Voltage	0.9 × VIO	VIO	V

V_{OL}	Low Level Output Voltage	0	0.1 × VIO	V

4.3. Power Consumption

Table 19: Wi-Fi Power Consumption of the Module (1.8 V and 3.3 V Power Supply)

Description	Conditions	I_{WLAN_3V3} (Typ.)	I_{VIO} (Typ.)	Unit
OFF State [3]	**AT+QWIFI=0**	TBD	TBD	μA
Idle [4]	**AT+QWIFI=1**	TBD	TBD	mA
802.11b	Tx 1 Mbps @ 17.3 dBm	366.4	5.9	mA
	Tx 11 Mbps @ 17.3 dBm	338.6	5.9	mA
802.11g	Tx 6 Mbps @ 15.9 dBm	321.5	5.9	mA
	Tx 54 Mbps @ 15.3 dBm	234.8	5.9	mA
802.11n (2.4 GHz)	Tx HT20-MCS 0 @ 15.7 dBm	315.4	5.9	mA
	Tx HT20-MCS 7 @ 13.5 dBm	222.0	5.9	mA
	Tx HT40-MCS 0 @ 15.2 dBm	274.5	5.9	mA
	Tx HT40-MCS 7 @ 12.2 dBm	159.9	5.9	mA
802.11a	Tx 6 Mbps @ 11.6 dBm	364.7	5.9	mA
	Tx 54 Mbps @ 10.9 dBm	274.4	5.9	mA
802.11n (5GHz)	Tx HT20 MCS 0 @ 11.3 dBm	364.3	5.9	mA
	Tx HT20 MCS 8 @ 9.0 dBm	263.5	5.9	mA
	Tx HT40 MCS 0 @ 12.5 dBm	354.6	5.9	mA
	Tx HT40 MCS 9 @ 8.1 dBm	222.9	5.9	mA
802.11ac	Tx VHT20 MCS 0 @ 11.3 dBm	360.0	5.9	mA
	Tx VHT20 MCS 8 @ 9 dBm	253.0	5.9	mA
	Tx VHT40 MCS 0 @ 12.5 dBm	355.7	5.9	mA

[3] Disabled Wi-Fi function through **AT+QWIFI=0** or other method.
[4] Wi-Fi function can be enabled via **AT+QWIFI=1** or other method, but no device can be connected to the AP.

	Tx VHT40 MCS 9 @ 8.1 dBm	214.2	5.9	mA
	Tx VHT80 MCS 0 @ 10.7 dBm	329.1	5.9	mA
	Tx VHT80 MCS 9 @ 7.1 dBm	192.1	5.9	mA

4.4. RF Performances

Table 20: Conducted RF Output Power at 2.4 GHz

Frequency	Min.	Typ.	Unit
802.11b @ 1 Mbps	13.5	16	dBm
802.11b @ 11 Mbps	13.5	16	dBm
802.11g @ 6 Mbps	12.5	15	dBm
802.11g @ 54 Mbps	11.5	14	dBm
802.11n, HT20 @ MCS 0	12.5	15	dBm
802.11n, HT20 @ MCS 7	10.5	13	dBm
802.11n, HT40 @ MCS 0	12.5	15	dBm
802.11n, HT40 @ MCS 7	10.5	13	dBm

Table 21: Conducted RF Output Power at 5 GHz

Frequency	Min.	Typ.	Unit
802.11a @ 6 Mbps	9.5	12	dBm
802.11a @ 54 Mbps	8.5	11	dBm
802.11n, HT20 @ MCS 0	9.5	12	dBm
802.11n, HT20 @ MCS 7	6.5	9	dBm
802.11n, HT40 @ MCS 0	10	12.5	dBm
802.11n, HT40 @ MCS 7	5.5	8	dBm
802.11ac, VHT20 @ MCS 0	9.5	12	dBm

802.11ac, VHT20 @ MCS 8	6.5	9	dBm
802.11ac, VHT40 @ MCS 0	10	12.5	dBm
802.11ac, VHT40 @ MCS 9	5.5	8	dBm
802.11ac, VHT80 @ MCS 0	8.5	11	dBm
802.11ac, VHT80 @ MCS 9	4.5	7	dBm

Table 22: Conducted RF Receiving Sensitivity at 2.4 GHz

Frequency	Receiving Sensitivity (Typ.)
802.11b, 1 Mbps	-95.0 dBm
802.11b, 11 Mbps	-88.0 dBm
802.11g, 6 Mbps	-90.0 dBm
802.11g, 54 Mbps	-73.5 dBm
802.11n, HT20, MCS 0	-89.5 dBm
802.11n, HT20, MCS 7	-70.5 dBm
802.11n, HT40, MCS 0	-87.5 dBm
802.11n, HT40, MCS 7	-68.5 dBm

Table 23: Conducted RF Receiving Sensitivity at 5 GHz

Frequency	Receiving Sensitivity (Typ.)
802.11a, 6 Mbps	-91.5 dBm
802.11a, 54 Mbps	-75.0 dBm
802.11n, HT20, MCS 0	-91.0 dBm
802.11n, HT20, MCS 7	-71.5 dBm
802.11n, HT40, MCS 0	-88.0 dBm
802.11n, HT40, MCS 7	-68.5 dBm

802.11ac, VHT20, MCS 0	-91.0 dBm
802.11ac, VHT20, MCS 8	-67.5 dBm
802.11ac, VHT40, MCS 0	-88.0 dBm
802.11ac, VHT40, MCS 9	-62.5 dBm
802.11ac, VHT80, MCS 0	-84.5 dBm
802.11ac, VHT80, MCS 9	-59 dBm

4.5. ESD Protection

Static electricity occurs naturally and it may damage the module. Therefore, applying proper ESD countermeasures and handling methods is imperative. For example, wear anti-static gloves during the development, production, assembly and testing of the module; add ESD protection components to the ESD sensitive interfaces and points in the product design.

Table 24: ESD Characteristics (Temperature: 25 °C, Humidity: 45 %; Unit: kV)

Test Points	Contact Discharge	Air Discharge
VDD_3V3	±8	±12
GND	±8	±12
All antenna interfaces	±8	±12
Other interfaces	±0.5	±1

5 Mechanical Information

This chapter describes the mechanical dimensions of the module. All dimensions are measured in millimeter (mm), All dimensions are measured in millimeter (mm), and the dimensional tolerances are ±0.2 mm unless otherwise specified.

5.1. Mechanical Dimensions

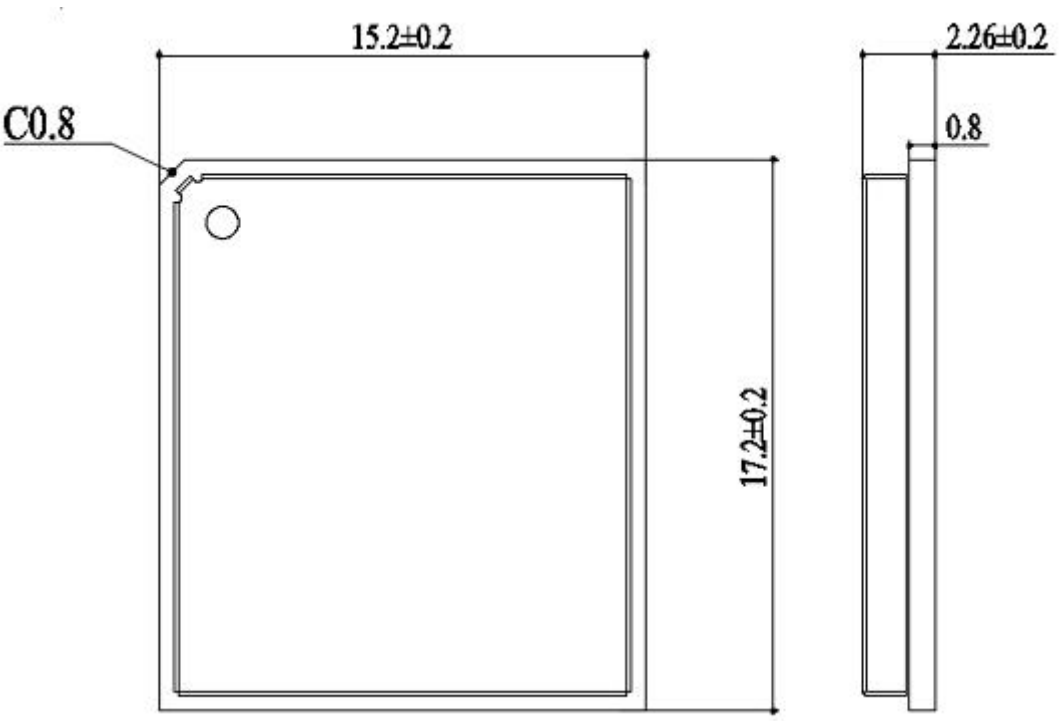

Figure 20: Top and Side Dimensions

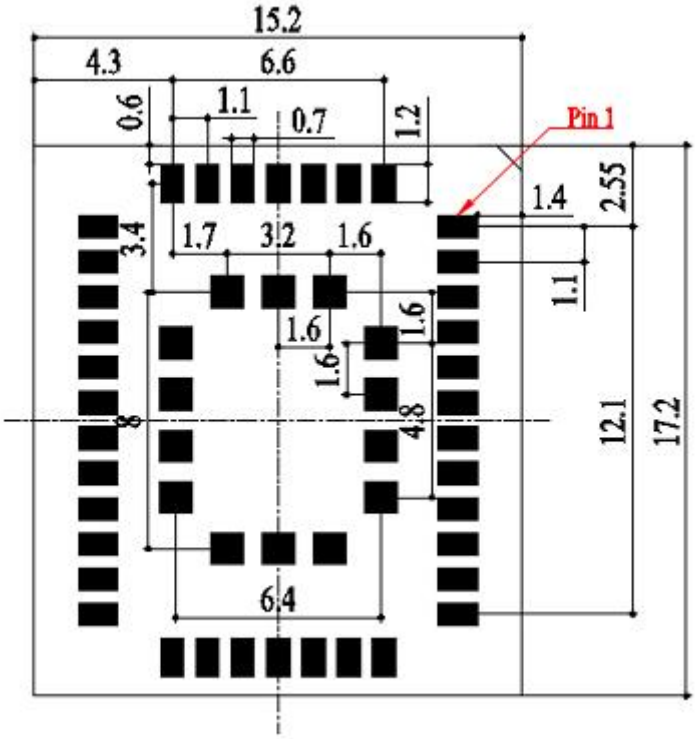

Figure 21: Bottom Dimensions (Bottom View)

NOTE

The package warpage level of the module conforms to *JEITA ED-7306* standard.

5.2. Recommended Footprint

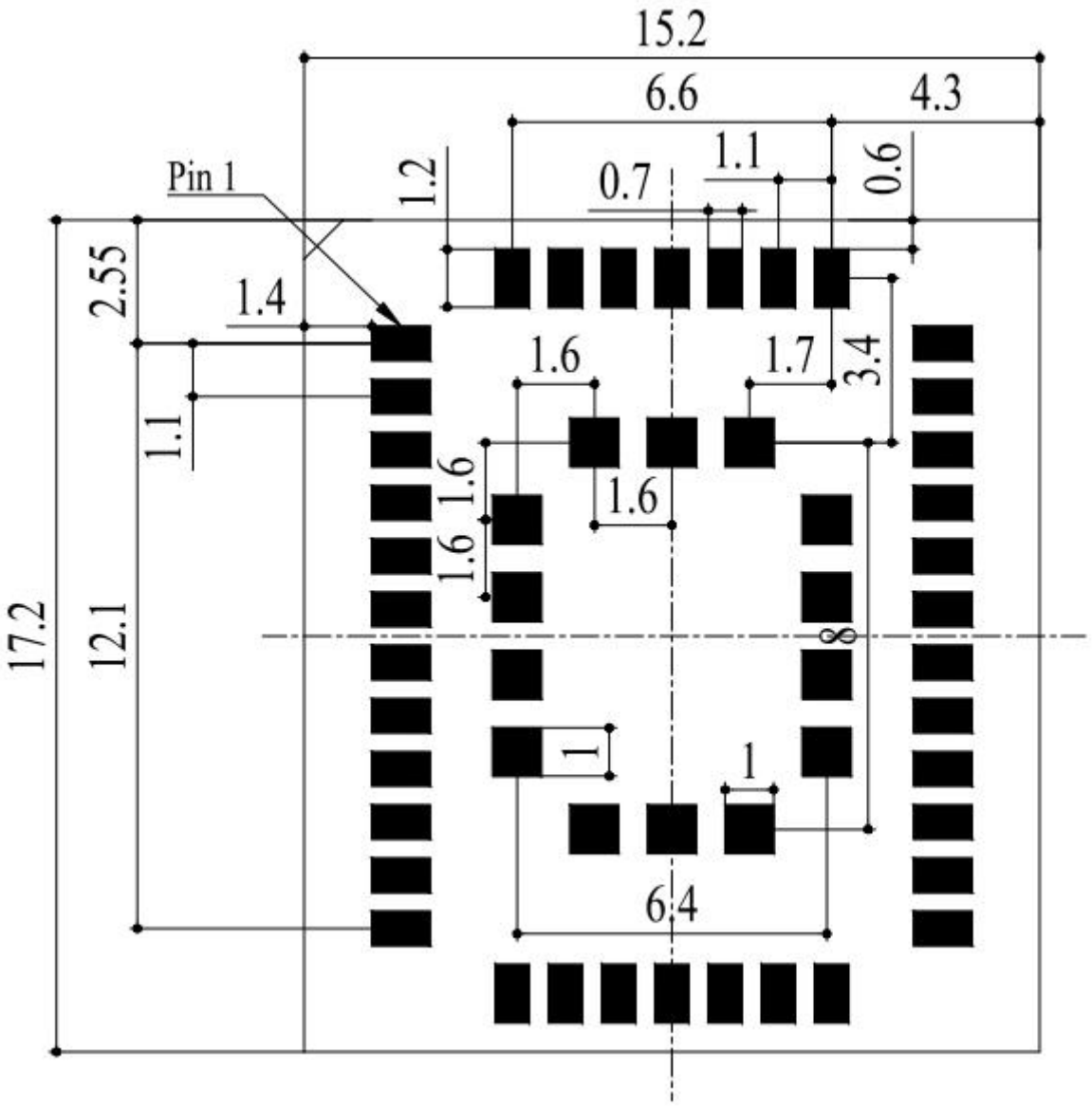

Figure 22: Recommended Footprint

NOTE

Keep at least 3 mm between the module and other components on the motherboard to improve soldering quality and maintenance convenience.

5.3. Top and Bottom Views

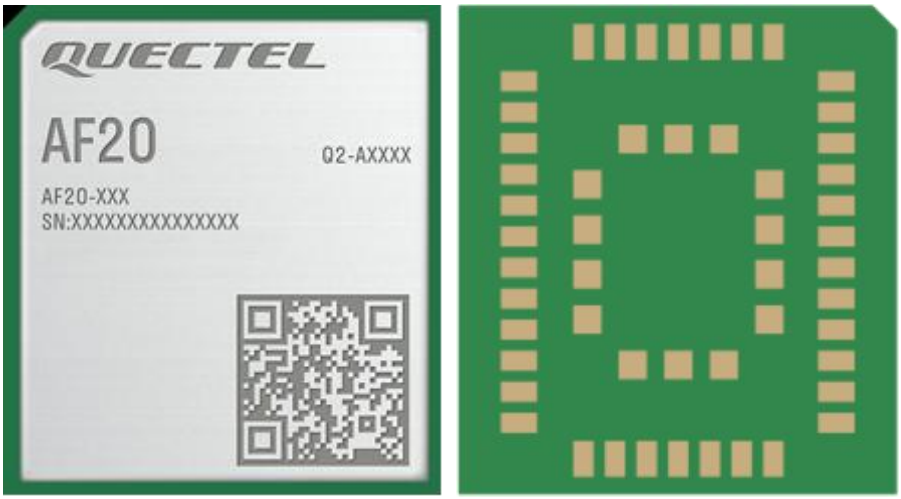

Figure 23: Top and Bottom Views of the Module

NOTE

Images above are for illustration purpose only and may differ from the actual module. For authentic appearance and label, please refer to the module received from Quectel.

6 Storage, Manufacturing and Packaging

6.1. Storage Conditions

The module is provided with vacuum-sealed packaging. MSL of the module is rated as 3. The storage requirements are shown below.

1. Recommended Storage Condition: the temperature should be 23 ±5 °C and the relative humidity should be 35–60 %.

2. Shelf life (in a vacuum-sealed packaging): 12 months in Recommended Storage Condition.

3. Floor life: 168 hours [5] in a factory where the temperature is 23 ±5 °C and relative humidity is below 60 %. After the vacuum-sealed packaging is removed, the module must be processed in reflow soldering or other high-temperature operations within 168 hours. Otherwise, the module should be stored in an environment where the relative humidity is less than 10 % (e.g., a dry cabinet).

4. The module should be pre-baked to avoid blistering, cracks and inner-layer separation in PCB under the following circumstances:

   - The module is not stored in Recommended Storage Condition;
   - Violation of the third requirement mentioned above;
   - Vacuum-sealed packaging is broken, or the packaging has been removed for over 24 hours;
   - Before module repairing.

5. If needed, the pre-baking should follow the requirements below:

   - The module should be baked for 8 hours at 120 ±5 °C;
   - The module must be soldered to PCB within 24 hours after the baking, otherwise it should be put in a dry environment such as in a dry cabinet.

[5] This floor life is only applicable when the environment conforms to *IPC/JEDEC J-STD-033*. It is recommended to start the solder reflow process within 24 hours after the package is removed if the temperature and moisture do not conform to, or are not sure to conform to *IPC/JEDEC J-STD-033*. And do not remove the packages of tremendous modules if they are not ready for soldering.

NOTE

1. To avoid blistering, layer separation and other soldering issues, extended exposure of the module to the air is forbidden.
2. Take out the module from the package and put it on high-temperature-resistant fixtures before baking. If shorter baking time is desired, see *IPC/JEDEC J-STD-033* for the baking procedure.
3. Pay attention to ESD protection, such as wearing anti-static gloves, when touching the modules.

6.2. Manufacturing and Soldering

Push the squeegee to apply the solder paste on the surface of stencil, thus making the paste fill the stencil openings and then penetrate to the PCB. Apply proper force on the squeegee to produce a clean stencil surface on a single pass. To guarantee module soldering quality, the thickness of stencil for the module is recommended to be 0.13–0.15 mm. For more details, see ***document [4]***.

The recommended peak reflow temperature shall be 235–246 ºC, with 246 ºC as the absolute maximum reflow temperature. To avoid damage to the module caused by repeated heating, it isrecommended that the module shall be mounted only after reflow soldering for the other side of PCB has been completed. The recommended reflow soldering thermal profile (lead-free reflow soldering) and related parameters are shown below.

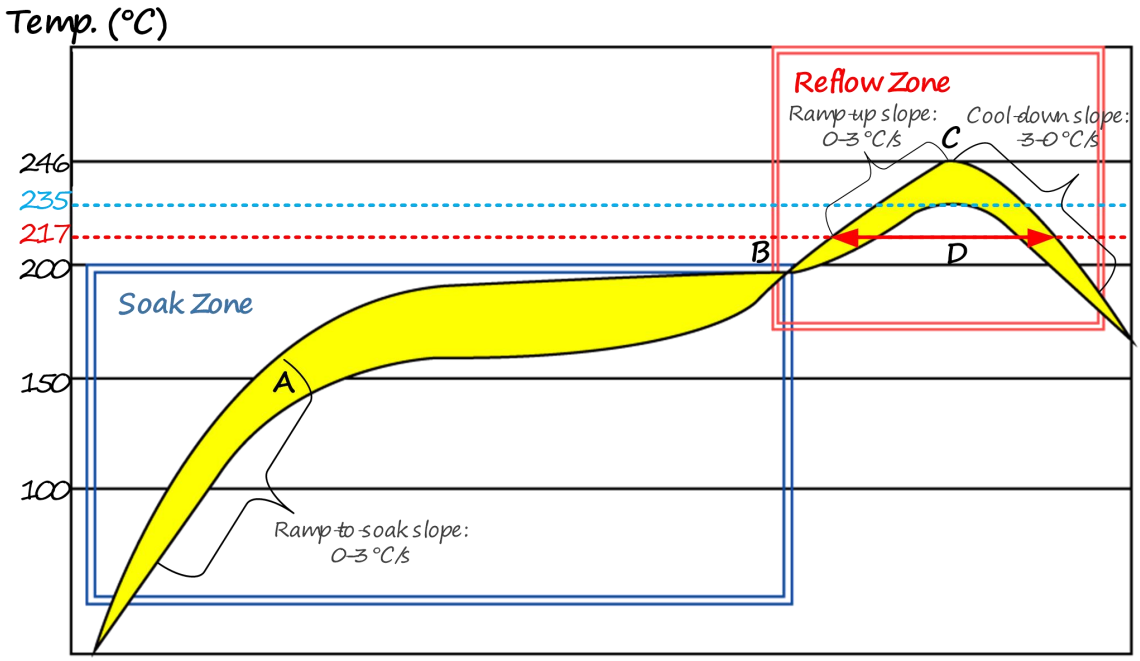

Figure 24: Recommended Reflow Soldering Thermal Profile

Table 25: Recommended Thermal Profile Parameters

Factor	Recommendation
Soak Zone	
Max. slope	0– °C/s
Soak time (between A and B: 150°C and 200°C)	70–120 s
Reflow Zone	
Max. slope	0–3 °C/s
Reflow time (D: over 217°C)	40–70 s
Max. temperature	235 °C–246 °C
Cooling down slope	-3–0 °C/s
Reflow Cycle	
Max. reflow cycle	1

NOTE

1. The above profile parameter requirements are for the measured temperature of the solder joints. Both the hottest and coldest spots of solder joints on the PCB should meet the above requirements.
2. During manufacturing and soldering, or any other processes that may contact the module directly, never wipe the module's shielding can with organic solvents, such as acetone, ethyl alcohol, isopropyl alcohol, trichloroethylene, etc. Otherwise, the shielding can may become rusted.
3. The shielding can for the module is made of Cupro-Nickel base material. It is tested that after 12 hours' Neutral Salt Spray test, the laser engraved label information on the shielding can is still clearly identifiable and the QR code is still readable, although white rust may be found.
4. If a conformal coating is necessary for the module, do not use any coating material that may chemically react with the PCB or shielding cover, and prevent the coating material from flowing into the module.
5. Avoid using ultrasonic technology for module cleaning since it can damage crystals inside the module.
6. Due to the complexity of the SMT process, contact Quectel Technical Supports in advance for any situation that you are not sure about, or any process (e.g. selective wave soldering, ultrasonic soldering) that is not mentioned in ***document [4]***.

6.3. Packaging Specification

This chapter describes only the key parameters and process of packaging. All figures below are for reference only. The appearance and structure of the packaging materials are subject to the actual delivery.

The module adopts carrier tape packaging and details are as follow:

6.3.1. Carrier Tape

Dimension details are as follow:

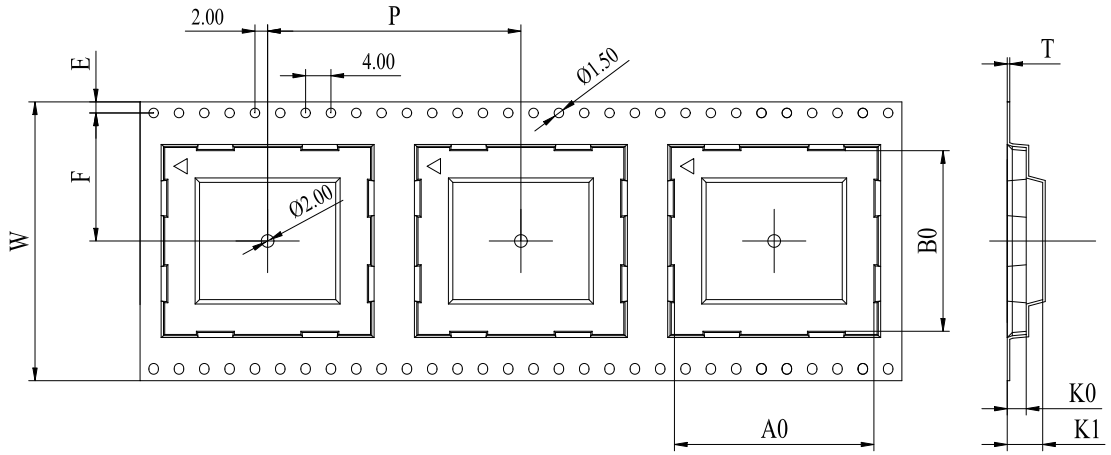

Figure 25: Carrier Tape Dimension Drawing

Table 26: Carrier Tape Dimension Table (Unit: mm)

W	P	T	A0	B0	K0	K1	F	E
32	24	0.4	15.7	17.65	2.7	7.8	14.2	1.75

6.3.2. Plastic Reel

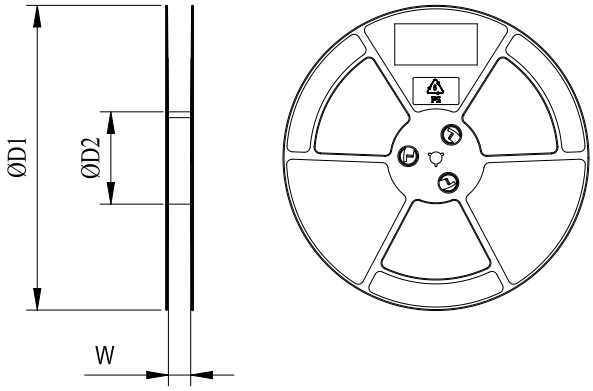

Figure 26: Plastic Reel Dimension Drawing

Table 27: Plastic Reel Dimension Table (Unit: mm)

øD1	øD2	W
330	100	32.5

6.3.3. Packaging Process

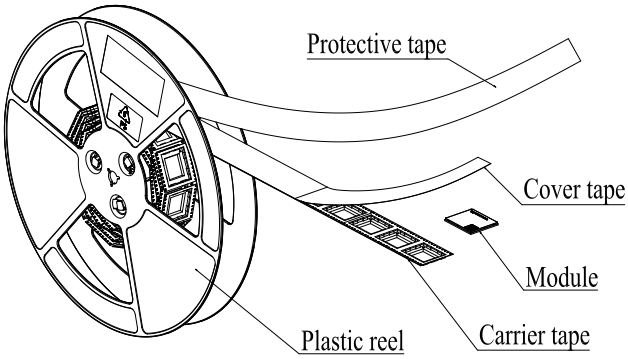

Place the module into the carrier tape and use the cover tape to cover it; then wind the heat-sealed carrier tape to the plastic reel and use the protective tape for protection. 1 plastic reel can load 250 modules.

Place the packaged plastic reel, humidity indicator card and desiccant bag into a vacuum bag, vacuumize it.

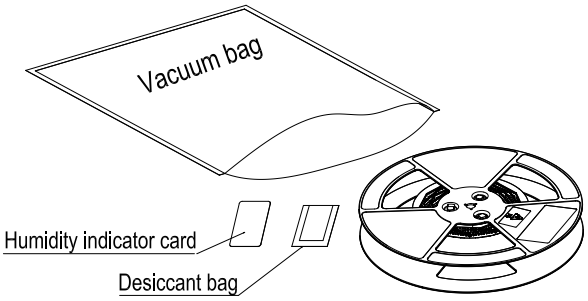

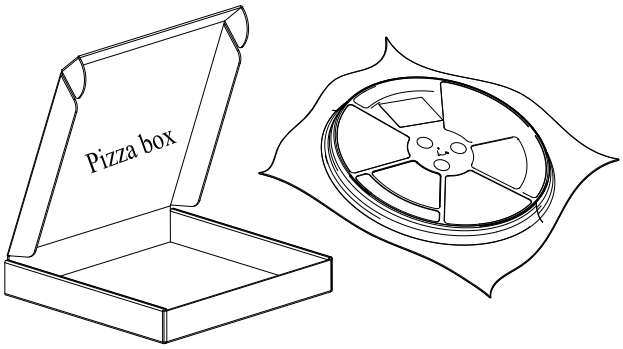

Place the vacuum-packed plastic reel into the pizza box.

Put 4 packaged pizza boxes into 1 carton and seal it. 1 carton can pack 1000 modules.

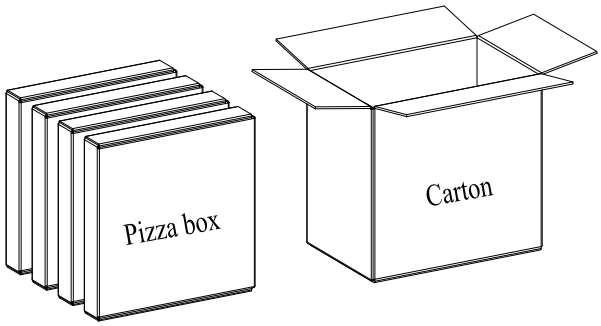

Figure 27: Packaging Process

7 Appendix References

Table 28: Related Documents

Document Name
[1] Quectel_UMTS&LTE_EVB_User_Guide
[2] Quectel_AG35_Quecopen_Reference_Design
[3] Quectel_RF_Layout_Application_Note
[4] Quectel_Module_Secondary_SMT_User_Guide

Table 29: Terms and Abbreviations

Abbreviation	Description
AP	Access Point
BPSK	Binary Phase Shift Keying
BT	Bluetooth
CCK	Complementary Code Keying
CTS	Clear To Send
DFS	Dynamic Frequency Selection
ESD	Electrostatic Discharge
GND	Ground
HT	High Throughput
IEEE	Institute of Electrical and Electronics Engineers
I_{IL}	Input Leakage Current
I/O	Input/Output

LTE	Long Term Evolution
Mbps	Million Bits Per Second
MCS	Modulation and Coding Scheme
MOQ	Minimum Order Quantity
PCB	Printed Circuit Board
PCM	Pulse Code Modulation
QAM	Quadrature Amplitude Modulation
QPSK	Quadrature Phase Shift Keying
RF	Radio Frequency
RH	Relative Humidity
RoHS	Restriction of Hazardous Substances
RTS	Request To Send
Rx	Receive Direction
SDIO	Secure Digital Input and Output Card
TBD	To Be Determined
Tx	Transmitting Direction
UART	Universal Asynchronous Receiver Transmitter
USB	Universal Serial Bus
VHT	Very High Throughput
V_{IH}max	Maximum Input High Level Voltage Value
V_{IH}min	Minimum Input High Level Voltage Value
V_{IL}max	Maximum Input Low Level Voltage Value
V_{IL}min	Minimum Input Low Level Voltage Value
V_{OL}max	Maximum Output Low Level Voltage Value
V_{OH}min	Minimum Output High Level Voltage Value

VSWR	Voltage Standing Wave Ratio
WLAN	Wireless Local Area Networks

CE Statement

The minimum distance between the user and/or any bystander and the radiating structure of the transmitter is 20cm.

Hereby, We, Quectel Wireless Solutions Co., Ltd. declares that the radio equipment type **AF20** is in compliance with the Directive 2014/53/EU.

The full text of the EU declaration of conformity is available at the following internet address: https://www.quectel.com/support/downloadb/TechnicalDocuments.htm

Building 5, Shanghai Business Park Phase III (Area B), No.1016 Tianlin Road, Minhang District,Shanghai 200233, China

This device is restricted to indoor use only when operating in 5150 to 5350Mhz frequency range in following countries: AT、BE、BG、HR、CY、CZ、DK、EE、FI、FR、DE、EL、HU、IE、IT、LV、LT、LU、MT、NL、PL、PT、RO、SK、SI、ES、SE

Legal InformationThis device may be operated in all member states of the EU.Observe national and local regulations where the device is used.

This device is restricted to indoor use only when operating in 5150to 5350Mhz frequency range in following countries:

AT	BE	BG	HR	CY	CZ	DK
EE	FI	FR	DE	EL	HU	IE
IT	LV	LT	LU	MT	NL	PL
PT	RO	SK	SI	ES	SE	

FCC Certification Requirements.

According to the definition of mobile and fixed device is described in Part 2.1091(b), this device is a mobile device.

And the following conditions must be met:

1. This Modular Approval is limited to OEM installation for mobile and fixed applications only. The antenna installation and operating configurations of this transmitter, including any applicable source-based time- averaging duty factor, antenna gain and cable loss must satisfy MPE categorical Exclusion Requirements of 2.1091.

2. The EUT is a mobile device; maintain at least a 20 cm separation between the EUT and the user's body and must not transmit simultaneously with any other antenna or transmitter.

3.A label with the following statements must be attached to the host end product: This device contains **FCC ID: XMR2023AF20.**

4.To comply with FCC regulations limiting both maximum RF output power and human exposure to RF radiation, maximum antenna gain (including cable loss) must not exceed:

- ❒ Buletooth:≤0.7dBi
- ❒ Buletooth(LE):≤0.7dBi
- ❒ Wi-Fi 2.4G:≤0.7dBi
- ❒ Wi-Fi 5G:≤1.14dBi

5. This module must not transmit simultaneously with any other antenna or transmitter

6. The host end product must include a user manual that clearly defines operating requirements and conditions that must be observed to ensure compliance with current FCC RF exposure guidelines.

For portable devices, in addition to the conditions 3 through 6 described above, a separate approval is required to satisfy the SAR requirements of FCC Part 2.1093

If the device is used for other equipment that separate approval is required for all other operating configurations, including portable configurations with respect to 2.1093 and different antenna configurations.

For this device, OEM integrators must be provided with labeling instructions of finished products. Please refer to KDB784748 D01 v07, section 8. Page 6/7 last two paragraphs:

A certified modular has the option to use a permanently affixed label, or an electronic label. For a permanently affixed label, the module must be labeled with an FCC ID - Section 2.926 (see 2.2 Certification (labeling requirements) above). The OEM manual must provide clear instructions explaining to the OEM the labeling requirements, options and OEM user manual instructions that are required (see next paragraph).

For a host using a certified modular with a standard fixed label, if (1) the module's FCC ID is not visible when installed in the host, or (2) if the host is marketed so that end users do not have straightforward commonly used methods for access to remove the module so that the FCC ID of the module is visible; then an additional permanent label referring to the enclosed module:"Contains Transmitter Module FCC ID: **XMR2023AF20.**" or "Contains FCC ID: **XMR2023AF20.**" must be used. The host OEM user manual must also contain clear instructions on how end users can find and/or access the module and the FCC ID.

The final host / module combination may also need to be evaluated against the FCC Part 15B criteria for unintentional radiators in order to be properly authorized for operation as a Part 15 digital device.

The user's manual or instruction manual for an intentional or unintentional radiator shall caution the user that changes or modifications not expressly approved by the party responsible for compliance could void the user's authority to operate the equipment. In cases where the manual is provided only in a form other than paper, such as on a computer disk or over the Internet, the information required by this section may be included in the manual in that alternative form, provided the user can reasonably be expected to have the capability to access information in that form.

This device complies with part 15 of the FCC Rules. Operation is subject to the following two conditions: (1) This device may not cause harmful interference, and (2) this device must accept any interference received, including interference that may cause undesired operation.

Changes or modifications not expressly approved by the manufacturer could void the user’s authority to operate the equipment.

CE Statement

The minimum distance between the user and/or any bystander and the radiating structure of the transmitter is 20cm.

Hereby, We, Quectel Wireless Solutions Co., Ltd. declares that the radio equipment type **AF20** is in compliance with the Directive 2014/53/EU.

The full text of the EU declaration of conformity is available at the following internet address: https://www.quectel.com/support/downloadb/TechnicalDocuments.htm

Building 5, Shanghai Business Park Phase III (Area B), No.1016 Tianlin Road, Minhang District,Shanghai 200233, China

FCC Certification Requirements.

According to the definition of mobile and fixed device is described in Part 2.1091(b), this device is a mobile device.

And the following conditions must be met:

1. This Modular Approval is limited to OEM installation for mobile and fixed applications only. The antenna installation and operating configurations of this transmitter, including any applicable source-based time- averaging duty factor, antenna gain and cable loss must satisfy MPE categorical Exclusion Requirements of 2.1091.

2. The EUT is a mobile device; maintain at least a 20 cm separation between the EUT and the user's body and must not transmit simultaneously with any other antenna or transmitter.

3.A label with the following statements must be attached to the host end product: This device contains **FCC ID: XMR2023AF20.**

4.To comply with FCC regulations limiting both maximum RF output power and human exposure to RF radiation, maximum antenna gain (including cable loss) must not exceed:

- Buletooth:≤0.73dBi

- Buletooth(LE):≤0.73dBi
- Wi-Fi 2.4G:≤0.73dBi
- Wi-Fi 5G:≤1.14dBi

5. This module must not transmit simultaneously with any other antenna or transmitter

6. The host end product must include a user manual that clearly defines operating requirements and conditions that must be observed to ensure compliance with current FCC RF exposure guidelines.

For portable devices, in addition to the conditions 3 through 6 described above, a separate approval is required to satisfy the SAR requirements of FCC Part 2.1093

If the device is used for other equipment that separate approval is required for all other operating configurations, including portable configurations with respect to 2.1093 and different antenna configurations.

For this device, OEM integrators must be provided with labeling instructions of finished products. Please refer to KDB784748 D01 v07, section 8. Page 6/7 last two paragraphs:

A certified modular has the option to use a permanently affixed label, or an electronic label. For a permanently affixed label, the module must be labeled with an FCC ID - Section 2.926 (see 2.2 Certification (labeling requirements) above). The OEM manual must provide clear instructions explaining to the OEM the labeling requirements, options and OEM user manual instructions that are required (see next paragraph).

For a host using a certified modular with a standard fixed label, if (1) the module's FCC ID is not visible when installed in the host, or (2) if the host is marketed so that end users do not have straightforward commonly used methods for access to remove the module so that the FCC ID of the module is visible; then an additional permanent label referring to the enclosed module:"Contains Transmitter Module FCC ID:

XMR2023AF20.” or “Contains FCC ID: **XMR2023AF20.**” must be used. The host OEM user manual must also contain clear instructions on how end users can find and/or access the module and the FCC ID.

The final host / module combination may also need to be evaluated against the FCC Part 15B criteria for unintentional radiators in order to be properly authorized for operation as a Part 15 digital device.

The user’s manual or instruction manual for an intentional or unintentional radiator shall caution the user that changes or modifications not expressly approved by the party responsible for compliance could void the user's authority to operate the equipment. In cases where the manual is provided only in a form other than paper, such as on a computer disk or over the Internet, the information required by this section may be included in the manual in that alternative form, provided the user can reasonably be expected to have the capability to access information in that form.

This device complies with part 15 of the FCC Rules. Operation is subject to the following two conditions: (1) This device may not cause harmful interference, and (2) this device must accept any interference received, including interference that may cause undesired operation.

Changes or modifications not expressly approved by the manufacturer could void the user’s authority to operate the equipment.