# BG95xA-GL
# Hardware Design

**LPWA Module Series**

Version: 1.1.1

Date: 2022-06-10

Status: Preliminary

**At Quectel, our aim is to provide timely and comprehensive services to our customers. If you require any assistance, please contact our headquarters:**

**Quectel Wireless Solutions Co., Ltd.**
Building 5, Shanghai Business Park Phase III (Area B), No.1016 Tianlin Road, Minhang District, Shanghai 200233, China
Tel: +86 21 5108 6236
Email: info@quectel.com

**Or our local offices. For more information, please visit:**
http://www.quectel.com/support/sales.htm.

**For technical support, or to report documentation errors, please visit:**
http://www.quectel.com/support/technical.htm.
Or email us at: support@quectel.com.

# Legal Notices

We offer information as a service to you. The provided information is based on your requirements and we make every effort to ensure its quality. You agree that you are responsible for using independent analysis and evaluation in designing intended products, and we provide reference designs for illustrative purposes only. Before using any hardware, software or service guided by this document, please read this notice carefully. Even though we employ commercially reasonable efforts to provide the best possible experience, you hereby acknowledge and agree that this document and related services hereunder are provided to you on an “as available” basis. We may revise or restate this document from time to time at our sole discretion without any prior notice to you.

# Use and Disclosure Restrictions

## License Agreements

Documents and information provided by us shall be kept confidential, unless specific permission is granted. They shall not be accessed or used for any purpose except as expressly provided herein.

## Copyright

Our and third-party products hereunder may contain copyrighted material. Such copyrighted material shall not be copied, reproduced, distributed, merged, published, translated, or modified without prior written consent. We and the third party have exclusive rights over copyrighted material. No license shall be granted or conveyed under any patents, copyrights, trademarks, or service mark rights. To avoid ambiguities, purchasing in any form cannot be deemed as granting a license other than the normal non-exclusive, royalty-free license to use the material. We reserve the right to take legal action for noncompliance with abovementioned requirements, unauthorized use, or other illegal or malicious use of the material.

## Trademarks

Except as otherwise set forth herein, nothing in this document shall be construed as conferring any rights to use any trademark, trade name or name, abbreviation, or counterfeit product thereof owned by Quectel or any third party in advertising, publicity, or other aspects.

## Third-Party Rights

This document may refer to hardware, software and/or documentation owned by one or more third parties ("third-party materials"). Use of such third-party materials shall be governed by all restrictions and obligations applicable thereto.

We make no warranty or representation, either express or implied, regarding the third-party materials, including but not limited to any implied or statutory, warranties of merchantability or fitness for a particular purpose, quiet enjoyment, system integration, information accuracy, and non-infringement of any third-party intellectual property rights with regard to the licensed technology or use thereof. Nothing herein constitutes a representation or warranty by us to either develop, enhance, modify, distribute, market, sell, offer for sale, or otherwise maintain production of any our products or any other hardware, software, device, tool, information, or product. We moreover disclaim any and all warranties arising from the course of dealing or usage of trade.

# Privacy Policy

To implement module functionality, certain device data are uploaded to Quectel's or third-party's servers, including carriers, chipset suppliers or customer-designated servers. Quectel, strictly abiding by the relevant laws and regulations, shall retain, use, disclose or otherwise process relevant data for the purpose of performing the service only or as permitted by applicable laws. Before data interaction with third parties, please be informed of their privacy and data security policy.

# Disclaimer

a) We acknowledge no liability for any injury or damage arising from the reliance upon the information.
b) We shall bear no liability resulting from any inaccuracies or omissions, or from the use of the information contained herein.
c) While we have made every effort to ensure that the functions and features under development are free from errors, it is possible that they could contain errors, inaccuracies, and omissions. Unless otherwise provided by valid agreement, we make no warranties of any kind, either implied or express, and exclude all liability for any loss or damage suffered in connection with the use of features and functions under development, to the maximum extent permitted by law, regardless of whether such loss or damage may have been foreseeable.
d) We are not responsible for the accessibility, safety, accuracy, availability, legality, or completeness of information, advertising, commercial offers, products, services, and materials on third-party websites and third-party resources.

***Copyright © Quectel Wireless Solutions Co., Ltd. 2022. All rights reserved***

# Safety Information

The following safety precautions must be observed during all phases of operation, such as usage, service or repair of any cellular terminal or mobile incorporating the module. Manufacturers of the cellular terminal should notify users and operating personnel of the following safety information by incorporating these guidelines into all manuals of the product. Otherwise, Quectel assumes no liability for customers' failure to comply with these precautions.

| | |
|---|---|
| | Full attention must be paid to driving at all times in order to reduce the risk of an accident. Using a mobile while driving (even with a handsfree kit) causes distraction and can lead to an accident. Please comply with laws and regulations restricting the use of wireless devices while driving. |
| | Switch off the cellular terminal or mobile before boarding an aircraft. The operation of wireless appliances in an aircraft is forbidden to prevent interference with communication systems. If there is an Airplane Mode, it should be enabled prior to boarding an aircraft. Please consult the airline staff for more restrictions on the use of wireless devices on an aircraft. |
| | Wireless devices may cause interference on sensitive medical equipment, so please be aware of the restrictions on the use of wireless devices when in hospitals, clinics or other healthcare facilities. |
| | Cellular terminals or mobiles operating over radio signal and cellular network cannot be guaranteed to connect in certain conditions, such as when the mobile bill is unpaid or the (U)SIM card is invalid. When emergent help is needed in such conditions, use emergency call if the device supports it. In order to make or receive a call, the cellular terminal or mobile must be switched on in a service area with adequate cellular signal strength. In an emergency, the device with emergency call function cannot be used as the only contact method considering network connection cannot be guaranteed under all circumstances. |
| | The cellular terminal or mobile contains a transceiver. When it is ON, it receives and transmits radio frequency signals. RF interference can occur if it is used close to TV sets, radios, computers or other electric equipment. |
| | In locations with explosive or potentially explosive atmospheres, obey all posted signs and turn off wireless devices such as mobile phone or other cellular terminals. Areas with explosive or potentially explosive atmospheres include fueling areas, below decks on boats, fuel or chemical transfer or storage facilities, and areas where the air contains chemicals or particles such as grain, dust or metal powders. |

# About the Document

## Revision History

| Version | Date | Author | Description |
|---|---|---|---|
| - | 2021-07-07 | Lex LI/<br>Ben JIANG | Creation of the document |
| 1.0 | 2022-04-22 | Lex LI/<br>Ben JIANG | First official release |
| 1.1.0 | 2022-05-30 | Lex LI/<br>Ben JIANG | Preliminary:<br>Added the applicable modules of BG953A-GL and BG955A-GL. |
| 1.1.1 | 2022-06-10 | Lex LI/<br>Ben JIANG | Preliminary:<br>Updated the functional diagram of BG955A-GL (Figure 4) |

# Contents

**Safety Information** ..... 3
**About the Document** ..... 4
**Contents** ..... 5
**Table Index** ..... 8
**Figure Index** ..... 10

**1 Introduction** ..... 12
1.1. Special Mark ..... 12

**2 Product Overview** ..... 13
2.1. Frequency Bands and Functions ..... 14
2.2. Key Features ..... 15
2.3. Functional Diagram ..... 17
2.4. Pin Assignment ..... 22
2.5. Pin Description ..... 25
2.6. EVB Kit ..... 31

**3 Operating Characteristics** ..... 32
3.1. Operating Modes ..... 32
3.2. Airplane Mode ..... 33
3.3. Power Saving Mode (PSM) ..... 33
3.4. Extended Idle Mode DRX (e-I-DRX) ..... 34
3.4.1. e-I-DRX Sleep Mode ..... 35
3.4.2. e-I-DRX Idle Mode ..... 35
3.5. Sleep Mode ..... 35
3.5.1. UART Application Scenario ..... 35
3.6. Recovery Mode ..... 37
3.7. Power Supply ..... 37
3.7.1. Power Supply Pins ..... 37
3.7.2. Voltage Stability Requirements ..... 38
3.7.3. Power Supply Monitoring ..... 39
3.8. Turn On ..... 40
3.8.1. Turn On with PWRKEY ..... 40
3.9. Turn Off ..... 43
3.9.1. Turn Off with PWRKEY and PON_TRIG ..... 43
3.9.2. Turn Off with AT Command and PON_TRIG ..... 44
3.10. Reset ..... 45
3.11. PON_TRIG ..... 47

**4 Application Interfaces** ..... 49
4.1. (U)SIM Interface ..... 49
4.2. USB Interface ..... 51
4.3. UART Interfaces ..... 53

4.4. ADC Interfaces ..... 56
4.5. Indication Signals ..... 57
4.5.1. PSM Status Indication ..... 57
4.5.2. Network Status Indication ..... 58
4.5.3. STATUS ..... 59
4.5.4. MAIN_RI ..... 60
4.6. GRFC Interfaces ..... 60
4.7. GPIO Interface ..... 61
4.8. GNSS Control and Indication Interfaces ..... 62

**5 RF Specifications ..... 63**
5.1. Cellular Network ..... 63
5.1.1. Antenna Interface & Frequency Bands ..... 63
5.1.2. Tx Power ..... 64
5.1.3. Rx Sensitivity ..... 65
5.1.4. Reference Design ..... 68
5.2. GNSS ..... 70
5.2.1. Antenna Interface & Frequency Bands ..... 70
5.2.2. GNSS Performance ..... 71
5.2.3. Reference Design ..... 73
5.3. Layout Guidelines ..... 74
5.4. RF Routing Guidelines ..... 74
5.5. Antenna Design Requirements ..... 77
5.6. RF Connector Recommendation ..... 80

**6 Reliability and Electrical Characteristics ..... 89**
6.1. Absolute Maximum Ratings ..... 89
6.2. Power Supply Ratings ..... 90
6.3. Power Consumption ..... 90
6.3.1. BG950A-GL Power Consumption ..... 90
6.3.2. BG951A-GL Power Consumption ..... 92
6.3.3. BG953A-GL Power Consumption ..... 95
6.3.4. BG955A-GL Power Consumption ..... 97
6.3.5. GNSS Power Consumption ..... 101
6.4. Digital I/O Characteristic ..... 104
6.5. ESD Protection ..... 105
6.6. Operating and Storage Temperatures ..... 105

**7 Mechanical Information ..... 107**
7.1. Top and Side View Dimensions ..... 107
7.2. Recommended Footprint ..... 109
7.3. Top and Bottom Views ..... 110

**8 Storage, Manufacturing & Packaging ..... 111**
8.1. Storage Conditions ..... 111
8.2. Manufacturing and Soldering ..... 112

8.3. Packaging Specifications ..... 113
8.3.1. Carrier Tape ..... 113
8.3.2. Plastic Reel ..... 114
8.3.3. Packing Process ..... 115

**9 Appendix References ..... 116**

# Table Index

Table 1: Special Mark ..... 12
Table 2: Brief Introduction of the Module ..... 13
Table 3: Wireless Network Types ..... 14
Table 4: Key Features ..... 15
Table 5: I/O Parameters Definition ..... 25
Table 6: Pin Definition – Pins with Same Functions on BG95xA-GL ..... 25
Table 7: Pin Definition – Pins with Different Functions on BG95xA-GL ..... 30
Table 8: Operating Mode Overview ..... 32
Table 9: Power Supply Pin Definition of BG950A-GL/BG951A-GL/BG953A-GL ..... 37
Table 10: Power Supply Pin Definition of BG955A-GL ..... 38
Table 11: PWRKEY Pin Definition ..... 40
Table 12: RESET_N Pin Definition ..... 45
Table 13: Pin Definition of PON_TRIG ..... 47
Table 14: (U)SIM Interface Pin Definition ..... 49
Table 15: USB Interface Pin Definition ..... 51
Table 16: Main UART Interface Pin Definition ..... 53
Table 17: Debug UART Interface Pin Definition ..... 54
Table 18: BG950A-GL & BG953A-GL & BG955A-GL CLI UART Interface Pin Definition ..... 54
Table 19: BG951A-GL CLI UART Interface Pin Definition ..... 54
Table 20: BG951A-GL GNSS UART Interface Pin Definition ..... 54
Table 21: Pin Definition of ADC Interfaces ..... 56
Table 22: Characteristics of ADC Interfaces ..... 57
Table 23: PSM_IND Pin Definition ..... 57
Table 24: Pin Definition of NET_STATUS ..... 58
Table 25: Working State of Network Connection Status Indication ..... 58
Table 26: STATUS Pin Definition ..... 59
Table 27: MAIN_RI Pin Definition ..... 60
Table 28: MAIN_RI Default Behaviors ..... 60
Table 29: GRFC Interface Pin Definitions ..... 60
Table 30: GRFC Interface Truth Table ..... 61
Table 31: GPIO Interface Pin Definitions ..... 61
Table 32: Pin Definition of GNSS Control and Indication Interfaces ..... 62
Table 33: Pin Definition of Cellular Network Interface ..... 63
Table 34: Operating Frequency ..... 63
Table 35: RF Output Power ..... 64
Table 36: Conducted RF Receiving Sensitivity of BG950A-GL/BG951A-GL ..... 66
Table 37: Conducted RF Receiving Sensitivity of BG955A-GL ..... 67
Table 38: Pin Definition of GNSS Antenna Interface ..... 71
Table 39: BG950A-GL & BG953A-GL & BG955A-GL GNSS Frequency ..... 71
Table 40: BG951A-GL GNSS Frequency ..... 71
Table 41: BG950A-GL & BG953A-GL GNSS Performance ..... 71

Table 42: BG951A-GL GNSS Performance ..... 72
Table 43: BG955A-GL GNSS Performance ..... 72
Table 44: Antenna Design Requirements ..... 77
Table 45: Absolute Maximum Ratings ..... 89
Table 46: BG950A-GL & BG951A-GL & BG953A-GL Power Supply Ratings ..... 90
Table 47: BG955A-GL Power Supply Ratings ..... 90
Table 48: BG950A-GL Power Consumption (Power Supply: 3.3 V, Room Temperature) ..... 90
Table 49: BG951A-GL Power Consumption (Power Supply: 3.3 V, Room Temperature) ..... 93
Table 50: BG953A-GL Power Consumption (Power Supply: 3.3 V, Room Temperature) ..... 95
Table 51: BG955A-GL Power Consumption (Power Supply: 3.8 V, Room Temperature) ..... 97
Table 52: BG950A-GL GNSS Power Consumption ..... 102
Table 53: BG951A-GL GNSS Power Consumption ..... 103
Table 54: BG953A-GL GNSS Power Consumption ..... 103
Table 55: BG955A-GL GNSS Power Consumption ..... 104
Table 56: 1.8 V Digital I/O Requirements – (U)SIM ..... 104
Table 57: 1.8 V Digital I/O Requirements – Others ..... 104
Table 58: Electrostatics Discharge Characteristics (Temperature: 25 °C, Humidity: 45 %) ..... 105
Table 59: Operating and Storage Temperatures ..... 105
Table 60: Recommended Thermal Profile Parameters ..... 113
Table 61: Carrier Tape Dimension Table (Unit: mm) ..... 114
Table 62: Plastic Reel Dimension Table (Unit: mm) ..... 114
Table 63: Related Documents ..... 116
Table 64: Terms and Abbreviations ..... 116

# Figure Index

Figure 1: Functional Diagram of BG950A-GL ..... 18
Figure 2: Functional Diagram of BG951A-GL ..... 19
Figure 3: Functional Diagram of BG953A-GL ..... 20
Figure 4: Functional Diagram of BG955A-GL ..... 21
Figure 5: Pin Assignment of BG950A-GL & BG953A-GL (Top View) ..... 22
Figure 6: Pin Assignment of BG951A-GL (Top View) ..... 23
Figure 7: Pin Assignment of BG955A-GL (Top View) ..... 24
Figure 8: Sleep Mode Application via UART Interface ..... 36
Figure 9: Power Supply Limits During Burst Transmission ..... 38
Figure 10: Star Structure of Power Supply ..... 39
Figure 11: Turn On Module With a Driving Circuit ..... 40
Figure 12: Turn On Module With a Button ..... 40
Figure 13: Power-up Timing (After VBAT is Stable for 100–200 ms) ..... 41
Figure 14: Power-up Timing (After VBAT is Stable for more than 250 ms) ..... 42
Figure 15: Restart Timing ..... 43
Figure 16: Power-down Timing (PWRKEY & PON_TRIG) ..... 44
Figure 17: Power-down Timing (AT Command & PON_TRIG) ..... 44
Figure 18: Reference Circuit of RESET_N with a Driving Circuit ..... 45
Figure 19: Reference Circuit of RESET_N with a Button ..... 46
Figure 20: Reset Timing ..... 46
Figure 21: PON_TRIG Reference Circuit 1 ..... 47
Figure 22: PON_TRIG Reference Circuit 2 ..... 48
Figure 23: Reference Circuit of (U)SIM Interface with an 8-Pin (U)SIM Card Connector ..... 50
Figure 24: Reference Circuit of (U)SIM Interface with a 6-Pin (U)SIM Card Connector ..... 50
Figure 25: Reference Circuit of USB Application ..... 52
Figure 26: Main UART Reference Design (Translator Chip) ..... 55
Figure 27: Main UART Reference Design (Transistor Circuit) ..... 56
Figure 28: Reference Circuit of PSM Status Indication ..... 58
Figure 29: Reference Circuit of Network Status Indication ..... 59
Figure 30: Reference Circuit of STATUS ..... 59
Figure 31: Reference Circuit of Main Antenna Interface ..... 70
Figure 32: Reference Design of GNSS Antenna Interface ..... 74
Figure 33: Microstrip Design on a 2-Layer PCB ..... 75
Figure 34: Coplanar Waveguide Design on a 2-Layer PCB ..... 75
Figure 35: Coplanar Waveguide Design on a 4-layer PCB (Layer 3 as Reference Ground) ..... 75
Figure 36: Coplanar Waveguide Design on a 4-Layer PCB (Layer 4 as Reference Ground) ..... 76
Figure 37: Dimensions of the Receptacle (Unit: mm) ..... 83
Figure 38: Specifications of Mated Plugs ..... 85
Figure 39: Space Factor of Mated Connectors (Unit: mm) ..... 88
Figure 40: Module Top and Side Dimensions (Unit: mm) ..... 107
Figure 41: Module Bottom Dimensions (Bottom View, Unit: mm) ..... 108

Figure 42: Recommended Footprint (Top View, Unit: mm) ..... 109
Figure 43: Top & Bottom Views of BG95xA-GL ..... 110
Figure 44: Recommended Reflow Soldering Thermal Profile ..... 112
Figure 45: Carrier Tape Dimension Drawing ..... 114
Figure 46: Plastic Reel Dimension Drawing ..... 114
Figure 47: Packaging Process ..... 115

# 1 Introduction

This document helps you gain a quick insight into BG95xA-GL modules, their air and hardware interfaces, electrical and mechanical specifications, and other related information, as well. In addition, it includes some reference designs that, coupled with application notes and user guides, facilitate the development and deployment of your LPWA module applications.

**NOTE**

For conciseness purposes, BG95xA-GL modules will hereinafter be referred to collectively as "the module/modules" in parts hereof applicable to four modules, and individually as "BG950A-GL", "BG951A-GL", "BG953A-GL" and "BG955A-GL" in parts hereof referring to the differences between them.

## 1.1. Special Mark

**Table 1: Special Mark**

| Mark | Definition |
|---|---|
| * | Unless otherwise specified, when an asterisk (*) is used after a function, feature, interface, pin name, AT command, or argument, it indicates that the function, feature, interface, pin, AT command, or argument is under development and currently not supported; and the asterisk (*) after a model indicates that the sample of the model is currently unavailable. |

# 2 Product Overview

The module is an embedded IoT (LTE Cat M1, NB1/NB2*) wireless communication module. It supports data connectivity on LTE HD-FDD network, and features GNSS functionality to meet your specific application demands. Additionally, BG955A-GL also supports GPRS network.

It is an SMD type module that can be engineered into M2M applications, such as smart metering, tracking system, security, wireless POS, and other wearable devices.

The module is an industrial-grade module for industrial and commercial applications only.

Related information and details are listed in the table below.

**Table 2: Brief Introduction of the Module**

| Categories | |
|---|---|
| Packaging and pins number | LGA; 102 pieces |
| Dimensions | (23.6 ±0.2) mm × (19.9 ±0.2) mm × (2.2 ±0.2) mm |
| Weight | Approx. 2.15 g |
| Wireless technologies | LTE, GNSS and GPRS |
| Variants | BG950A-GL, BG951A-GL, BG953A-GL, BG955A-GL |

## 2.1. Frequency Bands and Functions

**Table 3: Wireless Network Types**

| Module | Supported Bands | LTE Bands Power Class | GNSS |
|---|---|---|---|
| **BG950A-GL** | **Cat M1:**<br>LTE HD-FDD:<br>B1/B2/B3/B4/B5/B8/B12/B13/B18/B19/B20/B25/B26/B27/B28/B66<br>**Cat NB1/NB2*** [1]**:**<br>LTE HD-FDD:<br>B1/B2/B3/B4/B5/B8/B12/B13/B17/B18/B19/B20/B25/B28/B66 | Power Class 3<br>(23 dBm ±2.7 dB) | GPS,<br>GLONASS. |
| **BG951A-GL** | **Cat M1:**<br>LTE HD-FDD:<br>B1/B2/B3/B4/B5/B8/B12/B13/B18/B19/B20/B25/B26/B27/B28/B66<br>**Cat NB1/NB2*** [1]**:**<br>LTE HD-FDD:<br>B1/B2/B3/B4/B5/B8/B12/B13/B17/B18/B19/B20/B25/B28/B66 | Power Class 3<br>(23 dBm ±2.7 dB) | GPS,<br>GLONASS,<br>BDS,<br>Galileo,<br>QZSS. |
| **BG953A-GL** | **Cat M1:**<br>LTE HD-FDD:<br>B1/B2/B3/B4/B5/B8/B12/B13/B18/B19/B20/B25/B26/B27/B28/B66<br>**Cat NB1/NB2*** [1]**:**<br>LTE HD-FDD:<br>B1/B2/B3/B4/B5/B8/B12/B13/B17/B18/B19/B20/B25/B28/B66 | Power Class 3<br>(23 dBm ±2.7 dB) | GPS,<br>GLONASS. |
| **BG955A-GL** | **Cat M1:**<br>LTE HD-FDD:<br>B1/B2/B3/B4/B5/B8/B12/B13/B18/B19/B20/B25/B26/B27/B28/B66<br>**Cat NB1/NB2*** [1]**:**<br>LTE HD-FDD:<br>B1/B2/B3/B4/B5/B8/B12/B13/B17/B18/B19/B20/B25/B28/B66<br>**GPRS:**<br>GSM850/EGSM900/DCS1800/PCS1900 | Power Class 3<br>(23 dBm ±2.7 dB) | GPS,<br>GLONASS. |

[1] LTE Cat NB2* is backward compatible with LTE Cat NB1.

**NOTE**

The baseband chip of BG950A-GL, BG953A-GL and BG955A-GL integrates the GNSS function, whereas the internal baseband chip and GNSS chip are separated on BG951A-GL. Therefore, BG951A-GL supports concurrent operation of LTE and GNSS, whereas BG950A-GL, BG953A-GL and BG955A-GL does not.

## 2.2. Key Features

**Table 4: Key Features**

| Features | Details |
|---|---|
| Power Supply | **BG950A-GL/BG951A-GL/BG953A-GL:**<br>● Supply voltage: 2.2–4.35 V<br>● Typical supply voltage: 3.3 V<br>**BG955A-GL:**<br>● Supply voltage: 3.3–4.3 V<br>● Typical supply voltage: 3.8 V |
| SMS | ● Text and PDU mode<br>● Point-to-point MO and MT<br>● SMS cell broadcast<br>● SMS storage: ME by default |
| (U)SIM Interface | **BG950A-GL/BG951A-GL/BG955A-GL:**<br>● Supports 1.8 V external (U)SIM/eSIM card only<br>**BG953A-GL:**<br>● Built-in iSIM. If iSIM function is used, an external (U)SIM card is required. |
| USB Interface | ● Compliant with USB 2.0 specifications<br>● Supports full speed mode only<br>● Used for AT command communication, data transmission, software debugging and firmware upgrade*<br>● USB serial driver:<br>- Windows 7/8/8.1/10<br>- Linux 2.6–5.15 |
| UART Interfaces | **Main UART:**<br>● Used for AT command communication and data transmission<br>● Baud rate: 115200 bps by default<br>● Default frame format: 8N1 (8 data bits, no parity, 1 stop bit)<br>● Supports RTS and CTS hardware flow control<br>**CLI UART [2]:** |

[2] BG951A-GL only supports one CLI UART interface, while BG950A-GL, BG953A-GL and BG955A-GL support two CLI

| | |
|---|---|
| | ● Used for firmware upgrade, software debugging, log output, GNSS data and NMEA sentence output<br>● Baud rate: 115200 bps by default<br>● Default frame format: 8N1 (8 data bits, no parity, 1 stop bit)<br>● Supports RTS and CTS hardware flow control<br>**Debug UART:**<br>● Used for RF calibration and log output<br>● Baud rate: 961200 bps by default<br>● Default frame format: 8N1 (8 data bits, no parity, 1 stop bit)<br>● Supports RTS and CTS hardware flow control<br>**GNSS UART:**<br>● Only BG951A-GL module: used for GNSS data and GNSS NMEA sentence output, and GNSS firmware upgrade<br>● Baud rate: 115200 bps by default |
| Network Indication | Pin NET_STATUS to indicate network connectivity status |
| AT Commands | ● *3GPP TS 27.007* and *3GPP TS 27.005* AT commands<br>● Quectel enhanced AT commands |
| Antenna Interface | ● Main antenna interface (ANT_MAIN), 50 Ω impedance<br>● GNSS antenna interface (ANT_GNSS), 50 Ω impedance |
| Transmitting Power | ● Class 3 (23 dBm ±2.7 dB) for LTE bands<br>● Class 4 (33 dBm ±2 dB) for GSM850<br>● Class 4 (33 dBm ±2 dB) for EGSM900<br>● Class 1 (30 dBm ±2 dB) for DCS1800<br>● Class 1 (30 dBm ±2 dB) for PCS1900 |
| LTE Features | ● Supports 3GPP Rel-13/Rel-14*<br>● Supports LTE Cat M1, NB1/NB2*<br>● Supports 1.4 MHz RF bandwidth for LTE Cat M1<br>● Supports 200 kHz RF bandwidth for LTE Cat NB1/NB2*<br>● Rel-13:<br>Cat M1: 300 kbps (DL)/375 kbps (UL)<br>Cat NB1: 27.2 kbps (DL)/62.5 kbps (UL)<br>● Rel-14*:<br>Cat M1: 588 kbps (DL)/1119 kbps (UL)<br>Cat NB2*: 127 kbps (DL)/158 kbps (UL) |
| GSM Features | **GPRS:**<br>● Support GPRS multi-slot class 10<br>● Coding scheme: CS-1, CS-2, CS-3 and CS-4<br>● Max. 85.6 kbps (DL)/42.8 kbps (UL) |

UART interfaces, more precisely, pin 27 (CLI_TXD1) and pin 28 (CLI_RXD1) are connected to pin 95 (CLI_TXD2) and pin 94 (CLI_RXD2) respectively inside the module.

| | |
|---|---|
| Internet Protocol Features | ● Supports PPP/TCP/UDP/SSL/MQTT/FTP(S)/HTTP(S)/LwM2M/IPv4/IPv6/TLS/DTLS/PING/CoAP/NITZ protocols<br>● Supports PAP and CHAP for PPP connections |
| GNSS Features | **BG950A-GL/BG953A-GL/BG955A-GL:**<br>● GPS, GLONASS<br>**BG951A-GL:**<br>● GPS, GLONASS, BDS, Galileo, QZSS |
| Temperature Range | ● Operating temperature range [3]: -35 to +75 °C<br>● Extended temperature range [4]: -40 to +85 °C<br>● Storage temperature range: -40 to +90 °C |
| Firmware Upgrade | ● CLI UART interface [2]<br>● USB 2.0 interface<br>● DFOTA |
| RoHS | All hardware components are fully compliant with EU RoHS directive. |

## 2.3. Functional Diagram

The block diagrams and major functional parts of BG95xA-GL modules are illustrated in the following figures.

- Power management
- Baseband
- Radio frequency
- Peripheral interfaces

[3] Within the operating temperature range, the module meets 3GPP specifications.
[4] Within the extended temperature range, the module retains the ability to establish and maintain functions such as SMS and data transmission, without any unrecoverable malfunction. Radio spectrum and radio network are not influenced, while one or more specifications, such as $P_{out}$, may exceed the specified 3GPP tolerances. When the temperature returns to the operating temperature range, the module meets 3GPP specifications again.

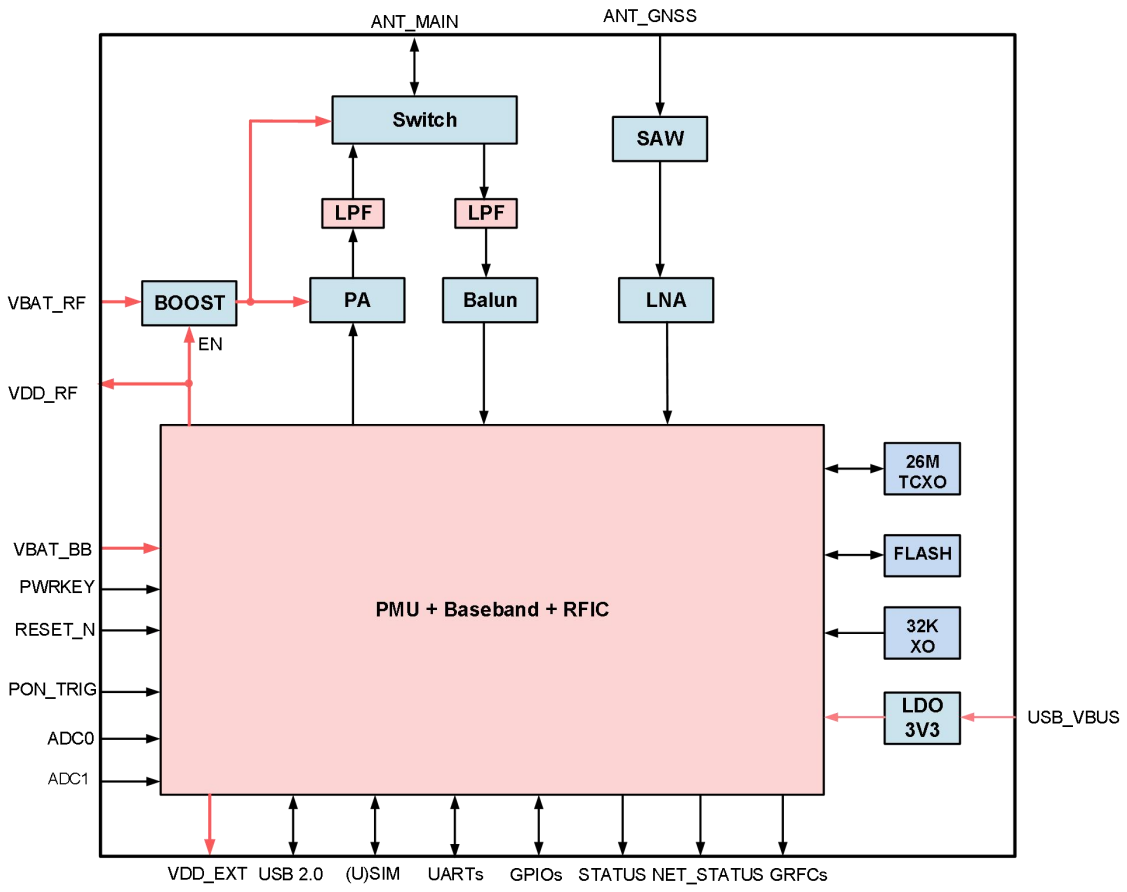


**Figure 1: Functional Diagram of BG950A-GL**

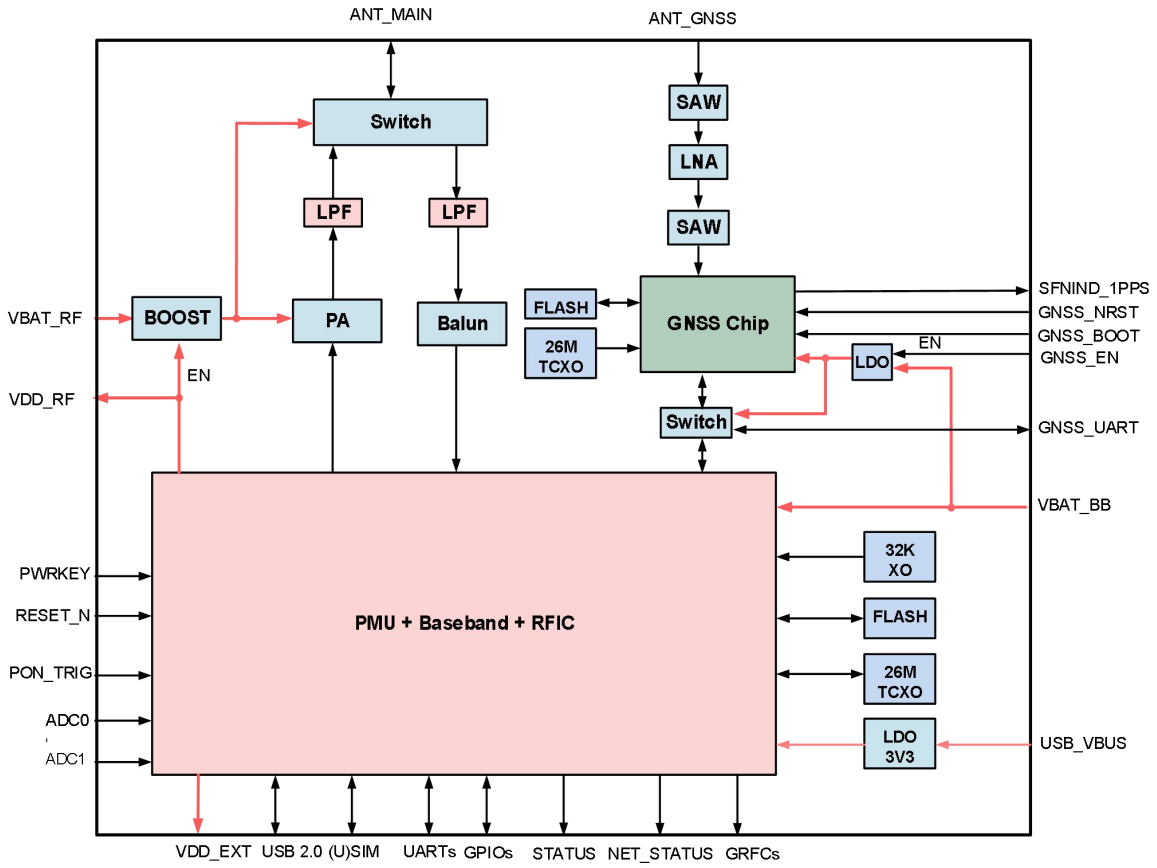


**Figure 2: Functional Diagram of BG951A-GL**

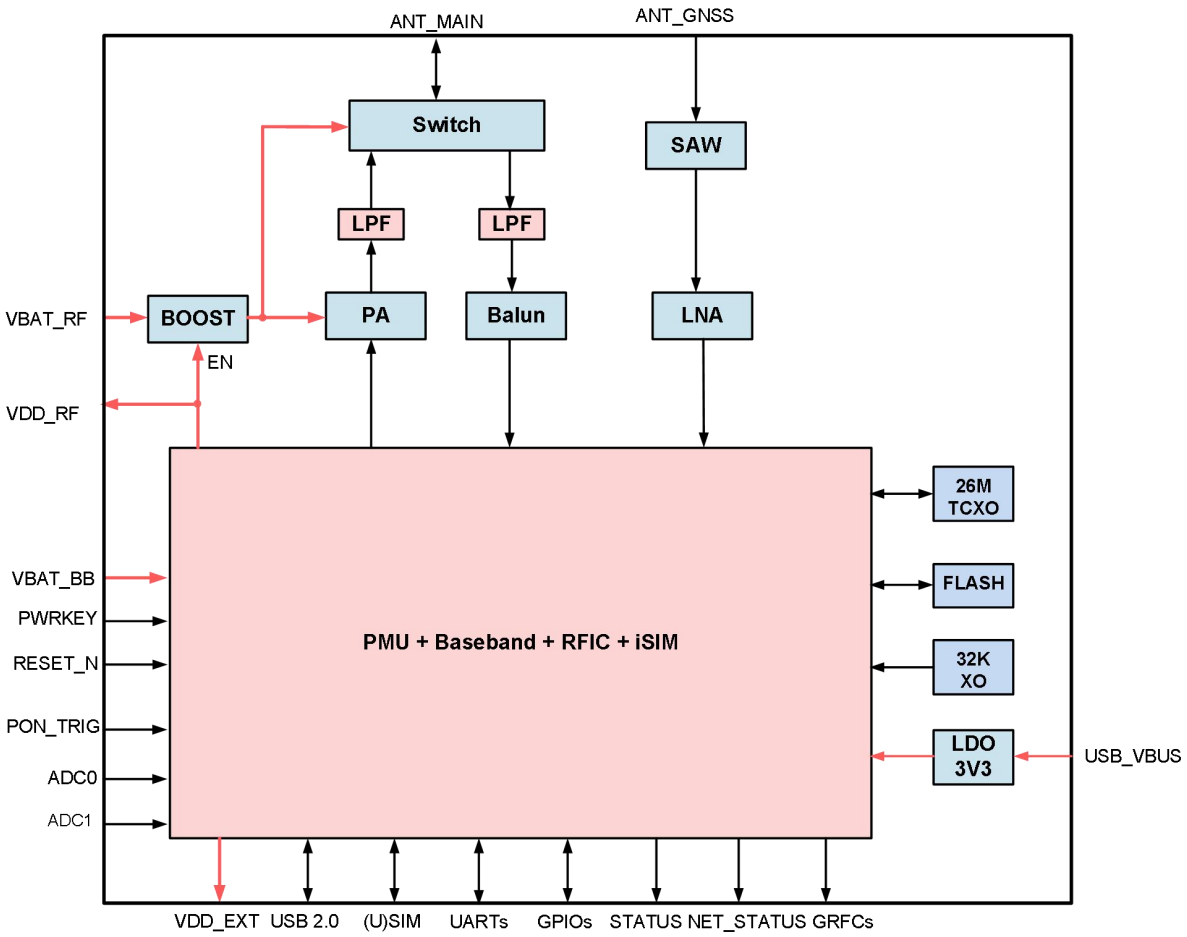


Figure 3: Functional Diagram of BG953A-GL

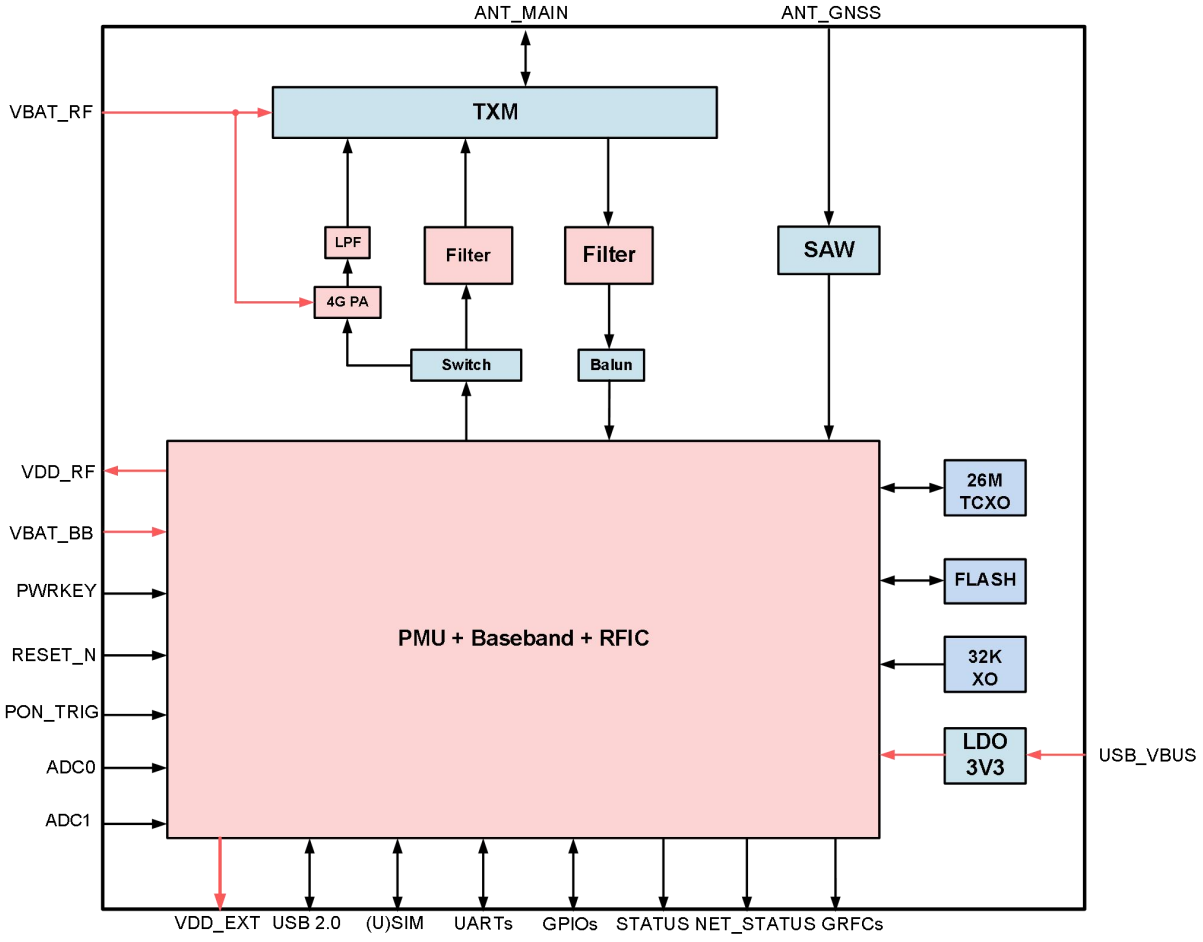


Figure 4: Functional Diagram of BG955A-GL

## 2.4. Pin Assignment

The following figure illustrates the pin assignment of BG950A-GL and BG953A-GL.

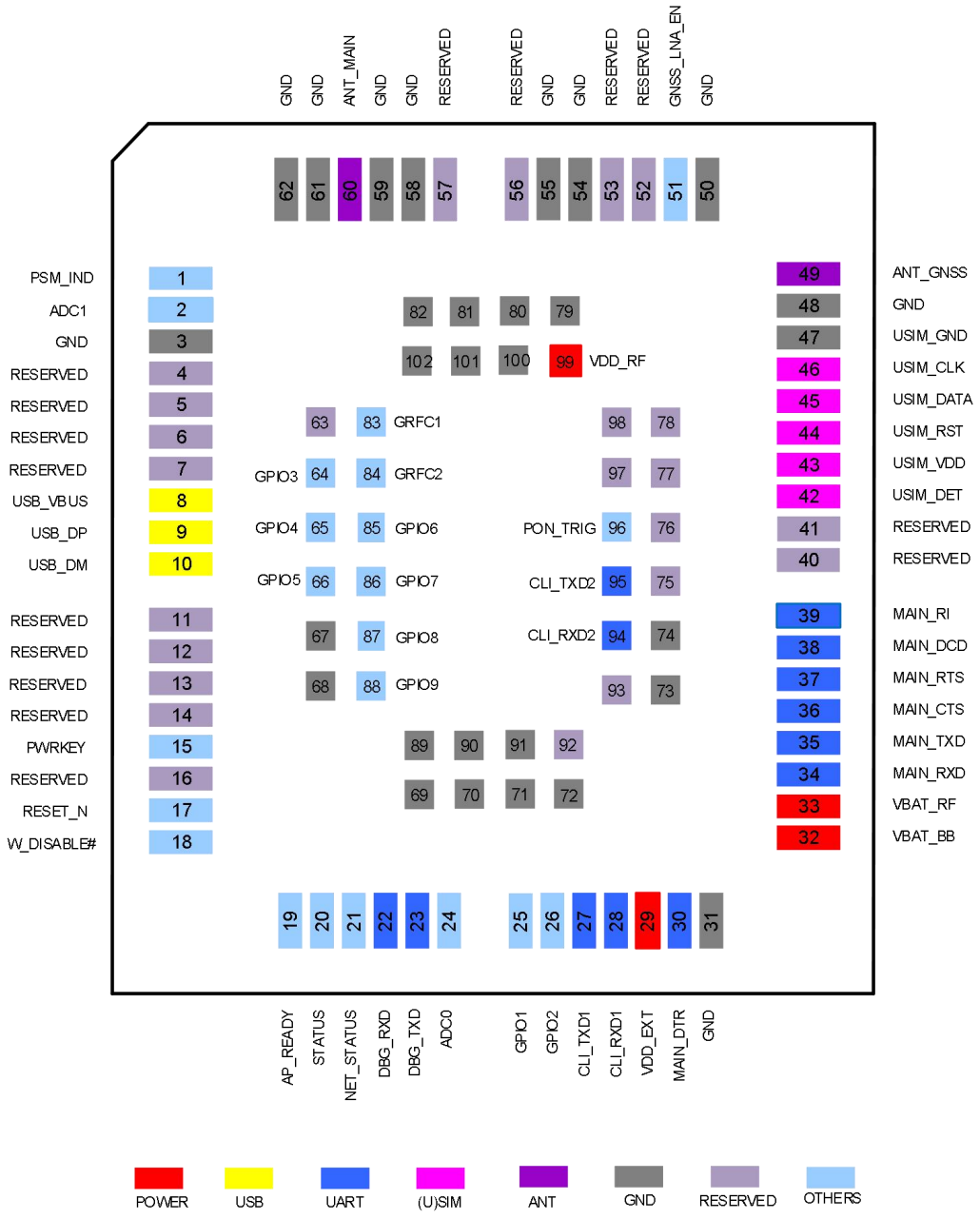


**Figure 5: Pin Assignment of BG950A-GL & BG953A-GL (Top View)**

The following figure illustrates the pin assignment of BG951A-GL.

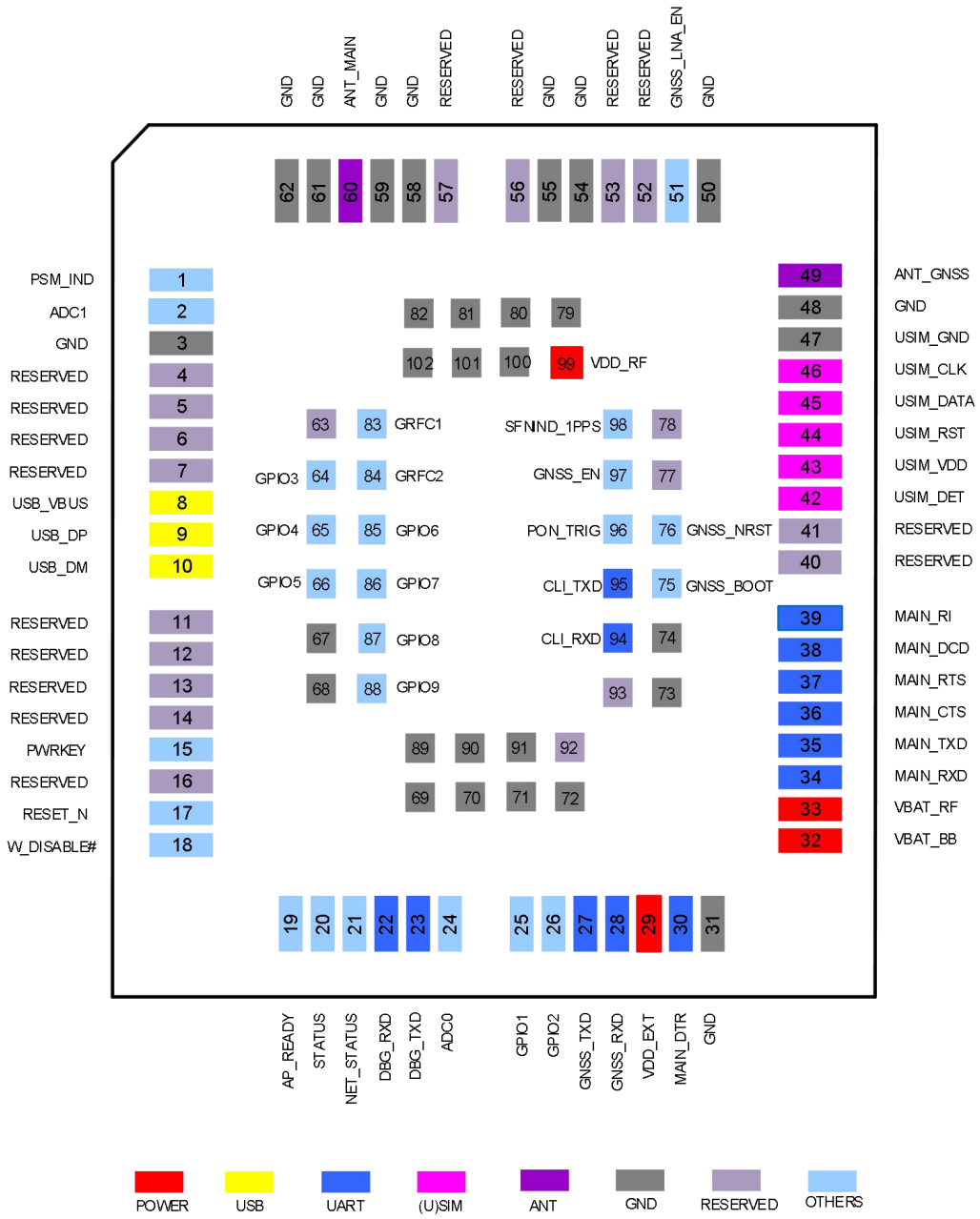


**Figure 6: Pin Assignment of BG951A-GL (Top View)**

The following figure illustrates the pin assignment of BG955A-GL.

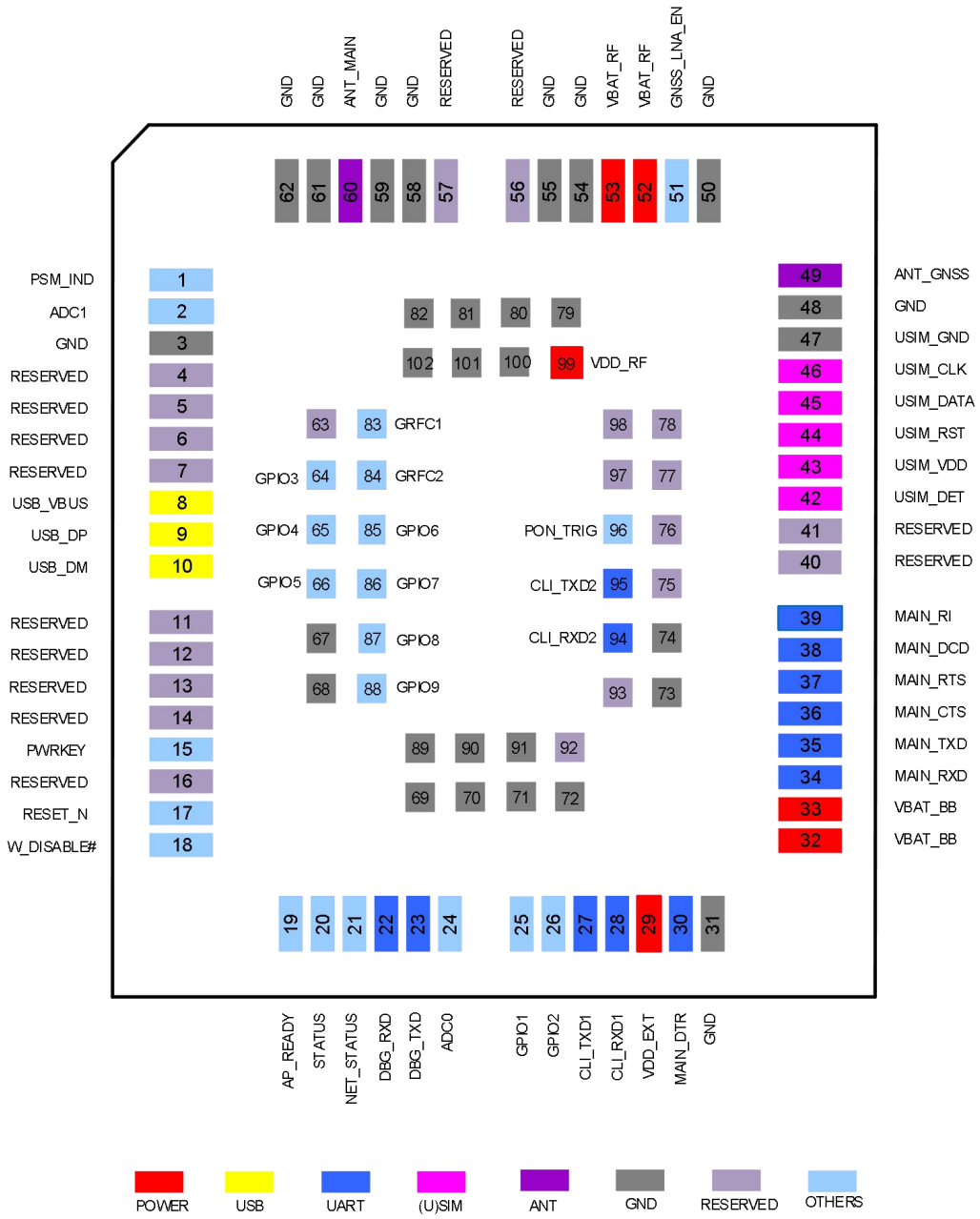


**Figure 7: Pin Assignment of BG955A-GL (Top View)**

**NOTE**

1. ADC input voltage must not exceed 1.8 V.
2. Keep all RESERVED pins and unused pins unconnected.
3. GND pins should be connected to ground in the design.
4. Only BG951A-GL supports GNSS_BOOT (pin 75), GNSS_NRST (pin 76), GNSS_EN (pin 97) and

SFNIND_1PPS (pin 98).

5. On BG950A-GL, BG953A-GL and BG955A-GL, pin 27 (CLI_TXD1) and pin 28 (CLI_RXD1) are connected to pin 95 (CLI_TXD2) and pin 94 (CLI_RXD2) respectively inside the module.
6. The LNA is integrated inside the module. It is not recommended to use an external LNA. It is strongly recommended to keep GNSS_LNA_EN (pin 51) and VDD_RF (pin 99) unconnected.

## 2.5. Pin Description

The following table shows the DC characteristics and pin descriptions.

**Table 5: I/O Parameters Definition**

| Type | Description |
|---|---|
| AI | Analog Input |
| AIO | Analog Input/Output |
| DI | Digital Input |
| DO | Digital Output |
| DIO | Digital Input/Output |
| OD | Open Drain |
| PI | Power Input |
| PO | Power Output |

**Table 6: Pin Definition – Pins with Same Functions on BG95xA-GL**

| **Power Supply Output** | | | | | |
|---|---|---|---|---|---|
| **Pin Name** | **Pin No.** | **I/O** | **Description** | **DC Characteristics** | **Comment** |
| VDD_EXT | 29 | PO | Provide 1.8 V for external circuits | Vnom = 1.8 V<br>$I_O$max = 50 mA | |
| **Turn On/Off** | | | | | |
| **Pin Name** | **Pin No.** | **I/O** | **Description** | **DC Characteristics** | **Comment** |

| | | | | | |
|---|---|---|---|---|---|
| PWRKEY | 15 | DI | Turn on/off the module | $V_{IL}$max = 0.3 V<br>$V_{IH}$min = 1.0 V | Internally pulled up with a 470 kΩ resistor. |
| **Reset** | | | | | |
| **Pin Name** | **Pin No.** | **I/O** | **Description** | **DC Characteristics** | **Comment** |
| RESET_N | 17 | DI | Reset the module | $V_{IL}$max = 0.3 V<br>$V_{IH}$min = 1.3 V | Internally pulled up with a 470 kΩ resistor. |
| **Status Indication** | | | | | |
| **Pin Name** | **Pin No.** | **I/O** | **Description** | **DC Characteristics** | **Comment** |
| PSM_IND | 1 | DO | Indicate the module's power saving mode | $V_{OL}$max = 0.36 V<br>$V_{OH}$min = 1.44 V | 1.8 V power domain.<br>If unused, keep these pins open. |
| STATUS | 20 | DO | Indicate the module's operation status | | |
| NET_STATUS | 21 | DO | Indicate the module's network activity status | | |
| **USB Interface** | | | | | |
| **Pin Name** | **Pin No.** | **I/O** | **Description** | **DC Characteristics** | **Comment** |
| USB_VBUS | 8 | AI | USB connection detect | Vnom = 5.0 V | Typical 5.0 V |
| USB_DP | 9 | AIO | USB differential data (+) | Vmax = 4.1 V<br>Vmin = -0.2 V | Compliant with the standard USB 2.0 specification.<br>Requires differential impedance of 90 Ω. |
| USB_DM | 10 | AIO | USB differential data (-) | | |
| **(U)SIM Interface** | | | | | |
| **Pin Name** | **Pin No.** | **I/O** | **Description** | **DC Characteristics** | **Comment** |
| USIM_DET | 42 | DI | (U)SIM card hot-plug detect | $V_{IL}$min = -0.2 V<br>$V_{IL}$max = 0.54 V<br>$V_{IH}$min = 1.26 V<br>$V_{IH}$max = 2.0 V | 1.8 V power domain.<br>If unused, keep this pin open. |
| USIM_VDD | 43 | PO | (U)SIM card power supply | Vmax = 1.9 V<br>Vmin = 1.7 V | Only 1.8 V (U)SIM card is supported. |
| USIM_RST | 44 | DO | (U)SIM card reset | $V_{OL}$max = 0.36 V<br>$V_{OH}$min = 1.44 V | 1.8 V power domain. |
| USIM_DATA | 45 | DIO | (U)SIM card data | $V_{IL}$min = -0.2 V<br>$V_{IL}$max = 0.54 V | |

| | | | | | |
|---|---|---|---|---|---|
| | | | | $V_{IH}$min = 1.26 V<br>$V_{IH}$max = 2.0 V<br>$V_{OL}$max = 0.36 V<br>$V_{OH}$min = 1.44 V | |
| USIM_CLK | 46 | DO | (U)SIM card clock | $V_{OL}$max = 0.36 V<br>$V_{OH}$min = 1.44 V | |
| USIM_GND | 47 | - | Specified ground for (U)SIM card | - | - |
| **Main UART Interface** | | | | | |
| **Pin Name** | **Pin No.** | **I/O** | **Description** | **DC Characteristics** | **Comment** |
| MAIN_DTR | 30 | DI | Main UART data terminal ready | $V_{IL}$min = -0.2 V<br>$V_{IL}$max = 0.54 V<br>$V_{IH}$min = 1.26 V<br>$V_{IH}$max = 2.0 V | 1.8 V power domain.<br>If unused, keep these pins open. |
| MAIN_RXD | 34 | DI | Main UART receive | | |
| MAIN_TXD | 35 | DO | Main UART transmit | $V_{OL}$max = 0.36 V<br>$V_{OH}$min = 1.44 V | |
| MAIN_CTS | 36 | DO | DTE clear to send signal from DCE (Connect to DTE's CTS) | | |
| MAIN_RTS | 37 | DI | DTE request to send signal from DCE (Connect to DTE's RTS) | $V_{IL}$min = -0.2 V<br>$V_{IL}$max = 0.54 V<br>$V_{IH}$min = 1.26 V<br>$V_{IH}$max = 2.0 V | |
| MAIN_DCD | 38 | DO | Main UART data carrier detect | $V_{OL}$max = 0.36 V<br>$V_{OH}$min = 1.44 V | |
| MAIN_RI | 39 | DO | Main UART ring indication | | |
| **Debug UART Interface** | | | | | |
| **Pin Name** | **Pin No.** | **I/O** | **Description** | **DC Characteristics** | **Comment** |
| DBG_RXD | 22 | DI | Debug UART receive | $V_{IL}$min = -0.2 V<br>$V_{IL}$max = 0.54 V<br>$V_{IH}$min = 1.26 V<br>$V_{IH}$max = 2.0 V | 1.8 V power domain.<br>If unused, keep these pins open. |
| DBG_TXD | 23 | DO | Debug UART transmit | $V_{OL}$max = 0.36 V<br>$V_{OH}$min = 1.44 V | |
| **Antenna Interfaces** | | | | | |
| **Pin Name** | **Pin No.** | **I/O** | **Description** | **DC Characteristics** | **Comment** |
| ANT_MAIN | 60 | AIO | Main antenna interface | - | 50 Ω impedance |

| | | | | | |
|---|---|---|---|---|---|
| ANT_GNSS | 49 | AI | GNSS antenna interface | | 50 Ω impedance.<br>If unused, keep this pin open. |
| **GPIO Interfaces** | | | | | |
| **Pin Name** | **Pin No.** | **I/O** | **Description** | **DC Characteristics** | **Comment** |
| GPIO1 | 25 | DIO | General-purpose input/output | $V_{OL}$max = 0.36 V<br>$V_{OH}$min = 1.44 V<br>$V_{IL}$min = -0.2 V<br>$V_{IL}$max = 0.54 V<br>$V_{IH}$min = 1.26 V<br>$V_{IH}$max = 2.0 V | 1.8 V power domain.<br>If unused, keep these pins open. |
| GPIO2 | 26 | DIO | | | |
| GPIO3 | 64 | DIO | | | |
| GPIO4 | 65 | DIO | | | |
| GPIO5 | 66 | DIO | | | |
| GPIO6 | 85 | DIO | | | |
| GPIO7 | 86 | DIO | | | |
| GPIO8 | 87 | DIO | | | |
| GPIO9 | 88 | DIO | | | |
| **ADC Interfaces** | | | | | |
| **Pin Name** | **Pin No.** | **I/O** | **Description** | **DC Characteristics** | **Comment** |
| ADC0 | 24 | AI | General-purpose ADC interface | 0–1.8 V | If unused, keep these pins open. |
| ADC1 | 2 | AI | General-purpose ADC interface | 0–1.8 V | |
| **Other Interfaces** | | | | | |
| **Pin Name** | **Pin No.** | **I/O** | **Description** | **DC Characteristics** | **Comment** |
| W_DISABLE# | 18 | DI | Airplane mode control | $V_{IL}$min = -0.2 V<br>$V_{IL}$max = 0.54 V<br>$V_{IH}$min = 1.26 V<br>$V_{IH}$max = 2.0 V | 1.8 V power domain.<br>Pulled up by default.<br>When this pin is at a low level, the module can enter airplane mode.<br>If unused, keep this pin open. |

| | | | | | |
|---|---|---|---|---|---|
| AP_READY | 19 | DI | Application processor sleep state detect | $V_{IL}$min = -0.2 V<br>$V_{IL}$max = 0.54 V<br>$V_{IH}$min = 1.26 V<br>$V_{IH}$max = 2.0 V | 1.8 V power domain.<br>If unused, keep this pin open. |
| PON_TRIG | 96 | DI | Used for main UART function control and for entering/exiting e-I-DRX, PSM, sleep or power off modes | $V_{IL}$min = -0.2 V<br>$V_{IL}$max = 0.3 V<br>$V_{IH}$min = 1 V<br>$V_{IH}$max = 1.98 V | 1.8 V power domain.<br>Pulled down by default. |
| **GRFC Interface** | | | | | |
| **Pin Name** | **Pin No.** | **I/O** | **Description** | **DC Characteristics** | **Comment** |
| GRFC1 | 83 | DO | Generic RF controller | $V_{OL}$max = 0.36 V<br>$V_{OH}$min = 1.44 V<br>$V_{OH}$max = 2.0 V | 1.8 V power domain.<br>If unused, keep these pins open. |
| GRFC2 | 84 | DO | Generic RF controller | | |
| **External GNSS LNA Interface** [5] | | | | | |
| **Pin Name** | **Pin No.** | **I/O** | **Description** | **DC Characteristics** | **Comment** |
| GNSS_LNA_EN | 51 | DO | External GNSS LNA enable | $V_{OL}$max = 0.38 V<br>$V_{OH}$min = 1.36 V | 1.8 V power domain.<br>If unused, keep this pin open. |
| VDD_RF | 99 | PO | Can be used for external GNSS LNA power supply | Vnom = 1.9 V<br>$I_O$max = 50 mA | If unused, keep this pin open. |
| **RESERVED Pins** | | | | | |
| **Pin Name** | **Pin No.** | | | | **Comment** |
| RESERVED | 4–7, 11–14, 16, 40, 41, 56, 57, 63, 77, 78, 92, 93 | | | | Keep these pins open. |
| **GND Pins** | | | | | |
| **Pin Name** | **Pin No.** | | | | **Comment** |
| GND | 3, 31, 48, 50, 54, 55, 58, 59, 61, 62, 67–74, 79–82, 89–91, 100–102 | | | | |

[5] The LNA is integrated inside the module. It is not recommended to use an external LNA. It is strongly recommended to keep GNSS_LNA_EN (pin 51) and VDD_RF (pin 99) unconnected.

**Table 7: Pin Definition – Pins with Different Functions on BG95xA-GL**

| Pin No. | BG950A-GL/BG953A-GL | | BG951A-GL | | BG955A-GL | | I/O | DC Characteristics | Comment |
|---|---|---|---|---|---|---|---|---|---|
| | Pin Name | Pin Description | Pin Name | Pin Description | Pin Name | Pin Description | | | |
| 32 | VBAT_BB | Power supply for the module's baseband part | VBAT_BB | Power supply for the module's baseband part | VBAT_BB | Power supply for the module's baseband part | PI | **BG950A-GL/BG953A-GL:**<br>Vmax = 4.35 V<br>Vmin = 2.2 V<br>Vnom = 3.3 V<br>**BG955A-GL:**<br>Vmax = 4.3 V<br>Vmin = 3.3 V<br>Vnom = 3.8 V | |
| 33 | VBAT_RF | Power supply for the module's RF part | VBAT_RF | Power supply for the module's RF part | | | | | |
| 52 | RESERVED | Reserved | RESERVED | Reserved | VBAT_RF | Power supply for the module's RF part | | | |
| 53 | RESERVED | Reserved | RESERVED | Reserved | | | | | |
| 94 | CLI_RXD2 | CLI UART2 receive | CLI_RXD | CLI UART receive | CLI_RXD2 | CLI UART2 receive | DI | $V_{IL}$min = -0.2 V<br>$V_{IL}$max = 0.54 V<br>$V_{IH}$min = 1.26 V<br>$V_{IH}$max = 2.0 V | 1.8 V power domain.<br>If unused, keep these pins open. |
| 95 | CLI_TXD2 | CLI UART2 transmit | CLI_TXD | CLI UART transmit | CLI_TXD2 | CLI UART2 transmit | DO | $V_{OL}$max = 0.36 V<br>$V_{OH}$min = 1.44 V | |
| 27 | CLI_TXD1 | CLI UART1 transmit | GNSS_TXD | GNSS UART transmit | CLI_TXD1 | CLI UART1 transmit | DO | | |
| 28 | CLI_RXD1 | CLI UART1 receive | GNSS_RXD | GNSS UART receive | CLI_RXD1 | CLI UART1 receive | DI | | |
| 75 | RESERVED | Reserved | GNSS_BOOT | Force the GNSS chip of the module into emergency download mode | RESERVED | Reserved | DI | $V_{IL}$min = -0.2 V<br>$V_{IL}$max = 0.54 V<br>$V_{IH}$min = 1.26 V<br>$V_{IH}$max = 2.0 V | |
| 76 | RESERVED | Reserved | GNSS_NRST | Reset the GNSS chip;<br>Active high | RESERVED | Reserved | DI | | |
| 97 | RESERVED | Reserved | GNSS_EN | Enable internal GNSS chip | RESERVED | Reserved | DI | | |
| 98 | RESERVED | Reserved | SFNIND_1PPS | One pulse per second | RESERVED | Reserved | DO | $V_{OL}$max = 0.36 V<br>$V_{OH}$min = 1.44 V | Synchronized at the rising edge.<br>Pulse width: 100 ms.<br>If unused, keep it open. |

**NOTE**

1. For BG950A-GL/BG951A-GL/BG953A-GL, when the module starts up normally, to ensure full functionality, the minimum supply voltage should be higher than 2.2 V. While for BG955A-GL, the minimum supply voltage should be higher than 3.3 V. For every VBAT transition/re-insertion from 0 V, VBAT slew rate < 25 mV/μs. To ensure normal module startup, pulling down PWRKEY to turn on the module after VBAT remains stable for 100 ms.
2. After entering PSM or power off mode, it is prohibited to provide any external voltage to the module's I/O ports that are not defined as a wake-up source.
3. Keep all RESERVED pins and unused pins unconnected.

## 2.6. EVB Kit

To help you develop applications with the module, Quectel supplies an evaluation board (UMTS&LTE EVB) with accessories to control or test the module. For more details, see ***document [1]***.

# 3 Operating Characteristics

## 3.1. Operating Modes

The table below outlines operating modes of the module.

**Table 8: Operating Mode Overview**

| Mode | Details | |
|---|---|---|
| Normal Operation | Idle | The module remains registered on the network and is ready to send and receive data. In this mode, the software is active. |
| | Connected | The module is connected to the network. Its current consumption varies with the network setting and data transfer rate. |
| Extended Idle Mode DRX (e-I-DRX) | The module and network may negotiate over non-access stratum signaling the use of e-I-DRX for reducing power consumption while being available for mobile terminated data and/or network originated procedures within a certain delay dependent on the DRX cycle value. | |
| Airplane Mode | **AT+CFUN=4** or W_DISABLE# pin can set the module to airplane mode where the RF function is invalid. | |
| Minimum Functionality | **AT+CFUN=0** can set the module to minimum functionality without removing the power supply. In this mode, both RF function and (U)SIM card are invalid. | |
| Sleep Mode | The module retains the ability to receive paging messages, SMS and TCP/UDP data from the network normally. In this mode, the current consumption is reduced to a low level. | |
| Power OFF Mode | The module's power supply is shut down by its power management unit. The software is inactive, the serial interfaces are inaccessible, while the operating voltage of VBAT_BB/RF is still maintained. | |
| Power Saving Mode (PSM) | PSM is similar to power-off, but the module remains registered on the network and there is no need to re-attach or re-establish PDN connections. The current consumption is minimized. | |
| Recovery Mode | The module can burn firmware with an empty serial flash, or recover from firmware malfunction. For more details, see ***Chapter 3.6***. | |

**NOTE**

In e-I-DRX mode, it is recommended to use the main UART interface for data communication, as the use of USB interface will increase power consumption.

## 3.2. Airplane Mode

When the module enters airplane mode, the RF function will be disabled, and all AT commands correlative with RF function will be inaccessible. This mode can be set as follows:

**Hardware:**

W_DISABLE# is pulled up by default. Driving it low will make the module enter airplane mode.

**Software:**

**AT+CFUN=<fun>** provides functionality level choices by setting **<fun>** to 0, 1 or 4.

- **AT+CFUN=0:** Minimum functionality. Both RF and (U)SIM functions are disabled.
- **AT+CFUN=1:** Full functionality (default).
- **AT+CFUN=4:** Airplane mode (RF function is disabled).

**NOTE**

1. Airplane mode control via W_DISABLE# is disabled in firmware by default. It can be enabled with **AT+QCFG="airplanecontrol"**. For more details of the command, see ***document [2].***
2. On BG950A-GL/BG953A-GL/BG955A-GL, the execution of **AT+CFUN** will affect the GNSS function. Since the module does not support concurrent operation of LTE and GNSS, the GNSS function can be used when **<fun>**=0 or 4, but cannot be used when **<fun>**=1.
3. On BG951A-GL, the execution of **AT+CFUN** will not affect the GNSS function.

## 3.3. Power Saving Mode (PSM)

The module minimizes its power consumption by entering PSM. The mode is similar to power-off, but the module remains registered on the network and there is no need to re-attach or re-establish PDN connections. Therefore, in PSM the module cannot immediately respond to user requests.

When the module wants to use PSM, it shall request an Active Time value during every Attach and TAU procedure. If the network supports PSM use, it will allocate an Active Time value to the module to confirm

PSM use. If the module wants to change the Active Time value, the module consequently requests the value it wants in the TAU procedure.

If PSM is supported by the network, then it can be enabled via **AT+QPSMS**. In this case, driving PON_TRIG low will set the module to PSM.

Any of the following methods can wake up the module from PSM:

- Driving PON_TRIG high and keeping it high, will wake up the module from PSM.
- When the TAU timer expires, the module wakes up from PSM automatically. In this case, the main UART interface is inaccessible until PON_TRIG is pulled up.
- Driving PWRKEY low to wake up the module from PSM. In this case, the main UART interface is inaccessible until PON_TRIG is pulled up.

**NOTE**

1. PON_TRIG is pulled down by default.
2. PON_TRIG must be pulled up after executing any PSM wake-up event, otherwise the main UART will be inaccessible. In any case, the main UART interface is inaccessible until PON_TRIG is pulled up.
3. See ***document [3]*** for details about **AT+QPSMS**.

## 3.4. Extended Idle Mode DRX (e-I-DRX)

The module (UE) and the network may negotiate over non-access stratum signalling the use of e-I-DRX for reducing its power consumption, while being available for mobile terminating data and/or network originated procedures within a certain delay dependent on the DRX cycle value.

Applications that want to use e-I-DRX need to consider specific handling of mobile terminating services or data transfers, and in particular, they need to consider the delay tolerance of mobile terminated data.

In order to negotiate the use of e-I-DRX, the UE requests e-I-DRX parameters during attach procedure and RAU/TAU procedure. The EPC may reject or accept the UE request for enabling e-I-DRX. In case the EPC accepts e-I-DRX, the EPC based on operator policies and, if available, the e-I-DRX cycle length value in the subscription data from the HSS, may also provide different values of the e-I-DRX parameters than what was requested by the UE. If the EPC accepts the use of e-I-DRX, the UE applies e-I-DRX based on the received e-I-DRX parameters. If the UE does not receive e-I-DRX parameters in the relevant accept message because the EPC rejected its request or because the request was received by EPC not supporting e-I-DRX, the UE shall apply its regular discontinuous reception.

### 3.4.1. e-I-DRX Sleep Mode

If e-I-DRX is supported by the network, perform the steps below in sequence to make the module enter e-I-DRX sleep mode, in which case the main UART interface is inaccessible.

1. Send **AT+QPSMS=0** to disable the use of PSM.
2. Send **AT+CEDRXS=1** to enable the use of e-I-DRX.
3. Send **AT+QSCLK=2** to enable sleep mode.
4. Drive MAIN_DTR high.
5. Drive PON_TRIG low.

To make the module exit e-I-DRX sleep mode, perform the steps below in sequence.

1. Drive PON_TRIG high.
2. Drive MAIN_DTR low.
3. Send **AT+QSCLK=0** to disable sleep mode.
4. Send **AT+CEDRXS=0** to disable the use of e-I-DRX mode.
5. Send **AT+QPSMS=0** to enable the use of PSM (optional).

### 3.4.2. e-I-DRX Idle Mode

If e-I-DRX is supported by the network, just send **AT+CEDRXS=1** to make the module enter e-I-DRX idle mode, or send **AT+CEDRXS=0** to make the module exit e-I-DRX idle mode.

**NOTE**

See ***document [3]*** for details about the above AT commands.

## 3.5. Sleep Mode

The module can reduce its power consumption during the sleep mode. Power saving procedures and sleep mode are outlined in the following sub-sections.

### 3.5.1. UART Application Scenario

If the host communicates with the module via the main UART interface, perform the steps below in sequence to make the module enter the sleep mode, in which case the main UART interface is not accessible.

1. Send **AT+CFUN=0** to set the module to minimum functionality [6].
2. Drive MAIN_DTR low.
3. Execute **AT+QSCLK=2** to enable sleep mode.
4. Drive MAIN_DTR high.
5. Drive PON_TRIG low.

When the module is in sleep mode, perform the steps below in sequence to make the module exit sleep mode.

1. Drive PON_TRIG high.
2. Drive MAIN_DTR low.
3. Execute **AT+QSCLK=0** to disable sleep mode.
4. Send **AT+CFUN=1** to set the module to full functionality [6].
5. Drive MAIN_DTR high.

The figure illustrates the connection between the module and the host.

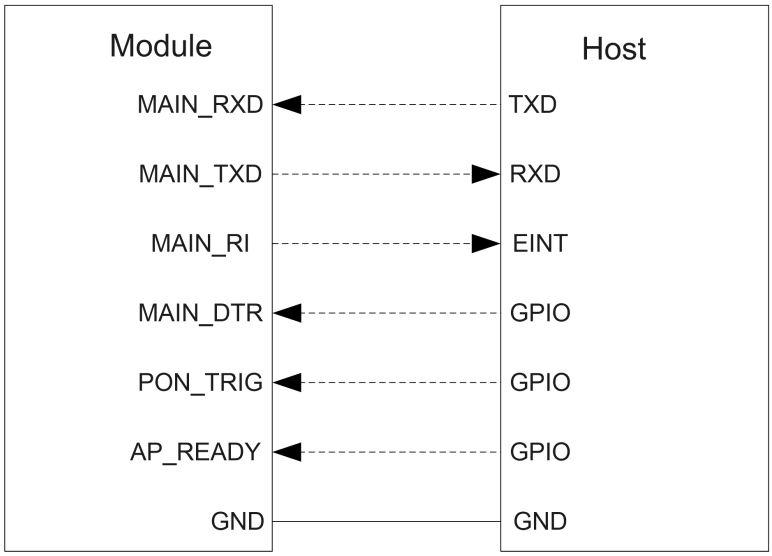


**Figure 8: Sleep Mode Application via UART Interface**

- When the module has a URC to report, MAIN_RI will wake up the host. See ***Chapter 4.5.4*** for details about MAIN_RI behavior.
- After the module is turned on, MAIN_DTR is internally pulled up by default.
- AP_READY will detect the sleep state of the host (it can be configured to detect high or low voltage level). See **AT+QCFG="apready"** in ***document [2]*** for details.

[6] After setting the module to minimum functionality with **AT+CFUN=0**, you can test the lowest power consumption of the module after the module enters sleep mode. If you need to keep the RF function on after the module enters sleep mode, there is no need to send any **AT+CFUN**.

## 3.6. Recovery Mode

The module features the recovery mode for firmware upgrade in emergency cases. Recovery mode can force the baseband chip of the module to upgrade firmware via the CLI UART interface(s) [7].

The following preconditions can set the module to recovery mode.

1. Short-circuit CLI_TXD & CLI_RXD on BG951A-GL, or CLI_TXD2 & CLI_RXD2 on BG950A-GL/ BG953A-GL/BG955A-GL.
2. Drive PWRKEY low to turn on the module. In this case the module will enter recovery mode.
3. After the module enters recovery mode, disconnect CLI_TXD & CLI_RXD, or CLI_TXD2 & CLI_RXD2.
4. Upgrade firmware via the CLI UART interface(s) [7].

**NOTE**

1. In recovery mode, pin 25 functions as CLI_RTS and pin 26 functions as CLI_CTS, while in other modes they are GPIO pins.
2. Since the baud rate of the UART interface required to download firmware to the baseband chip is 3 Mbps, the flow control pins of the CLI UART interface need to be reserved. Otherwise, you can only download with a 921600 baud rate, which is very slow. It is recommended to reserve the test points of the CLI UART interface, including pin 25, pin 26, pin 94 and pin 95, and keep pin 94 close to pin 95.
3. Ensure that VBAT remains stable for at least 100 ms before pulling down PWRKEY.

## 3.7. Power Supply

### 3.7.1. Power Supply Pins

The module has two VBAT pins for connection with an external power supply.

- One VBAT_RF pin for RF part.
- One VBAT_BB pin for baseband part.

**Table 9: Power Supply Pin Definition of BG950A-GL/BG951A-GL/BG953A-GL**

| Pin Name | Pin No. | Description | Min. | Typ. | Max. | Unit |
|---|---|---|---|---|---|---|

[7] On BG950A-GL, BG953A-GL and BG955A-GL, it is recommended to use CLI UART2 for firmware upgrade in recovery mode. CLI UART1 is not recommended to be used in this case.

| | | | | | | |
|---|---|---|---|---|---|---|
| VBAT_BB | 32 | Power supply for the module's baseband part | 2.2 | 3.3 | 4.35 | V |
| VBAT_RF | 33 | Power supply for the module's RF part | 2.2 | 3.3 | 4.35 | V |
| GND | 3, 31, 48, 50, 54, 55, 58, 59, 61, 62, 67–74, 79–82, 89–91, 100–102 | | - | - | - | - |

**Table 10: Power Supply Pin Definition of BG955A-GL**

| Pin Name | Pin No. | Description | Min. | Typ. | Max. | Unit |
|---|---|---|---|---|---|---|
| VBAT_BB | 32<br>33 | Power supply for the module's baseband part | 3.3 | 3.8 | 4.3 | V |
| VBAT_RF | 52<br>53 | Power supply for the module's RF part | 3.3 | 3.8 | 4.3 | V |
| GND | 3, 31, 48, 50, 54, 55, 58, 59, 61, 62, 67–74, 79–82, 89–91, 100–102 | | - | - | - | - |

**NOTE**

For BG950A-GL/BG951A-GL/BG953A-GL, when the module starts up normally, to ensure full functionality, the minimum supply voltage should be higher than 2.2 V. While for BG955A-GL, the minimum supply voltage should be higher than 3.3 V. For every VBAT transition/re-insertion from 0 V, VBAT slew rate < 25 mV/μs.

### 3.7.2. Voltage Stability Requirements

The power supply range of the BG950A-GL/BG951A-GL/BG953A-GL module is from 2.2 V to 4.35 V. Make sure that the input voltage never drops below 2.2 V. The power supply range of the BG955A-GL module is from 3.3 V to 4.3 V. Make sure that the input voltage never drops below 3.3 V.

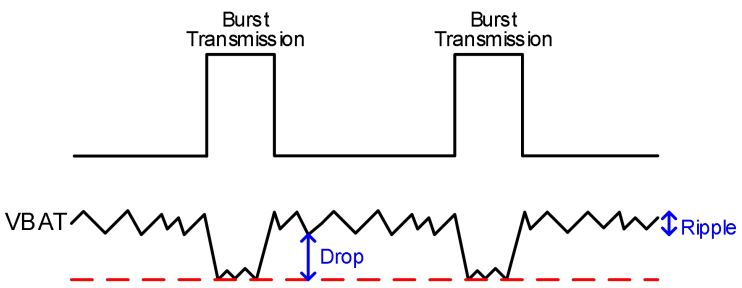


**Figure 9: Power Supply Limits During Burst Transmission**

To decrease voltage drop, one bypass capacitor of about 100 μF with low ESR and one multi-layer ceramic chip (MLCC) capacitor array for its ultra-low ESR should be used for VBAT_BB & RF respectively. It is recommended to use three ceramic capacitors for composing the MLCC array (100 nF, 33 pF, 10 pF), and place these capacitors close to VBAT pins. The main power supply from an external application must be a single voltage source that can supply power along two star-structured sub paths. The width of VBAT_BB or VBAT_RF trace should be at least 1 mm. In principle, the longer the VBAT trace is, the wider it should be.

In addition, to ensure power supply stability, it is necessary to add two high-power TVS components near VBAT_BB and VBAT_RF. The reference circuit of the power supply is shown below.

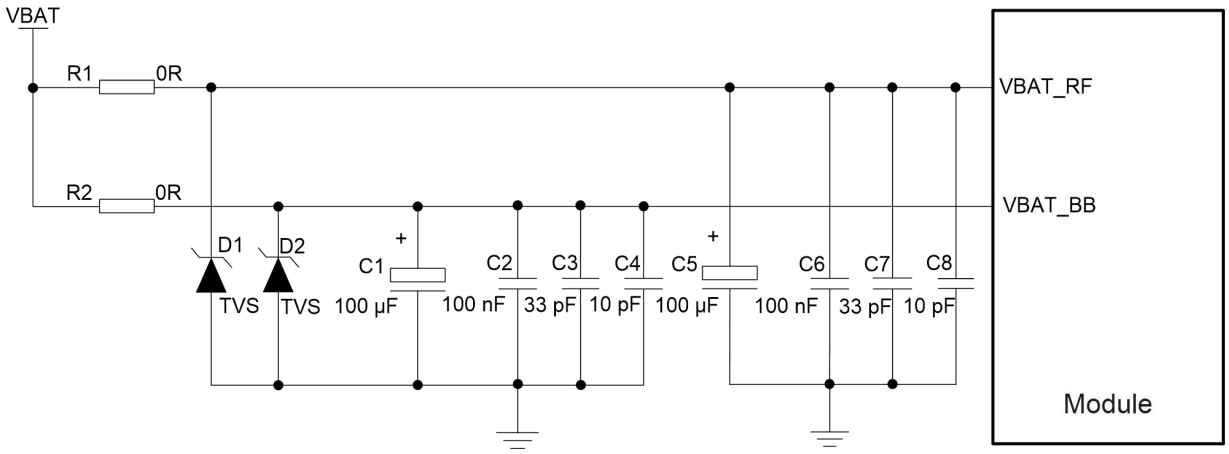


**Figure 10: Star Structure of Power Supply**

Power design for the module is critical to its performance. For BG950A-GL/BG951A-GL/BG953A-GL, the power supply of the module should be able to provide a sufficient current of at least 0.8 A, so it is recommended to select a DC-DC converter chip or an LDO chip with ultra-low leakage current and current output of at least 1.0 A for the power supply design. For BG955A-GL, the power supply design is to be confirmed.

### 3.7.3. Power Supply Monitoring

**AT+CBC** can be used to monitor the VBAT_BB voltage value. For more details, see ***document [3]***.

## 3.8. Turn On

### 3.8.1. Turn On with PWRKEY

**Table 11: PWRKEY Pin Definition**

| Pin Name | Pin No. | I/O | Description | Comment |
|---|---|---|---|---|
| PWRKEY | 15 | DI | Turn on/off the module | Internally pulled up with a 470 kΩ resistor. |

When the module is in power off mode, driving PWRKEY low for 500–1000 ms and then releasing it will turn on the module. It is recommended to use an open drain/collector driver to control PWRKEY.

A simple reference design is illustrated in the following figure.

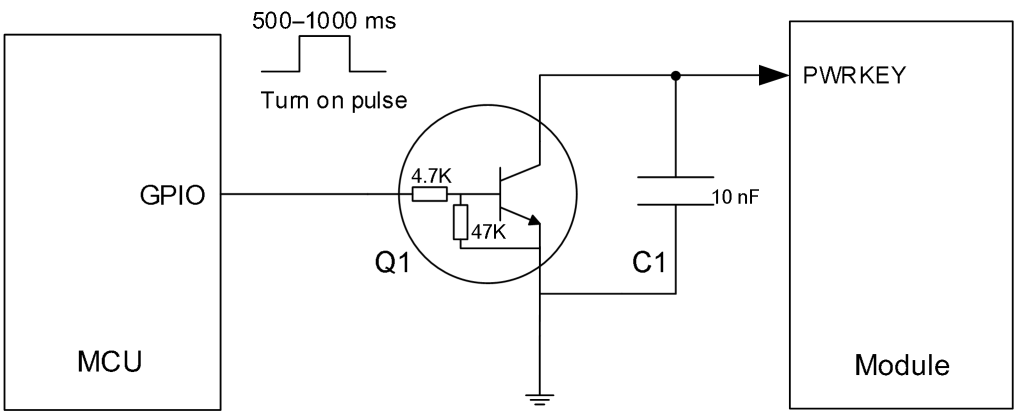


**Figure 11: Turn On Module With a Driving Circuit**

Another way to control PWRKEY is with a button. Pressing the button may result in a discharge of static electricity from a finger. Therefore, it is vital to place a TVS component near the button for ESD protection.

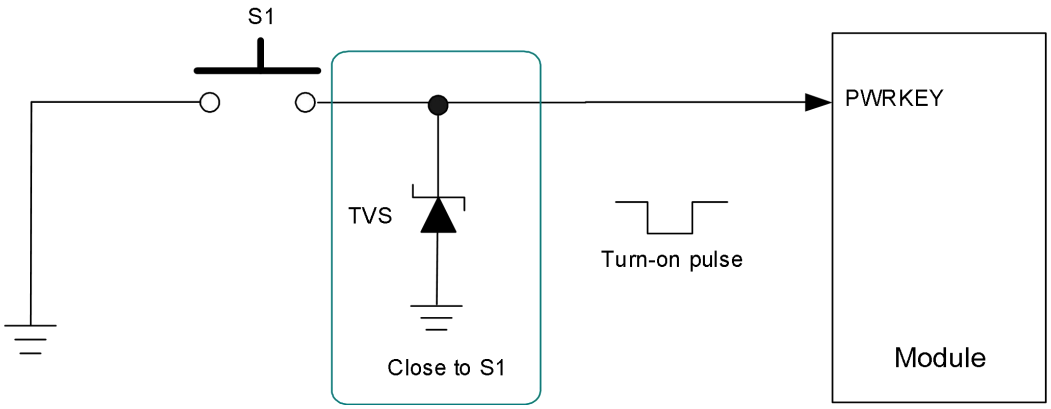


**Figure 12: Turn On Module With a Button**

Drive PON_TRIG high and then drive PWRKEY low after VBAT is stable for 100–200 ms, the module will be turned on immediately. The power-up timing is shown below.

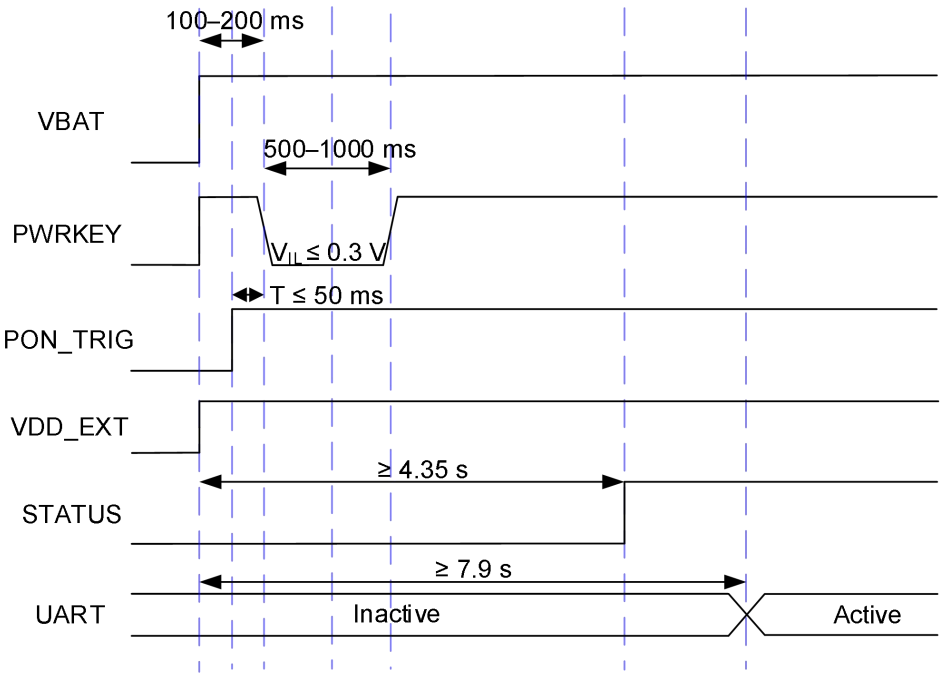


**Figure 13: Power-up Timing (After VBAT is Stable for 100–200 ms)**

**NOTE**

1. Ensure that VBAT is stable for 100–200 ms before pulling down PWRKEY.
2. Before you turn on the module by driving PWRKEY low for 500–1000 ms, drive PON_TRIG high, otherwise, the main UART interface will be inaccessible.

Drive PON_TRIG high and then drive PWRKEY low after VBAT is stable for more than 250 ms, the module will be turned on immediately. The power-up timing is shown below.

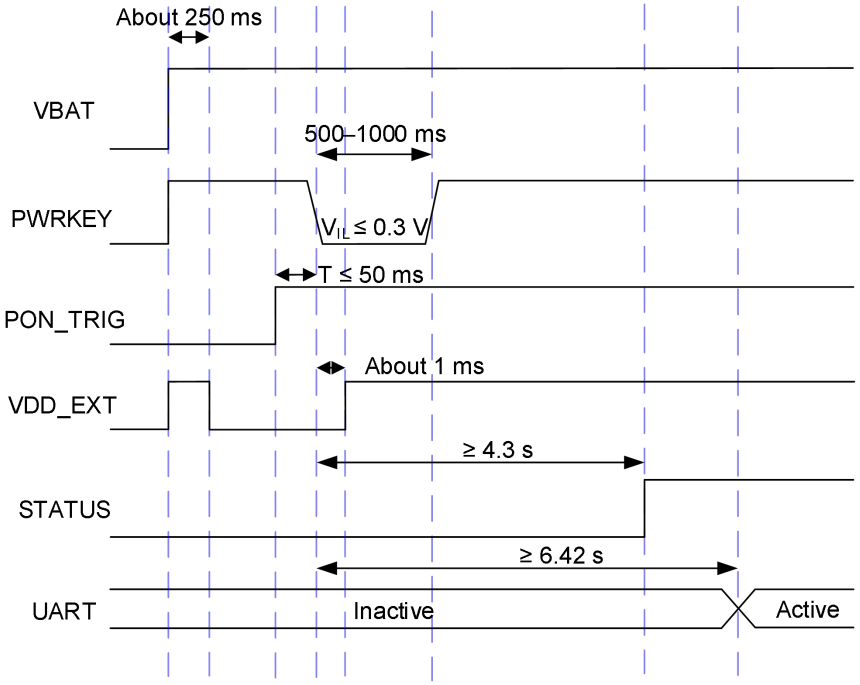


**Figure 14: Power-up Timing (After VBAT is Stable for more than 250 ms)**

**NOTE**

1. After VBAT is powered on, it will take about 250 ms for the module to load the internal program.
2. Before the module is turned on by driving PWRKEY low for 500–1000 ms, drive PON_TRIG high, otherwise, the main UART interface will be inaccessible.

After the module is turned off with the PWRKEY and PON_TRIG solution (see ***Chapter 3.9.1***) or the AT command and PON_TRIG solution (see ***Chapter 3.9.2***), VBAT will keep powered on all the time until the main power supply is disconnected. In this case, driving PON_TRIG high and then driving PWRKEY low will restart the module, and the restart timing is shown below.

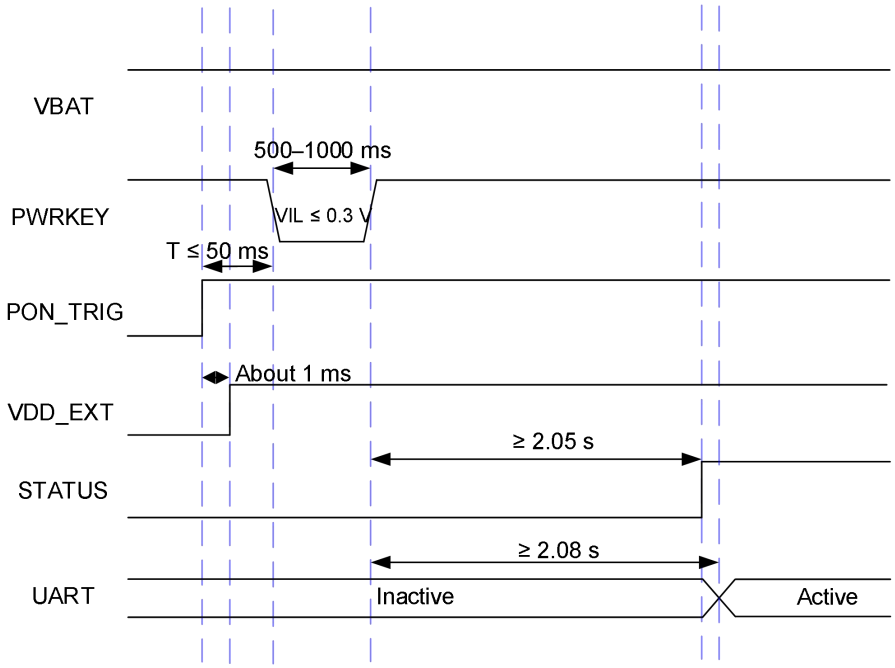


**Figure 15: Restart Timing**

## 3.9. Turn Off

After the module is turned off or enters PSM, do not pull up any I/O pin lest it cause additional power consumption and possibly damage pins on the module.

Either of the following methods can be used to turn off the module normally:

- Turn off the module via PWRKEY and PON_TRIG.
- Turn off the module via **AT+QPOWD** and PON_TRIG**.**

### 3.9.1. Turn Off with PWRKEY and PON_TRIG

When the module is powered on, drive PWRKEY low for 650–1500 ms before releasing it, and then pull down PON_TRIG within 200 ms, after which the module will execute the power-down procedure.

The power-down timing is illustrated in the following figure.

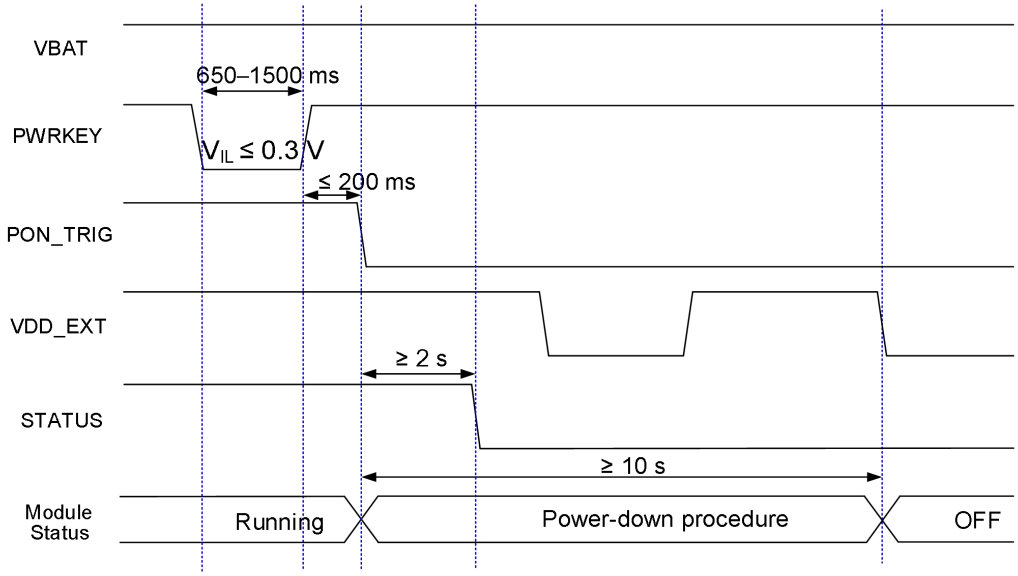


**Figure 16: Power-down Timing (PWRKEY & PON_TRIG)**

### 3.9.2. Turn Off with AT Command and PON_TRIG

Similar to PWRKEY, the module can be turned off safely with **AT+QPOWD**. After **AT+QPOWD** is sent, pull down PON_TRIG within 200 ms, and the module will execute the power-down procedure.

See ***document [3]*** for details about **AT+QPOWD**.

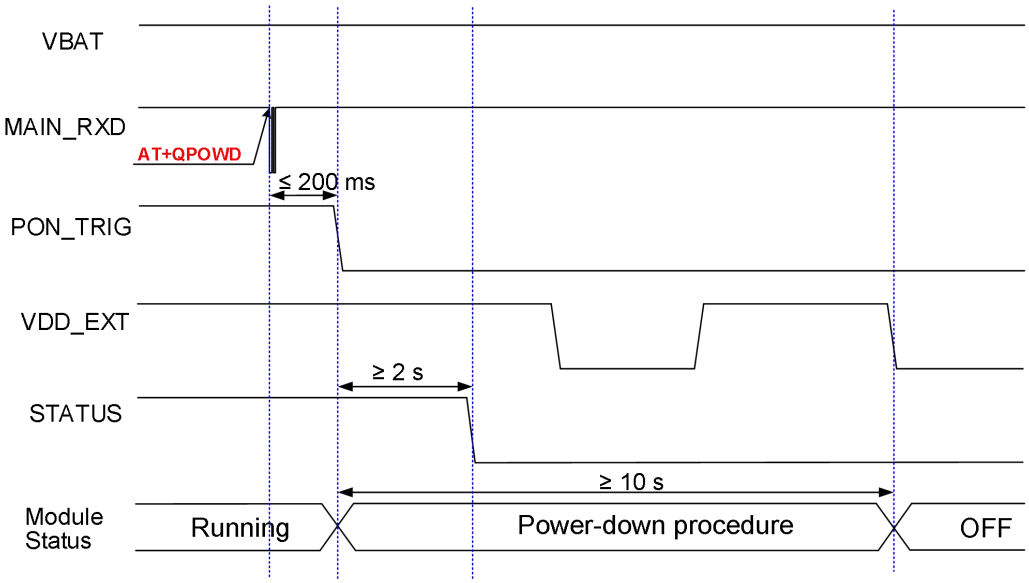


**Figure 17: Power-down Timing (AT Command & PON_TRIG)**

**NOTE**

1. To avoid internal flash data damage, do not switch off the power supply while the module is working normally. The power supply can be cut off only after the module is shut down with PWRKEY & PON_TRIG or AT command & PON_TRIG.
2. When turning off the module with AT command, keep PWRKEY at a high level after executing the power-off command. Otherwise, the module will be turned on again after turn-off.

## 3.10. Reset

The module can be reset by driving RESET_N low for at least 100 ms and then releasing it. The RESET_N signal is sensitive to interference, so it is recommended to route the trace as short as possible and surround it with ground.

**Table 12: RESET_N Pin Definition**

| Pin Name | Pin No. | I/O | Description |
|---|---|---|---|
| RESET_N | 17 | DI | Reset the module.<br>Internally pulled up with a 470 kΩ resistor. |

The recommended circuit is similar to the PWRKEY control circuit. An open drain/collector driver or a button can be used to control RESET_N.

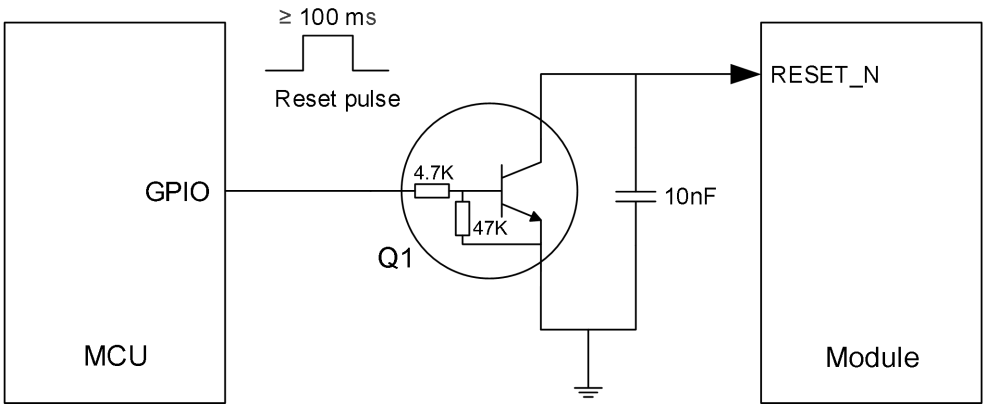


**Figure 18: Reference Circuit of RESET_N with a Driving Circuit**

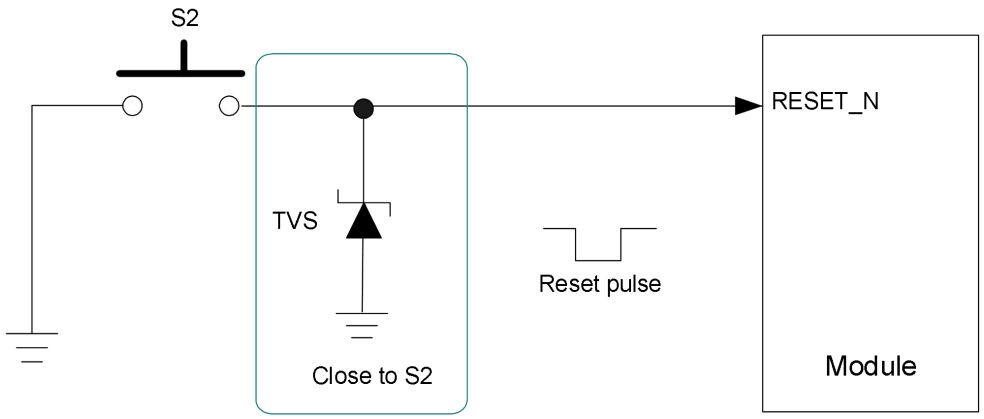


**Figure 19: Reference Circuit of RESET_N with a Button**

The reset timing is illustrated in the following figure.

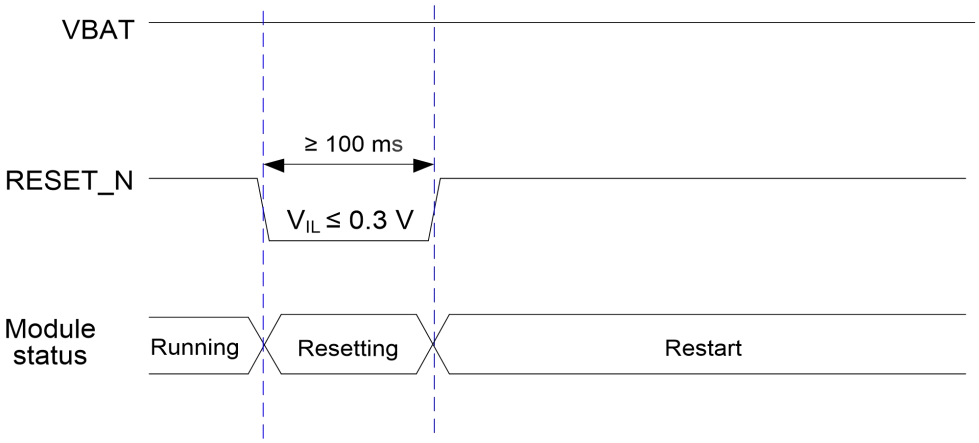


**Figure 20: Reset Timing**

**NOTE**

1. Ensure that there is no large capacitance on RESET_N pin.
2. Because PWRKEY and RESET traces are sensitive signal traces, it's necessary to surround the traces with ground on that layer and with ground planes above and below, and keep their traces away from each other, so as to reduce interference.

## 3.11. PON_TRIG

The module provides one PON_TRIG pin. Drive PON_TRIG high and keep it high to wake up the module from PSM. PON_TRIG is pulled down by default.

**Table 13: Pin Definition of PON_TRIG**

| Pin Name | Pin No. | I/O | Description | Comment |
|---|---|---|---|---|
| PON_TRIG | 96 | DI | Used for main UART function control and for entering/exiting e-I-DRX, PSM, sleep or power off mode. | 1.8 V power domain. Pulled down by default. |

PON_TRIG has the following functions:

- Makes the module enter or exit e-I-DRX, PSM, sleep or power off mode.
- Enables/disables the main UART interface communication function.
- Turns on/off the module.

PON_TRIG must be designed to allow for external control. A reference circuit is shown in the following figure.

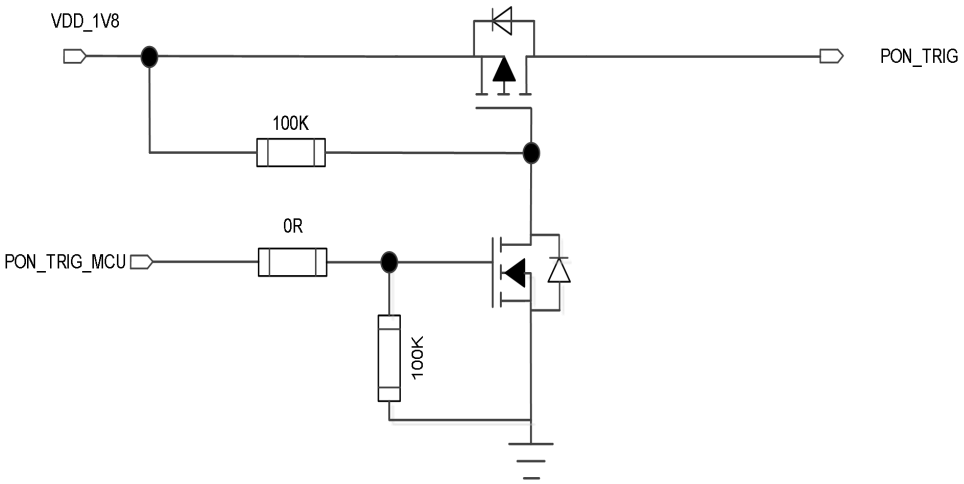


**Figure 21: PON_TRIG Reference Circuit 1**

In addition, a voltage divider circuit can be used to control PON_RIG. The voltage domain of the external host and the voltage divider resistor should be selected with care. A voltage divider circuit in the 3.3 V host voltage domain is shown in the following figure.

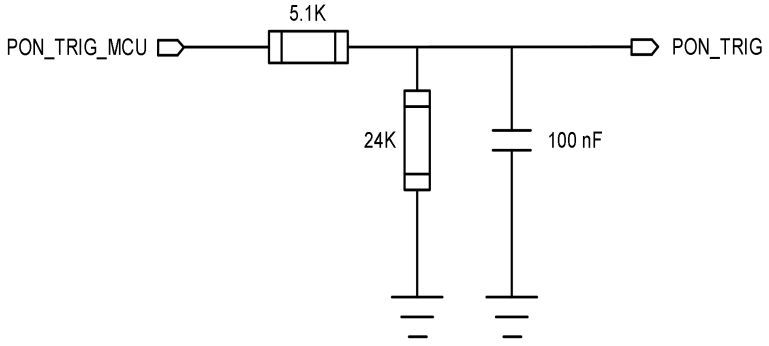


**Figure 22: PON_TRIG Reference Circuit 2**

**NOTE**

1. VDD_1V8 is provided by an external LDO.
2. If the host's voltage domain is not 3.3 V, the value of the voltage divider resistors should be tested according to your actual application.
3. Inside the module, PON_TRIG is connected in series with a diode and connected in parallel with a 10 kΩ pull-down resistor to the ground. Therefore, the actual voltage divider value needs to be measured.

The following is a brief description of PON_TRIG use.

- PON_TRIG is pulled down by default. Before the module is turned on, PON_TRIG must be pulled up. Otherwise, the main UART interface will be inaccessible.
- When the module is powered on, pull down PON_TRIG within 200 ms after sending **AT+QPOWED** or driving PWRKEY low, after which the module will execute the power-down procedure. For more details, see ***Chapter 3.9***.
- After sending **AT+QPSMS** to enable PSM, driving PON_TRIG low will set the module to PSM. Drive PON_TRIG high and keep it high, the module will wake up from PSM. In this case, PON_TRIG must remain high, otherwise the module will re-enter PSM.
- Pull down PON_TRIG and keep it low in e-I-DRX, PSM, sleep or power off mode. In other cases, pull up PON_TRIG and keep it high to make sure the main UART is accessible. For details about PON_TRIG use in e-I-DRX and sleep modes, see ***Chapter 3.4*** and ***Chapter 3.5*** respectively.

# 4 Application Interfaces

## 4.1. (U)SIM Interface

BG95xA-GL module supports 1.8 V (U)SIM card only. The circuitry of (U)SIM interfaces meet ETSI and IMT-2000 requirements.

BG953A-GL supports integrated iSIM. After enabling this function, you do not need to design the (U)SIM interface, which helps to improve the security of the device and reduce the PCB area. For more details about iSIM function, please contact with local network service providers.

**Table 14: (U)SIM Interface Pin Definition**

| Pin Name | Pin No. | I/O | Description | Comment |
|---|---|---|---|---|
| USIM_DET | 42 | DI | (U)SIM card hot-plug detect | 1.8 V power domain.<br>If unused, keep this pin open. |
| USIM_VDD | 43 | PO | (U)SIM card power supply | Only 1.8 V (U)SIM card is supported. |
| USIM_RST | 44 | DO | (U)SIM card reset | 1.8 V power domain. |
| USIM_DATA | 45 | DIO | (U)SIM card data | |
| USIM_CLK | 46 | DO | (U)SIM card clock | |
| USIM_GND | 47 | - | Specified ground for (U)SIM card | - |

BG95xA-GL module supports (U)SIM card hot-plug via USIM_DET, and both high-level and low-level detections are supported. The function is disabled by default. See **AT+QSIMDET** in ***document [3]*** for more details.

The following figure illustrates a reference design of (U)SIM interface with an 8-pin (U)SIM card connector.

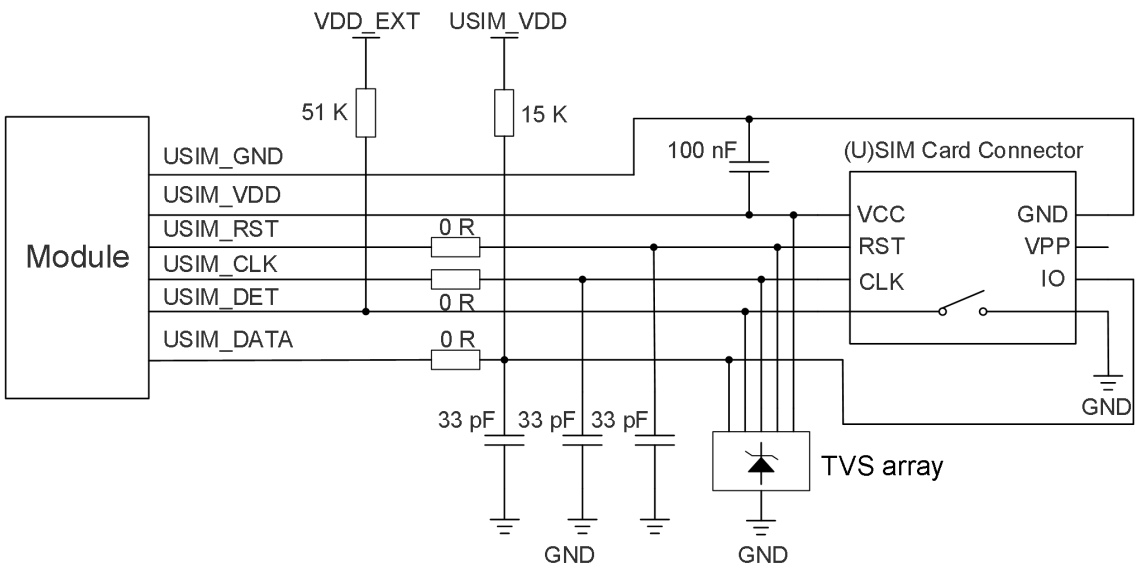


**Figure 23: Reference Circuit of (U)SIM Interface with an 8-Pin (U)SIM Card Connector**

If (U)SIM card detection function is not needed, keep USIM_DET unconnected. A reference circuit for (U)SIM interface with a 6-pin (U)SIM card connector is illustrated in the following figure.

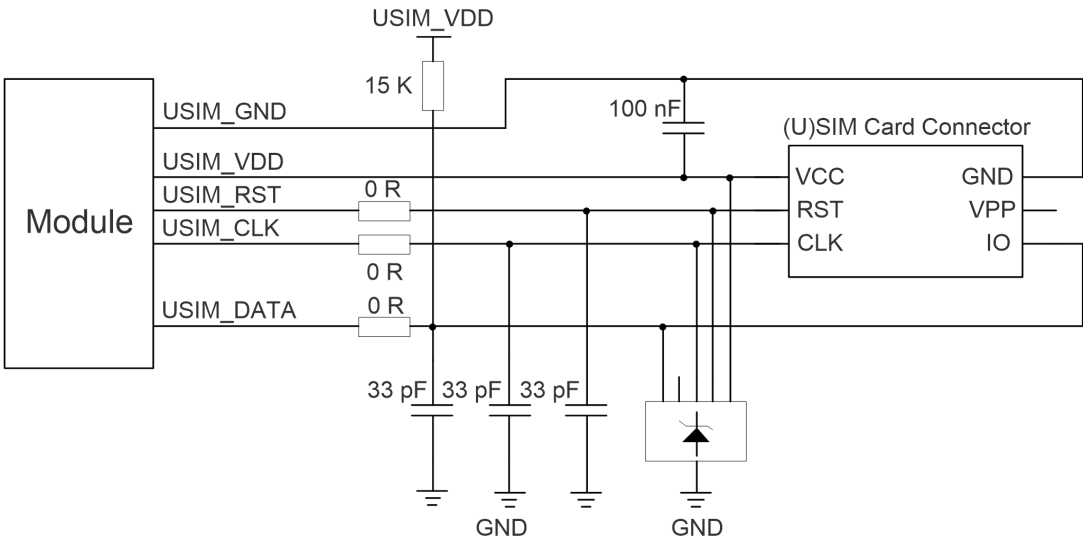


**Figure 24: Reference Circuit of (U)SIM Interface with a 6-Pin (U)SIM Card Connector**

To enhance the reliability and availability of the (U)SIM card in applications, follow the criteria below in the (U)SIM circuit design:

- Place the (U)SIM card connector as close as possible to the module with a trace shorter than 200 mm.
- Keep (U)SIM card signals away from RF and power supply traces.

- Ensure a short and wide ground trace between the module and the (U)SIM card connector. Keep the ground and USIM_VDD traces at least 0.5 mm wide to maintain the same electric potential. Make sure the bypass capacitor between USIM_VDD and USIM_GND is less than 1 μF, and place it as close to the (U)SIM card connector as possible. If the system ground plane is complete, USIM_GND can be directly connected to the system ground.
- To avoid cross-talk between USIM_DATA and USIM_CLK, keep their traces away from each other and shield them with ground. USIM_RST should also be shielded with ground.
- To offer good ESD protection, it is recommended to add a TVS diode array with parasitic capacitance not exceeding 15 pF. It is recommended to reserve 0 Ω series resistors for the (U)SIM signals of the module to facilitate debugging. The 33 pF capacitors are used for filtering interference of EGSM900. Note that the (U)SIM peripheral circuit should be close to the (U)SIM card connector.
- The pull-up resistor on USIM_DATA trace can improve anti-jamming capability, and should be placed close to the (U)SIM card connector.

## 4.2. USB Interface

The module features one integrated USB (Universal Serial Bus) interface that complies with the USB 2.0 specification and supports full speed mode only. This USB interface is used for AT command communication, data transmission, software debugging and firmware upgrade*.

The USB interface pin definition is presented in the following table.

**Table 15: USB Interface Pin Definition**

| Pin Name | Pin No. | I/O | Description | Comment |
|---|---|---|---|---|
| USB_VBUS | 8 | AI | USB connection detect | Typ. 5.0 V |
| USB_DP | 9 | AIO | USB differential data (+) | Compliant with the USB 2.0 standard specification.<br>Requires differential impedance of 90 Ω. |
| USB_DM | 10 | AIO | USB differential data (-) | |

It is recommended to reserve test points for debugging and firmware upgrading* in your designs.

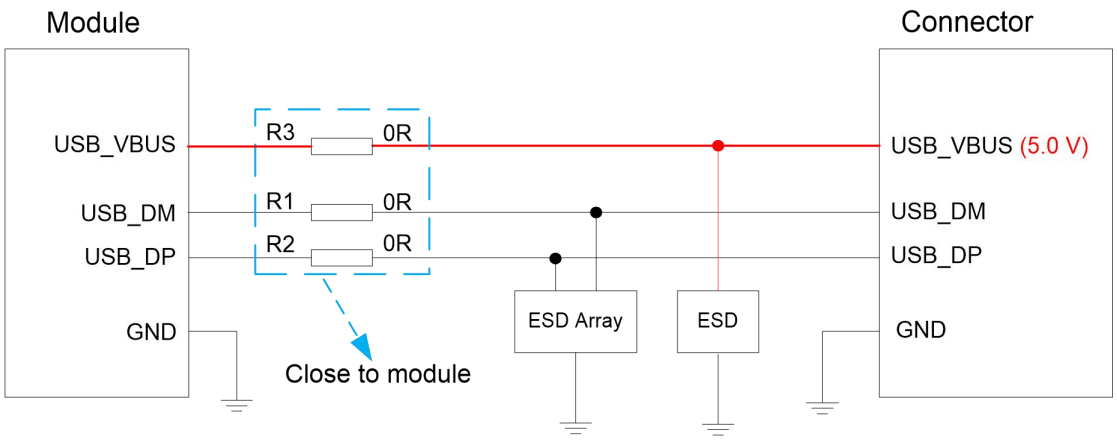


**Figure 25: Reference Circuit of USB Application**

To ensure USB data signal integrity, if possible, reserve a 0 Ω resistor on USB_DP and USB_DM traces, respectively. Resistors R1 and R2 should be placed close to the module and to each other. The extra trace stubs must be as short as possible.

To meet USB 2.0 specification, comply with the following principles in USB interface designing.

- It is important to route the USB signal traces as a differential pair with ground. The impedance of the USB differential trace is 90 Ω.
- Do not route signal traces under crystals, oscillators, magnetic devices, and RF signal traces. It is important to route the USB differential traces in inner layers of the PCB, and surround the traces with ground on that layer and with ground planes above and below.
- Junction capacitance of the ESD protection components might influence USB data traces, so pay attention to device selection. Typically, the stray capacitance should be less than 2 pF.
- Keep the ESD protection components as close to the USB connector as possible.
- If possible, reserve a 0 Ω resistor on USB_DP and USB_DM traces, respectively.

For more details about the USB specifications, visit http://www.usb.org/home.

**NOTE**

1. After the module is turned off or enters PSM, do not pull up any USB interface pin lest it cause additional power consumption and potentially damage pins on the module.
2. For more details about using the UMTS&LTE EVB board to test the USB interface function of the module, see ***document [7]***.

## 4.3. UART Interfaces

BG950A-GL, BG953A-GL and BG955A-GL module provides four UART interfaces: one main UART interface, one debug UART interface and two CLI UART interfaces. BG951A-GL module provides four UART interfaces: one main UART, one debug UART, one CLI UART and one GNSS UART interface.

- **Main UART:**
  It supports 9600, 19200, 38400, 57600, 115200, 230400, 460800, 921600 and 3000000 bps baud rates. The default baud rate is 115200 bps. It is used for AT command communication and data transmission, and supports RTS and CTS hardware flow control. The default frame format is 8N1 (8 data bits, no parity, 1 stop bit).

- **Debug UART:**
- It supports 921600 bps baud rate by default, and is used for RF calibration and log output, and supports RTS and CTS hardware flow control. The default frame format is 8N1 (8 data bits, no parity, 1 stop bit).

- **CLI UART [8]:**
  It supports 9600, 19200, 38400, 57600, 115200, 230400, 460800, 921600 and 3000000 bps baud rates. The default baud rate is 115200 bps. It is used for firmware upgrade, software debugging, log output, GNSS data and NMEA sentence output, and supports RTS and CTS hardware flow control. The default frame format is 8N1 (8 data bits, no parity, 1 stop bit).

- **GNSS UART (Only Supported by BG951A-GL):**
  The GNSS UART interface supports 115200 bps baud rate by default, and it is used for GNSS data, GNSS NMEA sentence output and GNSS firmware upgrade.

The following tables show the pin definition of four UART interfaces.

**Table 16: Main UART Interface Pin Definition**

| Pin Name | Pin No. | I/O | Description | Comment |
|---|---|---|---|---|
| MAIN_DTR | 30 | DI | Main UART data terminal ready | 1.8 V power domain. If unused, keep these pins open. |
| MAIN_RXD | 34 | DI | Main UART reception | |
| MAIN_TXD | 35 | DO | Main UART transmission | |

[8] BG951A-GL only supports one CLI UART interface, while BG950A-GL, BG953A-GL and BG955A-GL supports two CLI UART interfaces, more precisely, pin 27 (CLI_TXD1) and pin 28 (CLI_RXD1) are connected to pin 95 (CLI_TXD2) and pin 94 (CLI_RXD2) respectively inside the module.

| | | | |
|---|---|---|---|
| MAIN_CTS | 36 | DO | DTE clear to send signal from DCE (Connect to DTE's CTS) |
| MAIN_RTS | 37 | DI | DTE request to send signal from DCE (Connect to DTE's RTS) |
| MAIN_DCD | 38 | DO | Main UART data carrier detection |
| MAIN_RI | 39 | DO | Main UART ring indication |

**Table 17: Debug UART Interface Pin Definition**

| Pin Name | Pin No. | I/O | Description | Comment |
|---|---|---|---|---|
| DBG_TXD | 23 | DO | Debug UART transmission | 1.8 V power domain. If unused, keep them open. |
| DBG_RXD | 22 | DI | Debug UART reception | |

**Table 18: BG950A-GL & BG953A-GL & BG955A-GL CLI UART Interface Pin Definition**

| Pin Name | Pin No. | I/O | Description | Comment |
|---|---|---|---|---|
| CLI_TXD2 | 95 | DO | CLI UART2 transmission | 1.8 V power domain. If unused, keep them open. |
| CLI_RXD2 | 94 | DI | CLI UART2 reception | |
| CLI_TXD1 | 27 | DO | CLI UART1 transmission | 1.8 V power domain. If unused, keep them open. |
| CLI_RXD1 | 28 | DI | CLI UART1 reception | |

**Table 19: BG951A-GL CLI UART Interface Pin Definition**

| Pin Name | Pin No. | I/O | Description | Comment |
|---|---|---|---|---|
| CLI_TXD | 95 | DO | CLI UART transmission | 1.8 V power domain. If unused, keep them open. |
| CLI_RXD | 94 | DI | CLI UART reception | |

**Table 20: BG951A-GL GNSS UART Interface Pin Definition**

| Pin Name | Pin No. | I/O | Description | Comment |
|---|---|---|---|---|
| GNSS_TXD | 27 | DO | GNSS UART transmission | 1.8 V power domain. |

| | | | | |
|---|---|---|---|---|
| GNSS_RXD | 28 | DI | GNSS UART reception | If unused, keep them open. |

**NOTE**

**AT+IPR** can be used to set the baud rate of the main UART interface, and **AT+IFC** can be used to enable/disable the hardware flow control (the function is disabled by default). See ***document [3]*** for more details about these AT commands.

The module features 1.8 V UART interfaces. A level-shifting circuit should be used if your application has a 3.3 V UART interface. It is recommended to use a level-shifting chip without internal pull-up. The voltage-level translator TXB0108PWR manufactured by Texas Instruments is recommended.

The following figure shows a reference design of the main UART interface:

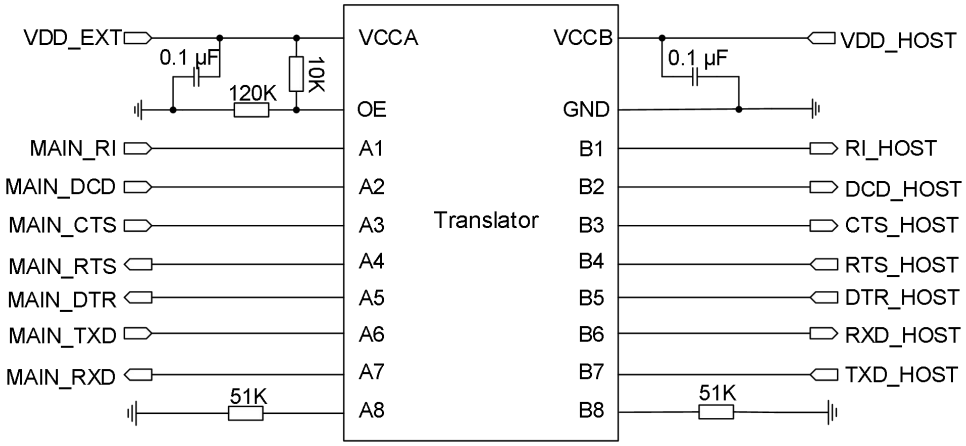


**Figure 26: Main UART Reference Design (Translator Chip)**

Visit http://www.ti.com for more information.

Another example with a transistor circuit is shown below. For the design of circuits shown in dotted lines, see that of circuits in solid lines, but pay attention to the direction of connection.

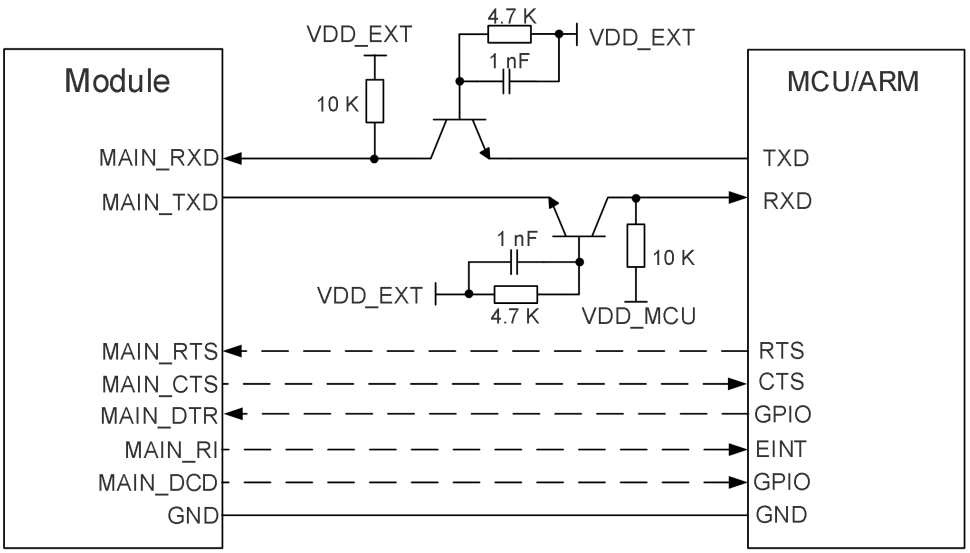


**Figure 27: Main UART Reference Design (Transistor Circuit)**

**NOTE**

1. Transistor circuit solution is not suitable for applications with high baud rates exceeding 460 kbps.
2. The main UART interface should be disconnected in PSM and power off modes lest it cause additional power consumption and potentially damage pins on the module.
3. It is recommended to use a level-shifting chip without internal pull-up, such as TXB0108PWR, for level shifting.
4. Please note that the module's CTS is connected to the host's CTS, and the module's RTS is connected to the host's RTS.

## 4.4. ADC Interfaces

The module provides two ADC (Analog-to-Digital Converter) interfaces. To improve the accuracy of ADC voltage values, the ADC traces should be surrounded with ground.

**Table 21: Pin Definition of ADC Interfaces**

| Pin Name | Pin No. | I/O | Description | Comment |
|---|---|---|---|---|
| ADC0 | 24 | AI | General-purpose ADC interface | Voltage range: 0–1.8 V |
| ADC1 | 2 | AI | General-purpose ADC interface | |

The voltage value on ADC pins can be read via **AT+QADC=<port>**:

- **AT+QADC=0:** read the voltage value on ADC0.
- **AT+QADC=1:** read the voltage value on ADC1.

For more details about the AT command, see ***document [3]***.

The resolution of the ADC interfaces is up to 12 bits. The following table describes the characteristic of the ADC interfaces.

**Table 22: Characteristics of ADC Interfaces**

| Name | Min. | Typ. | Max. | Unit |
|---|---|---|---|---|
| Voltage Range | 0 | - | 1.8 | V |
| Resolution | 6 | - | 12 | bit |

**NOTE**

1. ADC input voltage must not exceed 1.8 V.
2. It is prohibited to supply any voltage to the ADC pin when VBAT is removed.
3. It is recommended to use a resistor divider circuit for ADC application, and the divider's resistor accuracy should be no less than 1 %.
4. After the module is turned off or enters PSM, do not pull up any pin of ADC interfaces lest it cause additional power consumption and potentially damage pins on the module.

## 4.5. Indication Signals

### 4.5.1. PSM Status Indication

**Table 23: PSM_IND Pin Definition**

| Pin Name | Pin No. | I/O | Description | Comment |
|---|---|---|---|---|
| PSM_IND | 1 | DO | Indicate the module's power saving mode | 1.8 V power domain.<br>If unused, keep this pin open. |

When PSM is enabled, the function of PSM_IND will be activated after the module is rebooted. When PSM_IND is at a high level, the module is in a normal operation mode. When it is at a low level, the module is in PSM.

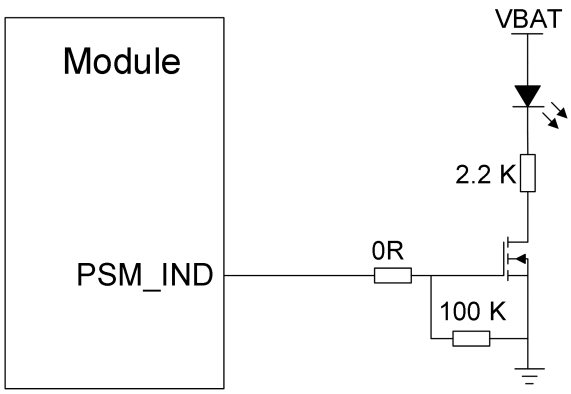


**Figure 28: Reference Circuit of PSM Status Indication**

### 4.5.2. Network Status Indication

**Table 24: Pin Definition of NET_STATUS**

| Pin Name | Pin No. | I/O | Description | Comment |
|---|---|---|---|---|
| NET_STATUS | 21 | DO | Indicate the module's network activity status | 1.8 V power domain.<br>If unused, keep this pin open. |

The network indication pin can be used to drive network status indication LEDs. The module features one network indication pin: NET_STATUS. The pin definition and logic level changes in different network status are outlined in the following table.

**Table 25: Working State of Network Connection Status Indication**

| Pin Name | Status | Description |
|---|---|---|
| NET_STATUS | Flicker slowly (200 ms High/1800 ms Low) | Network searching |
| | Flicker slowly (1800 ms High/200 ms Low) | Idle |
| | Flicker quickly (125 ms High/125 ms Low) | Data transfer is ongoing |

A reference circuit is shown in the following figure.

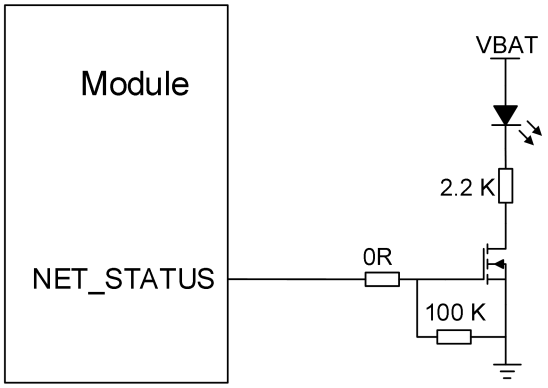


**Figure 29: Reference Circuit of Network Status Indication**

### 4.5.3. STATUS

The STATUS pin is an open-drain output for indicating the module's operation status. It will output a high level once the module is powered on successfully.

**Table 26: STATUS Pin Definition**

| Pin Name | Pin No. | I/O | Description | Comment |
|---|---|---|---|---|
| STATUS | 20 | DO | Indicate the module's operation status | 1.8 V power domain |

A reference circuit is shown below.

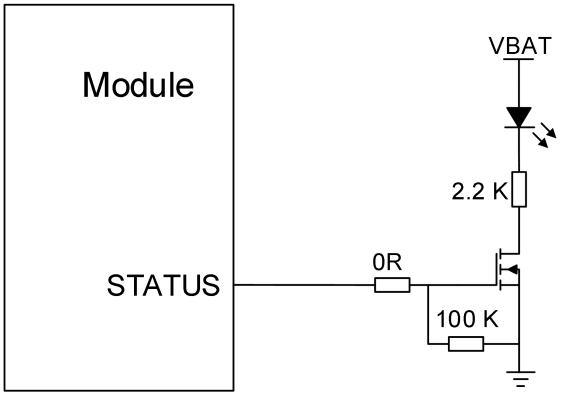


**Figure 30: Reference Circuit of STATUS**

### 4.5.4. MAIN_RI

**AT+QCFG= "risignaltype","physical"** can be used to configure MAIN_RI behavior. No matter on which port a URC is presented, the URC will trigger the behavior of MAIN_RI.

**Table 27: MAIN_RI Pin Definition**

| Pin Name | Pin No. | I/O | Description | Comment |
|---|---|---|---|---|
| MAIN_RI | 39 | DO | Main UART ring indication | 1.8 V power domain.<br>If unused, keep this pin open. |

The default MAIN_RI behaviors can be configured flexibly with **AT+QCFG="urc/ri/ring"**. See ***document [2]*** for details. The default behavior of the MAIN_RI is shown below.

**Table 28: MAIN_RI Default Behaviors**

| State | Response |
|---|---|
| Idle | MAIN_RI remains at a high level. |
| URC | MAIN_RI outputs a 120 ms low pulse when a new URC is returned. |

**NOTE**

A URC can be outputted from the main UART interface (default), the debug UART or EMUX ports by configuring URC indication option with **AT+QURCCFG**. See ***document [3]*** for details about **AT+QURCCFG**.

## 4.6. GRFC Interfaces

The module has two generic RF control interfaces for the control of external antenna tuners.

**Table 29: GRFC Interface Pin Definitions**

| Pin Name | Pin No. | I/O | Description | Comment |
|---|---|---|---|---|
| GRFC1 | 83 | DO | Generic RF controller | 1.8 V power domain.<br>If unused, keep them open. |
| GRFC2 | 84 | DO | Generic RF controller | |

**Table 30: GRFC Interface Truth Table**

| GRFC1 Level | GRFC2 Level | Frequency Range (MHz) |
|---|---|---|
| Low | Low | 880–2200 |
| Low | High | 791–879.9 |
| High | Low | 698–790.9 |

## 4.7. GPIO Interface

The module has nine general-purpose input and output (GPIO) interfaces. **AT+QCFG="gpio"** can be used to configure the status of GPIO pins. For more details about the AT command, see ***document [2].***

**Table 31: GPIO Interface Pin Definitions**

| Pin Name | Pin No. | I/O | Description | Comment |
|---|---|---|---|---|
| GPIO1 | 25 | DIO | General-purpose input/output | 1.8 V power domain. |
| GPIO2 | 26 | DIO | General-purpose input/output | |
| GPIO3 | 64 | DIO | General-purpose input/output | |
| GPIO4 | 65 | DIO | General-purpose input/output | |
| GPIO5 | 66 | DIO | General-purpose input/output | |
| GPIO6 | 85 | DIO | General-purpose input/output | |
| GPIO7 | 86 | DIO | General-purpose input/output | |
| GPIO8 | 87 | DIO | General-purpose input/output | |
| GPIO9 | 88 | DIO | General-purpose input/output | |

## 4.8. GNSS Control and Indication Interfaces

On BG951A-GL module, the GNSS chip is independent of the baseband chip, therefore BG951A-GL module supports the following additional GNSS control and indication pins compared with BG950A-GL/BG953A-GL/BG955A-GL.

**Table 32: Pin Definition of GNSS Control and Indication Interfaces**

| Pin Name | Pin No. | I/O | Description | Comment |
|---|---|---|---|---|
| GNSS_BOOT | 75 | DI | Force the GNSS chip of the module into emergency download mode | 1.8 V power domain.<br>If unused, keep these pins open. |
| GNSS_NRST | 76 | DI | Reset the GNSS chip; Active high | |
| GNSS_EN | 97 | DI | Enable internal GNSS chip | |
| SFNIND_1PPS | 98 | DO | One pulse per second | Synchronized with the NMEA sentences output time at the rising edge. Pulse width: 100 ms.<br>If unused, keep it open. |

GNSS_EN is used to enable the LDO that powers the GNSS chip internally. In addition, this LDO can be enabled via the GPIO pins of the internal baseband chip. Pulling up GNSS_EN will power on the GNSS chip. After the module is turned on, the external host can send **AT+QGPS=1** to the GNSS chip via the GNSS UART interface to enable the GNSS function, and then the GNSS chip will output the NEMA sentences from the GNSS UART interface.

GNSS_BOOT is used to upgrade the firmware of the GNSS chip. First, pull up GNSS_BOOT, and then pull up GNSS_EN to supply power for the GNSS chip. After the module is turned on, the GNSS chip will enter the boot mode. At this time, you can use the QFlash tool to update the GNSS firmware. After the update is completed, pull down GNSS_BOOT.

1PPS output via SFNIND_1PPS is disabled by default. You can enable it with **AT+QGPSPPS=1**.

# 5 RF Specifications

## 5.1. Cellular Network

### 5.1.1. Antenna Interface & Frequency Bands

The pin definition is shown below:

**Table 33: Pin Definition of Cellular Network Interface**

| Pin Name | Pin No. | I/O | Description | Comment |
|---|---|---|---|---|
| ANT_MAIN | 60 | AIO | Main antenna interface | 50 Ω impedance |

**Table 34: Operating Frequency**

| Operating Frequency | Transmit (MHz) | Receive (MHz) | Unit |
|---|---|---|---|
| LTE HD-FDD B1 | 1920–1980 | 2110–2170 | MHz |
| LTE HD-FDD B2 | 1850–1910 | 1930–1990 | MHz |
| LTE HD-FDD B3 | 1710–1785 | 1805–1880 | MHz |
| LTE HD-FDD B4 | 1710–1755 | 2110–2155 | MHz |
| LTE HD-FDD B5 | 824–849 | 869–894 | MHz |
| LTE HD-FDD B8 | 880–915 | 925–960 | MHz |
| LTE HD-FDD B12 | 699–716 | 729–746 | MHz |
| LTE HD-FDD B13 | 777–787 | 746–756 | MHz |
| LTE HD-FDD B17 [9] | 704–716 | 734–746 | MHz |
| LTE HD-FDD B18 | 815–830 | 860–875 | MHz |

[9] LTE HD-FDD B17 is supported by Cat NB2* only.

| | | | |
|---|---|---|---|
| LTE HD-FDD B19 | 830–845 | 875–890 | MHz |
| LTE HD-FDD B20 | 832–862 | 791–821 | MHz |
| LTE HD-FDD B25 | 1850–1915 | 1930–1995 | MHz |
| LTE HD-FDD B26 [10] | 814–849 | 859–894 | MHz |
| LTE HD-FDD B27 [10] | 807–824 | 852–869 | MHz |
| LTE HD-FDD B28 | 703–748 | 758–803 | MHz |
| LTE HD-FDD B66 | 1710–1780 | 2110–2180 | MHz |

### 5.1.2. Tx Power

The Tx power of the module is presented in the following table.

**Table 35: RF Output Power**

| Frequency Bands | Max. Tx Power | Min. Tx Power |
|---|---|---|
| LTE HD-FDD: B1/B2/B3/B4/B5/B8/B12/B13/B17 [9]/B18/B19/ B20/B25/B26 [10]/B27 [10]/B28/B66 | 23 dBm ±2.7 dB | < -39 dBm |
| GSM850/EGSM900 | 33 dBm ±2 dB | 5 dBm ±5 dB |
| DCS1800/PCS1900 | 30 dBm ±2 dB | 0 dBm ±5 dB |

### 5.1.3. Rx Sensitivity

[10] LTE HD-FDD B26 and B27 are supported by Cat M1 only.

The conducted Rx sensitivity of the module is presented in the following table.

**Table 36: Conducted RF Receiving Sensitivity of BG950A-GL/BG951A-GL**

| Frequency Band | Primary | Diversity | Sensitivity (dBm) | |
|---|---|---|---|---|
| | | | Cat M1/3GPP | Cat NB1 [11]/3GPP |
| LTE HD-FDD B1 | | | -105.3/-102.3 | -114/-107.5 |
| LTE HD-FDD B2 | | | -105.3/-100.3 | -114/-107.5 |
| LTE HD-FDD B3 | | | -104.3/-99.3 | -113/-107.5 |
| LTE HD-FDD B4 | | | -105.3/-102.3 | -114/-107.5 |
| LTE HD-FDD B5 | | | -105.8/-100.8 | -115/-107.5 |
| LTE HD-FDD B8 | | | -105.8/-99.8 | -115/-107.5 |
| LTE HD-FDD B12 | | | -105.3/-99.3 | -114/-107.5 |
| LTE HD-FDD B13 | | | -105.3/-99.3 | -114/-107.5 |
| LTE HD-FDD B17 [12] | Supported | - | - | -114/-107.5 |
| LTE HD-FDD B18 | | | -106.3/-102.3 | -115/-107.5 |
| LTE HD-FDD B19 | | | -106.3/-102.3 | -115/-107.5 |
| LTE HD-FDD B20 | | | -105.8/-99.8 | -114/-107.5 |
| LTE HD-FDD B25 | | | -104.8/-100.3 | -114/-107.5 |
| LTE HD-FDD B26 [13] | | | -106.3/-100.3 | - |
| LTE HD-FDD B27 [13] | | | -106.3/-100.8 | - |
| LTE HD-FDD B28 | | | -105.8/-100.8 | -114/-107.5 |
| LTE HD-FDD B66 | | | -104.8/-101.8 | -114/-107.5 |

[11] LTE Cat NB1 receiving sensitivity without repetitions.
[12] LTE HD-FDD B17 is supported by Cat NB2* only.
[13] LTE HD-FDD B26 and B27 are supported by Cat M1 only.

**Table 37: Conducted RF Receiving Sensitivity of BG955A-GL**

| Frequency Band | Primary | Diversity | GSM/3GPP Sensitivity (dBm) | |
|---|---|---|---|---|
| GSM850/EGSM900 | Supported | - | TBD/-102 | |
| DCS1800/PCS1900 | Supported | - | TBD/-102 | |
| **Frequency Band** | **Primary** | **Diversity** | **Cat M1/3GPP Sensitivity (dBm)** | **Cat NB1 [14]/3GPP Sensitivity (dBm)** |
| LTE HD-FDD B1 | | | TBD/-102.3 | TBD/-107.5 |
| LTE HD-FDD B2 | | | TBD/-100.3 | TBD/-107.5 |
| LTE HD-FDD B3 | | | TBD/-99.3 | TBD/-107.5 |
| LTE HD-FDD B4 | | | TBD/-102.3 | TBD/-107.5 |
| LTE HD-FDD B5 | | | TBD/-100.8 | TBD/-107.5 |
| LTE HD-FDD B8 | | | TBD/-99.8 | TBD /-107.5 |
| LTE HD-FDD B12 | | | TBD/-99.3 | TBD/-107.5 |
| LTE HD-FDD B13 | | | TBD/-99.3 | TBD/-107.5 |
| LTE HD-FDD B17 [15] | Supported | - | - | TBD/-107.5 |
| LTE HD-FDD B18 | | | TBD/-102.3 | TBD/-107.5 |
| LTE HD-FDD B19 | | | TBD/-102.3 | TBD/-107.5 |
| LTE HD-FDD B20 | | | TBD/-99.8 | TBD/-107.5 |
| LTE HD-FDD B25 | | | TBD/-100.3 | TBD/-107.5 |
| LTE HD-FDD B26 [16] | | | TBD/-100.3 | - |
| LTE HD-FDD B27 [13] | | | TBD/-100.8 | - |
| LTE HD-FDD B28 | | | TBD/-100.8 | TBD/-107.5 |
| LTE HD-FDD B66 | | | TBD/-101.8 | TBD/-107.5 |

[14] LTE Cat NB1 receiving sensitivity without repetitions.
[15] LTE HD-FDD B17 is supported by Cat NB2* only.
[16] LTE HD-FDD B26 and B27 are supported by Cat M1 only.

### 5.1.4. Reference Design

It is recommended to reserve a π-type matching circuit for better RF performance, and the π-type matching components (R1, C1 and C2) should be placed as close to the antenna as possible. The capacitors are not mounted by default.

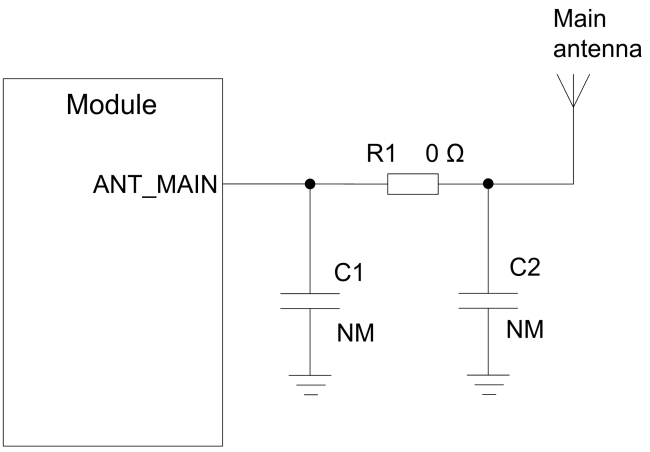


**Figure 31: Reference Circuit of Main Antenna Interface**

## 5.2. GNSS

BG950A-GL, BG953A-GL and BG955A-GL module features a fully integrated GNSS solution that supports GPS and GLONASS. BG951A-GL module has an independent GNSS solution that supports GPS, GLONASS, BDS, Galileo and QZSS.

The modules support standard NMEA 0183 protocol. BG950A-GL, BG953A-GL and BG955A-GL outputs GNSS NMEA sentences via the CLI UART interfaces. BG951A-GL outputs NMEA sentences via the GNSS UART interface. Data update rate for both modules: 1–10 Hz; 1 Hz by default.

GNSS engine is switched off by default. It must be switched on via AT command. BG950A-GL, BG953A-GL and BG955A-GL does not support concurrent operation of LTE and GNSS, while BG951A-GL does. For more details about GNSS engine technology and configurations, see ***document [4]***.

### 5.2.1. Antenna Interface & Frequency Bands

The pin definition, frequency bands, and performance of GNSS antenna interface are presented in the following table shows.

**Table 38: Pin Definition of GNSS Antenna Interface**

| Pin Name | Pin No. | I/O | Description | Comment |
|---|---|---|---|---|
| ANT_GNSS | 49 | AI | GNSS antenna interface | 50 Ω impedance |

**Table 39: BG950A-GL & BG953A-GL & BG955A-GL GNSS Frequency**

| Type | Frequency | Unit |
|---|---|---|
| GPS | 1575.42 ±1.023 | MHz |
| GLONASS | 1597.5–1605.8 | MHz |

**Table 40: BG951A-GL GNSS Frequency**

| Type | Frequency | Unit |
|---|---|---|
| GPS | 1575.42 ±1.023 | MHz |
| GLONASS | 1597.5–1605.8 | MHz |
| BDS | 1561.098 ±2.046 | MHz |
| Galileo | 1575.42 ±2.046 | MHz |
| QZSS | 1575.42 ±1.023 | MHz |

### 5.2.2. GNSS Performance

**Table 41: BG950A-GL & BG953A-GL GNSS Performance**

| Parameter | Description | Conditions | Typ. | Unit |
|---|---|---|---|---|
| Sensitivity | Cold start | Autonomous | -145 | dBm |
| | Reacquisition | Autonomous | -154 | |
| | Tracking | Autonomous | -159 | |
| TTFF | Cold start @ open sky | Autonomous | 29.42 | s |
| | | XTRA enabled | TBD | |

| | | | | |
|---|---|---|---|---|
| | Warm start @ open sky | Autonomous | 28.38 | |
| | | XTRA enabled | TBD | |
| | Hot start @ open sky | Autonomous | 1.07 | |
| | | XTRA enabled | TBD | |
| Accuracy | CEP-50 | Autonomous @ open sky | 2.0 | m |

**Table 42: BG951A-GL GNSS Performance**

| Parameter | Description | Conditions | Typ. | Unit |
|---|---|---|---|---|
| Sensitivity | Acquisition | Autonomous | -145 | dBm |
| | Reacquisition | Autonomous | -145 | |
| | Tracking | Autonomous | -160 | |
| TTFF | Cold start @ open sky | Autonomous | 34 | s |
| | | XTRA enabled | TBD | |
| | Warm start @ open sky | Autonomous | 36 | |
| | | XTRA enabled | TBD | |
| | Hot start @ open sky | Autonomous | 1 | |
| | | XTRA enabled | TBD | |
| Accuracy | CEP-50 | Autonomous @ open sky | 0.76 | m |

**Table 43: BG955A-GL GNSS Performance**

| Parameter | Description | Conditions | Typ. | Unit |
|---|---|---|---|---|
| Sensitivity | Acquisition | Autonomous | TBD | dBm |
| | Reacquisition | Autonomous | TBD | |
| | Tracking | Autonomous | TBD | |
| TTFF | Cold start @ open sky | Autonomous | TBD | s |
| | | XTRA enabled | TBD | |

| | | | | |
|---|---|---|---|---|
| | Warm start @ open sky | Autonomous | TBD | |
| | | XTRA enabled | TBD | |
| | Hot start @ open sky | Autonomous | TBD | |
| | | XTRA enabled | TBD | |
| Accuracy | CEP-50 | Autonomous @ open sky | TBD | m |

**NOTE**

1. Tracking sensitivity: the minimum GNSS signal power at which the module can maintain a lock (keep positioning for at least 3 minutes continuously).
2. Reacquisition sensitivity: the minimum GNSS signal power required for the module to maintain a lock within 3 minutes after loss of lock.
3. Acquisition sensitivity: the minimum GNSS signal power at which the module can fix a position successfully within 3 minutes after executing cold start command.

### 5.2.3. Reference Design

The following is the reference design of GNSS antenna.

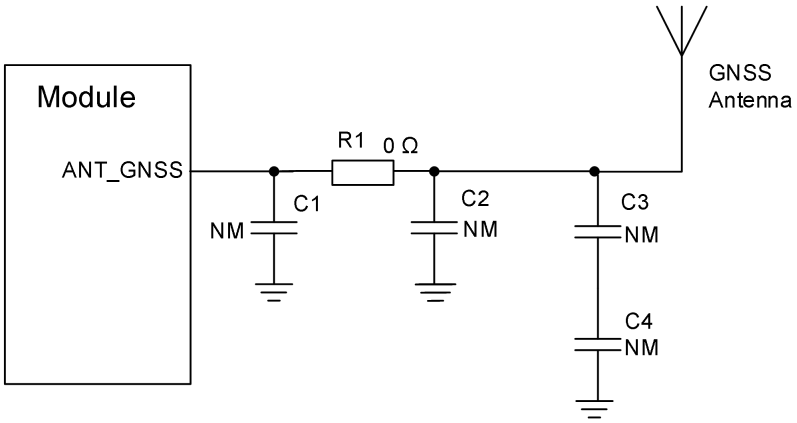


**Figure 32: Reference Design of GNSS Antenna Interface**

**NOTE**

The module is designed with a built-in LNA, and supports passive GNSS antennas only. Active antennas and external LNAs are not supported.

## 5.3. Layout Guidelines

The following layout guidelines should be taken into account in application designs.

- Maximize the distance between the GNSS antenna and the main antenna.
- Digital circuits such as (U)SIM card, USB interface, camera module, display connector, and SD card should be kept away from antennas.
- Use ground vias around the GNSS trace and sensitive analog signal traces to provide coplanar isolation and protection.
- Keep 50 Ω characteristic impedance for the ANT_GNSS trace.

Refer to ***Chapter 5.2*** for GNSS antenna reference design and antenna installation information.

## 5.4. RF Routing Guidelines

For user's PCB, the characteristic impedance of all RF traces should be 50 Ω. The impedance of the RF traces is usually determined by trace width (W), the materials' dielectric constant, the height from the reference ground to the signal layer (H), and the space between RF traces and grounds (S). Microstrip or coplanar waveguide is typically used in RF layout to control characteristic impedance. The following are reference designs of microstrip or coplanar waveguides with different PCB structures.

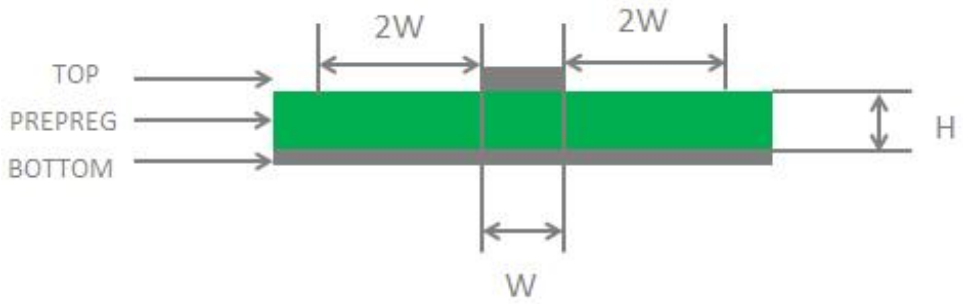


**Figure 33: Microstrip Design on a 2-Layer PCB**

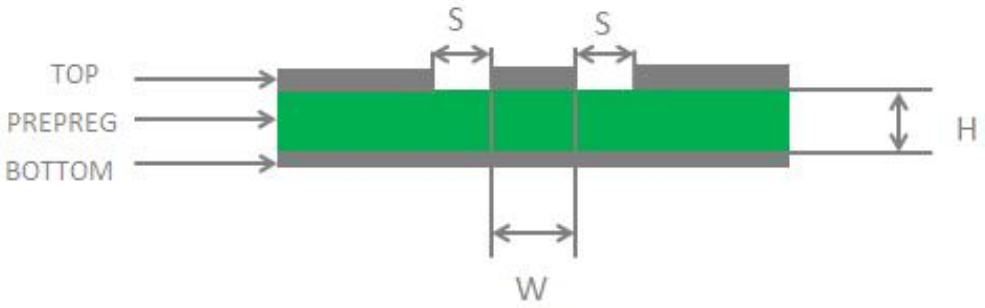


**Figure 34: Coplanar Waveguide Design on a 2-Layer PCB**

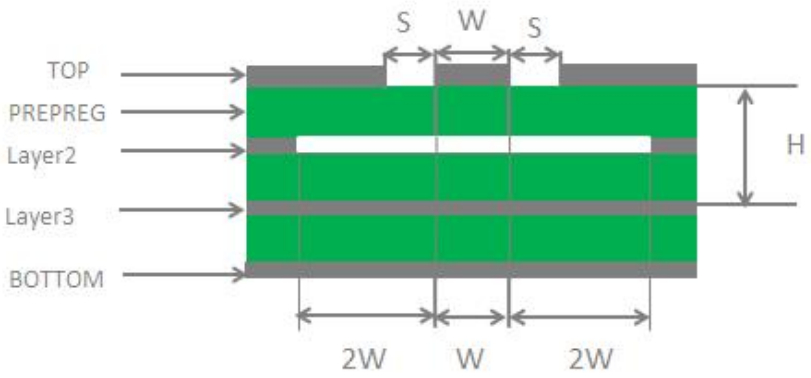


**Figure 35: Coplanar Waveguide Design on a 4-layer PCB (Layer 3 as Reference Ground)**

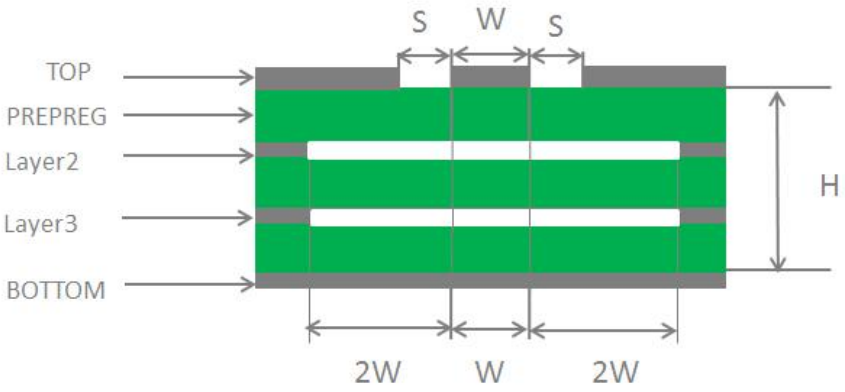


**Figure 36: Coplanar Waveguide Design on a 4-Layer PCB (Layer 4 as Reference Ground)**

To ensure RF performance and reliability, follow the principles below in RF layout design:

- Use an impedance simulation tool to accurately control the characteristic impedance of RF traces to 50 Ω.
- The GND pins adjacent to RF pins should not be designed as thermal relief pads, and should be fully connected to ground.
- The distance between the RF pins and the RF connector should be as short as possible and all the right-angle traces should be changed to curved ones. The recommended trace angle is 135°.
- There should be clearance under the signal pin of the antenna connector or solder joint.
- The reference ground of RF traces should be complete. Meanwhile, adding some ground vias around RF traces and the reference ground could help to improve RF performance. The distance between the ground vias and RF traces should be at least two times the width of RF signal traces (2 × W).
- Keep RF traces away from interference sources, and avoid intersection and paralleling between traces on adjacent layers.

For more details about RF layout, see ***document [5]***.

## 5.5. Antenna Design Requirements

**Table 44: Antenna Design Requirements**

| Antenna Type | Requirements |
|---|---|
| GNSS | Must be a passive antenna<br>Frequency range: 1559–1609 MHz<br>Polarization: RHCP or linear<br>VSWR: < 2 (Typ.)<br>Passive antenna gain: > 0 dBi |
| LTE | VSWR: ≤ 2<br>Efficiency: > 30 %<br>Gain: 1 dBi<br>Max input power: 50 W<br>Input impedance: 50 Ω<br>Polarization: vertical<br>Cable insertion loss:<br>– **< 1 dB:** LB (< 1 GHz)<br>– **< 1.5 dB**: MB (1–2.3 GHz) |

## 5.6. RF Connector Recommendation

If RF connector is used for antenna connection, it is recommended to use the U.FL-R-SMT connector provided by Hirose.

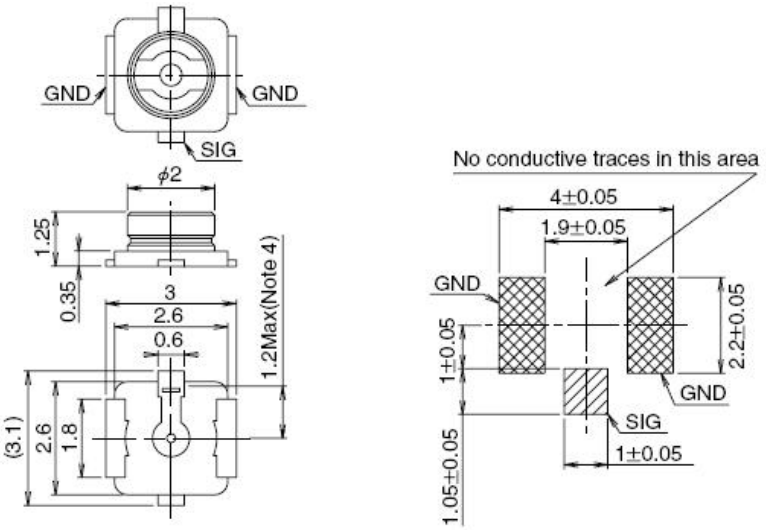


**Figure 37: Dimensions of the Receptacle (Unit: mm)**

The mated plugs listed in the following figure can be used to match the U.FL-R-SMT connector.

| | U.FL-LP-040 | U.FL-LP-066 | U.FL-LP(V)-040 | U.FL-LP-062 | U.FL-LP-088 |
|---|---|---|---|---|---|
| Part No. | 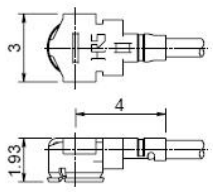 | 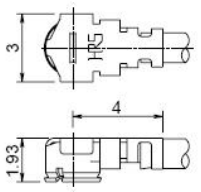 | 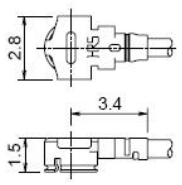 | 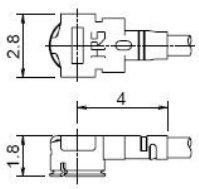 | 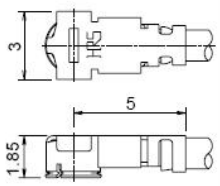 |
| Mated Height | 2.5mm Max. (2.4mm Nom.) | 2.5mm Max. (2.4mm Nom.) | 2.0mm Max. (1.9mm Nom.) | 2.4mm Max. (2.3mm Nom.) | 2.4mm Max. (2.3mm Nom.) |
| Applicable cable | Dia. 0.81mm Coaxial cable | Dia. 1.13mm and Dia. 1.32mm Coaxial cable | Dia. 0.81mm Coaxial cable | Dia. 1mm Coaxial cable | Dia. 1.37mm Coaxial cable |
| Weight (mg) | 53.7 | 59.1 | 34.8 | 45.5 | 71.7 |
| RoHS | YES | | | | |

**Figure 38: Specifications of Mated Plugs**

The following figure describes the space factor of the mated connectors.

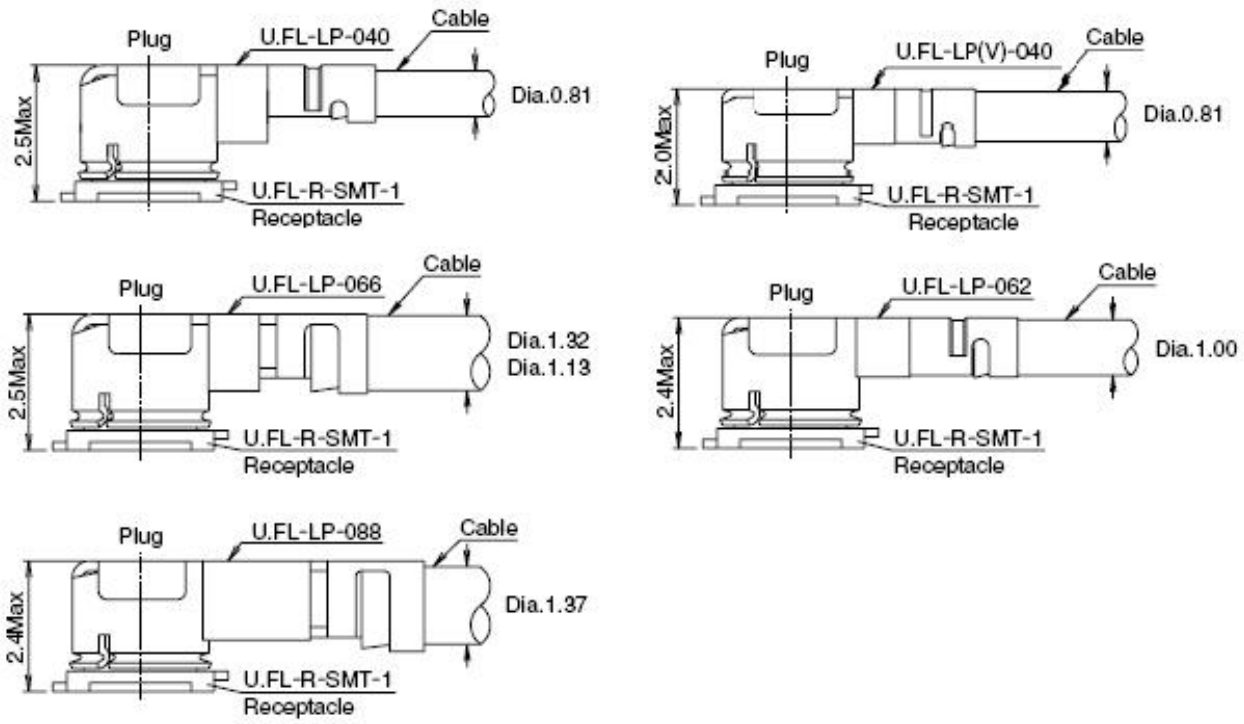


**Figure 39: Space Factor of Mated Connectors (Unit: mm)**

For more details, visit http://www.hirose.com.

# 6 Reliability and Electrical

# 7 Characteristics

## 7.1. Absolute Maximum Ratings

Absolute maximum ratings for power supply and voltage on digital and analog pins of the module are listed in the following table.

**Table 45: Absolute Maximum Ratings**

| Parameter | Min. | Max. | Unit |
|---|---|---|---|
| VBAT_RF/VBAT_BB | -0.2 | 4.5 | V |
| USB_VBUS | -0.3 | 5.5 | V |
| Voltage at Digital Pins | -0.3 | 2.0 | V |

## 7.2. Power Supply Ratings

**Table 46: BG950A-GL & BG951A-GL & BG953A-GL Power Supply Ratings**

| Parameter | Description | Conditions | Min. | Typ. | Max. | Unit |
|---|---|---|---|---|---|---|
| VBAT_BB/ VBAT_RF | Power supply for the module's baseband part/RF part | The actual input voltages must stay between the minimum and maximum values. | 2.2 | 3.3 | 4.35 | V |
| USB_VBUS | USB connection detect | - | - | 5.0 | - | V |

**Table 47: BG955A-GL Power Supply Ratings**

| Parameter | Description | Conditions | Min. | Typ. | Max. | Unit |
|---|---|---|---|---|---|---|
| VBAT_BB/ VBAT_RF | Power supply for the module's baseband part/RF part | The actual input voltages must stay between the minimum and maximum values. | 3.3 | 3.8 | 4.3 | V |
| USB_VBUS | USB connection detect | - | - | 5.0 | - | V |

## 7.3. Power Consumption

### 7.3.1. BG950A-GL Power Consumption

**Table 48: BG950A-GL Power Consumption (Power Supply: 3.3 V, Room Temperature)**

| Description | Conditions | Avg. | Max. | Unit |
|---|---|---|---|---|
| Leakage | Power-off @ USB/UART disconnected | 1.5 | - | μA |
| PSM | PSM @ USB/UART disconnected | 1.5 | - | μA |
| Rock bottom | **AT+CFUN=0** @ Sleep mode | 39 | - | μA |
| Sleep mode (USB disconnected) | LTE Cat M1<br>DRX = 1.28 s | 1.1 | - | mA |
| | LTE Cat NB1<br>DRX = 1.28 s | 2.2 | - | mA |
| | LTE Cat M1<br>e-I-DRX = 40.96 s<br>@ PTW = 1.28 s, DRX = 1.28 s | 0.09 | - | mA |
| | LTE Cat M1<br>e-I-DRX = 40.96 s<br>@ PTW = 2.56 s, DRX = 1.28 s | 0.12 | - | mA |
| | LTE Cat M1<br>e-I-DRX = 81.92 s<br>@ PTW = 1.28 s, DRX = 1.28 s | 0.07 | - | mA |
| | LTE Cat M1<br>e-I-DRX = 81.92 s<br>@ PTW = 2.56 s, DRX = 1.28 s | 0.09 | - | mA |
| | LTE Cat NB1<br>e-I-DRX = 40.96 s | 0.19 | - | mA |

| | | | | |
|---|---|---|---|---|
| | @ PTW = 2.56 s, DRX = 1.28 s | | | |
| | LTE Cat NB1<br>e-I-DRX = 81.92 s<br>@ PTW = 2.56 s, DRX = 1.28 s | 0.15 | - | mA |
| Idle state | LTE Cat M1 DRX = 1.28 s | 15.0 | - | mA |
| | LTE Cat NB1 DRX = 1.28 s | 16.0 | - | mA |
| | LTE Cat M1<br>e-I-DRX = 81.92 s<br>@ PTW = 2.56 s, DRX = 1.28 s | 15.0 | - | mA |
| | LTE Cat NB1<br>e-I-DRX = 81.92 s<br>@ PTW = 2.56 s, DRX = 1.28 s | 15.0 | - | mA |
| LTE Cat M1 data transfer (GNSS OFF) | LTE HD-FDD B1 @ 23.01 dBm | 242 | 657 | mA |
| | LTE HD-FDD B2 @ 23.04 dBm | 224 | 596 | mA |
| | LTE HD-FDD B3 @ 23.03 dBm | 207 | 535 | mA |
| | LTE HD-FDD B4 @ 23.03 dBm | 208 | 533 | mA |
| | LTE HD-FDD B5 @ 23.08 dBm | 208 | 544 | mA |
| | LTE HD-FDD B8 @ 23.02 dBm | 220 | 607 | mA |
| | LTE HD-FDD B12 @ 23.01 dBm | 204 | 521 | mA |
| | LTE HD-FDD B13 @ 23.03 dBm | 199 | 514 | mA |
| | LTE HD-FDD B18 @ 23.04 dBm | 201 | 528 | mA |
| | LTE HD-FDD B19 @ 23.16 dBm | 209 | 548 | mA |
| | LTE HD-FDD B20 @ 23.02 dBm | 211 | 555 | mA |
| | LTE HD-FDD B25 @ 23.06 dBm | 236 | 628 | mA |
| | LTE HD-FDD B26 @ 23.07 dBm | 209 | 544 | mA |
| | LTE HD-FDD B27 @ 23.09 dBm | 201 | 519 | mA |
| | LTE HD-FDD B28 @ 22.99 dBm | 200 | 504 | mA |
| | LTE HD-FDD B66 @ 22.78 dBm | 209 | 536 | mA |
| LTE Cat NB1 data transfer (GNSS OFF) | LTE HD-FDD B1 @ 23.19 dBm | 247 | 700 | mA |
| | LTE HD-FDD B2 @ 23.01 dBm | 222 | 588 | mA |

| | | | | |
|---|---|---|---|---|
| | LTE HD-FDD B3 @ 23.10 dBm | 208 | 548 | mA |
| | LTE HD-FDD B4 @ 23.09 dBm | 203 | 541 | mA |
| | LTE HD-FDD B5 @ 23.03 dBm | 204 | 532 | mA |
| | LTE HD-FDD B8 @ 23.10 dBm | 223 | 608 | mA |
| | LTE HD-FDD B12 @ 23.09 dBm | 194 | 529 | mA |
| | LTE HD-FDD B13 @ 23.20 dBm | 185 | 499 | mA |
| | LTE HD-FDD B17 @ 23.06 dBm | 191 | 515 | mA |
| | LTE HD-FDD B18 @ 23.19 dBm | 197 | 530 | mA |
| | LTE HD-FDD B19 @ 23.20 dBm | 200 | 541 | mA |
| | LTE HD-FDD B20 @ 23.15 dBm | 209 | 570 | mA |
| | LTE HD-FDD B25 @ 23.17 dBm | 220 | 585 | mA |
| | LTE HD-FDD B28 @ 23.12 dBm | 187 | 506 | mA |
| | LTE HD-FDD B66 @ 22.82 dBm | 205 | 554 | mA |

### 7.3.2. BG951A-GL Power Consumption

**Table 49: BG951A-GL Power Consumption (Power Supply: 3.3 V, Room Temperature)**

| Description | Conditions | Avg. | Max. | Unit |
|---|---|---|---|---|
| Leakage | Power-off @ USB/UART disconnected | 1.5 | - | μA |
| PSM | PSM @ USB/UART disconnected | 1.5 | - | μA |
| Rock bottom | **AT+CFUN=0** @ Sleep mode | 42 | - | μA |
| Sleep mode<br>(USB disconnected) | LTE Cat M1 DRX = 1.28 s | 1.1 | - | mA |
| | LTE Cat NB1 DRX = 1.28 s | 2.2 | - | mA |
| | LTE Cat M1<br>e-I-DRX = 40.96 s<br>@ PTW = 1.28 s, DRX = 1.28 s | 0.09 | - | mA |
| | LTE Cat M1<br>e-I-DRX = 40.96 s<br>@ PTW = 2.56 s, DRX = 1.28 s | 0.12 | - | mA |
| | LTE Cat M1 | 0.08 | - | mA |

| | | | | |
|---|---|---|---|---|
| | e-I-DRX = 81.92 s<br>@ PTW = 1.28 s, DRX = 1.28 s | | | |
| | LTE Cat M1<br>e-I-DRX = 81.92 s<br>@ PTW = 2.56 s, DRX = 1.28 s | 0.10 | | mA |
| | LTE Cat NB1<br>e-I-DRX = 40.96 s<br>@ PTW = 2.56 s, DRX = 1.28 s | 0.18 | - | mA |
| | LTE Cat NB1<br>e-I-DRX = 81.92 s<br>@ PTW = 2.56 s, DRX = 1.28 s | 0.14 | - | mA |
| Idle state | LTE Cat M1 DRX = 1.28 s | 17.0 | - | mA |
| | LTE Cat NB1 DRX = 1.28 s | 17.0 | - | mA |
| | LTE Cat M1<br>e-I-DRX = 81.92 s<br>@ PTW = 2.56 s, DRX = 1.28 s | 16.0 | - | mA |
| | LTE Cat NB1<br>e-I-DRX = 81.92 s<br>@ PTW = 2.56 s, DRX = 1.28 s | 16.0 | - | mA |
| LTE Cat M1 data transfer (GNSS OFF) | LTE HD-FDD B1 @ 23.01 dBm | 242 | 657 | mA |
| | LTE HD-FDD B2 @ 23.04 dBm | 224 | 596 | mA |
| | LTE HD-FDD B3 @ 23.03 dBm | 207 | 535 | mA |
| | LTE HD-FDD B4 @ 23.03 dBm | 208 | 533 | mA |
| | LTE HD-FDD B5 @ 23.08 dBm | 208 | 544 | mA |
| | LTE HD-FDD B8 @ 23.02 dBm | 220 | 607 | mA |
| | LTE HD-FDD B12 @ 23.01 dBm | 204 | 521 | mA |
| | LTE HD-FDD B13 @ 23.03 dBm | 199 | 514 | mA |
| | LTE HD-FDD B18 @ 23.04 dBm | 201 | 528 | mA |
| | LTE HD-FDD B19 @ 23.16 dBm | 209 | 548 | mA |
| | LTE HD-FDD B20 @ 23.02dBm | 211 | 555 | mA |
| | LTE HD-FDD B25 @ 23.06 dBm | 236 | 628 | mA |
| | LTE HD-FDD B26 @ 23.07 dBm | 209 | 544 | mA |
| | LTE HD-FDD B27 @ 23.09 dBm | 201 | 519 | mA |

| | | | | |
|---|---|---|---|---|
| | LTE HD-FDD B28 @ 22.99 dBm | 200 | 504 | mA |
| | LTE HD-FDD B66 @ 22.78 dBm | 209 | 536 | mA |
| LTE Cat NB1 data transfer (GNSS OFF) | LTE HD-FDD B1 @ 23.19 dBm | 247 | 700 | mA |
| | LTE HD-FDD B2 @ 23.01 dBm | 222 | 588 | mA |
| | LTE HD-FDD B3 @ 23.10 dBm | 208 | 548 | mA |
| | LTE HD-FDD B4 @ 23.09 dBm | 203 | 541 | mA |
| | LTE HD-FDD B5 @ 23.03 dBm | 204 | 532 | mA |
| | LTE HD-FDD B8 @ 23.10 dBm | 223 | 608 | mA |
| | LTE HD-FDD B12 @ 23.09 dBm | 194 | 529 | mA |
| | LTE HD-FDD B13 @ 23.20 dBm | 185 | 499 | mA |
| | LTE HD-FDD B17 @ 23.06 dBm | 191 | 515 | mA |
| | LTE HD-FDD B18 @ 23.19 dBm | 197 | 530 | mA |
| | LTE HD-FDD B19 @ 23.20 dBm | 200 | 541 | mA |
| | LTE HD-FDD B20 @ 23.15 dBm | 209 | 570 | mA |
| | LTE HD-FDD B25 @ 23.17 dBm | 220 | 585 | mA |
| | LTE HD-FDD B28 @ 23.12 dBm | 187 | 506 | mA |
| | LTE HD-FDD B66 @ 22.82 dBm | 205 | 554 | mA |

### 7.3.3. BG953A-GL Power Consumption

**Table 50: BG953A-GL Power Consumption (Power Supply: 3.3 V, Room Temperature)**

| Description | Conditions | Avg. | Max. | Unit |
|---|---|---|---|---|
| Leakage | Power-off @ USB/UART disconnected | 1.5 | - | μA |
| PSM | PSM @ USB/UART disconnected | 1.5 | - | μA |
| Rock bottom | **AT+CFUN=0** @ Sleep mode | TBD | - | μA |
| Sleep mode (USB disconnected) | LTE Cat M1<br>DRX = 1.28 s | TBD | - | mA |
| | LTE Cat NB1<br>DRX = 1.28 s | TBD | - | mA |

| | | | | |
|---|---|---|---|---|
| | LTE Cat M1<br>e-I-DRX = 40.96 s<br>@ PTW = 1.28 s, DRX = 1.28 s | TBD | - | mA |
| | LTE Cat M1<br>e-I-DRX = 40.96 s<br>@ PTW = 2.56 s, DRX = 1.28 s | TBD | - | mA |
| | LTE Cat M1<br>e-I-DRX = 81.92 s<br>@ PTW = 1.28 s, DRX = 1.28 s | TBD | - | mA |
| | LTE Cat M1<br>e-I-DRX = 81.92 s<br>@ PTW = 2.56 s, DRX = 1.28 s | TBD | - | mA |
| | LTE Cat NB1<br>e-I-DRX = 40.96 s<br>@ PTW = 2.56 s, DRX = 1.28 s | TBD | - | mA |
| | LTE Cat NB1<br>e-I-DRX = 81.92 s<br>@ PTW = 2.56 s, DRX = 1.28 s | TBD | - | mA |
| Idle state | LTE Cat M1 DRX = 1.28 s | TBD | - | mA |
| | LTE Cat NB1 DRX = 1.28 s | TBD | - | mA |
| | LTE Cat M1<br>e-I-DRX = 81.92 s<br>@ PTW = 2.56 s, DRX = 1.28 s | TBD | - | mA |
| | LTE Cat NB1<br>e-I-DRX = 81.92 s<br>@ PTW = 2.56 s, DRX = 1.28 s | TBD | - | mA |
| LTE Cat M1 data transfer (GNSS OFF) | LTE HD-FDD B1 @ 23.01 dBm | TBD | TBD | mA |
| | LTE HD-FDD B2 @ 23.04 dBm | TBD | TBD | mA |
| | LTE HD-FDD B3 @ 23.03 dBm | TBD | TBD | mA |
| | LTE HD-FDD B4 @ 23.03 dBm | TBD | TBD | mA |
| | LTE HD-FDD B5 @ 23.08 dBm | TBD | TBD | mA |
| | LTE HD-FDD B8 @ 23.02 dBm | TBD | TBD | mA |
| | LTE HD-FDD B12 @ 23.01 dBm | TBD | TBD | mA |
| | LTE HD-FDD B13 @ 23.03 dBm | TBD | TBD | mA |
| | LTE HD-FDD B18 @ 23.04 dBm | TBD | TBD | mA |
| | LTE HD-FDD B19 @ 23.16 dBm | TBD | TBD | mA |

| | | | | |
|---|---|---|---|---|
| | LTE HD-FDD B20 @ 23.02 dBm | TBD | TBD | mA |
| | LTE HD-FDD B25 @ 23.06 dBm | TBD | TBD | mA |
| | LTE HD-FDD B26 @ 23.07 dBm | TBD | TBD | mA |
| | LTE HD-FDD B27 @ 23.09 dBm | TBD | TBD | mA |
| | LTE HD-FDD B28 @ 22.99 dBm | TBD | TBD | mA |
| | LTE HD-FDD B66 @ 22.78 dBm | TBD | TBD | mA |
| LTE Cat NB1 data transfer (GNSS OFF) | LTE HD-FDD B1 @ 23.19 dBm | TBD | TBD | mA |
| | LTE HD-FDD B2 @ 23.01 dBm | TBD | TBD | mA |
| | LTE HD-FDD B3 @ 23.10 dBm | TBD | TBD | mA |
| | LTE HD-FDD B4 @ 23.09 dBm | TBD | TBD | mA |
| | LTE HD-FDD B5 @ 23.03 dBm | TBD | TBD | mA |
| | LTE HD-FDD B8 @ 23.10 dBm | TBD | TBD | mA |
| | LTE HD-FDD B12 @ 23.09 dBm | TBD | TBD | mA |
| | LTE HD-FDD B13 @ 23.20 dBm | TBD | TBD | mA |
| | LTE HD-FDD B17 @ 23.06 dBm | TBD | TBD | mA |
| | LTE HD-FDD B18 @ 23.19 dBm | TBD | TBD | mA |
| | LTE HD-FDD B19 @ 23.20 dBm | TBD | TBD | mA |
| | LTE HD-FDD B20 @ 23.15 dBm | TBD | TBD | mA |
| | LTE HD-FDD B25 @ 23.17 dBm | TBD | TBD | mA |
| | LTE HD-FDD B28 @ 23.12 dBm | TBD | TBD | mA |
| | LTE HD-FDD B66 @ 22.82 dBm | TBD | TBD | mA |

### 7.3.4. BG955A-GL Power Consumption

**Table 51: BG955A-GL Power Consumption (Power Supply: 3.8 V, Room Temperature)**

| Description | Conditions | Avg. | Max. | Unit |
|---|---|---|---|---|
| Leakage | Power-off @ USB/UART disconnected | 1.5 | - | μA |
| PSM | PSM @ USB/UART disconnected | 1.5 | - | μA |
| Rock bottom | **AT+CFUN=0** @ Sleep mode | TBD | - | μA |
| Sleep mode (USB disconnected) | LTE Cat M1<br>DRX = 1.28 s | TBD | - | mA |
| | LTE Cat NB1<br>DRX = 1.28 s | TBD | - | mA |
| | LTE Cat M1<br>e-I-DRX = 40.96 s<br>@ PTW = 1.28 s, DRX = 1.28 s | TBD | - | mA |
| | LTE Cat M1<br>e-I-DRX = 40.96 s<br>@ PTW = 2.56 s, DRX = 1.28 s | TBD | - | mA |
| | LTE Cat M1<br>e-I-DRX = 81.92 s<br>@ PTW = 1.28 s, DRX = 1.28 s | TBD | - | mA |
| | LTE Cat M1<br>e-I-DRX = 81.92 s<br>@ PTW = 2.56 s, DRX = 1.28 s | TBD | - | mA |
| | LTE Cat NB1<br>e-I-DRX = 40.96 s<br>@ PTW = 2.56 s, DRX = 1.28 s | TBD | - | mA |
| | LTE Cat NB1<br>e-I-DRX = 81.92 s<br>@ PTW = 2.56 s, DRX = 1.28 s | TBD | - | mA |
| Idle state | LTE Cat M1 DRX = 1.28 s | TBD | - | mA |
| | LTE Cat NB1 DRX = 1.28 s | TBD | - | mA |
| | LTE Cat M1<br>e-I-DRX = 81.92 s<br>@ PTW = 2.56 s, DRX = 1.28 s | TBD | - | mA |
| | LTE Cat NB1<br>e-I-DRX = 81.92 s<br>@ PTW = 2.56 s, DRX = 1.28 s | TBD | - | mA |
| LTE Cat M1 data transfer (GNSS OFF) | LTE HD-FDD B1 @ 23.01 dBm | TBD | TBD | mA |
| | LTE HD-FDD B2 @ 23.04 dBm | TBD | TBD | mA |
| | LTE HD-FDD B3 @ 23.03 dBm | TBD | TBD | mA |

| | | | | |
|---|---|---|---|---|
| | LTE HD-FDD B4 @ 23.03 dBm | TBD | TBD | mA |
| | LTE HD-FDD B5 @ 23.08 dBm | TBD | TBD | mA |
| | LTE HD-FDD B8 @ 23.02 dBm | TBD | TBD | mA |
| | LTE HD-FDD B12 @ 23.01 dBm | TBD | TBD | mA |
| | LTE HD-FDD B13 @ 23.03 dBm | TBD | TBD | mA |
| | LTE HD-FDD B18 @ 23.04 dBm | TBD | TBD | mA |
| | LTE HD-FDD B19 @ 23.16 dBm | TBD | TBD | mA |
| | LTE HD-FDD B20 @ 23.02 dBm | TBD | TBD | mA |
| | LTE HD-FDD B25 @ 23.06 dBm | TBD | TBD | mA |
| | LTE HD-FDD B26 @ 23.07 dBm | TBD | TBD | mA |
| | LTE HD-FDD B27 @ 23.09 dBm | TBD | TBD | mA |
| | LTE HD-FDD B28 @ 22.99 dBm | TBD | TBD | mA |
| | LTE HD-FDD B66 @ 22.78 dBm | TBD | TBD | mA |
| LTE Cat NB1 data transfer (GNSS OFF) | LTE HD-FDD B1 @ 23.19 dBm | TBD | TBD | mA |
| | LTE HD-FDD B2 @ 23.01 dBm | TBD | TBD | mA |
| | LTE HD-FDD B3 @ 23.10 dBm | TBD | TBD | mA |
| | LTE HD-FDD B4 @ 23.09 dBm | TBD | TBD | mA |
| | LTE HD-FDD B5 @ 23.03 dBm | TBD | TBD | mA |
| | LTE HD-FDD B8 @ 23.10 dBm | TBD | TBD | mA |
| | LTE HD-FDD B12 @ 23.09 dBm | TBD | TBD | mA |
| | LTE HD-FDD B13 @ 23.20 dBm | TBD | TBD | mA |
| | LTE HD-FDD B17 @ 23.06 dBm | TBD | TBD | mA |
| | LTE HD-FDD B18 @ 23.19 dBm | TBD | TBD | mA |
| | LTE HD-FDD B19 @ 23.20 dBm | TBD | TBD | mA |
| | LTE HD-FDD B20 @ 23.15 dBm | TBD | TBD | mA |
| | LTE HD-FDD B25 @ 23.17 dBm | TBD | TBD | mA |

| | | | | |
|---|---|---|---|---|
| | LTE HD-FDD B28 @ 23.12 dBm | TBD | TBD | mA |
| | LTE HD-FDD B66 @ 22.82 dBm | TBD | TBD | mA |

### 7.3.5. GNSS Power Consumption

**Table 52: BG950A-GL GNSS Power Consumption**

| Description | Conditions | Typ. | Unit |
|---|---|---|---|
| Searching **(AT+CFUN=0)** | Cold start @ Passive antenna | 48.19 | mA |
| | Hot start @ Passive antenna | 48.63 | mA |
| | Lost state @ Passive antenna | 47.97 | mA |
| Tracking **(AT+CFUN=0)** | Instrument environment @ Passive antenna | 48.44 | mA |
| | Open sky @ Real network, Passive antenna | TBD | mA |

**Table 53: BG951A-GL GNSS Power Consumption**

| Description | Conditions | Typ. | Unit |
|---|---|---|---|
| GNSS startup non-positioning **(AT+CFUN=0** & **AT+QSCLK=2)** | Instrument environment @ Passive antenna | 3.62 | mA |
| Searching **(AT+CFUN=0)** | Cold start @ Passive antenna | 21.51 | mA |
| | Hot start @ Passive antenna | 20.07 | mA |
| | Lost state @ Passive antenna | 20.99 | mA |
| Tracking **(AT+CFUN=0)** | Instrument environment @ Passive antenna | 15.51 | mA |
| | Open sky @ Real network, Passive antenna | 16.50 | mA |

**Table 54: BG953A-GL GNSS Power Consumption**

| Description | Conditions | Typ. | Unit |
|---|---|---|---|
| Searching | Cold start @ Passive antenna | TBD | mA |

| | | | |
|---|---|---|---|
| **(AT+CFUN=0)** | Hot start @ Passive antenna | TBD | mA |
| | Lost state @ Passive antenna | TBD | mA |
| Tracking **(AT+CFUN=0)** | Instrument environment @ Passive antenna | TBD | mA |
| | Open sky @ Real network, Passive antenna | TBD | mA |

**Table 55: BG955A-GL GNSS Power Consumption**

| Description | Conditions | Typ. | Unit |
|---|---|---|---|
| Searching **(AT+CFUN=0)** | Cold start @ Passive antenna | TBD | mA |
| | Hot start @ Passive antenna | TBD | mA |
| | Lost state @ Passive antenna | TBD | mA |
| Tracking **(AT+CFUN=0)** | Instrument environment @ Passive antenna | TBD | mA |
| | Open sky @ Real network, Passive antenna | TBD | mA |

## 7.4. Digital I/O Characteristic

**Table 56: 1.8 V Digital I/O Requirements – (U)SIM**

| Parameter | Description | Min. | Max. | Unit |
|---|---|---|---|---|
| USIM_VDD | Power supply | 1.7 | 1.9 | V |
| $V_{IH}$ | Input high voltage | 1.26 | 2.0 | V |
| $V_{IL}$ | Input low voltage | -0.2 | 0.54 | V |
| $V_{OH}$ | Output high voltage | 1.44 | 2.0 | V |
| $V_{OL}$ | Output low voltage | -0.2 | 0.36 | V |

**Table 57: 1.8 V Digital I/O Requirements – Others**

| Parameter | Description | Min. | Max. | Unit |
|---|---|---|---|---|
| $V_{IH}$ | Input high voltage | 1.26 | 2.0 | V |

| | | | | |
|---|---|---|---|---|
| $V_{IL}$ | Input low voltage | -0.2 | 0.54 | V |
| $V_{OH}$ | Output high voltage | 1.44 | 2.0 | V |
| $V_{OL}$ | Output low voltage | -0.2 | 0.36 | V |

## 7.5. ESD Protection

Static electricity occurs naturally and it may damage the module. Therefore, applying proper ESD countermeasures and handling methods is imperative. For example, wear anti-static gloves during the development, production, assembly, and testing of the module; add ESD protection components to the ESD sensitive interfaces and points in the product design.

**Table 58: Electrostatics Discharge Characteristics (Temperature: 25 °C, Humidity: 45 %)**

| Tested Interfaces | Contact Discharge | Air Discharge | Unit |
|---|---|---|---|
| VBAT, GND | ±8 | ±12 | kV |
| Main Antenna Interfaces | ±5 | ±10 | kV |
| GNSS Antenna Interfaces | ±5 | ±8 | kV |

## 7.6. Operating and Storage Temperatures

**Table 59: Operating and Storage Temperatures**

| Parameter | Min. | Typ. | Max. | Unit |
|---|---|---|---|---|
| Operating Temperature Range [17] | -35 | +25 | +75 | °C |
| Extended Temperature Range [18] | -40 | - | +85 | °C |
| Storage Temperature Range | -40 | - | +90 | °C |

[17] Within the operating temperature range, the module meets 3GPP specifications.
[18] Within the extended temperature range, the module retains the ability to establish and maintain functions such as SMS, data transmission, etc., without any unrecoverable malfunction. Radio spectrum and radio network are not influenced, while one or more specifications, such as $P_{out}$, may exceed the specified 3GPP tolerances. When the temperature returns to the operating temperature range, the module meets 3GPP specifications again.

# 8 Mechanical Information

This chapter describes the mechanical dimensions of the module. All dimensions are measured in millimeters (mm). The dimensional tolerances are ±0.2 mm, unless otherwise specified.

## 8.1. Top and Side View Dimensions

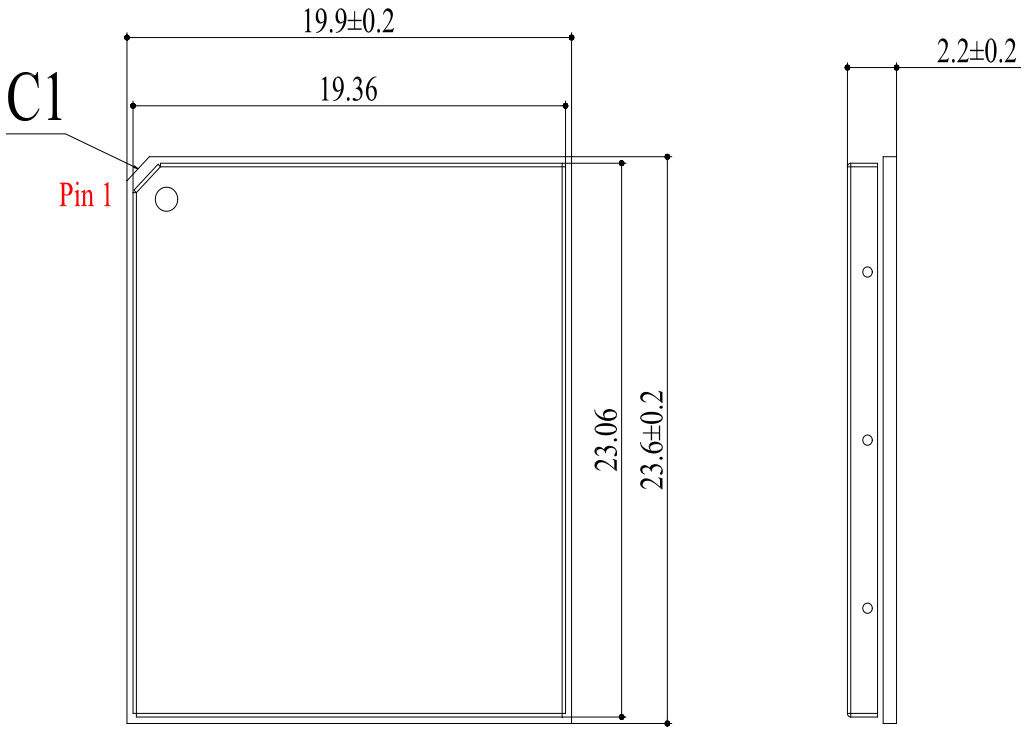


**Figure 40: Module Top and Side Dimensions (Unit: mm)**

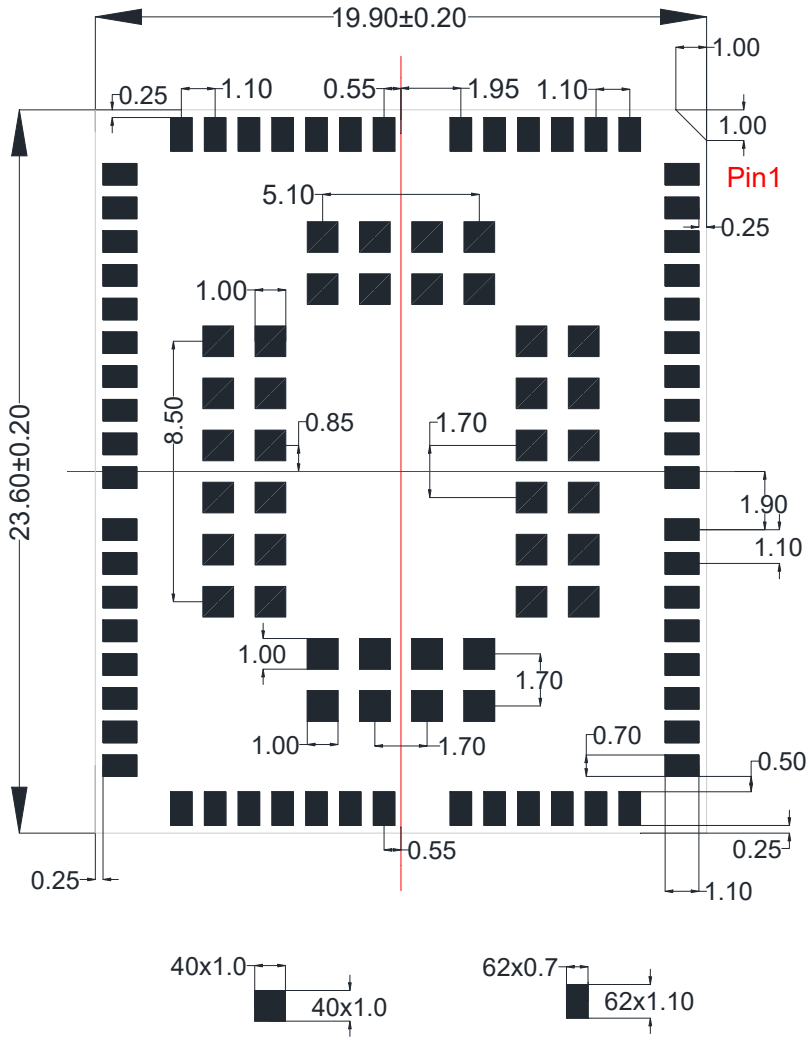


**Figure 41: Module Bottom Dimensions (Bottom View, Unit: mm)**

**NOTE**

The package warpage level of the module conforms to the *JEITA ED-7306* standard.

## 8.2. Recommended Footprint

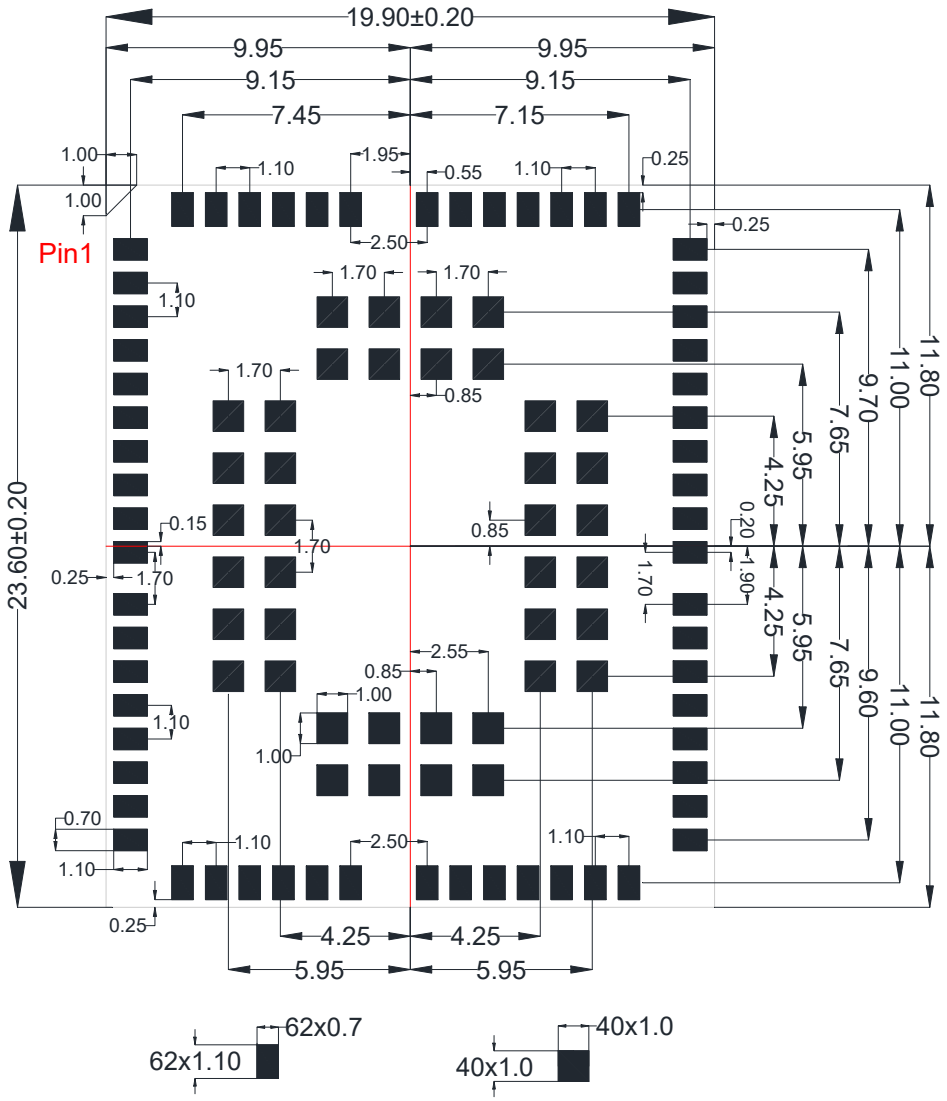


**Figure 42: Recommended Footprint (Top View, Unit: mm)**

**NOTE**

1. Keep at least 3 mm between the module and other components on the motherboard to improve soldering quality and maintenance convenience.
2. All reserved pins must be kept open.
3. For stencil design requirements of the module, see ***document [6].***

## 8.3. Top and Bottom Views

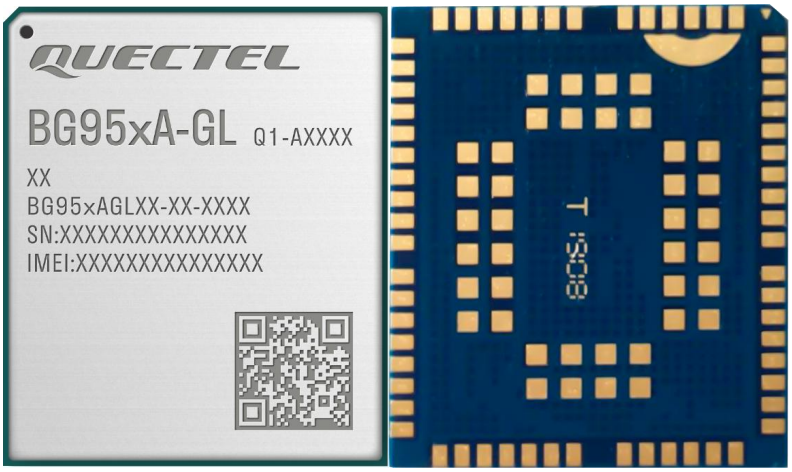


**Figure 43: Top & Bottom Views of BG95xA-GL**

**NOTE**

Images above are for illustrative purposes only and may differ from the actual module. For authentic appearance and label, please refer to the module received from Quectel.

# 9 Storage, Manufacturing & Packaging

## 9.1. Storage Conditions

The module is provided with vacuum-sealed packaging. MSL of the module is rated as 3. The storage requirements are shown below.

1. Recommended Storage Condition: the temperature should be 23 ±5 °C and the relative humidity should be 35–60 %.

2. Shelf life (in a vacuum-sealed packaging): 12 months in Recommended Storage Condition.

3. Floor life: 168 hours [19] in a factory where the temperature is 23 ±5 °C and relative humidity is below 60 %. After the vacuum-sealed packaging is removed, the module must be processed in reflow soldering or other high-temperature operations within 168 hours. Otherwise, the module should be stored in an environment where the relative humidity is less than 10 % (e.g., a dry cabinet).

4. The module should be pre-baked to avoid blistering, cracks and inner-layer separation in PCB under the following circumstances:

   - The module is not stored in Recommended Storage Condition;
   - Violation of the third requirement mentioned above;
   - Vacuum-sealed packaging is broken, or the packaging has been removed for over 24 hours;
   - Before module repairing.

5. If needed, the pre-baking should follow the requirements below:

   - The module should be baked for 8 hours at 120 ±5 °C;
   - The module must be soldered to PCB within 24 hours after the baking, otherwise it should be put in a dry environment such as in a dry cabinet.

[19] This floor life is only applicable when the environment conforms to *IPC/JEDEC J-STD-033*. It is recommended to start the solder reflow process within 24 hours after the package is removed if the temperature and moisture do not conform to, or are not sure to conform to *IPC/JEDEC J-STD-033*. And do not remove the packages of tremendous modules if they are not ready for soldering.

**NOTE**

1. To avoid blistering, layer separation and other soldering issues, extended exposure of the module to the air is forbidden.
2. Take out the module from the package and put it on high-temperature-resistant fixtures before baking. All modules must be soldered to PCB within 24 hours of the baking, otherwise put them in the drying oven. If shorter baking time is desired, see *IPC/JEDEC J-STD-033* for the baking procedure.
3. Pay attention to ESD protection, such as wearing anti-static gloves, when touching the modules.

## 9.2. Manufacturing and Soldering

Push the squeegee to apply the solder paste on the stencil surface, thus making the paste fill the stencil openings and then penetrate the PCB. Apply proper force on the squeegee to produce a clean stencil surface on a single pass. To guarantee module soldering quality, 0.13–0.15 mm stencil thickness for the module is recommended. For more details, see ***document [6].***

The peak reflow temperature should be 235–246 ºC, with 246 ºC as the absolute maximum reflow temperature. To avoid module damage caused by repeated heating, it is strongly recommended that the module should be mounted only after reflow soldering of the other side of PCB has been completed. The recommended reflow soldering thermal profile (lead-free reflow soldering) and related parameters are shown below.

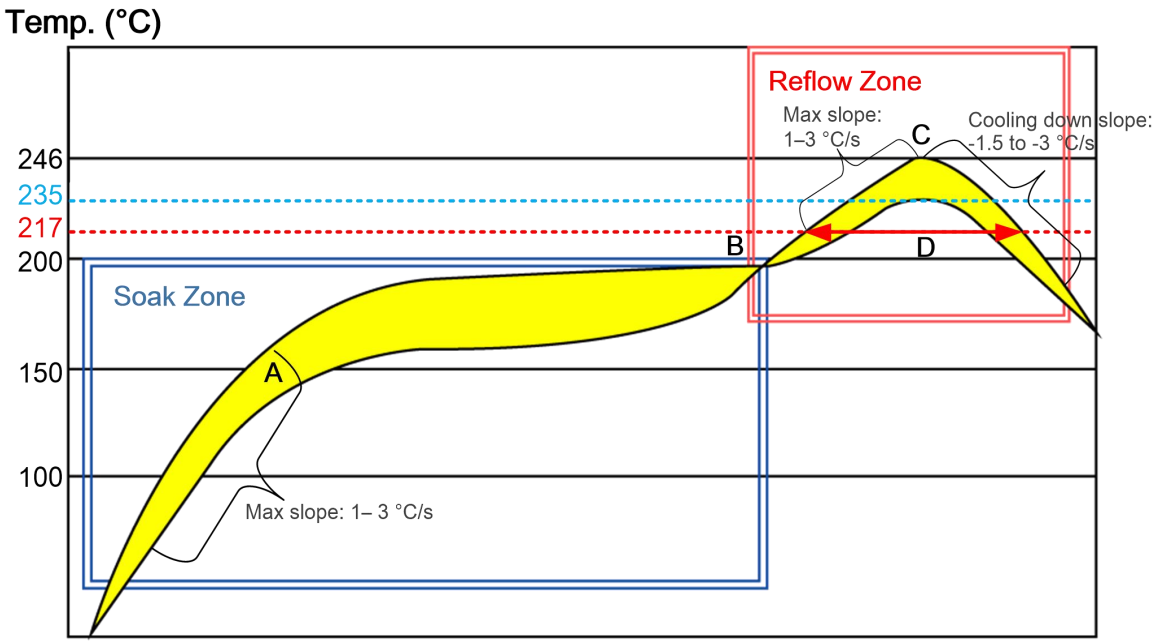


**Figure 44: Recommended Reflow Soldering Thermal Profile**

**Table 60: Recommended Thermal Profile Parameters**

| Factor | Recommendation |
|---|---|
| **Soak Zone** | |
| Max slope | 1–3 °C/s |
| Soak time (between A and B: 150 °C and 200 °C) | 70–120 s |
| **Reflow Zone** | |
| Max slope | 1–3 °C/s |
| Reflow time (D: over 217 °C) | 40–70 s |
| Max temperature | 235–246 °C |
| Cooling down slope | -1.5 to 3 °C/s |
| **Reflow Cycle** | |
| Max reflow cycle | 1 |

**NOTE**

1. If the module requires conformal coating, DO NOT use any coating material that may chemically react with the PCB or shielding cover, and prevent the coating material from flowing into the module.
2. Avoid using ultrasonic technology for module cleaning since it can damage crystals inside the module.
3. Due to the SMT process complexity, please contact Quectel Technical Support in advance regarding any situation that you are not sure about, or any process (e.g., selective soldering, ultrasonic soldering) that is not mentioned in ***document [6].***

## 9.3. Packaging Specifications

The module is delivered in a tape carrier packaging and details are as follows:

### 9.3.1. Carrier Tape

Dimension details:

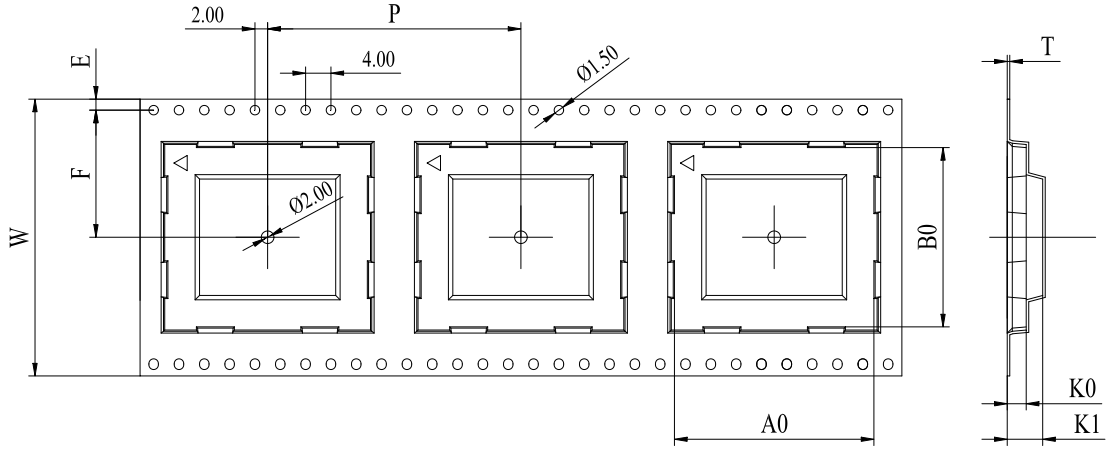


**Figure 45: Carrier Tape Dimension Drawing**

**Table 61: Carrier Tape Dimension Table (Unit: mm)**

| W | P | T | A0 | B0 | K0 | K1 | F | E |
|---|---|---|---|---|---|---|---|---|
| 44 | 32 | 0.35 | 20.2 | 24 | 3.15 | 6.65 | 20.2 | 1.75 |

### 9.3.2. Plastic Reel

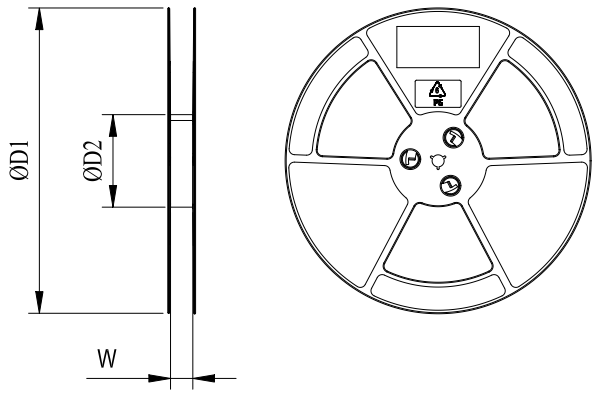


**Figure 46: Plastic Reel Dimension Drawing**

**Table 62: Plastic Reel Dimension Table (Unit: mm)**

| øD1 | øD2 | W |
|---|---|---|
| 330 | 100 | 44.5 |

### 9.3.3. Packing Process

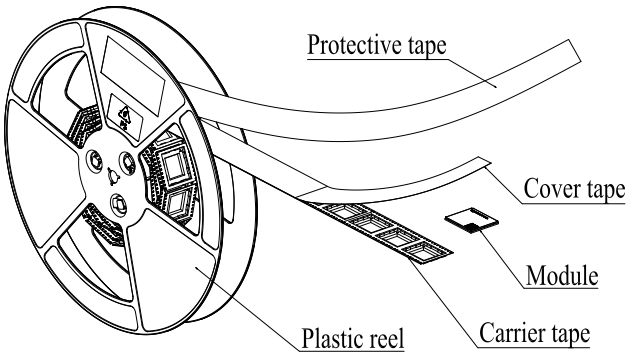


Place the module onto the carrier tape and use the cover tape to cover them; then wind the heat-sealed carrier tape on the plastic reel and use the protective tape for protection. One plastic reel can load 250 modules.

Place the packaged plastic reel, humidity indicator card and desiccant bag inside a vacuum bag, then vacuumize it.

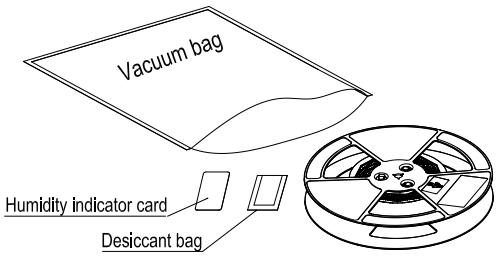


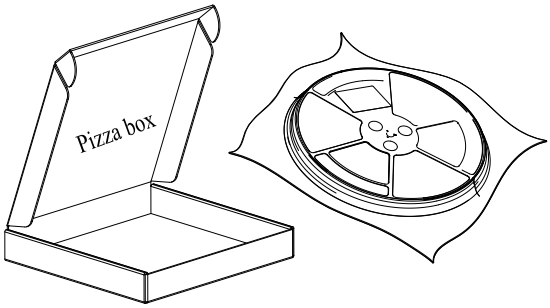


Place the vacuum-packed plastic reel inside a pizza box.

Place 4 pizza boxes inside 1 carton and seal it. One carton can pack 1000 modules.

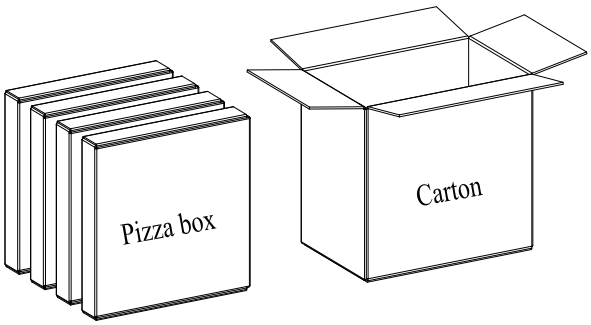


**Figure 47: Packaging Process**

# 10 Appendix References

**Table 63: Related Documents**

| Document Name |
|---|
| [1] Quectel_UMTS&LTE_EVB_User_Guide |
| [2] Quectel_BG77xA-GL&BG95xA-GL_QCFG_AT_Commands_Manual |
| [3] Quectel_BG77xA-GL&BG95xA-GL_AT_Commands_Manual |
| [4] Quectel_BG770A-GL&BG95xA-GL_GNSS_Application_Note |
| [5] Quectel_RF_Layout_Application_Note |
| [6] Quectel_Module_Secondary_SMT_Application_Note |
| [7] Quectel_BG950A-GL&BG951A-GL_TE-A_User_Guide |

**Table 64: Terms and Abbreviations**

| Abbreviation | Description |
|---|---|
| ADC | Analog to Digital Converter |
| BDS | BeiDou Navigation Satellite System |
| Balun | Balanced to Unbalanced |
| bps | bit(s) per second |
| CHAP | Challenge Handshake Authentication Protocol |
| CoAP | Constrained Application Protocol |
| CTS | Clear to Send |
| DFOTA | Delta Firmware Upgrade Over-the-Air |
| DL | Downlink |

| | |
|---|---|
| DRX | Discontinuous Reception |
| EGSM | Extended GSM (Global System for Mobile Communications) |
| e-I-DRX | Extended Idle Mode Discontinuous Reception |
| EPC | Evolved Packet Core |
| ESD | Electrostatic Discharge |
| EVB | Evaluation Board |
| FDD | Frequency Division Duplex |
| FTP(S) | FTP over SSL |
| GNSS | Global Navigation Satellite System |
| GLONASS | Global Navigation Satellite System (Russia) |
| GPIO | General-Purpose Input/Output |
| GPS | Global Positioning System |
| GRFC | Generic RF Controller |
| HD | Half Duplex |
| HSS | Home Subscriber Server |
| I/O | Input/Output |
| I2C | Inter-Integrated Circuit |
| Inom | Nominal Current |
| LDO | Low-Dropout Regulator |
| LED | Light Emitting Diode |
| LGA | Land Grid Array |
| LNA | Low Noise Amplifier |
| LPF | Low Pass Filter |
| LPWA | Low-Power Wide-Area (Network) |
| LTE | Long Term Evolution |

| | |
|---|---|
| LwM2M | Lightweight M2M |
| ME | Mobile Equipment |
| MO | Mobile Originated |
| MQTT | Message Queuing Telemetry Transport |
| MSL | Moisture Sensitivity Levels |
| MT | Mobile Terminated |
| NITZ | Network Identity and Time Zone |
| NMEA | NMEA (National Marine Electronics Association) 0183 Interface Standard |
| PA | Power Amplifier |
| PAP | Password Authentication Protocol |
| PCB | Printed Circuit Board |
| PDU | Protocol Data Unit |
| PING | Packet Internet Groper |
| PMU | Power Management Unit |
| POS | Point of Sale |
| PPP | Point-to-Point Protocol |
| PSM | Power Saving Mode |
| RAU | Routing Area Update |
| RF | Radio Frequency |
| RFIC | Radio Frequency Integrated Circuit |
| RHCP | Right Hand Circularly Polarized |
| RoHS | Restriction of Hazardous Substances |
| RTS | Request to Send |
| SAW | Surface Acoustic Wave |
| SMD | Surface Mount Device |

| | |
|---|---|
| SMS | Short Message Service |
| SSL | Secure Sockets Layer |
| TAU | Tracking Area Update |
| TCP | Transmission Control Protocol |
| TCXO | Temperature Complementary Crystal Oscillator |
| TLS | Transport Layer Security |
| TTFF | Time to First Fix |
| Tx | Transmit |
| UART | Universal Asynchronous Receiver/Transmitter |
| UDP | User Datagram Protocol |
| UL | Uplink |
| UE | User Equipment |
| URC | Unsolicited Result Code |
| (U)SIM | (Universal) Subscriber Identity Module |
| Vmax | Maximum Voltage |
| Vnom | Nominal Voltage |
| Vmin | Minimum Voltage |
| $V_{IH}$max | Maximum High-level Input Voltage |
| $V_{IH}$min | Minimum High-level Input Voltage |
| $V_{IL}$max | Maximum Low-level Input Voltage |
| $V_{IL}$min | Minimum Low-level Input Voltage |
| $V_{OH}$max | Maximum High-level Output Voltage |
| $V_{OH}$min | Minimum High-level Output Voltage |
| $V_{OL}$max | Maximum Low-level Output Voltage |
| VSWR | Voltage Standing Wave Ratio |

**CE Statement**

The minimum distance between the user and/or any bystander and the radiating structure of the transmitter is 20cm.

Hereby, We, Quectel Wireless Solutions Co., Ltd. declares that the radio equipment type BG953A-GL is in compliance with the Directive 2014/53/EU.

The full text of the EU declaration of conformity is available at the following internet address:

Building 5, Shanghai Business Park Phase III (Area B), No.1016 Tianlin Road, Minhang District, Shanghai 200233, China

https://www.quectel.com/support/downloadb/TechnicalDocuments.htm

Legal InformationThis device may be operated in all member states of the EU.Observe national and local regulations where the device is used.

**FCC Certification Requirements.**

According to the definition of mobile and fixed device is described in Part 2.1091(b), this device is a mobile device.

And the following conditions must be met:

1. This Modular Approval is limited to OEM installation for mobile and fixed applications only. The antenna installation and operating configurations of this transmitter, including any applicable source-based time-averaging duty factor, antenna gain and cable loss must satisfy MPE categorical Exclusion Requirements of 2.1091.

2. The EUT is a mobile device; maintain at least a 20 cm separation between the EUT and the user's body and must not transmit simultaneously with any other antenna or transmitter.

3.A label with the following statements must be attached to the host end product: This device contains FCC ID: XMR2023BG953AGL.

4.To comply with FCC regulations limiting both maximum RF output power and human exposure to RF radiation, maximum antenna gain (including cable loss) must not exceed:

- ❒ Catm LTE Band2/25:⩽11.000dBi
- ❒ Catm LTE Band4/66:⩽8.000dBi
- ❒ Catm LTE Band5/26:⩽12.541dBi

- ❒ Catm LTE Band12:⩽11.798dBi
- ❒ Catm LTE Band13:⩽12.214dBi
- ❒ NB LTE Band2/25:⩽11.000dBi
- ❒ NB LTE Band4/66:⩽8.000dBi
- ❒ NB LTE Band5:⩽12.541 dBi
- ❒ NB LTE Band12:⩽11.798dBi
- ❒ NB LTE Band13:⩽12.214dBi

5. This module must not transmit simultaneously with any other antenna or transmitter

6. The host end product must include a user manual that clearly defines operating requirements and conditions that must be observed to ensure compliance with current FCC RF exposure guidelines.

For portable devices, in addition to the conditions 3 through 6 described above, a separate approval is required to satisfy the SAR requirements of FCC Part 2.1093

If the device is used for other equipment that separate approval is required for all other operating configurations, including portable configurations with respect to 2.1093 and different antenna configurations.

For this device, OEM integrators must be provided with labeling instructions of finished products. Please refer to KDB784748 D01 v07, section 8. Page 6/7 last two paragraphs:

A certified modular has the option to use a permanently affixed label, or an electronic label. For a permanently affixed label, the module must be labeled with an FCC ID - Section 2.926 (see 2.2 Certification (labeling requirements) above). The OEM manual must provide clear instructions explaining to the OEM the labeling requirements, options and OEM user manual instructions that are required (see next paragraph).

For a host using a certified modular with a standard fixed label, if (1) the module's FCC ID is not visible when installed in the host, or (2) if the host is marketed so that end users do not have straightforward commonly used methods for access to remove the module so that the FCC ID of the module is visible; then an additional permanent label referring to the enclosed module:"Contains Transmitter Module FCC ID: XMR2023BG953AGL" or "Contains FCC ID: XMR2023BG953AGL" must be used. The host OEM

user manual must also contain clear instructions on how end users can find and/or access the module and the FCC ID.

The final host / module combination may also need to be evaluated against the FCC Part 15B criteria for unintentional radiators in order to be properly authorized for operation as a Part 15 digital device.

The user's manual or instruction manual for an intentional or unintentional radiator shall caution the user that changes or modifications not expressly approved by the party responsible for compliance could void the user's authority to operate the equipment. In cases where the manual is provided only in a form other than paper, such as on a computer disk or over the Internet, the information required by this section may be included in the manual in that alternative form, provided the user can reasonably be expected to have the capability to access information in that form.

This device complies with part 15 of the FCC Rules. Operation is subject to the following two conditions: (1) This device may not cause harmful interference, and (2) this device must accept any interference received, including interference that may cause undesired operation.

Changes or modifications not expressly approved by the manufacturer could void the user's authority to operate the equipment.

### IC Statement

IRSS-GEN

"This device complies with Industry Canada's licence-exempt RSSs. Operation is subject to the following two conditions: (1) This device may not cause interference; and (2) This device must accept any interference, including interference that may cause undesired operation of the device." or "Le présent appareil est conforme aux CNR d'Industrie Canada applicables aux appareils radio exempts de licence. L'exploitation est autorisée aux deux conditions suivantes :

1) l'appareil ne doit pas produire de brouillage; 2) l'utilisateur de l'appareil doit accepter tout brouillage radioélectrique subi, même si le brouillage est susceptible d'en compromettre le fonctionnement."

Déclaration sur l'exposition aux rayonnements RF

The EUT is a mobile device; maintain at least a 20 cm separation between the EUT and the user's body and must not transmit simultaneously with any other antenna or transmitter.

L'autre utilisé pour l'émetteur doit être installé pour fournir une distance de séparation d'au moins 20 cm de toutes les personnes et ne doit pas être colocalisé ou fonctionner conjointement avec une autre antenne ou un autre émetteur.

To comply with IC regulations limiting both maximum RF output power and human exposure to RF radiation, maximum antenna gain (including cable loss) must not exceed:

- ❒ Catm LTE Band2/25:≤11.000dBi
- ❒ Catm LTE Band4/66:≤8.000dBi
- ❒ Catm LTE Band5/26:≤12.541dBi
- ❒ Catm LTE Band12:≤11.798dBi
- ❒ Catm LTE Band13:≤12.214dBi
- ❒ Catm LTE Band85:≤11.798dBi
- ❒ NB LTE Band2/25:≤11.000dBi
- ❒ NB LTE Band4/66:≤8.000dBi
- ❒ NB LTE Band5:≤12.541 dBi
- ❒ NB LTE Band12:≤11.798dBi
- ❒ NB LTE Band13:≤12.214dBi

The host product shall be properly labelled to identify the modules within the host product.

The Innovation, Science and Economic Development Canada certification label of a module shall be clearly visible at all times when installed in the host product; otherwise, the host product must be

labeled to display the Innovation, Science and Economic Development Canada certification number for the module, preceded by the word “Contains” or similar wording expressing the same meaning, as follows:

“Contains IC: 10224A-023BG953AGL” or “where: 10224A-023BG953AGL is the module’s certification number”.

Le produit hôte doit être correctement étiqueté pour identifier les modules dans le produit hôte.

L'étiquette de certification d'Innovation, Sciences et Développement économique Canada d'un module doit être clairement visible en tout temps lorsqu'il est installédans le produit hôte; sinon, le produit hôte doit porter une étiquette indiquant le numéro de certification d'Innovation, Sciences et Développement économique Canada pour le module, précédé du mot «Contient» ou d'un libellé semblable exprimant la même signification, comme suit:"Contient IC: 10224A-023BG953AGL " ou "où: 10224A-023BG953AGL est le numéro de certification du module.