FCM242D

Hardware Design

Wi-Fi&Bluetooth Module Series

Version: 1.0.0

Date: 2023-07-17

Status: Preliminary

At Quectel, our aim is to provide timely and comprehensive services to our customers. If you require any assistance, please contact our headquarters:

Quectel Wireless Solutions Co., Ltd.
Building 5, Shanghai Business Park Phase III (Area B), No.1016 Tianlin Road, Minhang District, Shanghai 200233, China
Tel: +86 21 5108 6236
Email: info@quectel.com

Or our local offices. For more information, please visit:
http://www.quectel.com/support/sales.htm.

For technical support, or to report documentation errors, please visit:
http://www.quectel.com/support/technical.htm.
Or email us at: support@quectel.com.

Legal Notices

We offer information as a service to you. The provided information is based on your requirements and we make every effort to ensure its quality. You agree that you are responsible for using independent analysis and evaluation in designing intended products, and we provide reference designs for illustrative purposes only. Before using any hardware, software or service guided by this document, please read this notice carefully. Even though we employ commercially reasonable efforts to provide the best possible experience, you hereby acknowledge and agree that this document and related services hereunder are provided to you on an “as available” basis. We may revise or restate this document from time to time at our sole discretion without any prior notice to you.

Use and Disclosure Restrictions

License Agreements

Documents and information provided by us shall be kept confidential, unless specific permission is granted. They shall not be accessed or used for any purpose except as expressly provided herein.

Copyright

Our and third-party products hereunder may contain copyrighted material. Such copyrighted material shall not be copied, reproduced, distributed, merged, published, translated, or modified without prior written consent. We and the third party have exclusive rights over copyrighted material. No license shall be granted or conveyed under any patents, copyrights, trademarks, or service mark rights. To avoid ambiguities, purchasing in any form cannot be deemed as granting a license other than the normal non-exclusive, royalty-free license to use the material. We reserve the right to take legal action for noncompliance with abovementioned requirements, unauthorized use, or other illegal or malicious use of the material.

Trademarks

Except as otherwise set forth herein, nothing in this document shall be construed as conferring any rights to use any trademark, trade name or name, abbreviation, or counterfeit product thereof owned by Quectel or any third party in advertising, publicity, or other aspects.

Third-Party Rights

This document may refer to hardware, software and/or documentation owned by one or more third parties ("third-party materials"). Use of such third-party materials shall be governed by all restrictions and obligations applicable thereto.

We make no warranty or representation, either express or implied, regarding the third-party materials, including but not limited to any implied or statutory, warranties of merchantability or fitness for a particular purpose, quiet enjoyment, system integration, information accuracy, and non-infringement of any third-party intellectual property rights with regard to the licensed technology or use thereof. Nothing herein constitutes a representation or warranty by us to either develop, enhance, modify, distribute, market, sell, offer for sale, or otherwise maintain production of any our products or any other hardware, software, device, tool, information, or product. We moreover disclaim any and all warranties arising from the course of dealing or usage of trade.

Privacy Policy

To implement module functionality, certain device data are uploaded to Quectel's or third-party's servers, including carriers, chipset suppliers or customer-designated servers. Quectel, strictly abiding by the relevant laws and regulations, shall retain, use, disclose or otherwise process relevant data for the purpose of performing the service only or as permitted by applicable laws. Before data interaction with third parties, please be informed of their privacy and data security policy.

Disclaimer

a) We acknowledge no liability for any injury or damage arising from the reliance upon the information.
b) We shall bear no liability resulting from any inaccuracies or omissions, or from the use of the information contained herein.
c) While we have made every effort to ensure that the functions and features under development are free from errors, it is possible that they could contain errors, inaccuracies, and omissions. Unless otherwise provided by valid agreement, we make no warranties of any kind, either implied or express, and exclude all liability for any loss or damage suffered in connection with the use of features and functions under development, to the maximum extent permitted by law, regardless of whether such loss or damage may have been foreseeable.
d) We are not responsible for the accessibility, safety, accuracy, availability, legality, or completeness of information, advertising, commercial offers, products, services, and materials on third-party websites and third-party resources.

Copyright © Quectel Wireless Solutions Co., Ltd. 2023. All rights reserved.

Safety Information

The following safety precautions must be observed during all phases of operation, such as usage, service or repair of any terminal or mobile incorporating the module. Manufacturers of the terminal should notify users and operating personnel of the following safety information by incorporating these guidelines into all manuals of the product. Otherwise, Quectel assumes no liability for customers' failure to comply with these precautions.

	Full attention must be paid to driving at all times in order to reduce the risk of an accident. Using a mobile while driving (even with a handsfree kit) causes distraction and can lead to an accident. Please comply with laws and regulations restricting the use of wireless devices while driving.
	Switch off the terminal or mobile before boarding an aircraft. The operation of wireless appliances in an aircraft is forbidden to prevent interference with communication systems. If there is an Airplane Mode, it should be enabled prior to boarding an aircraft. Please consult the airline staff for more restrictions on the use of wireless devices on an aircraft.
	Wireless devices may cause interference on sensitive medical equipment, so please be aware of the restrictions on the use of wireless devices when in hospitals, clinics or other healthcare facilities.
	Terminals or mobiles operating over radio signal and cellular network cannot be guaranteed to connect in certain conditions, such as when the mobile bill is unpaid or the (U)SIM card is invalid. When emergency help is needed in such conditions, use emergency call if the device supports it. In order to make or receive a call, the terminal or mobile must be switched on in a service area with adequate cellular signal strength. In an emergency, the device with emergency call function cannot be used as the only contact method considering network connection cannot be guaranteed under all circumstances.
	The terminal or mobile contains a transceiver. When it is ON, it receives and transmits radio frequency signals. RF interference can occur if it is used close to TV sets, radios, computers or other electric equipment.
	In locations with explosive or potentially explosive atmospheres, obey all posted signs and turn off wireless devices such as mobile phone or other terminals. Areas with explosive or potentially explosive atmospheres include fueling areas, below decks on boats, fuel or chemical transfer or storage facilities, and areas where the air contains chemicals or particles such as grain, dust or metal powders.

About the Document

Revision History

Version	Date	Author	Description
-	2023-07-17	Roshan WENG/Neil CHENG	Creation of the document
1.0.0	2023-07-17	Roshan WENG/Neil CHENG	Preliminary

Contents

Safety Information **3**

About the Document **4**

Contents **5**

Table Index **7**

Figure Index **8**

1 Introduction **9**
1.1. Special Mark 9

2 Product Overview **10**
2.1. Key Features 11

3 Application Interfaces **12**
3.1. Pin Assignment 12
3.2. Pin Description 13
3.3. GPIO Multiplexing 16
3.4. Application Interfaces 18
3.4.1. UARTs 18
3.4.2. SPI 19
3.4.3. I2C Interface 20
3.4.4. PWM Interfaces 21
3.4.5. ADC Interfaces 21

4 Operating Characteristics **23**
4.1. Power Supply 23
4.1.1. Reference Design for Power Supply 23
4.2. Turn On 24
4.3. Reset 24

5 RF Performances **26**
5.1. Wi-Fi Performances 26
5.2. Bluetooth Performances 26
5.3. Antenna/Antenna Interfaces 27
5.3.1. Pin Antenna Interface (ANT_WIFI/BT) 27
5.3.1.1. Reference Design 27
5.3.1.2. Antenna Design Requirements 28
5.3.1.3. RF Routing Guidelines 28
5.3.2. PCB Antenna 30
5.3.3. RF Coaxial Connector 32
5.3.3.1. Receptacle Specifications 32
5.3.3.2. Antenna Connector Installation 33
5.3.3.3. Assemble Coaxial Cable Plug Manually 34

5.3.3.4. Assemble Coaxial Cable Plug with Jig 35
5.3.3.5. Recommended Manufacturers of RF Connector and Cable 35

6 Electrical Characteristics & Reliability 36
6.1. Absolute Maximum Ratings 36
6.2. Power Supply Ratings 36
6.3. Digital I/O Characteristics 37
6.4. ESD Protection 37

7 Mechanical Information 38
7.1. Mechanical Dimensions 38
7.2. Recommended Footprint 40
7.3. Top and Bottom Views 41

8 Storage, Manufacturing & Packaging 43
8.1. Storage Conditions 43
8.2. Manufacturing and Soldering 44
8.3. Packaging Specifications 46
8.3.1. Carrier Tape 46
8.3.2. Plastic Reel 47
8.3.3. Mounting Direction 47
8.3.4. Packaging Process 48

9 Appendix References 49

Table Index

Table 1 : Special Mark 9
Table 2 : Basic Information 10
Table 3 : Key Features 11
Table 4 : I/O Parameter Description 13
Table 5 : Pin Description 13
Table 6 : GPIO Multiplexing 16
Table 7 : Pin Definition of UARTs 18
Table 8 : Pin Definition of SPI 19
Table 9 : Pin Definition of I2C Interface 20
Table 10 : Pin Definition of PWM Interfaces 21
Table 11 : Pin Definition of ADC Interfaces 21
Table 12 : ADC Features 22
Table 13 : Pin Definition of Power Supply and GND Pins 23
Table 14 : Pin Definition of CHIP_EN 24
Table 15 : Wi-Fi Performances 26
Table 16 : Bluetooth Performances 26
Table 17 : ANT_WIFI/BT Pin Definition 27
Table 18 : Antenna Design Requirements 28
Table 19 : PCB Antenna Specifications 30
Table 20 : Major Specifications of the RF Connector 33
Table 21 : Absolute Maximum Ratings (Unit: V) 36
Table 22 : Module Power Supply Ratings (Unit: V) 36
Table 25 : VBAT I/O Characteristics (Unit: V) 37
Table 26 : ESD Characteristics (Unit: kV) 37
Table 27 : Recommended Thermal Profile Parameters 45
Table 28 : Carrier Tape Dimension Table (Unit: mm) 46
Table 29 : Plastic Reel Dimension Table (Unit: mm) 47
Table 30 : Reference Documents 49
Table 31 : Terms and Abbreviations 49

Figure Index

Figure 2 : Pin Assignment (Top View) 12
Figure 3 : UART1 Connection 18
Figure 4 : UART2 Reference Design 19
Figure 5 : SPI Connection 20
Figure 6 : VBAT Reference Circuit 23
Figure 7 : Turn-on Timing 24
Figure 8 : Reference Circuit of CHIP_EN by Using A Driving Circuit 25
Figure 9 : Reference Circuit of RESET with A Button 25
Figure 10 : Reset Timing 25
Figure 11 : RF Antenna Reference Design 28
Figure 12 : Microstrip Design on a 2-layer PCB 29
Figure 13 : Coplanar Waveguide Design on a 2-layer PCB 29
Figure 14 : Coplanar Waveguide Design on a 4-layer PCB (Layer 3 as Reference Ground) 29
Figure 15 : Coplanar Waveguide Design on a 4-layer PCB (Layer 4 as Reference Ground) 29
Figure 16 : Keepout Area on Motherboard 31
Figure 17 : Prohibited Area for Routing 31
Figure 18 : Dimensions of the Receptacle (Unit: mm) 32
Figure 19 : Space Factor of the Mated Connectors (Unit: mm) 33
Figure 20 : Plug in a Coaxial Cable Plug 34
Figure 21 : Pull out a Coaxial Cable Plug 34
Figure 22 : Install the Coaxial Cable Plug with Jig 35
Figure 23 : Top and Side Dimensions 38
Figure 24 : Bottom Dimensions (Bottom View) 39
Figure 25 : Recommended Footprint 40
Figure 26 : Top and Bottom Views (Pin Antenna Interface) 41
Figure 27 : Top and Bottom Views (PCB Antenna) 41
Figure 28 : Top and Bottom Views (RF Coaxial Connector) 42
Figure 29 : Recommended Reflow Soldering Thermal Profile 44
Figure 30 : Tape Specifications 46
Figure 31 : Plastic Reel Dimension Drawing 47
Figure 32 : Mounting Direction 47
Figure 33 : Packaging Process 48

1 Introduction

QuecOpen® is a solution where the module acts as the main processor. Constant transition and evolution of both the communication technology and the market highlight its merits. It can help you to:

- Realize embedded applications' quick development and shorten product R&D cycle
- Simplify circuit and hardware structure design to reduce engineering costs
- Miniaturize products
- Reduce product power consumption
- Apply OTA technology
- Enhance product competitiveness and price-performance ratio

This document defines FCM242D in QuecOpen® solution and describes its air interfaces and hardware interfaces, which are connected with your applications. The document provides a quick insight into interface specifications, RF performance, electrical and mechanical specifications, as well as other related information of the module.

1.1. Special Mark

Table 1: Special Mark

Mark	Definition
[…]	Brackets ([…]) used after a pin enclosing a range of numbers indicate all pins of the same type. For example, SDIO_DATA[0:3] refers to all four SDIO pins: SDIO_DATA0, SDIO_DATA1, SDIO_DATA2, and SDIO_DATA3.

2 Product Overview

FCM242D is a Wi-Fi 4 and Bluetooth module for smart-home and industrial IoT scenarios supporting IEEE 802.11b/g/n and BLE 5.2 standards. It provides multiple interfaces including UART, GPIO, SPI, I2C, ADC and PWM for various applications.

FCM242D is an SMD LCC module with compact packaging. It includes:

- 160 MHz MCU processor
- Built-in 288 KB RAM and 2 MB Flash
- Support secondary development

Table 2: Basic Information

FCM242D	
Packaging type	LCC
Pin counts	29
Dimensions	(20 ±0.2) mm × (18 ±0.2) mm × (2.05 ±0.2) mm
Weight	Approx. 1.09 g

2.1. Key Features

Table 3: Key Features

Basic Information	
Protocols and Standard	● Wi-Fi Protocols: IEEE 802.11b/g/n ● Bluetooth protocol: BLE 5.2 ● All hardware components are fully compliant with EU RoHS directive
Power Supply	**VBAT Power Supply:** ● 3.0–3.6 V ● Typ.: 3.3 V
Temperature Ranges [1]	● **Design Solution 1:** − Operating temperature: -40 to +85 °C − Storage temperature: -45 to +95 °C ● **Design Solution 2:** − Operating temperature: -40 to +105 °C − Storage temperature: -45 °C to +115 °C
EVB Kit	FCM242D TE-B [2]
Antenna/Antenna Interface	
Antenna/Antenna Interfaces [3]	● Pin antenna interface (ANT_WIFI/BT) ● PCB antenna ● RF coaxial connector ● 50 Ω characteristic impedance
Application Interface [4]	
Application Interfaces	UART, GPIO, SPI, I2C PWM, ADC

[1] The module is provided with two temperature design solutions. For more details, contact Quectel Technical Support. Within the operating temperature range, the module's related performance meets IEEE and Bluetooth specifications.

[3] The module is provided in one of the three antenna/antenna interface designs. For more details, contact Quectel Technical Support.

[4] For more details about the interfaces, see ***Chapter 3.3*** and ***Chapter 3.4***.

3 Application Interfaces

3.1. Pin Assignment

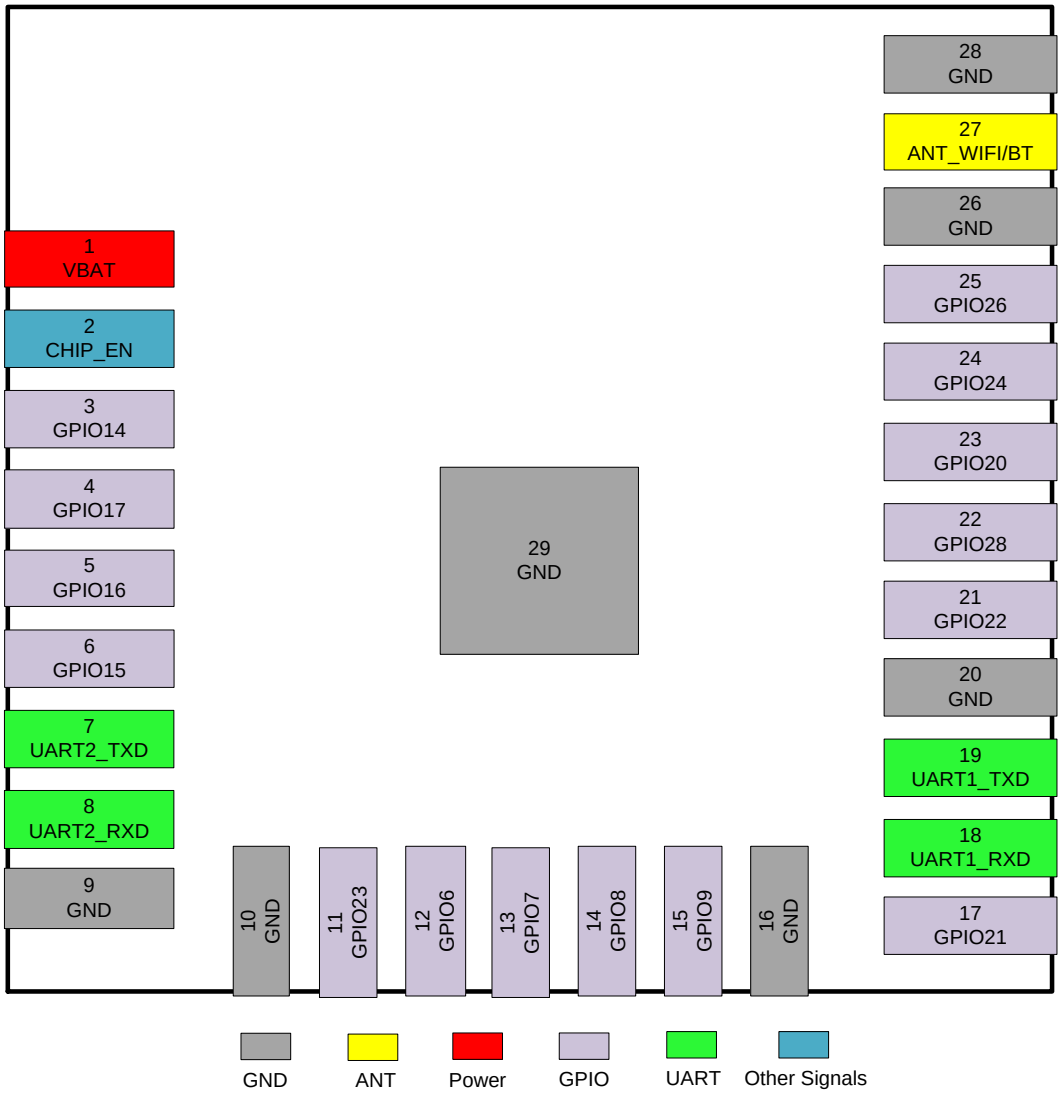

Figure 1: Pin Assignment (Top View)

NOTE

1. Keep all RESERVED and unused pins unconnected.
2. All GND pins should be connected to ground.
3. The module provides 2 UART and 15 GPIO interfaces by default. In the case of multiplexing, it supports up to 19 GPIO interfaces, 1 SPI, 2 I2C interfaces, 6 PWM interfaces and 6 ADC interfaces. For more details, see ***Chapter 3.3*** and ***3.4***.

3.2. Pin Description

Table 4: I/O Parameter Description

Type	Description
AIO	Analog Input/Output
DI	Digital Input
DO	Digital Output
DIO	Digital Input/Output
PI	Power Input

DC characteristics include power domain and rated current.

Table 5: Pin Description

Power Supply					
Pin Name	**Pin No.**	**I/O**	**Description**	**DC Characteristics**	**Comment**
VBAT	1	PI	Power supply for the module	Vmax = 3.6 V Vmin = 3.0 V Vnom = 3.3 V	It must be provided with sufficient current of at least 0.6 A.
GND	9, 10, 16, 20, 26, 28, 29				
Control Signal					
Pin Name	**Pin No.**	**I/O**	**Description**	**DC Characteristics**	**Comment**

CHIP_EN	2	DI	Enable the module	VBAT	Hardware enable. Internally pulled up to 3.3 V. Active high.
UARTs					
Pin Name	**Pin No.**	**I/O**	**Description**	**DC Characteristics**	**Comment**
UART1_TXD	19	DO	UART1 transmit	VBAT	
UART1_RXD	18	DI	UART1 receive		
UART2_TXD	7	DO	UART2 transmit		
UART2_RXD	8	DI	UART2 receive		
GPIO Interfaces					
Pin Name	**Pin No.**	**I/O**	**Description**	**DC Characteristics**	**Comment**
GPIO14	3	DIO	General-purpose input/output	VBAT	Interrupt wakeup.
GPIO17	4	DIO	General-purpose input/output		
GPIO16	5	DIO	General-purpose input/output		
GPIO15	6	DIO	General-purpose input/output		
GPIO23	11	DIO	General-purpose input/output		
GPIO6	12	DIO	General-purpose input/output		
GPIO7	13	DIO	General-purpose input/output		
GPIO8	14	DIO	General-purpose input/output		
GPIO9	15	DIO	General-purpose input/output		
GPIO21	17	DIO	General-purpose input/output		
GPIO22	21	DIO	General-purpose input/output		
GPIO28	22	DIO	General-purpose input/output		
GPIO20	23	DIO	General-purpose		

			input/output		
GPIO24	24	DIO	General-purpose input/output		
GPIO26	25	DIO	General-purpose input/output		
RF Antenna Interface					
Pin Name	**Pin No.**	**I/O**	**Description**	**DC Characteristics**	**Comment**
ANT_WIFI/BT	27	AIO	Wi-Fi/Bluetooth antenna interface		50 Ω characteristic impedance.

3.3. GPIO Multiplexing

The module provides 15 GPIO interfaces by default, and can support up to 19 GPIO interfaces in the case of multiplexing. Pins are defined as follows:

Table 6: GPIO Multiplexing

Pin Name	Pin No.	Alternate Function 0 (GPIO No.)	Alternate Function 1	Alternate Function 2	Alternate Function 3	Alternate Function 4
GPIO14	3	GPIO14	SPI_CLK	-	-	-
GPIO17	4	GPIO17	SPI_MISO	I2C1_SDA	-	-
GPIO16	5	GPIO16	SPI_MOSI	-	-	-
GPIO15	6	GPIO15	SPI_CS	I2C1_SCL	-	-
UART2_TXD	7	GPIO0	-	-	-	-
UART2_RXD	8	GPIO1	ADC5	-	-	-
GPIO23	11	GPIO23	-	-	-	-
GPIO6	12	GPIO6	CLK13M	PWM0	JTAG_TCK	-
GPIO7	13	GPIO7	PWM1	JTAG_TMS	-	-
GPIO8	14	GPIO8	PWM2	JTAG_TDI	CLK26M	-

GPIO9	15	GPIO9	PWM3	JTAG_TDO	-	-
GPIO21	17	GPIO21	-	-	-	-
UART1_RXD	18	GPIO10	ADC6	-	-	-
UART1_TXD	19	GPIO11	-	-	-	-
GPIO22	21	GPIO22	-	-	-	-
GPIO28	22	GPIO28	ADC4	-	-	-
GPIO20	23	GPIO20	ADC3	-	-	-
GPIO24	24	GPIO24	LPO_CLK	PWM4	I2C2_SCL	ADC2
GPIO26	25	GPIO26	PWM5	I2C2_SDA	ADC1	-

NOTE

All GPIO can be used as sleep interrupt to wake up the module which will immediately enter the operating state after being awakened.

3.4. Application Interfaces

3.4.1. UARTs

The module provides 2 UARTs by default which can all support full-duplex asynchronous serial communication at a baud rate up to 6 Mbps.

Table 7: Pin Definition of UARTs

Pin Name	Pin No.	I/O	Description
UART1_TXD	19	DO	UART1 transmit
UART1_RXD	18	DI	UART1 receive
UART2_TXD	7	DO	UART2 transmit
UART2_RXD	8	DI	UART2 receive

The UART1 can be used for download and AT command communication and the default baud rate is 115200 bps. The UART1 connection between the module and the MCU is illustrated below.

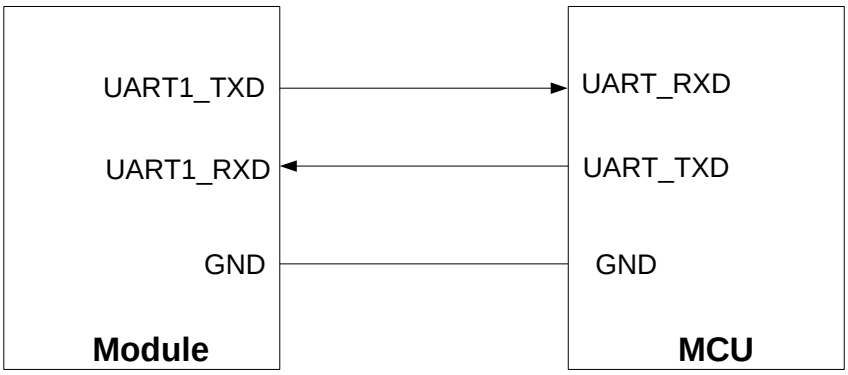

Figure 2: UART1 Connection

The UART2 can be used for the output of partial logs with the debugging tools, and the default baud rate is 921600 bps. The following is reference design of UART2.

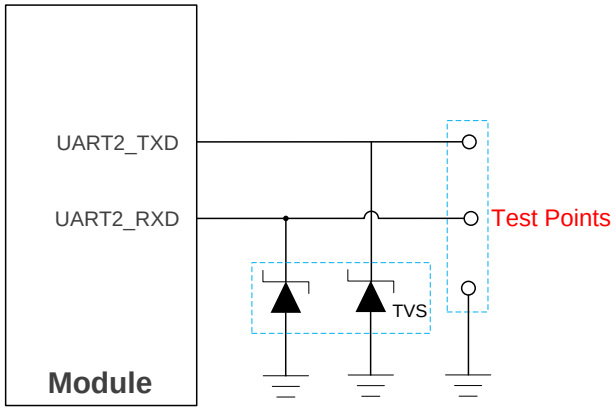

Figure 3: UART2 Reference Design

3.4.2. SPI

In the case of multiplexing, the module provides 1 SPI that supports both master and slave modes. The maximum clock frequency of the interface can reach 30 MHz in master mode, and 20 MHz in slave mode.

Table 8: Pin Definition of SPI

Pin Name	Pin No.	Multiplexing Function	I/O	Description	Comment
GPIO15	6	SPI_CS	DIO	SPI chip select	In master mode, it is an output signal; In slave mode, it is an input signal.
GPIO14	3	SPI_CLK	DIO	SPI clock	In master mode, it is an output signal; In slave mode, it is an input signal.
GPIO17	4	SPI_MISO	DIO	SPI master-in slave-out	
GPIO16	5	SPI_MOSI	DIO	SPI master-out slave-in	

The following figure shows the connection between the host and the slave:

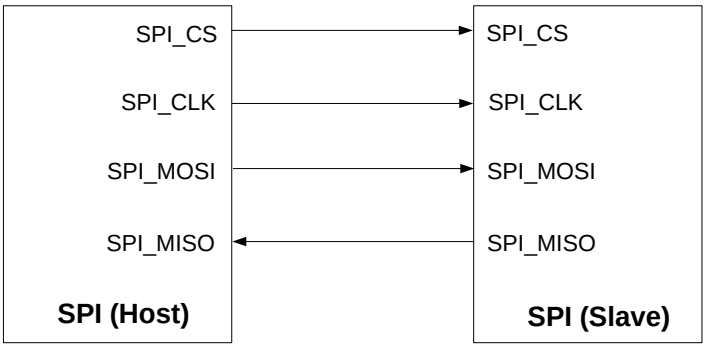

Figure 4: SPI Connection

3.4.3. I2C Interface

In the case of multiplexing the module provides up to 2 I2C interfaces which all supports the master and slave modes. The interfaces support standard (up to 100 Kbps) and fast (up to 400 Kbps) modes with 7-bit addressing. If low level on SCL or bus idle duration is greater than the software-defined threshold, it will generate an interrupt to the MCU.

Table 9: Pin Definition of I2C Interface

Pin Name	Pin No.	Multiplexing Function	I/O	Description
GPIO17	4	I2C1_SDA	DIO	I2C1 serial data
GPIO15	6	I2C1_SCL	DO	I2C1 serial clock
GPIO24	24	I2C2_SDA	DIO	I2C2 serial data
GPIO26	25	I2C2_SCL	DO	I2C2 serial clock

NOTE

Reserve 1–10 kΩ pull-up resistors to VBAT when I2C1 and I2C2 interfaces are connected to an external equipment.

3.4.4. PWM Interfaces

The module supports up to 6 32-bit PWM channels multiplexed with GPIOs.

Table 10: Pin Definition of PWM Interfaces

Pin Name	Pin No.	Multiplexing Function	I/O	Description
GPIO6	12	PWM0	DO	PWM0 out
GPIO7	13	PWM1	DO	PWM1 out
GPIO8	14	PWM2	DO	PWM2 out
GPIO9	15	PWM3	DO	PWM3 out
GPIO24	24	PWM4	DO	PWM4 out
GPIO26	25	PWM5	DO	PWM5 out

3.4.5. ADC Interfaces

In the case of multiplexing, the module supports up to 6 10-bit ADC interfaces, whose voltage range is 0–3.3 V. To improve ADC accuracy, surround ADC trace with ground.

Table 11: Pin Definition of ADC Interfaces

Pin Name	Pin No.	Multiplexing Function	I/O	Description
UART2_RXD	8	ADC5	AI	General-purpose ADC interface
UART1_RXD	18	ADC6	AI	General-purpose ADC interface
GPIO28	22	ADC4	AI	General-purpose ADC interface
GPIO20	23	ADC3	AI	General-purpose ADC interface
GPIO24	24	ADC2	AI	General-purpose ADC interface
GPIO26	25	ADC1	AI	General-purpose ADC interface

Table 12: ADC Features

Parameter	Min.	Typ.	Max.	Unit
ADC Voltage Range	0	-	3.3	V
ADC Resolution Rate	-	10	-	bit

4 Operating Characteristics

4.1. Power Supply

Power supply pin and ground pins of the module are defined in the following table.

Table 13: Pin Definition of Power Supply and GND Pins

Pin Name	Pin No.	I/O	Description	Min.	Typ.	Max.	Unit
VBAT	1	PI	Power supply for the module	3.0	3.3	3.6	V
GND	9, 10, 16, 20, 26, 28, 29						

4.1.1. Reference Design for Power Supply

The module is powered by VBAT, and it is recommended to use a power supply chip that can provide at least 0.6 A output current. For better power supply performance, it is recommended to parallel a 22 μF decoupling capacitor, and two filter capacitors (1 μF and 100 nF) near the module's VBAT pin. In addition, it is recommended to add a TVS near the VBAT to improve the surge voltage bearing capacity of the module. In principle, the longer the VBAT trace is, the wider it should be.

VBAT reference circuit is shown below:

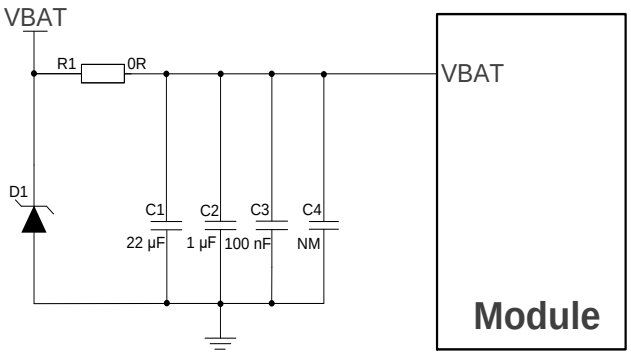

Figure 5: VBAT Reference Circuit

4.2. Turn On

After the module VBAT is powered on, keep the CHIP_EN pin at high level to realize the automatic startup of the module.

Table 14: Pin Definition of CHIP_EN

Pin Name	Pin No.	I/O	Description	Comment
CHIP_EN	2	DI	Enable the module	Hardware enable. Internally pulled up to 3.3 V. Active high.

The turn-on timing is shown below:

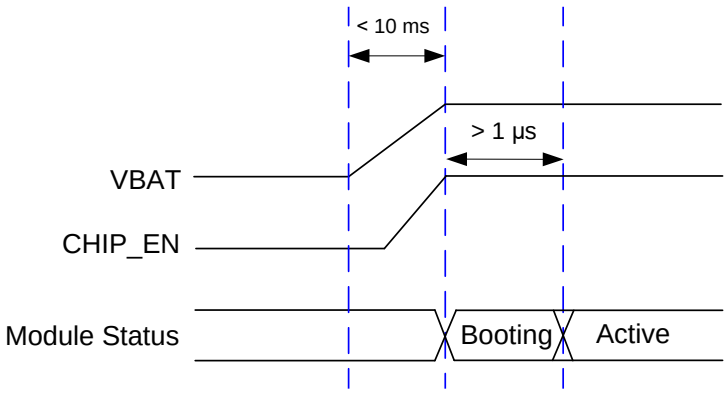

Figure 6: Turn-on Timing

4.3. Reset

When the voltage of CHIP_EN drops below 0.3 V or pull it down for at least 1 ms, the module can be reset. The reference design for hardware resetting of the module are shown below. An open collector driving circuit can be used to control the CHIP_EN pin.

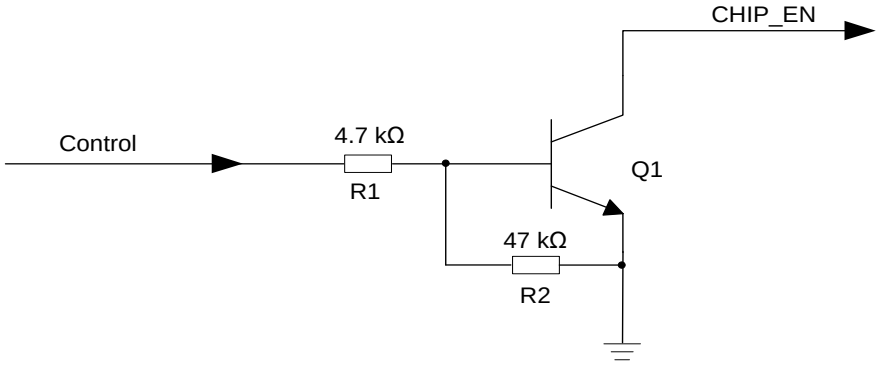

Figure 7: Reference Circuit of CHIP_EN by Using A Driving Circuit

Another way to control the CHIP_EN is by using a button directly. When pressing the button, an electrostatic strike may generate from finger. Therefore, a TVS component shall be placed near the button for ESD protection.

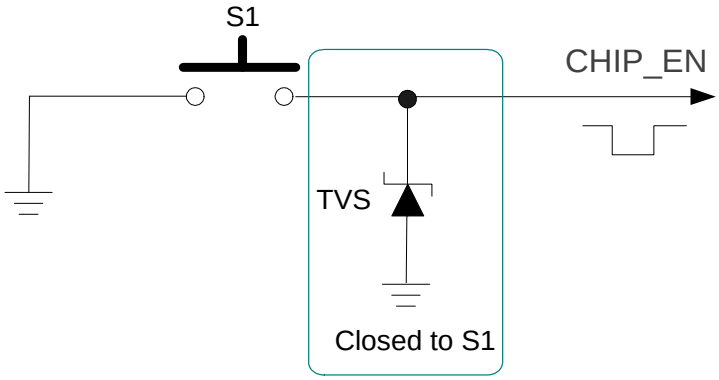

Figure 8: Reference Circuit of RESET with A Button

The module reset timing is illustrated in the following figure.

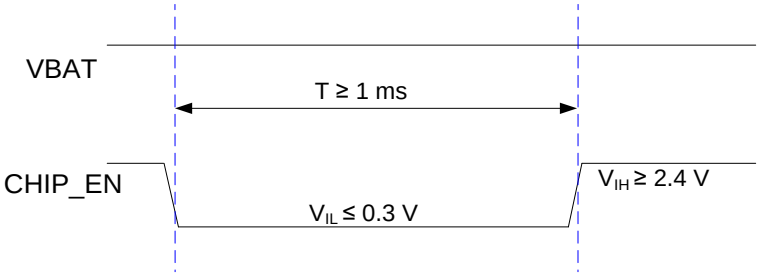

Figure 9: Reset Timing

5 RF Performances

5.1. Wi-Fi Performances

Table 15: Wi-Fi Performances

Operating Frequency
2.4 GHz: 2.400–2.4835 GHz
Modulation
DSSS, CCK, BPSK, QPSK, 16QAM, 64QAM
Operating Mode
● STA
Transmission Data Rate
● 802.11b: 1 Mbps, 2 Mbps, 5.5 Mbps, 11 Mbps ● 802.11g: 6 Mbps, 9 Mbps, 12 Mbps, 18 Mbps, 24 Mbps, 36 Mbps, 48 Mbps, 54 Mbps ● 802.11n: HT20 (MCS 0–7)

5.2. Bluetooth Performances

Table 16: Bluetooth Performances

Operating Frequency
2.400–2.4835 GHz
Modulation
GFSK
Operating Mode

BLE

5.3. Antenna/Antenna Interfaces

The module is provided in one of the three antenna/antenna interface designs: pin antenna interface (ANT_WIFI/BT), PCB antenna and RF coaxial connector. The RF coaxial connector is not available when the module is designed with ANT_BT antenna interface or PCB antenna. The impedance of antenna port is 50 Ω.

Appropriate antenna type and design should be used with matched antenna parameters according to specific application. It is required to perform a comprehensive functional test for the RF design before mass production of terminal products. The entire content of this chapter is provided for illustration only. Analysis, evaluation and determination are still necessary when designing target products.

5.3.1. Pin Antenna Interface (ANT_WIFI/BT) [5]

Table 17: ANT_WIFI/BT Pin Definition

Pin Name	Pin No.	I/O	Description	Comment
ANT_WIFI/BT	27	AIO	Wi-Fi/Bluetooth antenna interface	50 Ω characteristic impedance.

5.3.1.1. Reference Design

A circuit of the RF antenna interface is shown below. For better RF performance, it is necessary to reserve a π matching circuit and add ESD protection components. Reserved matching components such as R1, C1, C2, and D1 should be placed as close to the antenna as possible. C1, C2, and D1 are not mounted by default. The parasitic capacitance of TVS should be less than 0.05 pF and R1 is recommended to be 0 Ω.

[5] The module is provided in one of the three antenna/antenna interface designs. For more details, contact Quectel Technical Support.

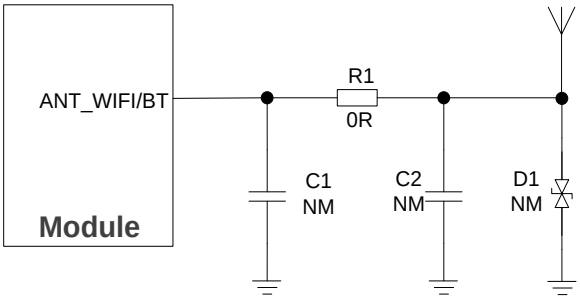

Figure 10: RF Antenna Reference Design

5.3.1.2. Antenna Design Requirements

Table 18: Antenna Design Requirements

Parameter	Requirement
Frequency Range (GHz)	2.400–2.4835
Cable Insertion Loss (dB)	< 1
VSWR	≤ 2 (Typ.)
Gain (dBi)	1 .4(Max)
Max. input power (W)	50
Input impedance (Ω)	50
Polarization type	Vertical

5.3.1.3. RF Routing Guidelines

For user's PCB, the characteristic impedance of all RF traces should be controlled to 50 Ω. The impedance of the RF traces is usually determined by the trace width (W), the materials' dielectric constant, the height from the reference ground to the signal layer (H), and the spacing between RF traces and grounds (S). Microstrip or coplanar waveguide is typically used in RF layout to control characteristic impedance. The following are reference designs of microstrip or coplanar waveguide with different PCB structures.

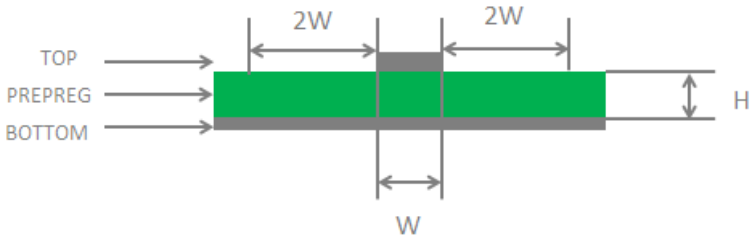

Figure 11: Microstrip Design on a 2-layer PCB

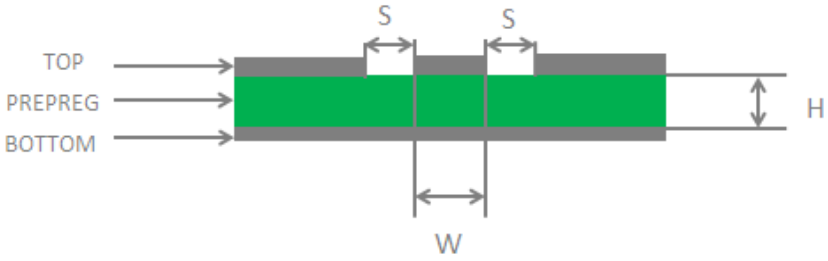

Figure 12: Coplanar Waveguide Design on a 2-layer PCB

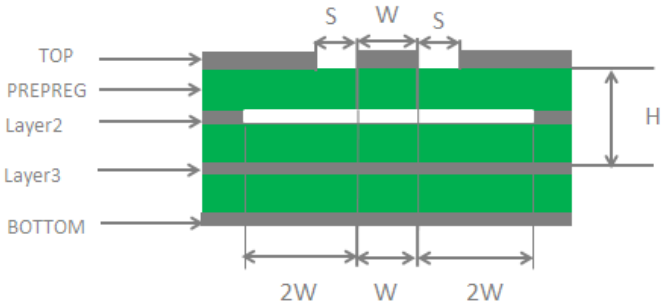

Figure 13: Coplanar Waveguide Design on a 4-layer PCB (Layer 3 as Reference Ground)

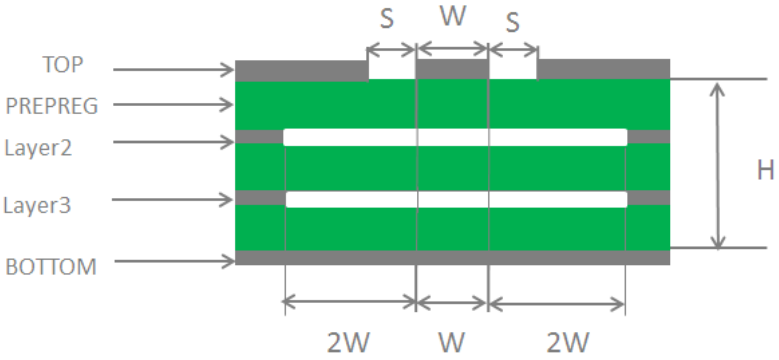

Figure 14: Coplanar Waveguide Design on a 4-layer PCB (Layer 4 as Reference Ground)

To ensure RF performance and reliability, follow the principles below in RF layout design:

- Use an impedance simulation tool to control the characteristic impedance of RF traces to 50 Ω.
- GND pins adjacent to RF pins should not be designed as thermal relief pads, and should be fully connected to the ground.
- The distance between the RF pins and the RF connector should be as short as possible and all right-angle traces should be changed to curved ones. The recommended trace angle is 135°.
- There should be clearance under the signal pin of the antenna connector or solder joint.
- The reference ground of RF traces should be complete. In addition, adding some ground vias around RF traces and the reference ground could help to improve RF performance. The distance between the ground vias and RF traces should be at least twice the width of RF signal traces (2 × W).
- Keep RF traces away from interference sources, and avoid intersection and paralleling between traces on adjacent layers.

For more details about RF layout, see ***document [2]***.

5.3.2. PCB Antenna [6]

Table 19: PCB Antenna Specifications

Parameter	Requirement
Frequency Range (GHz)	2.400–2.500
Input Impedance (Ω)	50
VSWR	≤ 2.5 (Typ.)
Gain (dBi)	1 .4(Max.)
Efficiency (Avg.)	52.9 %

When using the PCB antenna on the module, the module should be placed at the side of the motherboard. The distance between the PCB antenna and connectors, vias, traces, ethernet port and any other metal components on the motherboard should be at least 16 mm. All layers in the PCB of the motherboard under the PCB antenna should be designed as a keepout area.

[6] The module is provided in one of the three antenna/antenna interface designs. For more details, contact Quectel Technical Support.

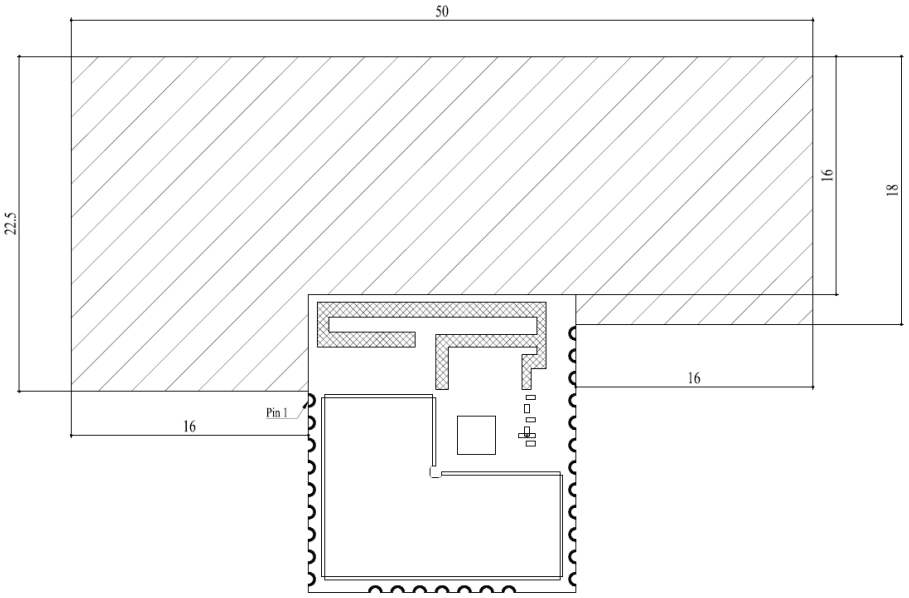

Figure 15: Keepout Area on Motherboard

Do not routing at the RF test point at the bottom of the module to ensure its performances during PCB design.

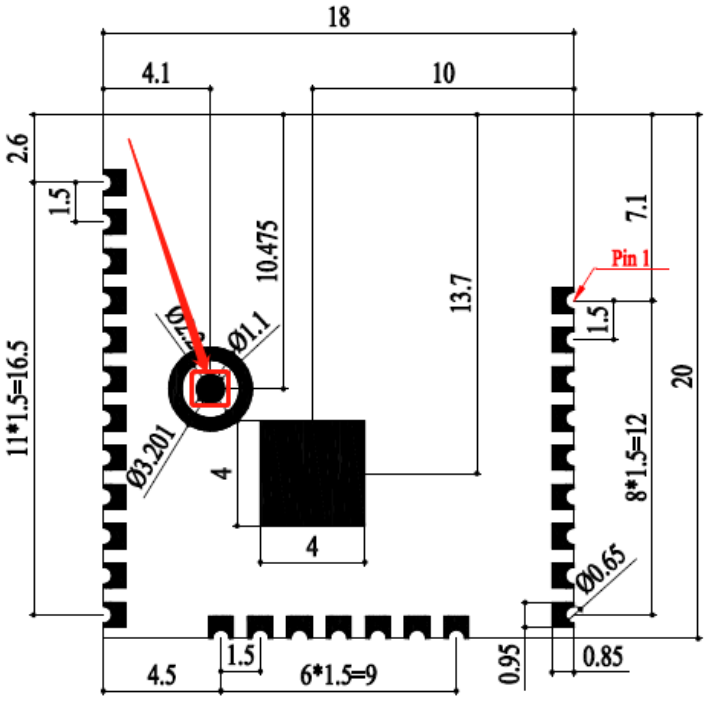

Figure 16: Prohibited Area for Routing

5.3.3. RF Coaxial Connector [7]

5.3.3.1. Receptacle Specifications

The mechanical dimensions of the receptacle supported by the module are as follows.

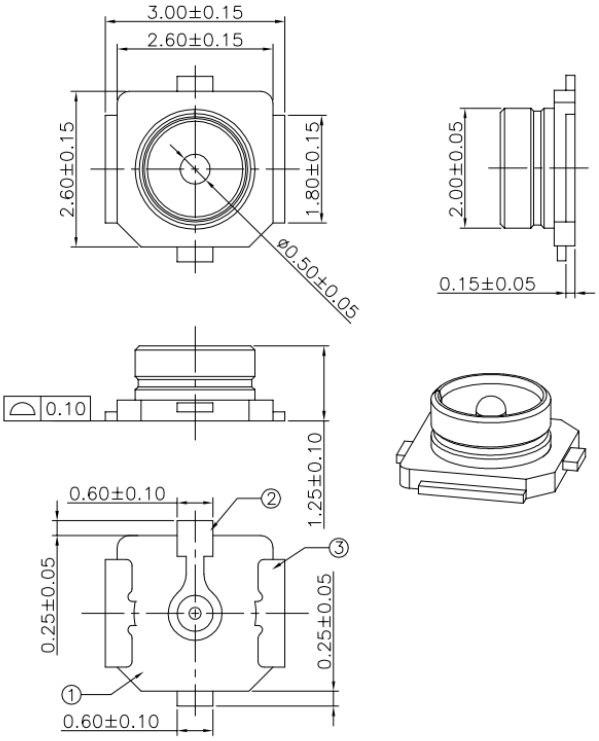

Figure 17: Dimensions of the Receptacle (Unit: mm)

[7] The module is provided in one of the three antenna/antenna interface designs. For more details, contact Quectel Technical Support.

Table 20: Major Specifications of the RF Connector

Item	Specification
Nominal Frequency Range	DC to 6 GHz
Nominal Impedance	50 Ω
Temperature Rating	-40 °C to +105 °C
Voltage Standing Wave Ratio (VSWR)	Meet the requirements of: Max. 1.3 (DC–3 GHz) Max. 1.45 (3–6 GHz)

5.3.3.2. Antenna Connector Installation

The mated plug listed in the following figure can be used to match the connector.

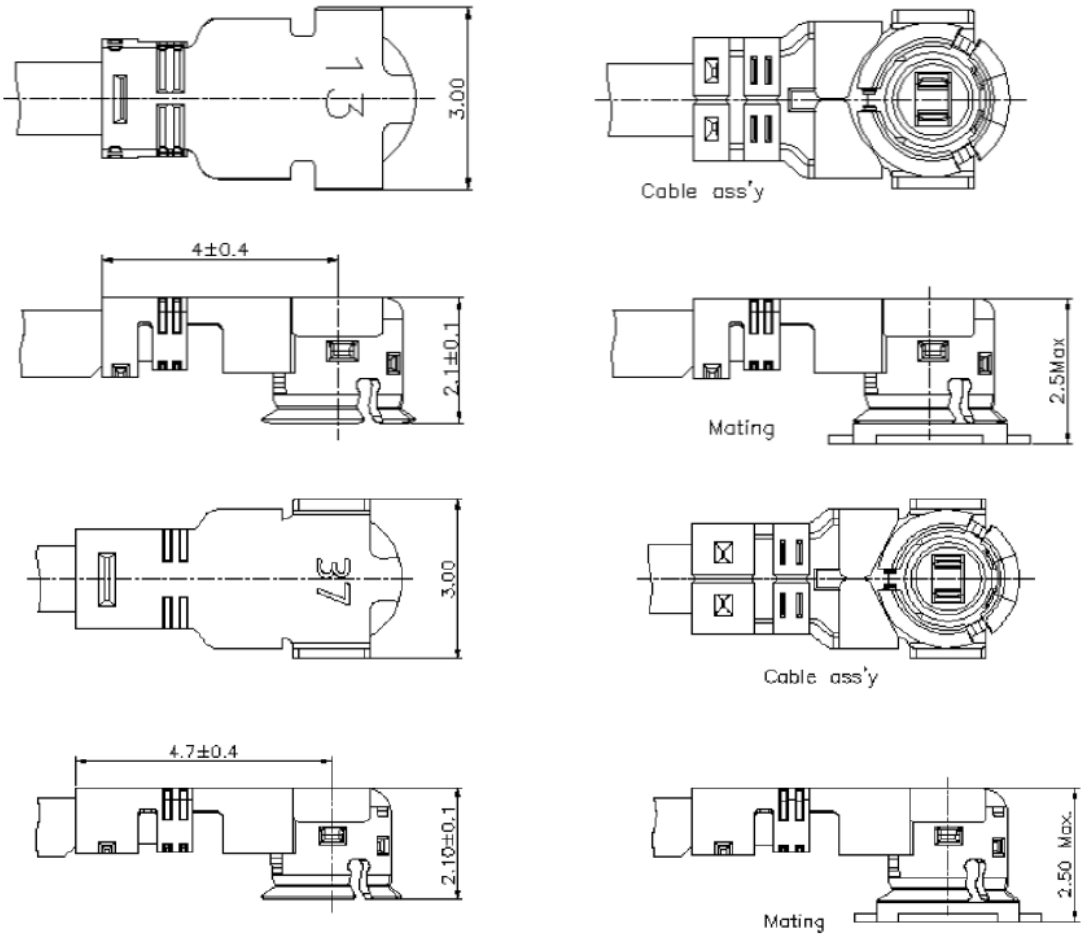

Figure 18: Space Factor of the Mated Connectors (Unit: mm)

5.3.3.3. Assemble Coaxial Cable Plug Manually

The pictures for plugging in a coaxial cable plug is shown below, θ = 90° is acceptable, while θ ≠ 90° is not.

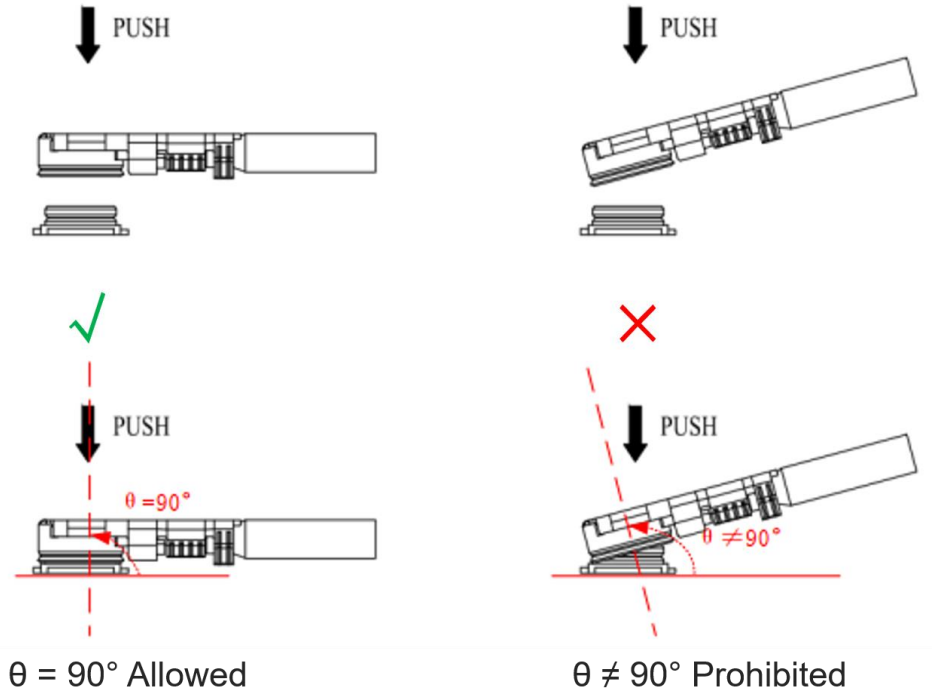

Figure 19: Plug in a Coaxial Cable Plug

The pictures of pulling out the coaxial cable plug is shown below, θ = 90° is acceptable, while θ ≠ 90° is not.

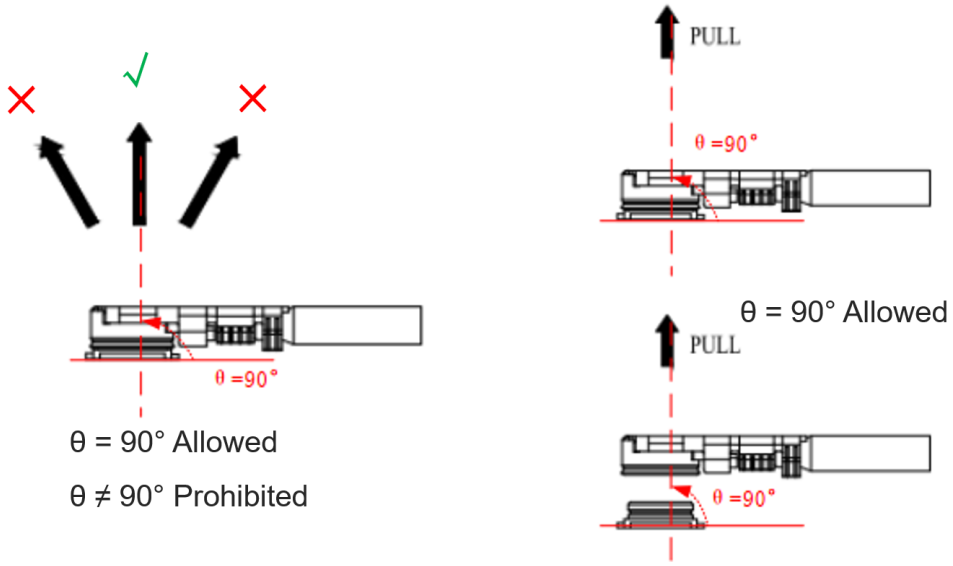

Figure 20: Pull out a Coaxial Cable Plug

5.3.3.4. Assemble Coaxial Cable Plug with Jig

The pictures of installing the coaxial cable plug with a jig is shown below, θ = 90° is acceptable, while θ ≠ 90° is not.

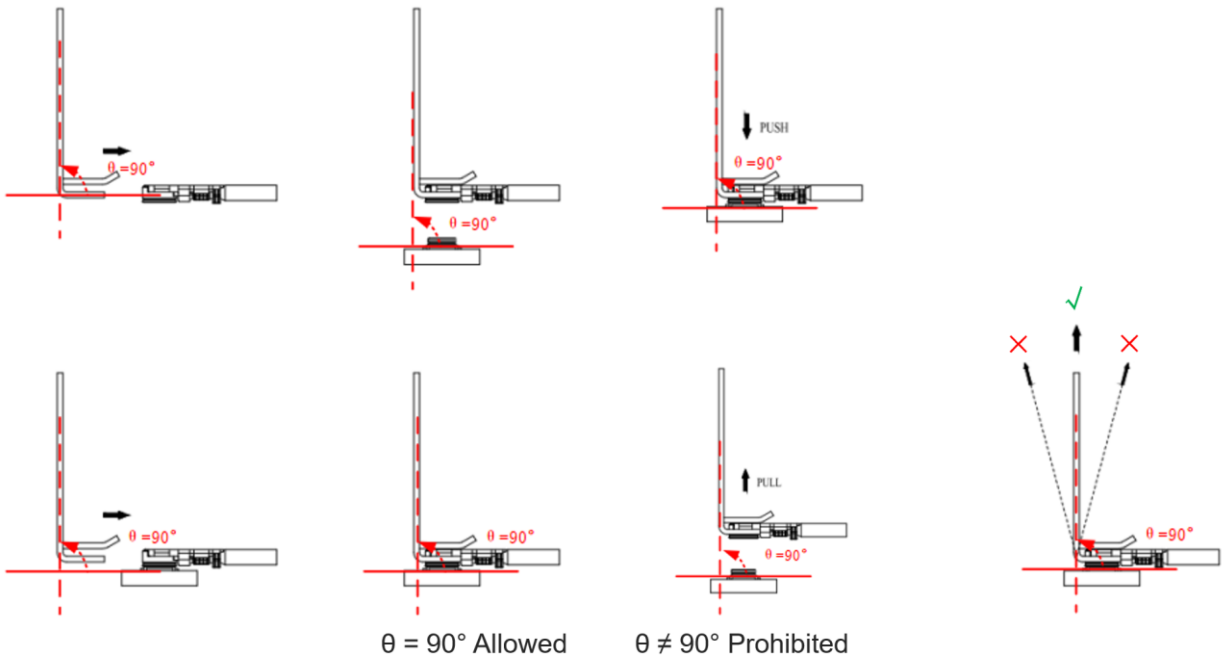

Figure 21: Install the Coaxial Cable Plug with Jig

5.3.3.5. Recommended Manufacturers of RF Connector and Cable

RF connectors and cables by I-PEX are recommended. For more details, visit https://www.i-pex.com.

6 Electrical Characteristics & Reliability

6.1. Absolute Maximum Ratings

Absolute maximum ratings for power supply and voltage on digital and analog pins of the module are listed in the following table.

Table 21: Absolute Maximum Ratings (Unit: V)

Parameter	Min.	Max.
VBAT	-0.3	3.6
Voltage at Digital Pins	-0.3	3.6
Voltage at ADC[1:6]	0	3.6

6.2. Power Supply Ratings

Table 22: Module Power Supply Ratings (Unit: V)

Parameter	Description	Condition	Min.	Typ.	Max.
VBAT	Power supply for the module	The actual input voltages must be kept between the minimum and maximum values.	3.0	3.3	3.6

6.3. Digital I/O Characteristics

Table 23: VBAT I/O Characteristics (Unit: V)

Parameter	Description	Min.	Max.
V_{IH}	High-level input voltage	0.7 × VBAT	VBAT
V_{IL}	Low-level input voltage	0	0.3 × VBAT
V_{OH}	High-level output voltage	0.9 × VBAT	-
V_{OL}	Low-level output voltage	-	0.1 × VBAT

6.4. ESD Protection

Static electricity occurs naturally and may damage the module. Therefore, applying proper ESD countermeasures and handling methods is imperative. For example, wear anti-static gloves during the development, production, assembly and testing of the module; add ESD protection components to the ESD sensitive interfaces and points in the product design.

Table 24: ESD Characteristics (Unit: kV)

Model	Test Result	Standard
Human Body Model (HBM)	±2	*ANSI/ESDA/JEDEC JS-001-2017*
Charged Device Model (CDM)	±0.5	*ANSI/ESDA/JEDEC JS-002-2018*

7 Mechanical Information

This chapter describes the mechanical dimensions of the module. All dimensions are measured in millimeters (mm), and the dimensional tolerances are ±0.2 mm unless otherwise specified.

7.1. Mechanical Dimensions

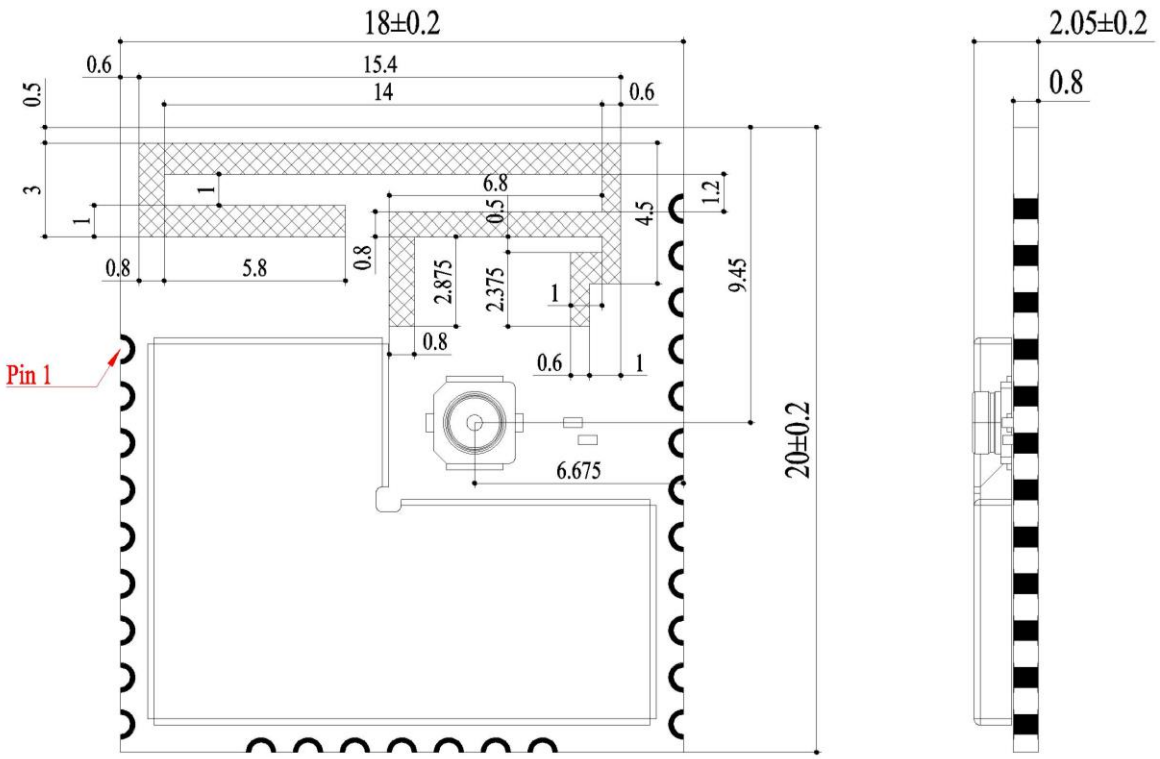

Figure 22: Top and Side Dimensions

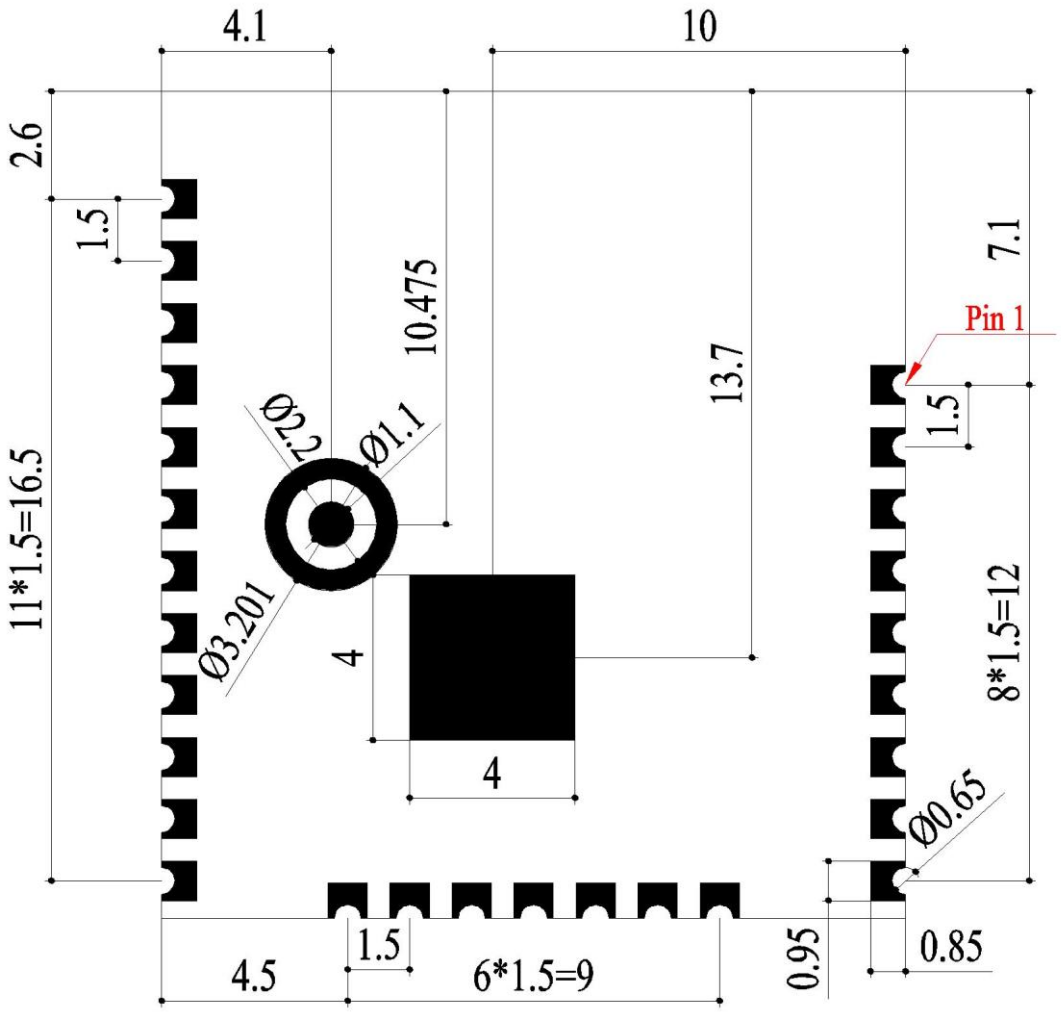

Figure 23: Bottom Dimensions (Bottom View)

NOTE

The package warpage level of the module conforms to the *JEITA ED-7306* standard.

7.2. Recommended Footprint

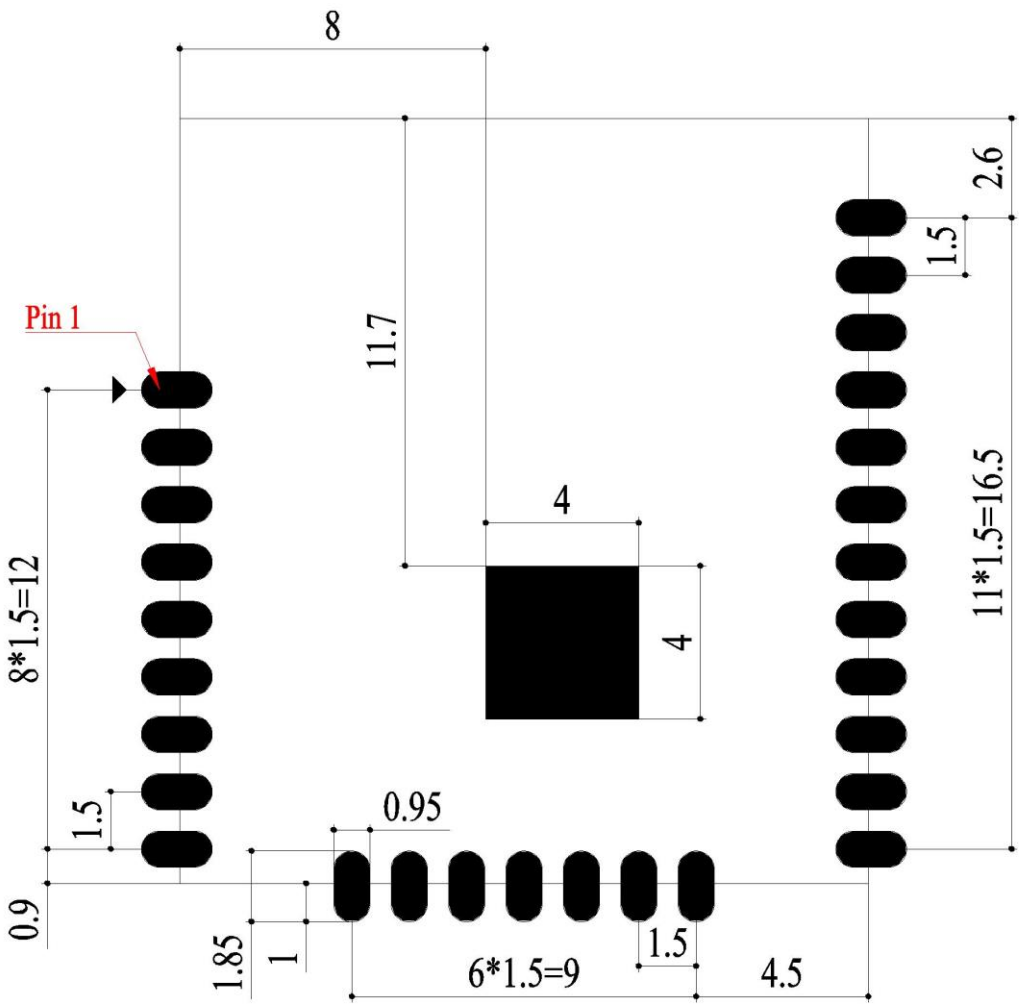

Figure 24: Recommended Footprint

NOTE

Keep at least 3 mm between the module and other components on the motherboard to improve soldering quality and maintenance convenience.

7.3. Top and Bottom Views

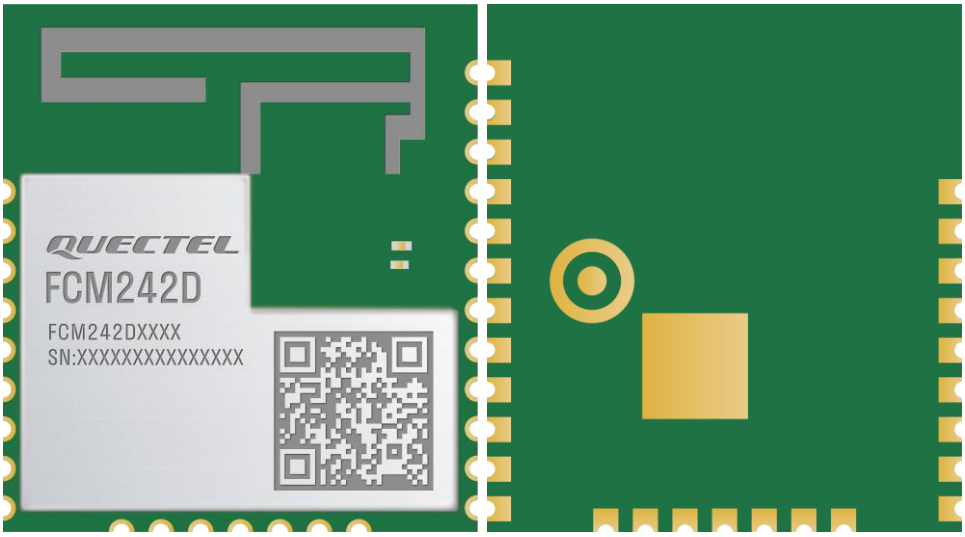

Figure 25: Top and Bottom Views (Pin Antenna Interface)

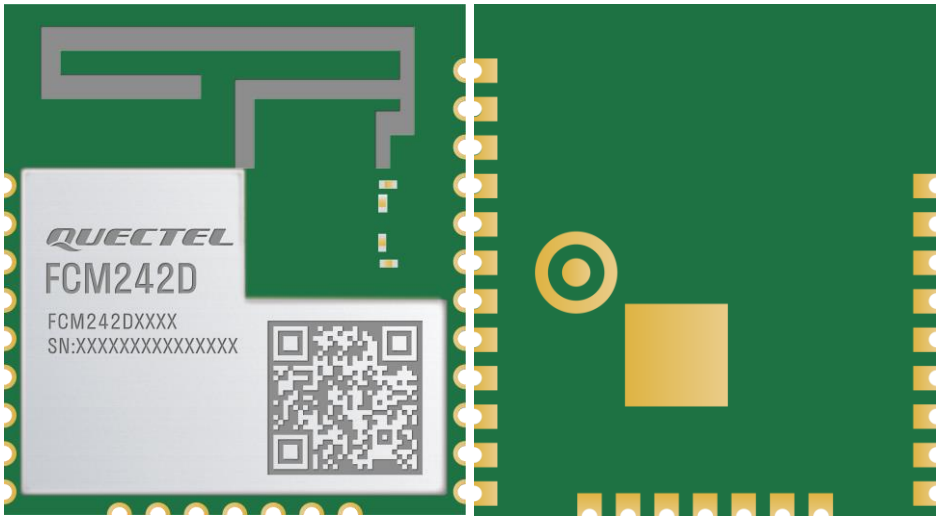

Figure 26: Top and Bottom Views (PCB Antenna)

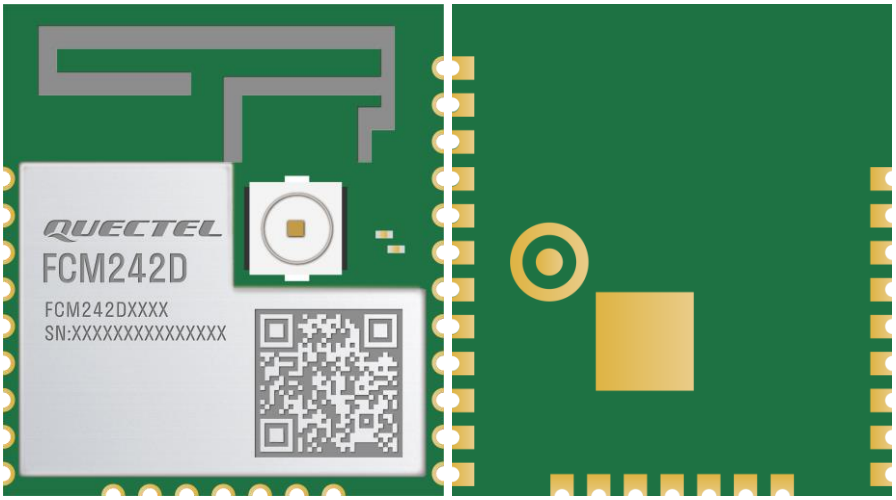

Figure 27: Top and Bottom Views (RF Coaxial Connector)

NOTE

1. Images above are for illustrative purposes only and may differ from the actual module. For authentic appearance and label, please refer to the module received from Quectel.
2. The RF coaxial connector is not mounted on the module when using PCB antenna or pin antenna interface (ANT_WIFI/BT).

8 Storage, Manufacturing & Packaging

8.1. Storage Conditions

The module is provided with vacuum-sealed packaging. MSL of the module is rated as 3. The storage requirements are shown below.

1. Recommended Storage Condition: the temperature should be 23 ±5 °C and the relative humidity should be 35–60 %.

2. Shelf life (in a vacuum-sealed packaging): 12 months in Recommended Storage Condition.

3. Floor life: 168 hours [8] in a factory where the temperature is 23 ±5 °C and relative humidity is below 60 %. After the vacuum-sealed packaging is removed, the module must be processed in reflow soldering or other high-temperature operations within 168 hours. Otherwise, the module should be stored in an environment where the relative humidity is less than 10 % (e.g., a dry cabinet).

4. The module should be pre-baked to avoid blistering, cracks and inner-layer separation in PCB under the following circumstances:

   - The module is not stored in Recommended Storage Condition;
   - Violation of the third requirement mentioned above;
   - Vacuum-sealed packaging is broken, or the packaging has been removed for over 24 hours;
   - Before module repairing.

5. If needed, the pre-baking should follow the requirements below:

   - The module should be baked for 8 hours at 120 ±5 °C;
   - The module must be soldered to PCB within 24 hours after the baking, otherwise it should be put in a dry environment such as in a dry cabinet.

[8] This floor life is only applicable when the environment conforms to *IPC/JEDEC J-STD-033*. It is recommended to start the solder reflow process within 24 hours after the package is removed if the temperature and moisture do not conform to, or are not sure to conform to *IPC/JEDEC J-STD-033*. Do not unpack the modules in large quantities until they are ready for soldering.

NOTE

1. To avoid blistering, layer separation and other soldering issues, extended exposure of the module to the air is forbidden.
2. Take out the module from the package and put it on high-temperature-resistant fixtures before baking. If shorter baking time is desired, see *IPC/JEDEC J-STD-033* for the baking procedure.
3. Pay attention to ESD protection, such as wearing anti-static gloves, when touching the modules.

8.2. Manufacturing and Soldering

Push the squeegee to apply the solder paste on the surface of stencil, thus making the paste fill the stencil openings and then penetrate to the PCB. Apply proper force on the squeegee to produce a clean stencil surface on a single pass. To guarantee module soldering quality, the thickness of stencil for the module is recommended to be 0.12–0.15 mm. For more details, see ***document [3]***.

The recommended peak reflow temperature should be 235–246 ºC, with 246 ºC as the absolute maximum reflow temperature. To avoid damage to the module caused by repeated heating, it is recommended that the module should be mounted only after reflow soldering for the other side of PCB has been completed. The recommended reflow soldering thermal profile (lead-free reflow soldering) and related parameters are shown below.

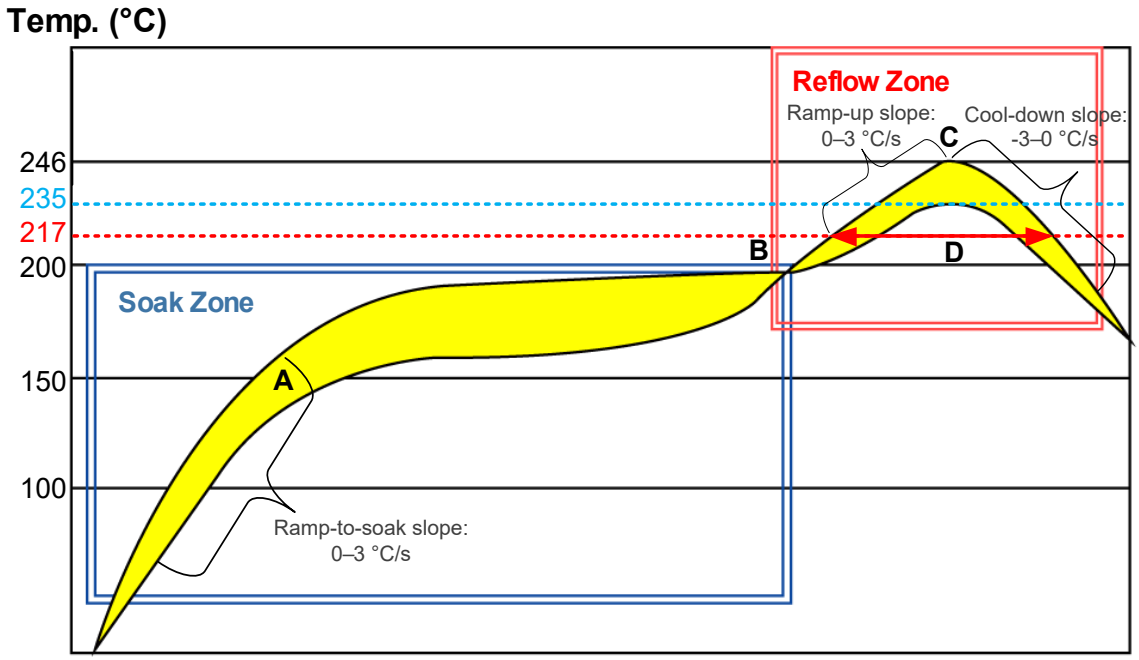

Figure 28: Recommended Reflow Soldering Thermal Profile

Table 25: Recommended Thermal Profile Parameters

Factor	Recommended Value
Soak Zone	
Ramp-to-soak slope	0–3 °C/s
Soak time (between A and B: 150 °C and 200 °C)	70–120 s
Reflow Zone	
Ramp-up slope	0–3 °C/s
Reflow time (D: over 217 °C)	40–70 s
Max. temperature	235–246 °C
Cool-down slope	-3–0 °C/s
Reflow Cycle	
Max. reflow cycle	1

NOTE

1. The above profile parameter requirements are for the measured temperature of solder joints. Both the hottest and coldest spots of solder joints on the PCB should meet the above requirements.
2. During manufacturing and soldering, or any other processes that may contact the module directly, NEVER wipe the module's shielding can with organic solvents, such as acetone, ethyl alcohol, isopropyl alcohol, trichloroethylene, etc. Otherwise, the shielding can may become rusted.
3. The shielding can for the module is made of Cupro-Nickel base material. It is tested that after 12 hours' Neutral Salt Spray test, the laser engraved label information on the shielding can is still clearly identifiable and the QR code is still readable, although white rust may be found.
4. If a conformal coating is necessary for the module, do NOT use any coating material that may chemically react with the PCB or shielding cover, and prevent the coating material from flowing into the module.
5. Avoid using ultrasonic technology for module cleaning since it can damage crystals inside the module.
6. Due to the complexity of the SMT process, please contact Quectel Technical Support in advance for any situation that you are not sure about, or any process (e.g. selective soldering, ultrasonic soldering) that is not mentioned in ***document [3]***.

8.3. Packaging Specifications

This chapter describes only the key parameters and process of packaging. All figures below are for reference only. The appearance and structure of the packaging materials are subject to the actual delivery.

The module adopts carrier tape packaging and details are as follow:

8.3.1. Carrier Tape

Carrier tape dimensions are detailed below:

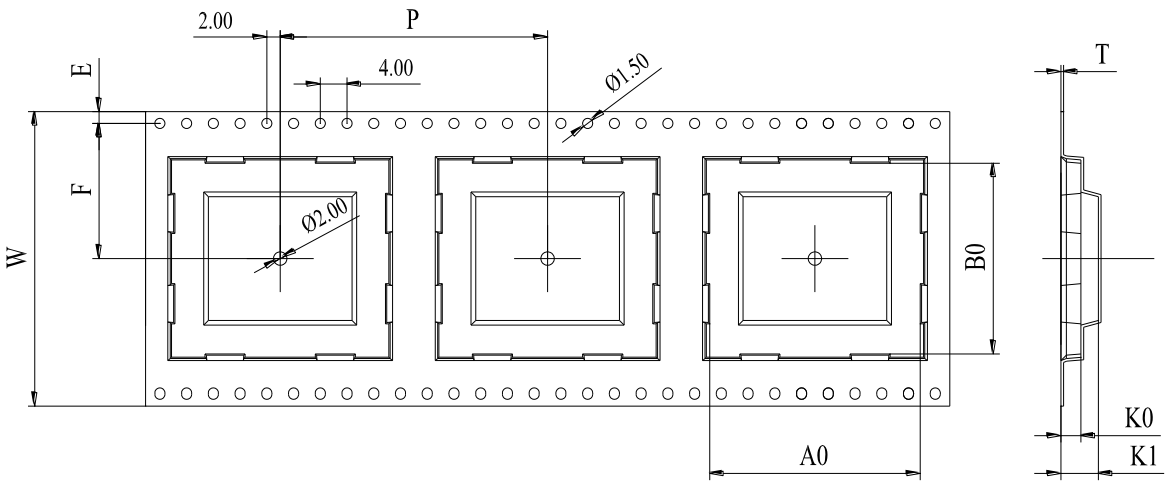

Figure 29: Tape Specifications

Table 26: Carrier Tape Dimension Table (Unit: mm)

W	P	T	A0	B0	K0	K1	F	E
44	32	0.4	18.5	20.5	3	6.8	20.2	1.75

8.3.2. Plastic Reel

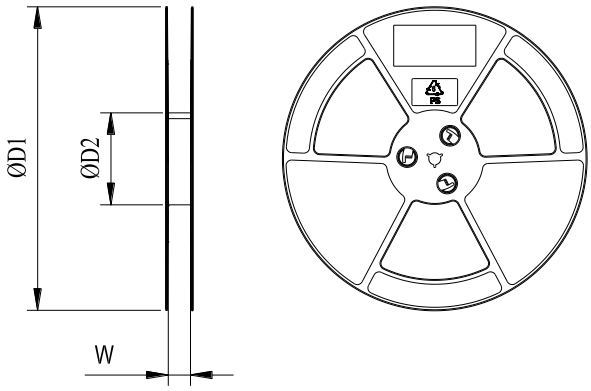

Figure 30: Plastic Reel Dimension Drawing

Table 27: Plastic Reel Dimension Table (Unit: mm)

øD1	øD2	W
330	100	44.5

8.3.3. Mounting Direction

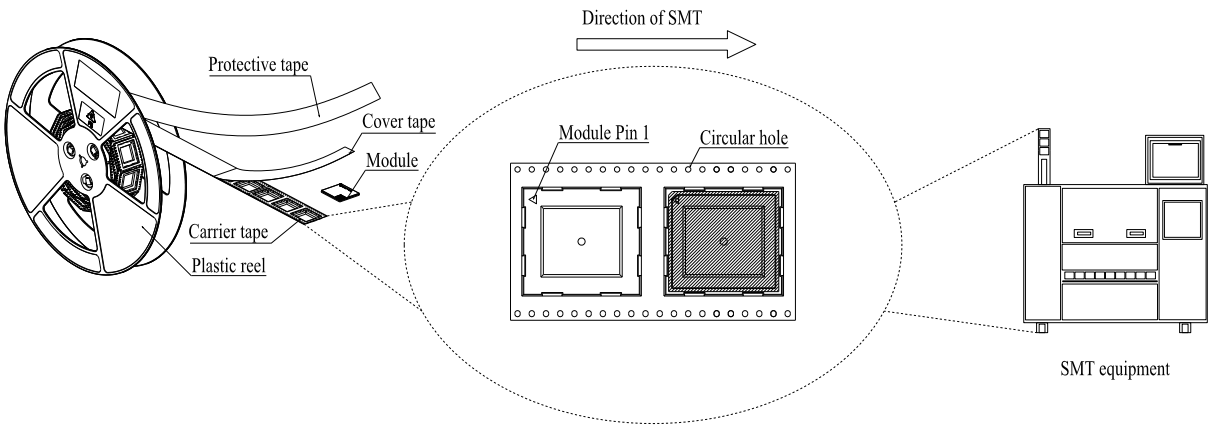

Figure 31: Mounting Direction

8.3.4. Packaging Process

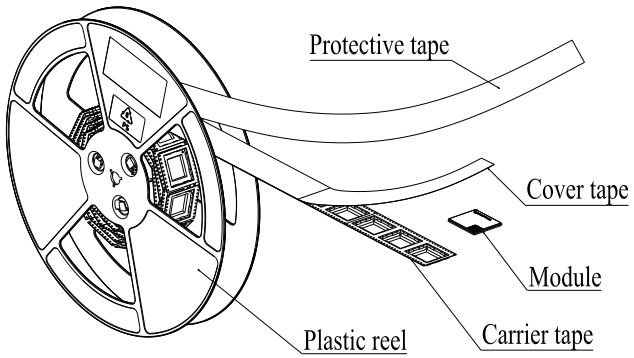

Place the modules into the carrier tape and use the cover tape to cover them; then wind the heat-sealed carrier tape on the plastic reel and use the protective tape for protection. 1 plastic reel can load 250 modules.

Place the packaged plastic reel, 1 humidity indicator card and 1 desiccant bag into a vacuum bag, then vacuumize it.

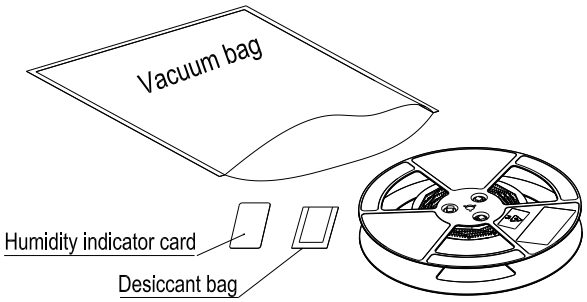

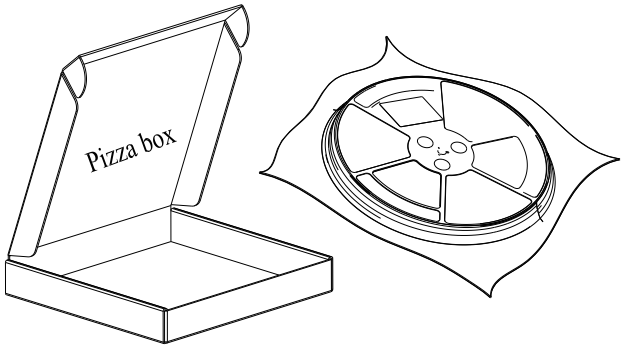

Place the vacuum-packed plastic reel inside the pizza box.

Place 4 packaged pizza boxes inside 1 carton box and seal it. 1 carton box can pack 1000 modules.

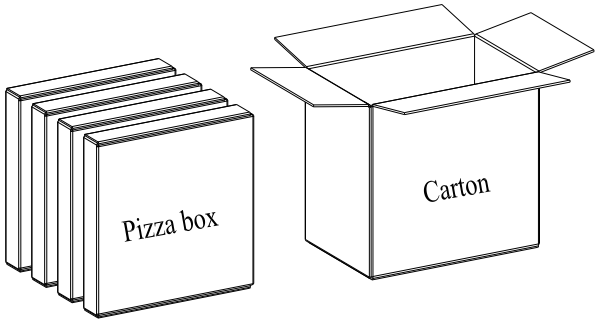

Figure 32: Packaging Process

9 Appendix References

Table 28: Reference Documents

Document Name
[1] Quectel_FCM242D_TE-B_User_Guide
[2] Quectel_RF_Layout_Application_Note
[3] Quectel_Module_SMT_Application_Note

Table 29: Terms and Abbreviations

Abbreviation	Description
ADC	Analog-to-Digital Converter
AP	Access Point
BLE	Bluetooth Low Energy
BPSK	Binary Phase Shift Keying
CCK	Complementary Code Keying
CDM	Charged Device Model
DSSS	Direct Sequence Spread Spectrum
ESD	Electrostatic Discharge
EVM	Error Vector Magnitude
GFSK	Gauss frequency Shift Keying
GND	Ground
GPIO	General-Purpose Input/Output
HT	High Throughput

I/O	Input/Output
I2C	Inter-Integrated Circuit
IEEE	Institute of Electrical and Electronics Engineers
IoT	Internet of Things
LCC	Leadless Chip Carrier (package)
Mbps	Million Bits Per Second
MCU	Microcontroller Unit
MISO	Master In Slave Out
MOSI	Master Out Slave In
OTA	Over-the-Air
PCB	Printed Circuit Board
PWM	Pulse Width Modulation
QAM	Quadrature Amplitude Modulation
QPSK	Quadrature Phase Shift Keying
RAM	Random Access Memory
RF	Radio Frequency
RoHS	Restriction of Hazardous Substances
SMD	Surface Mount Device
SMT	Surface Mount Technology
SPI	Serial Peripheral Interface
STA	Station
TVS	Transient Voltage Suppressor
Tx	Transmit
UART	Universal Asynchronous Receiver/Transmitter
V_{IH}	High-level Input Voltage
V_{IL}	Low-level Input Voltage
Vmax	Maximum Voltage

Vmin	Minimum Voltage
Vnom	Nominal Voltage Value
V_{OH}	High-level Output Voltage
V_{OL}	Low-level Output Voltage
VSWR	Voltage Standing Wave Ratio
Wi-Fi	Wireless Fidelity

Important Notice to OEM integrators

1. This module is limited to OEM installation ONLY.
2. This module is limited to installation in mobile or fixed applications, according to Part 2.1091(b).
3. The separate approval is required for all other operating configurations, including portable configurations with respect to Part 2.1093 and different antenna configurations
4. For FCC Part 15.31 (h) and (k): The host manufacturer is responsible for additional testing to verify compliance as a composite system. When testing the host device for compliance with Part
15 Subpart B, the host manufacturer is required to show compliance with Part 15 Subpart B while the transmitter module(s) are installed and operating. The modules should be transmitting and the evaluation should confirm that the module's intentional emissions are compliant (i.e. fundamental and out of band emissions). The host manufacturer must verify that there are no additional unintentional emissions other than what is permitted in Part 15 Subpart B or emissions are complaint with the transmitter(s) rule(s).
The Grantee will provide guidance to the host manufacturer for Part 15 B requirements if needed.

Important Note

notice that any deviation(s) from the defined parameters of the antenna trace, as described by the instructions, require that the host product manufacturer must notify to Quectel that they wish to change the antenna trace design. In this case, a Class II permissive change application is required to be filed by the USI, or the host manufacturer can take responsibility through the change in FCC ID (XMR2023FCM242D) procedure followed by a Class II permissive change application.

End Product Labeling

When the module is installed in the host device, the FCC/IC ID label must be visible through a window on the final device or it must be visible when an access panel, door or cover is easily re-moved. If not, a second label must be placed on the outside of the final device that contains the following text: “Contains FCC ID: XMR2023FCM242D”
“Contains IC: 10224A-2023FCM242D“
The FCC ID/IC ID can be used only when all FCC/IC compliance requirements are met.

Antenna Installation

(1) The antenna must be installed such that 20 cm is maintained between the antenna and users,
(2) The transmitter module may not be co-located with any other transmitter or antenna.
(3) Only antennas of the same type and with equal or less gains as shown below may be used with this module. Other types of antennas and/or higher gain antennas may require additional authorization for operation.

Antenna type	2.4GHz band Peak Gain (dBi)	5.2GHz band Peak Gain (dBi)	5.3GHz band Peak Gain (dBi)	5.5GHz band Peak Gain (dBi)	5.8GHz band Peak Gain (dBi)
PCB	1.4	/	/	/	/

In the event that these conditions cannot be met (for example certain laptop configurations or co-location with another transmitter), then the FCC/IC authorization is no longer considered valid and the FCC ID/IC ID cannot be used on the final product. In these circumstances, the OEM integrator will be responsible for re-evaluating the end product (including the transmitter) and obtaining a separate FCC/IC authorization.

Manual Information to the End User

The OEM integrator has to be aware not to provide information to the end user regarding how to install or remove this RF module in the user's manual of the end product which integrates this module. The end user manual shall include all required regulatory information/warning as show in this manual.

Federal Communication Commission Interference Statement

This device complies with Part 15 of the FCC Rules. Operation is subject to the following two conditions: (1) This device may not cause harmful interference, and (2) this device must accept any interference received, including interference that may cause undesired operation.
This equipment has been tested and found to comply with the limits for a Class B digital device, pursuant to Part 15 of the FCC Rules. These limits are designed to provide reasonable protection against harmful interference in a residential installation. This equipment generates, uses and can radiate radio frequency energy and, if not installed and used in accordance with the instructions, may cause harmful interference to radio communications. However, there is no guarantee that interference will not occur in a particular installation. If this equipment does cause harmful interference to radio or television reception, which can be determined by turning the equipment off and on, the user is encouraged to try to correct the interference by one of the following measures:
- Reorient or relocate the receiving antenna.
- Increase the separation between the equipment and receiver.
- Connect the equipment into an outlet on a circuit different from that to which the receiver is connected.
- Consult the dealer or an experienced radio/TV technician for help.

Any changes or modifications not expressly approved by the party responsible for compliance could void the user's authority to operate this equipment. This transmitter must not be co-located or operating in conjunction with any other antenna or transmitter.

s

This device is intended only for OEM integrators under the following conditions: (For module device use)

1) The antenna must be installed such that 20 cm is maintained between the antenna and users, and
2) The transmitter module may not be co-located with any other transmitter or antenna.

As long as 2 conditions above are met, further transmitter test will not be required. However, the OEM integrator is still responsible for testing their end-product for any additional compliance requirements required with this module installed.

Radiation Exposure Statement

This equipment complies with FCC radiation exposure limits set forth for an uncontrolled environment. This equipment should be installed and operated with minimum distance 20 cm between the radiator & your body.

IC

Industry Canada Statement

This device complies with Industry Canada's licence-exempt RSSs. Operation is subject to the following two conditions:
(1) This device may not cause interference; and
(2) This device must accept any interference, including interference that may cause undesired operation of the device.

Le présent appareil est conforme aux CNR d'Industrie Canada applicables aux appareils radio exempts de licence. L'exploitation est autorisée aux deux conditions suivantes:
(1) l'appareil ne doit pas produire de brouillage, et
(2) l'utilisateur de l'appareil doit accepter tout brouillage radioélectrique subi, même si le brouillage est susceptible d'en compromettre le fonctionnement."

Radiation Exposure Statement

This equipment complies with IC radiation exposure limits set forth for an uncontrolled environment. This equipment should be installed and operated with minimum distance 20 cm between the radiator & your body.

Déclaration d'exposition aux radiations:

Cet équipement est conforme aux limites d'exposition aux rayonnements ISED établies pour un environnement non contrôlé. Cet équipement doit être installé et utilisé avec un minimum de 20 cm de distance entre la source de rayonnement et votre corps.

This device is intended only for OEM integrators under the following conditions: (For module device use)

1) The antenna must be installed such that 20 cm is maintained between the antenna and users, and
2) The transmitter module may not be co-located with any other transmitter or antenna.
As long as 2 conditions above are met, further transmitter test will not be required. However, the OEM integrator is still responsible for testing their end-product for any additional compliance requirements required with this module installed.

Cet appareil est conçu uniquement pour les intégrateurs OEM dans les conditions suivantes: (Pour utilisation de dispositif module)

1) L'antenne doit être installée de telle sorte qu'une distance de 20 cm est respectée entre l'antenne et

les utilisateurs, et
2) Le module émetteur peut ne pas être coïmplanté avec un autre émetteur ou antenne.

Tant que les 2 conditions ci-dessus sont remplies, des essais supplémentaires sur l'émetteur ne seront pas nécessaires. Toutefois, l'intégrateur OEM est toujours responsable des essais sur son produit final pour toutes exigences de conformité supplémentaires requis pour ce module installé.

IMPORTANT NOTE:

In the event that these conditions can not be met (for example certain laptop configurations or colocation with another transmitter), then the Canada authorization is no longer considered valid and the IC ID can not be used on the final product. In these circumstances, the OEM integrator will be responsible for re-evaluating the end product (including the transmitter) and obtaining a separate Canada authorization.

NOTE IMPORTANTE:

Dans le cas où ces conditions ne peuvent être satisfaites (par exemple pour certaines configurations d'ordinateur portable ou de certaines co-localisation avec un autre émetteur), l'autorisation du Canada n'est plus considéré comme valide et l'ID IC ne peut pas être utilisé sur le produit final. Dans ces circonstances, l'intégrateur OEM sera chargé de réévaluer le produit final (y compris l'émetteur) et l'obtention d'une autorisation distincte au Canada.

End Product Labeling

This transmitter module is authorized only for use in device where the antenna may be installed such that 20 cm may be maintained between the antenna and users. The final end product must be labeled in a visible area with the following: “Contains IC:10224A-2023FCM242D”.

Plaque signalétique du produit final

Ce module émetteur est autorisé uniquement pour une utilisation dans un dispositif où l'antenne peut être installée de telle sorte qu'une distance de 20cm peut être maintenue entre l'antenne et les utilisateurs. Le produit final doit être étiqueté dans un endroit visible avec l'inscription suivante: "Contient des IC: 10224A-2023FCM242D".

Manual Information To the End User

The OEM integrator has to be aware not to provide information to the end user regarding how to install or remove this RF module in the user’s manual of the end product which integrates this module.
The end user manual shall include all required regulatory information/warning as show in this manual.

Manuel d'information à l'utilisateur final

L'intégrateur OEM doit être conscient de ne pas fournir des informations à l'utilisateur final quant à la façon d'installer ou de supprimer ce module RF dans le manuel de l'utilisateur du produit final qui intègre ce module.
Le manuel de l'utilisateur final doit inclure toutes les informations réglementaires requises et avertissements comme indiqué dans ce manuel.

trace design

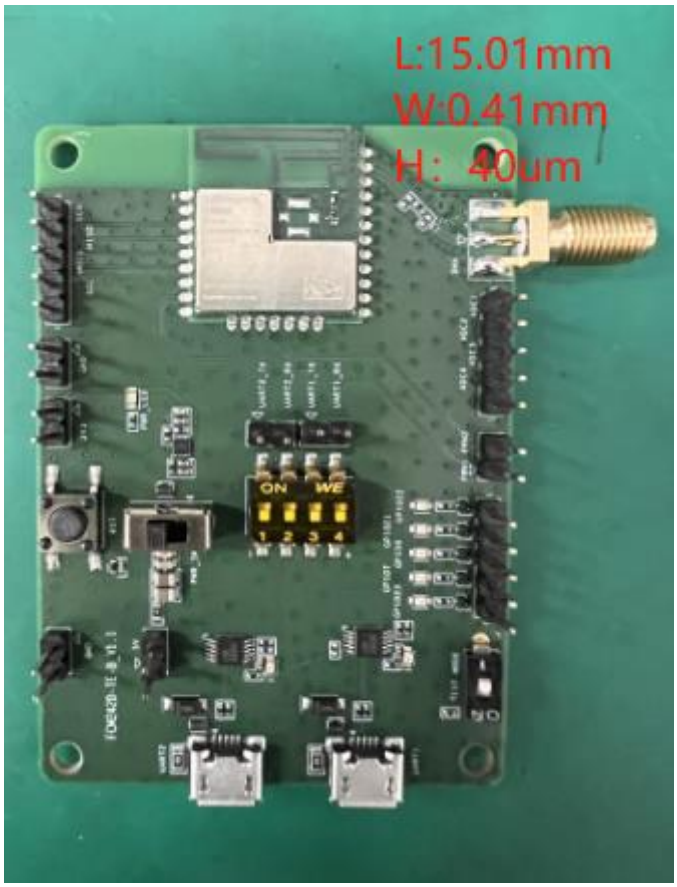

Stack-up

Layer	Mother Board	Tolerance（um）	Typical layer thickness (um)	Dielectric Constant	材料规格
	Solder Mask	+/-	20	4.1	
L1	copper+plating	+/-	40	NA	0.012
	Prepreg(2116)	+/-	245	4.5	#2116 x2
L2	Copper	Hoz	14	NA	
	Core	+/-	965	4.7	1.000mm H/H
L3	Copper	Hoz	14	NA	
	Prepreg(2116)	+/-	245	4.5	#2116 x2
L4	copper+plating	+/-	40	NA	0.012
	solder mask	+/-	20	4.1	
	Total thickness	1.6+/-0.16mm	1603		