FCM360K

Hardware Design

Wi-Fi&Bluetooth Module Series

Version: 1.0.0

Date: 2023-04-08

Status: Preliminary

At Quectel, our aim is to provide timely and comprehensive services to our customers. If you require any assistance, please contact our headquarters:

Quectel Wireless Solutions Co., Ltd.
Building 5, Shanghai Business Park Phase III (Area B), No.1016 Tianlin Road, Minhang District, Shanghai 200233, China
Tel: +86 21 5108 6236
Email: info@quectel.com

Or our local offices. For more information, please visit:
http://www.quectel.com/support/sales.htm.

For technical support, or to report documentation errors, please visit:
http://www.quectel.com/support/technical.htm.
Or email us at: support@quectel.com.

Legal Notices

We offer information as a service to you. The provided information is based on your requirements and we make every effort to ensure its quality. You agree that you are responsible for using independent analysis and evaluation in designing intended products, and we provide reference designs for illustrative purposes only. Before using any hardware, software or service guided by this document, please read this notice carefully. Even though we employ commercially reasonable efforts to provide the best possible experience, you hereby acknowledge and agree that this document and related services hereunder are provided to you on an “as available” basis. We may revise or restate this document from time to time at our sole discretion without any prior notice to you.

Use and Disclosure Restrictions

License Agreements

Documents and information provided by us shall be kept confidential, unless specific permission is granted. They shall not be accessed or used for any purpose except as expressly provided herein.

Copyright

Our and third-party products hereunder may contain copyrighted material. Such copyrighted material shall not be copied, reproduced, distributed, merged, published, translated, or modified without prior written consent. We and the third party have exclusive rights over copyrighted material. No license shall be granted or conveyed under any patents, copyrights, trademarks, or service mark rights. To avoid ambiguities, purchasing in any form cannot be deemed as granting a license other than the normal non-exclusive, royalty-free license to use the material. We reserve the right to take legal action for noncompliance with abovementioned requirements, unauthorized use, or other illegal or malicious use of the material.

Trademarks

Except as otherwise set forth herein, nothing in this document shall be construed as conferring any rights to use any trademark, trade name or name, abbreviation, or counterfeit product thereof owned by Quectel or any third party in advertising, publicity, or other aspects.

Third-Party Rights

This document may refer to hardware, software and/or documentation owned by one or more third parties ("third-party materials"). Use of such third-party materials shall be governed by all restrictions and obligations applicable thereto.

We make no warranty or representation, either express or implied, regarding the third-party materials, including but not limited to any implied or statutory, warranties of merchantability or fitness for a particular purpose, quiet enjoyment, system integration, information accuracy, and non-infringement of any third-party intellectual property rights with regard to the licensed technology or use thereof. Nothing herein constitutes a representation or warranty by us to either develop, enhance, modify, distribute, market, sell, offer for sale, or otherwise maintain production of any our products or any other hardware, software, device, tool, information, or product. We moreover disclaim any and all warranties arising from the course of dealing or usage of trade.

Privacy Policy

To implement module functionality, certain device data are uploaded to Quectel's or third-party's servers, including carriers, chipset suppliers or customer-designated servers. Quectel, strictly abiding by the relevant laws and regulations, shall retain, use, disclose or otherwise process relevant data for the purpose of performing the service only or as permitted by applicable laws. Before data interaction with third parties, please be informed of their privacy and data security policy.

Disclaimer

a) We acknowledge no liability for any injury or damage arising from the reliance upon the information.
b) We shall bear no liability resulting from any inaccuracies or omissions, or from the use of the information contained herein.
c) While we have made every effort to ensure that the functions and features under development are free from errors, it is possible that they could contain errors, inaccuracies, and omissions. Unless otherwise provided by valid agreement, we make no warranties of any kind, either implied or express, and exclude all liability for any loss or damage suffered in connection with the use of features and functions under development, to the maximum extent permitted by law, regardless of whether such loss or damage may have been foreseeable.
d) We are not responsible for the accessibility, safety, accuracy, availability, legality, or completeness of information, advertising, commercial offers, products, services, and materials on third-party websites and third-party resources.

Copyright © Quectel Wireless Solutions Co., Ltd. 2023. All rights reserved.

Safety Information

The following safety precautions must be observed during all phases of operation, such as usage, service or repair of any cellular or mobile terminal incorporating the module. Manufacturers of the cellular terminal should notify users and operating personnel of the following safety precautions by incorporating them into all product manuals. Otherwise, Quectel assumes no liability for customers' failure to comply with these precautions.

	Full attention must be paid to driving at all times to reduce the risk of an accident. Using a mobile phone while driving (even with a handsfree kit) causes distraction and can lead to an accident. Please comply with laws and regulations restricting the use of wireless devices while driving.
	Switch off the cellular or mobile terminal before boarding an aircraft. The operation of wireless appliances in an aircraft is forbidden to prevent interference with communication systems. If there is an Airplane Mode, it should be enabled prior to boarding an aircraft. Please consult the airline staff for more restrictions on the use of wireless devices on an aircraft.
	Wireless devices may cause interference on sensitive medical equipment, so please be aware of the restrictions on the use of wireless devices when in hospitals, clinics or other healthcare facilities.
	Cellular terminals or mobiles operating over radio signal and cellular network cannot be guaranteed to connect in certain conditions, such as when the mobile bill is unpaid or the (U)SIM card is invalid. If emergency assistance is needed, use emergency call if the device supports it. To make or receive a call, the cellular or mobile terminal must be switched on in a service area with adequate cellular signal strength. In an emergency, the device with emergency call function cannot be used as the only contact method since network connection cannot be guaranteed under all circumstances.
	The cellular or mobile terminal contains a transceiver. When it is ON, it receives and transmits radio signals. RF interference can occur if it is used close to TV sets, radios, computers, or other electric equipment.
	In locations with explosive or potentially explosive atmospheres, obey all posted signs and turn off wireless devices such as mobile phones or other cellular terminals. Areas with explosive or potentially explosive atmospheres include fueling areas, below decks on boats, fuel or chemical transfer or storage facilities, and areas where the air contains chemicals or particles such as grain, dust or metal powders.

About the Document

Revision History

Version	Date	Author	Description
-	2023-04-08	Sunny LV/Wesley WEI	Creation of the document
1.0.0	2023-04-08	Sunny LV/Wesley WEI	Preliminary

Contents

Safety Information 3
About the Document 4
Contents 5
Table Index 7
Figure Index 8

1 Introduction 9
1.1. Special Marks 9

2 Product Overview 10
2.1. General Description 10
2.2. Key Features 10
2.3. Functional Diagram 11

3 Application Interfaces 13
3.1. Pin Assignment 13
3.2. Pin Description 14
3.3. GPIO Multiplexing 16
3.4. Application Interfaces 18
3.4.1. UARTs 18
3.4.2. SPI* 19
3.4.3. I2C Interfaces 20
3.4.4. PWM Interfaces* 21
3.4.5. ADC Interfaces 21
3.4.6. USB Interface 22
3.5. RF Antenna Interfaces 22
3.5.1. Operating Frequencies 23
3.5.2. Pin Antenna (Optional) 23
3.5.2.1. Reference Design 23
3.5.2.2. Antenna Design Requirements 24
3.5.2.3. RF Routing Guidelines 24
3.5.3. PCB Antenna (Optional) 26
3.5.4. Coaxial RF Connector (Optional) 28
3.5.4.1. Assemble Coaxial Cable Plug Manually 30
3.5.4.2. Assemble Coaxial Cable Plug with Jig 31
3.5.4.3. Recommended Manufacturers of RF Connector and Cable 31

4 Operating Characteristics 32
4.1. Power Supply 32
4.1.1. Reference Design for Power Supply 32
4.2. Turn On 33
4.3. Download Mode 34

5 RF Performances 35

5.1. Wi-Fi Performances 35
5.2. Bluetooth Performances 36

6 Electrical Characteristics & Reliability 38
6.1. Absolute Maximum Ratings 38
6.2. Power Supply Ratings 38
6.3. Wi-Fi Power Consumption 39
6.4. Digital I/O Characteristics 40
6.5. ESD Protection 41

7 Mechanical Information 42
7.1. Mechanical Dimensions 42
7.2. Recommended Footprint 44
7.3. Top and Bottom Views 45

8 Storage, Manufacturing & Packaging 47
8.1. Storage Conditions 47
8.2. Manufacturing and Soldering 48
8.3. Packaging Specifications 50
8.3.1. Carrier Tape 50
8.3.2. Plastic Reel 51
8.3.3. Mounting Direction 51
8.3.4. Packaging Process 52

9 Appendix References 53

Table Index

Table 1: Special Marks 9
Table 2: Basic Information 10
Table 3: Key Features 11
Table 4: I/O Parameter Description 14
Table 5: Pin Description 14
Table 6: GPIO Multiplexing 16
Table 7: Pin Definition of UARTs 18
Table 8: Pin Definition of SPI 20
Table 9: Pin Definition of I2C Interfaces 20
Table 10: Pin Definition of PWM Interfaces 21
Table 11: Pin Definition of ADC Interfaces 21
Table 12: ADC Features 22
Table 13: Pin Definition of USB Interface 22
Table 14: Operating Frequencies (Unit: GHz) 23
Table 15: ANT_WIFI/BT Pin Definition 23
Table 16: Antenna Design Requirements 24
Table 17: PCB Antenna Specifications 26
Table 18: Major Specifications of the RF Connector 28
Table 19: Pin Definition of Power Supply and GND Pins 32
Table 20: Pin Definition of CHIP_EN 33
Table 21: Wi-Fi Performances 35
Table 22: Bluetooth Performances 37
Table 23: Absolute Maximum Ratings (Unit: V) 38
Table 24: Module Power Supply Ratings (Unit: V) 38
Table 25: Power Consumption in Low Power Modes 39
Table 26: Power Consumption in Non-signaling Modes 39
Table 27: VBAT I/O Characteristics (Unit: V) 40
Table 28: ESD Characteristics (Unit: kV) 41
Table 29: Recommended Thermal Profile Parameters 49
Table 30: Carrier Tape Dimension Table (Unit: mm) 50
Table 31: Reel Dimensions (Unit: mm) 51
Table 32: Reference Documents 53
Table 33: Terms and Abbreviations 53

Figure Index

Figure 1: Functional Diagram 12
Figure 2: Pin Assignment (Top View) 13
Figure 3: Main UART1 Connection 18
Figure 4: RF Antenna Reference Design 24
Figure 5: Microstrip Design on a 2-layer PCB 25
Figure 6: Coplanar Waveguide Design on a 2-layer PCB 25
Figure 7: Coplanar Waveguide Design on a 4-layer PCB (Layer 3 as Reference Ground) 25
Figure 8: Coplanar Waveguide Design on a 4-layer PCB (Layer 4 as Reference Ground) 25
Figure 9: Keepout Area on Motherboard 27
Figure 10: Prohibited Area for Routing 27
Figure 11: Dimensions of the Receptacle (Unit: mm) 28
Figure 12: Specifications of Mated Plugs (Unit: mm) 29
Figure 13: Space Factor of the Mated Connectors (Unit: mm) 29
Figure 14: Plug in a Coaxial Cable Plug 30
Figure 15: Pull out a Coaxial Cable Plug 30
Figure 16: Install the Coaxial Cable Plug with Jig 31
Figure 17: VBAT Reference Circuit 32
Figure 18: Turn-on Timing 33
Figure 19: Reference Design for Download Mode 34
Figure 20: Top and Side Dimensions 42
Figure 21: Bottom Dimensions (Bottom View) 43
Figure 22: Recommended Footprint 44
Figure 23: Top and Bottom Views (Pin Antenna) 45
Figure 24: Top and Bottom Views (PCB Antenna) 45
Figure 25: Top and Bottom Views (Coaxial RF Connector) 46
Figure 26: Recommended Reflow Soldering Thermal Profile 48
Figure 27: Tape Specifications 50
Figure 28: Reel Specifications 51
Figure 29: Mounting Direction 51
Figure 30: Packaging Process 52

1 Introduction

QuecOpen® is a solution where the module acts as the main processor. Constant transition and evolution of both the communication technology and the market highlight its merits. It can help you to:

- Realize embedded applications' quick development and shorten product R&D cycle
- Simplify circuit and hardware structure design to reduce engineering costs
- Miniaturize products
- Reduce product power consumption
- Apply OTA technology
- Enhance product competitiveness and price-performance ratio

This document defines FCM360K in QuecOpen® solution and describes its air interfaces and hardware interfaces, which are connected with your applications.

With this document, you can quickly understand module interface specifications, electrical and mechanical details, as well as other related information of the module. The document, coupled with application notes and user guides, makes it easy to design and set up mobile applications with the module.

1.1. Special Marks

Table 1: Special Marks

Mark	Definition
*	Unless otherwise specified, when an asterisk (*) is used after a function, feature, interface, pin name, AT command, or argument, it indicates that the function, feature, interface, pin, AT command, or argument is under development and currently not supported; and the asterisk (*) after a model indicates that the sample of the model is currently unavailable.
[…]	Brackets ([…]) used after a pin enclosing a range of numbers indicate all pins of the same type. For example, SDIO_DATA[0:3] refers to all four SDIO pins: SDIO_DATA0, SDIO_DATA1, SDIO_DATA2, and SDIO_DATA3.

2 Product Overview

FCM360K is a high-performance Wi-Fi and Bluetooth module for smart-home IoT terminals supporting IEEE 802.11b/g/n/ax and Bluetooth 5.2 standards. The module, featuring built-in PMU, PA, LNA and T/R switch, provides multiple interfaces including UART, SPI*, I2C, ADC AND PWM* for various applications.

FCM360K is an SMD module with compact packaging. It includes:

- 240 MHz Cortex-M4F processor
- Built-in 752 KB ROM, 992 KB SRAM and 8 MB flash
- Support secondary development

Table 2: Basic Information

FCM360K	
Packaging type	LCC
Pin counts	39
Dimensions	(25.5 ±0.15) mm × (18 ±0.15) mm × (3.15 ±0.2) mm
Weight	Approx. 1.63 g

2.1. Key Features

Table 3: Key Features

Basic Information	
Protocols and Standards	● Wi-Fi Protocol: IEEE 802.11a/b/g/n/ac/ax ● Bluetooth protocol: Bluetooth 5.2 ● All hardware components are fully compliant with EU RoHS directive
Power Supply	**VBAT Power Supply:** ● 3.0–3.6 V ● Typ.: 3.3 V
Temperature Ranges	● Operating temperature [1]: -40 to +85 °C ● Storage temperature: -45 to +95 °C
EVB Kit	FCM360K TE-B [2]
RF Antenna Interface	
Antenna Interfaces	● ANT_WIFI/BT (optional) ● PCB antenna (optional) ● Coaxial RF connector (optional) ● 50 Ω impedance
Application Interface [3]	
Application Interface	UART, SPI*, I2C, ADC, USB, PWM*

2.2. Functional Diagram

The main components of the block diagram are explained below.

- Main chip

[1] Within the operating temperature range, the module's related performance meets IEEE and Bluetooth specifications.
[2] For more details about the EVB, see ***document [1]***.
[3] For more details about the interfaces, see ***Chapter 3.3*** and ***Chapter 3.4***.

- Radio frequency
- Peripheral interfaces

NOTE

The module supports pin antenna (ANT_WIFI/BT), PCB antenna and coaxial RF connector which are all optional.

3 Application Interfaces

3.1. Pin Assignment

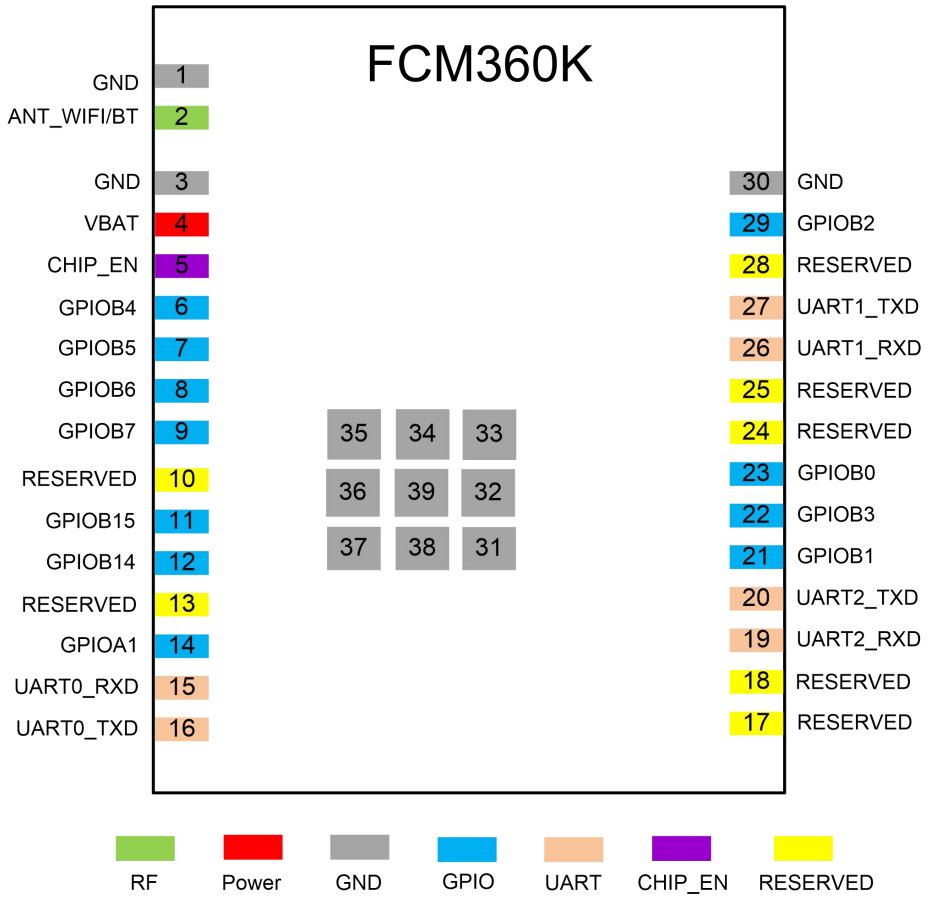

Figure 2: Pin Assignment (Top View)

NOTE

1. Keep all RESERVED and unused pins open.
2. All GND pins should be connected to ground.
3. The module supports UART × 3, SPI* × 1, I2C × 1, SDIO × 1, PWM* × 6, I2S × 1 and ADC × 3 multiplexed with up to 17 GPIO pins. For more details, see ***Chapter 3.3*** and ***Chapter 3.4***.

3.2. Pin Description

Table 4: I/O Parameter Description

Type	Description
AIO	Analog Input/Output
DI	Digital Input
DO	Digital Output
DIO	Digital Input/Output
PI	Power Input

DC characteristics include power domain and rated current, etc.

Table 5: Pin Description

Power Supply					
Pin Name	**Pin No.**	**I/O**	**Description**	**DC Characteristics**	**Comment**
VBAT	4	PI	Power supply for the module	Vmax = 3.6 V Vmin = 3.0 V Vnom = 3.3 V	It must be provided with sufficient current more than 0.5 A.
GND	1, 3, 30, 31–39				
Control Signal					
Pin Name	**Pin No.**	**I/O**	**Description**	**DC Characteristics**	**Comment**
CHIP_EN	5	DI	Enable the module	VBAT	Hardware enable. Internally pulled down with a 200 kΩ resistor. Active high.
Main UARTs					
Pin Name	**Pin No.**	**I/O**	**Description**	**DC Characteristics**	**Comment**
UART1_TXD	27	DO	UART1 transmit	VBAT	
UART1_RXD	26	DI	UART1 receive		

UART2_TXD	20	DO	UART2 transmit		
UART2_RXD	19	DI	UART2 receive		
Debug UART					
UART0_TXD	16	DO	UART0 transmit	VBAT	Test points must be reserved.
UART0_RXD	15	DI	UART0 receive		
GPIO Interfaces					
Pin Name	**Pin No.**	**I/O**	**Description**	**DC Characteristics**	**Comment**
GPIOA1	14	DIO	General-purpose input/output	VBAT	
GPIOB0	23	DIO			
GPIOB1	21	DIO			
GPIOB2	29	DIO			
GPIOB3	22	DIO			
GPIOB4	6	DIO			
GPIOB5	7	DIO			
GPIOB6	8	DIO			
GPIOB7	9	DIO			
GPIOB14	12	DIO			
GPIOB15	11	DIO			
RF Antenna Interface					
Pin Name	**Pin No.**	**I/O**	**Description**	**DC Characteristics**	**Comment**
ANT_WIFI/BT	2	AIO	Wi-Fi/Bluetooth antenna interface (optional)		50 Ω impedance.
RESERVED Pins					
Pin Name	**Pin No.**				**Comment**
RESERVED	10, 13, 17, 18, 24, 25, 28				Keep them unconnected.

3.3. GPIO Multiplexing

The module provides up to 17 GPIO interfaces. Pins are defined as follows:

Table 6: GPIO Multiplexing

Pin Name	Pin No.	Alternate Function 0 (GPIO No.)	Alternate Function 1	Alternate Function 2	Alternate Function 3	Alternate Function 4
GPIOA1	14	GPIOA1	PCM_CLK	I2S_BCLK_0	-	-
GPIOB0	23	GPIOB0	ADC0	UART1_RXD	SPI_MISO	-
GPIOB1	21	GPIOB1	ADC1	UART1_TXD	SPI_CS0	-
GPIOB2	29	GPIOB2	ADC2	UART1_RXD	SPI_MOSI	-
GPIOB3	22	GPIOB3	ADC3	UART1_TXD	PWM_B0	SPI_CLK
GPIOB4	6	GPIOB4	ADC4	UART1_CTS	PWM_B1	I2C_SCL
GPIOB5	7	GPIOB5	ADC5	UART1_RTS	PWM_B2	I2C_SDA
GPIOB6	8	GPIOB6	ADC6	UART0_RXD	SPI_CS1	I2C_SCL
GPIOB7	9	GPIOB7	ADC7	UART0_TXD	I2C_SDA	-
GPIOB14	12	GPIOB14	USB_DP	PWM_B4	-	-

GPIOB15	11	GPIO15	USB_DM	PWM_B5	-	-
UART0_RXD	15	GPIOA8	UART2_CTS	PWM_A2	I2S_LRCK_0	-
UART0_TXD	16	GPIOA9	UART2_RTS	I2S_DOUT_0	-	-
UART1_TXD	27	GPIOA5	UART0_RTS	UART1_RTS	-	-
UART1_RXD	26	GPIOA4	UART0_CTS	UART1_CTS	-	-
UART2_TXD	20	GPIOA7	I2C_SDA	UART1_RTS	PWM_A1	I2S_BCLK_0
UART2_RXD	19	GPIOA6	I2C_SCL	UART1_CTS	PWM_A0	-

3.4. Application Interfaces

3.4.1. UARTs

The module serves as DCE (Data Communication Equipment) and provides 3 UARTs: the main UART1 and UART2 and the debug UART0.

Table 7: Pin Definition of UARTs

Pin Name	Pin No.	I/O	Description	Comment
UART1_TXD	27	DO	UART1 transmit	
UART1_RXD	26	DI	UART1 receive	
UART2_TXD	20	DO	UART2 transmit	
UART2_RXD	19	DI	UART2 transmit	
UART0_TXD	16	DO	UART0 transmit	Test points must be reserved.
UART0_RXD	15	DI	UART0 receive	

UART1 and UART2 can be used for data transmission. The default baud rate is 115200 bps, and the maximum baud rate can reach 6 Mbps.

The main UART connection between the module and the host is illustrated below.

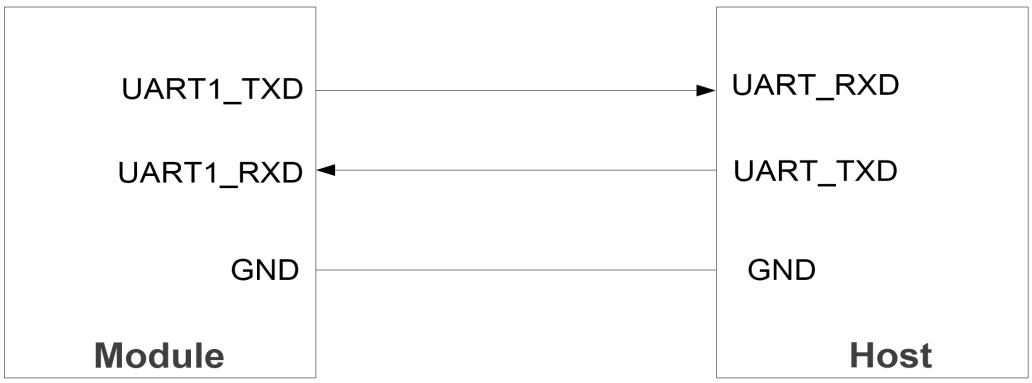

Figure 3: Main UART1 Connection

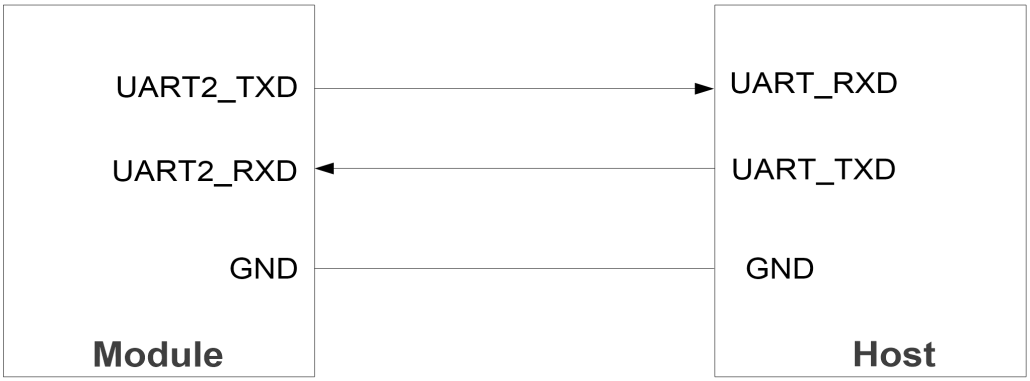

Figure 4: Main UART2 Connection

The debug UART0 supports 115200 bps baud rate by default, and is used for outputting partial logs with debugging tools. The following is a reference design of debug UART0. UART0 is also available for firmware upgrade and supports a default baud rate of 921600 bps.

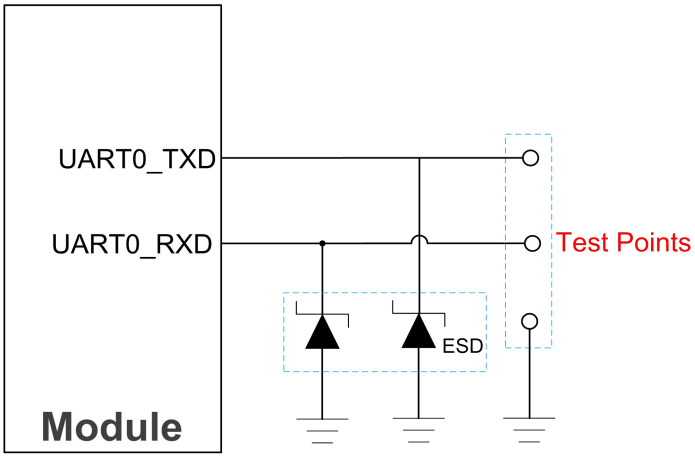

Figure 5: Debug UART0 Reference Design

3.4.2. SPI*

The module provides a SPI which only supports master mode with a maximum clock frequency of up to 20 MHz.

The following figure shows the connection between the host and the slave:

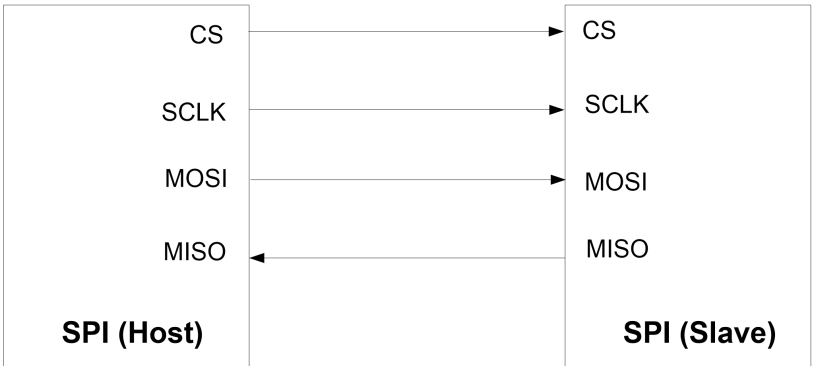

Figure 6: SPI Connection

Table 8: Pin Definition of SPI

Pin Name	Pin No.	Multiplexing Function	I/O	Description
GPIOB1	21	SPI_CS0	DO	SPI chip select (High power consumption)
GPIOB6	8	SPI_CS1	DO	SPI chip select (Low power consumption)
GPIOB3	22	SPI_CLK	DO	SPI clock
GPIOB0	23	SPI_MISO	DI	SPI master-in slave-out
GPIOB2	29	SPI_MOSI	DO	SPI master-out slave-in

3.4.3. I2C Interfaces

The module provides 3 I2C interfaces that support master mode only.

Table 9: Pin Definition of I2C Interfaces

Pin Name	Pin No.	Multiplexing Function	I/O	Description
GPIOB4	6	I2C_SCL	OD	I2C serial clock
GPIOB5	7	I2C_SDA	OD	I2C serial data
GPIOB6	8	I2C_SCL	OD	I2C serial clock
GPIOB7	9	I2C_SDA	OD	I2C serial data

UART2_RXD	19	I2C_SCL	OD	I2C serial clock
UART2_TXD	20	I2C_SDA	OD	I2C serial data

3.4.4. PWM Interfaces*

The module supports 8 PWM channels.

Table 10: Pin Definition of PWM Interfaces

Pin Name	Pin No.	Multiplexing Function	I/O	Description
GPIOB3	22	PWM_B0	DO	PWM out
GPIOB4	6	PWM_B1	DO	PWM out
GPIOB5	7	PWM_B2	DO	PWM out
GPIOB14	12	PWM_B4	DO	PWM out
GPIOB15	11	PWM_B5	DO	PWM out
UART0_RXD	15	PWM_A2	DO	PWM out
UART2_TXD	20	PWM_A1	DO	PWM out
UART2_RXD	19	PWM_A0	DO	PWM out

3.4.5. ADC Interfaces

The module supports 8 ADC interfaces, whose voltage range is 0–1.1 V. To improve ADC accuracy, surround ADC trace with ground.

Table 11: Pin Definition of ADC Interfaces

Pin Name	Pin No.	Multiplexing Function	I/O	Description
GPIOB0	45	ADC0	AI	General-purpose ADC interface
GPIOB1	46	ADC1	AI	General-purpose ADC interface
GPIOB2	47	ADC2	AI	General-purpose ADC interface
GPIOB3	48	ADC3	AI	General-purpose ADC interface

GPIOB4	13	ADC4	AI	General-purpose ADC interface
GPIOB5	14	ADC5	AI	General-purpose ADC interface
GPIOB6	15	ADC6	AI	General-purpose ADC interface
GPIOB7	16	ADC7	AI	General-purpose ADC interface

Table 12: ADC Features

Parameter	Min.	Typ.	Max.	Unit
ADC Voltage Range	0	-	1.1	V
ADC Resolution Rate	-	TBD	-	bit

3.4.6. USB Interface

The module provides a integrated Universal Serial Bus (USB) interface as device which complies with the USB 2.0 specification and supports high-speed (480 Mbps) mode and is backward-compatible with full-speed (12 Mbps) mode.

Table 13: Pin Definition of USB Interface

Pin Name	Pin No.	Multiplexing Function	I/O	Description	Comment
GPIOB14	12	USB_DP	DIO	USB differential data (+)	Requires differential impedance of 90 Ω. USB 2.0 compliant.
GPIOB15	11	USB_DM	DIO	USB differential data (-)	

3.5. RF Antenna Interfaces

Appropriate antenna type and design should be used with matched antenna parameters according to

specific application. It is required to perform a comprehensive functional test for the RF design before mass production of terminal products. The entire content of this chapter is provided for illustration only. Analysis, evaluation and determination are still necessary when designing target products.

The module supports pin antenna (ANT_WIFI/BT), PCB antenna, coaxial RF connector, which are all optional. The coaxial RF connector is not mounted on the module when using pin antenna or PCB antenna.

3.5.1. Operating Frequencies

Table 14: Operating Frequencies (Unit: GHz)

Feature	Frequency
2.4 GHz Wi-Fi	2.400–2.4835
5 GHz Wi-Fi	5.150–5.855
Bluetooth	2.400–2.4835

3.5.2. Pin Antenna (Optional)

Table 15: ANT_WIFI/BT Pin Definition

Pin Name	Pin No.	I/O	Description	Comment
ANT_WIFI/BT	2	AIO	Wi-Fi/Bluetooth antenna interface	50 Ω impedance.

3.5.2.1. Reference Design

The circuit of RF antenna interface is shown below. For better RF performance, it is necessary to reserve a π matching circuit and add ESD protection components. Reserved matching components such as R1, C1, C2, and D1 should be placed as close to the antenna as possible. C1, C2, and D1 are not mounted by default. The parasitic capacitance of TVS should be less than 0.05 pF and R1 is recommended to be 0 Ω.

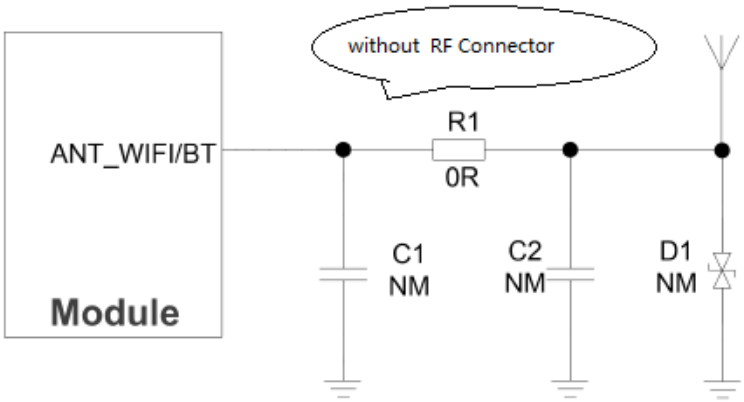

Figure 4: RF Antenna Reference Design

Note: Pin antenna does not have an antenna connector, the antenna directly enters the chip pins through the matching circuit

3.5.2.2. Antenna Design Requirements

Table 16: Antenna Design Requirements

Parameter	Requirement
Frequency Range (GHz)	● 2.4 GHz: 2.400~2.4835 ● 5 GHz: 5.150~5.850
Cable Insertion Loss (dB)	< 1
VSWR	≤ 2 (Typ.)
Gain (dBi)	2.4G Max Gain :2 5G Max Gain:0.9
Max. input power (W)	50
Input impedance (Ω)	50
Polarization type	Vertical

3.5.2.3. RF Routing Guidelines

For user's PCB, the characteristic impedance of all RF traces should be controlled to 50 Ω. The impedance of the RF traces is usually determined by the trace width (W), the materials' dielectric constant, the height from the reference ground to the signal layer (H), and the spacing between RF traces and grounds (S). Microstrip or coplanar waveguide is typically used in RF layout to control characteristic impedance. The following are reference designs of microstrip or coplanar waveguide with different PCB structures.

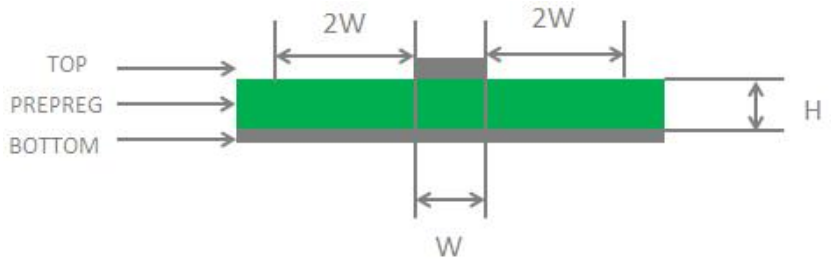

Figure 5: Microstrip Design on a 2-layer PCB

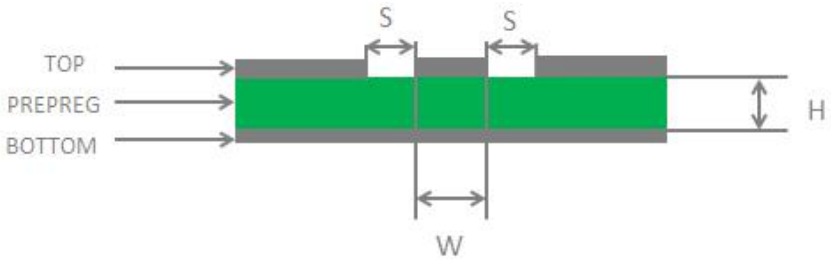

Figure 6: Coplanar Waveguide Design on a 2-layer PCB

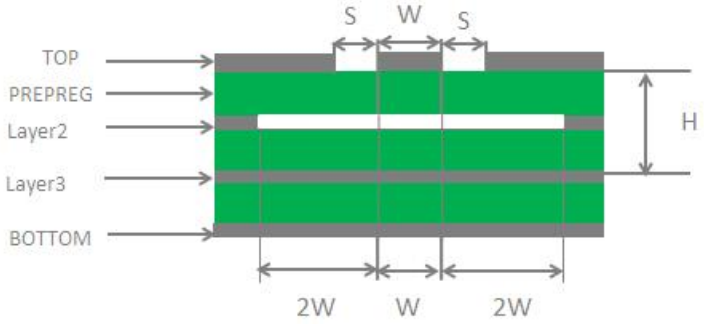

Figure 7: Coplanar Waveguide Design on a 4-layer PCB (Layer 3 as Reference Ground)

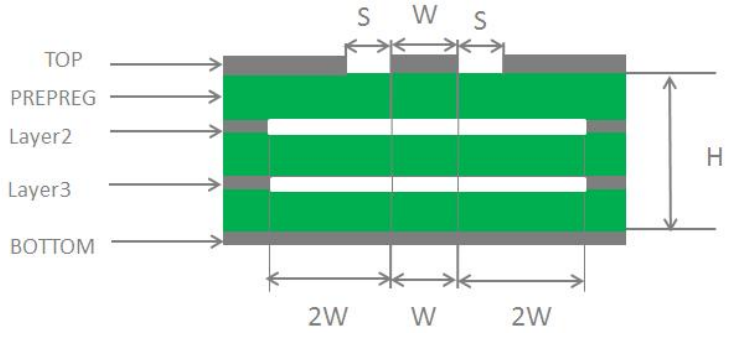

Figure 8: Coplanar Waveguide Design on a 4-layer PCB (Layer 4 as Reference Ground)

To ensure RF performance and reliability, follow the principles below in RF layout design:

- Use an impedance simulation tool to control the characteristic impedance of RF traces to 50 Ω.
- GND pins adjacent to RF pins should not be designed as thermal relief pads, and should be fully connected to the ground.
- The distance between the RF pins and the RF connector should be as short as possible and all right-angle traces should be changed to curved ones. The recommended trace angle is 135°.
- There should be clearance under the signal pin of the antenna connector or solder joint.
- The reference ground of RF traces should be complete. In addition, adding some ground vias around RF traces and the reference ground could help to improve RF performance. The distance between the ground vias and RF traces should be at least twice the width of RF signal traces (2 × W).
- Keep RF traces away from interference sources, and avoid intersection and paralleling between traces on adjacent layers.

For more details about RF layout, see ***document [2]***.

3.5.3. PCB Antenna (Optional)

Table 17: PCB Antenna Specifications

Parameter	Requirement
Frequency Range (GHz)	● 2.400–2.500 ● 5.150–5.850
Input Impedance (Ω)	50
VSWR	≤ 3
Gain (dBi)	2.4G Max Gain :2 5G Max Gain:0.9
Efficiency	26 % (Typ.)

When using the PCB antenna on the module, the module should be placed at the side of the motherboard. The distance between the PCB antenna and connectors, vias, traces, ethernet port and any other metal components on the motherboard should be at least 16 mm. All layers in the PCB of the motherboard under the PCB antenna should be designed as a keepout area.

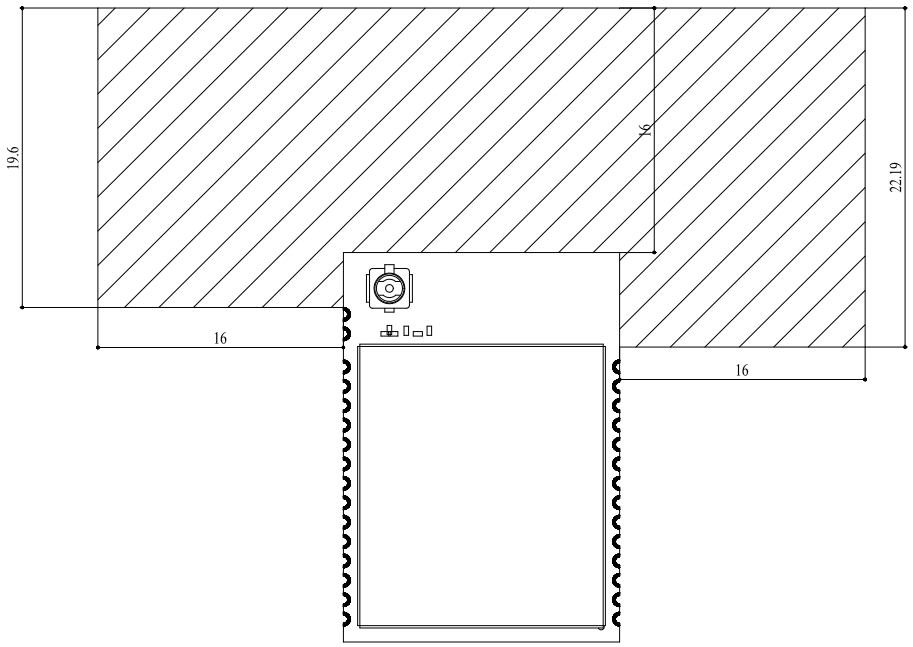

Figure 9: Keepout Area on Motherboard

During PCB design, do not route traces across the RF test point at the bottom of the module to ensure the module performance.

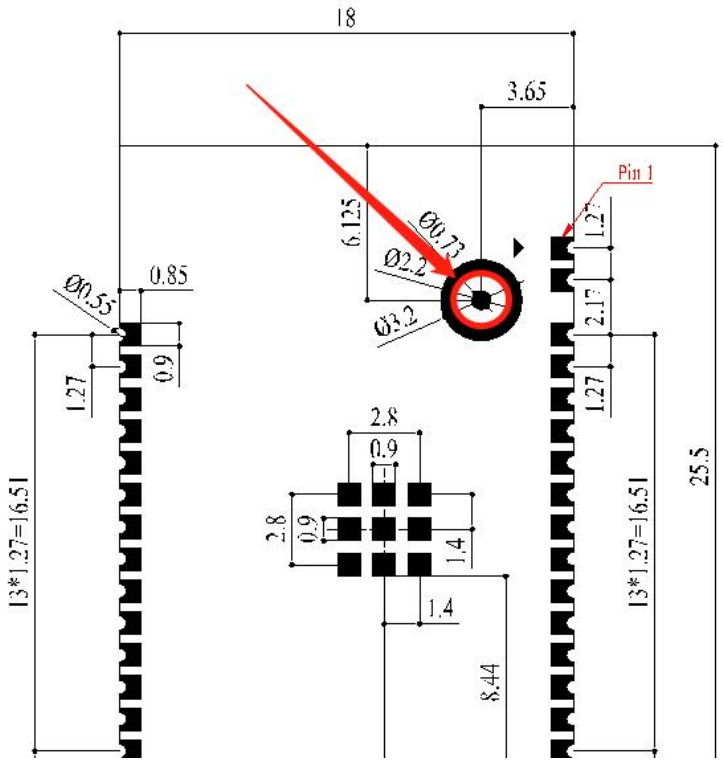

Figure 10: Prohibited Area for Routing

3.5.4. Coaxial RF Connector (Optional)

The mechanical dimensions of the receptacle supported by the module are as follows.

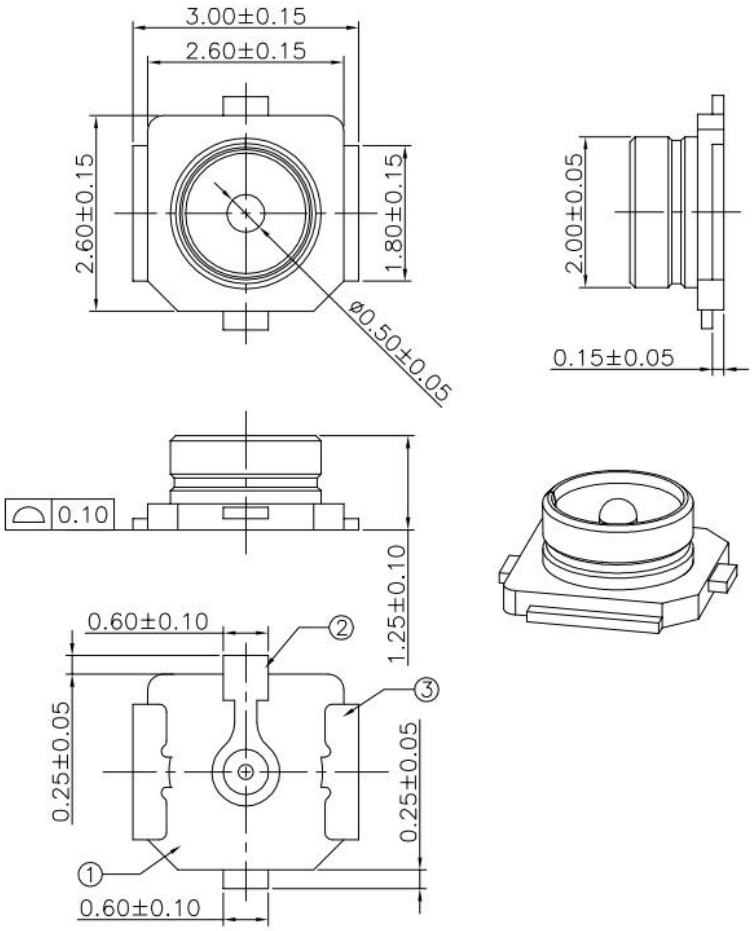

Figure 11: Dimensions of the Receptacle (Unit: mm)

Table 18: Major Specifications of the RF Connector

Item	Specification
Nominal Frequency Range	DC to 6 GHz
Nominal Impedance	50 Ω
Temperature Rating	-40 °C to +85 °C
Voltage Standing Wave Ratio (VSWR)	Meet the requirements of: Max. 1.3 (DC–3 GHz) Max. 1.45 (3–6 GHz)

The mated plug listed in the following figure can be used to match the connector.

	U.FL-LP-040	U.FL-LP-066	U.FL-LP(V)-040	U.FL-LP-062	U.FL-LP-088
Part No.	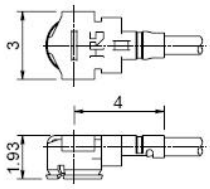	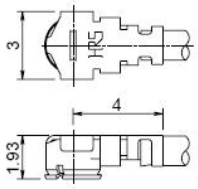	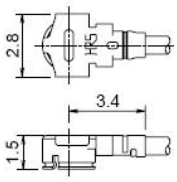	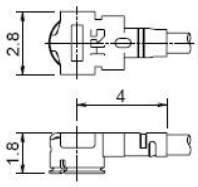	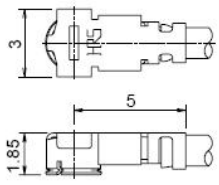
Mated Height	2.5mm Max. (2.4mm Nom.)	2.5mm Max. (2.4mm Nom.)	2.0mm Max. (1.9mm Nom.)	2.4mm Max. (2.3mm Nom.)	2.4mm Max. (2.3mm Nom.)
Applicable cable	Dia. 0.81mm Coaxial cable	Dia. 1.13mm and Dia. 1.32mm Coaxial cable	Dia. 0.81mm Coaxial cable	Dia. 1mm Coaxial cable	Dia. 1.37mm Coaxial cable
Weight (mg)	53.7	59.1	34.8	45.5	71.7
RoHS	YES				

Figure 12: Specifications of Mated Plugs (Unit: mm)

The following figure describes the space factor of the mated connectors.

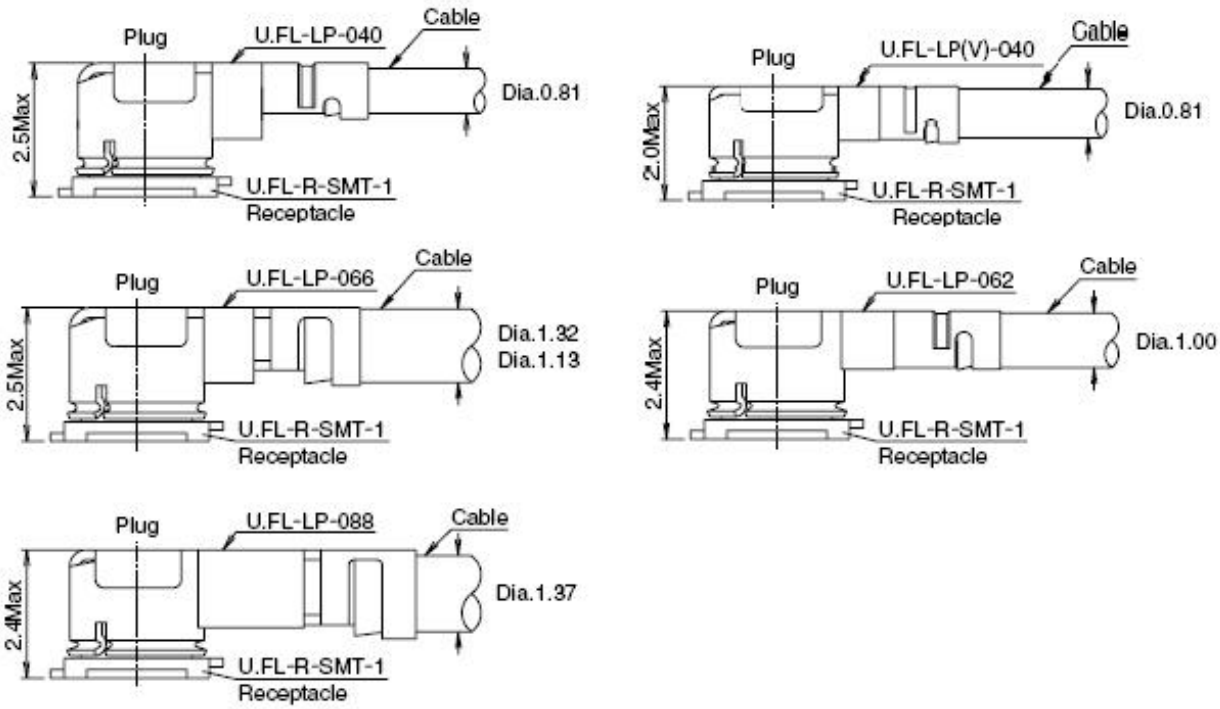

Figure 13: Space Factor of the Mated Connectors (Unit: mm)

For more details, visit http://www.hirose.com.

3.5.4.1. Assemble Coaxial Cable Plug Manually

The pictures for plugging in a coaxial cable plug is shown below, θ = 90° is acceptable, while θ ≠ 90° is not.

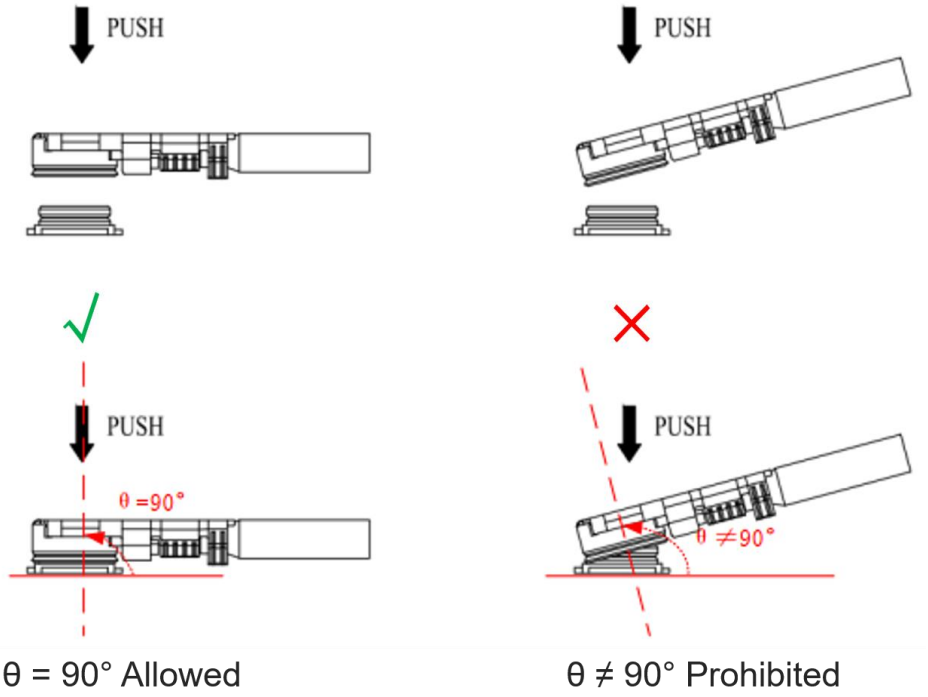

Figure 14: Plug in a Coaxial Cable Plug

The pictures of pulling out the coaxial cable plug is shown below, θ = 90° is acceptable, while θ ≠ 90° is not.

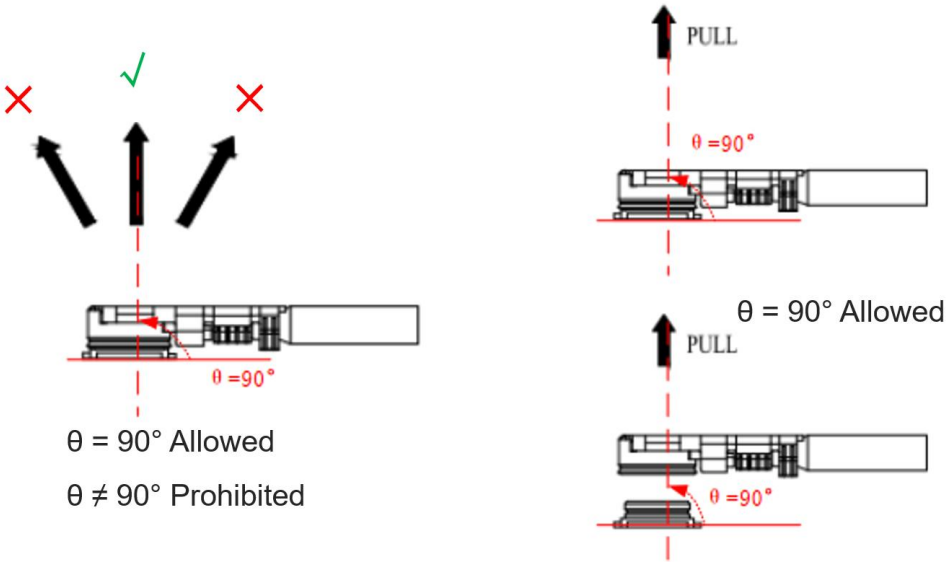

Figure 15: Pull out a Coaxial Cable Plug

3.5.4.2. Assemble Coaxial Cable Plug with Jig

The pictures of installing the coaxial cable plug with a jig is shown below, θ = 90° is acceptable, while θ ≠ 90° is not.

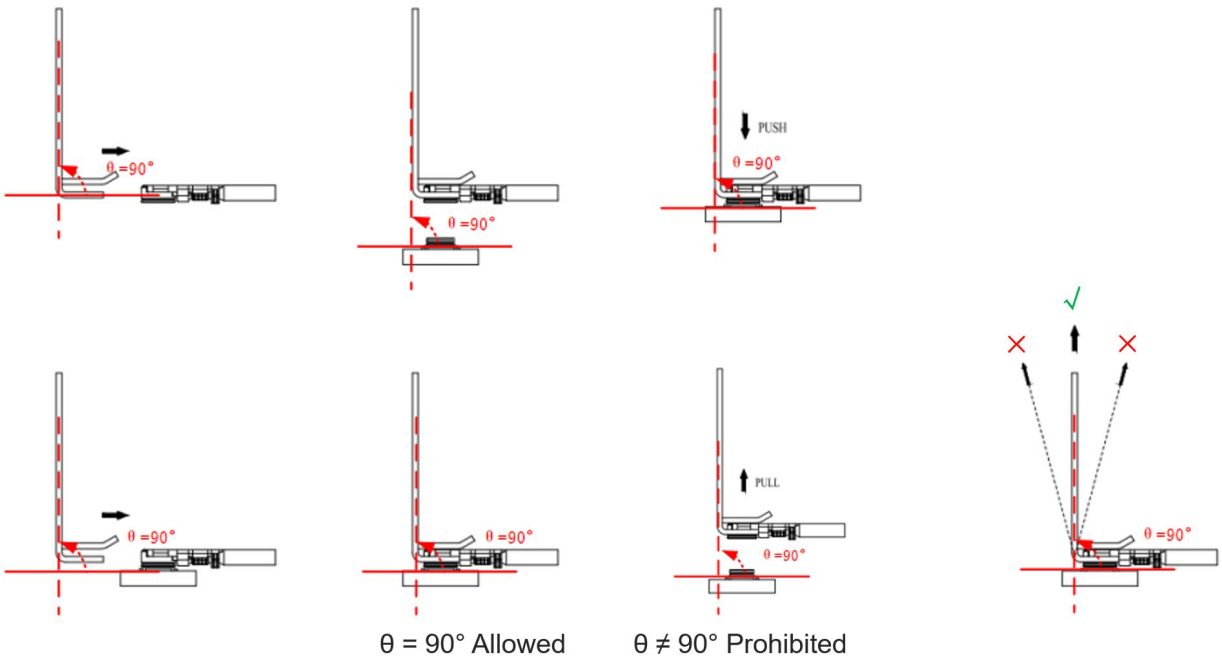

Figure 16: Install the Coaxial Cable Plug with Jig

3.5.4.3. Recommended Manufacturers of RF Connector and Cable

RF connectors and cables by I-PEX are recommended. For more details, visit https://www.i-pex.com.

4 Operating Characteristics

4.1. Power Supply

Power supply pin and ground pins of the module are defined in the following table.

Table 19: Pin Definition of Power Supply and GND Pins

Pin Name	Pin No.	I/O	Description	Min.	Typ.	Max.	Unit
VBAT	4	PI	Power supply for the module	3.0	3.3	3.6	V
GND	1, 3, 30, 31–39						

4.1.1. Reference Design for Power Supply

The module is powered by VBAT, and it is recommended to use a power supply chip that can provide more than 0.5 A output current. For better power supply performance, it is recommended to parallel a 22 μF decoupling capacitor, and two filter capacitors (1 μF and 100 nF) near the module's VBAT pin. In addition, it is recommended to add a TVS near the VBAT to improve the surge voltage bearing capacity of the module. In principle, the longer the VBAT trace is, the wider it should be.

VBAT reference circuit is shown below:

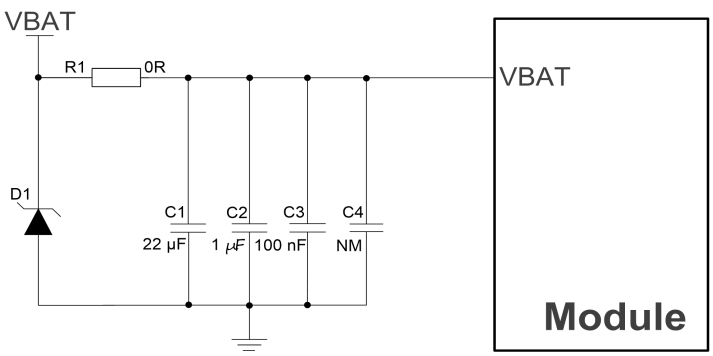

Figure 17: VBAT Reference Circuit

4.2. Turn On

After the VBAT is powered up, pull the CHIP_EN up for 6 ms when turn on the module for the first time. After the module is turned on, the pin CHIP_EN monitors the real-time level changes to realize turn-on/off of the module. When the module is completely powered off, the CHIP_EN must be pulled up for 6 ms to start the module again.

Table 20: Pin Definition of CHIP_EN

Pin Name	Pin No.	I/O	Description	Comment
CHIP_EN	5	DI	Enable the module	Hardware enable. Internally pulled down with a 200 kΩ resistor. Active high.

The turn-on timing is shown below:

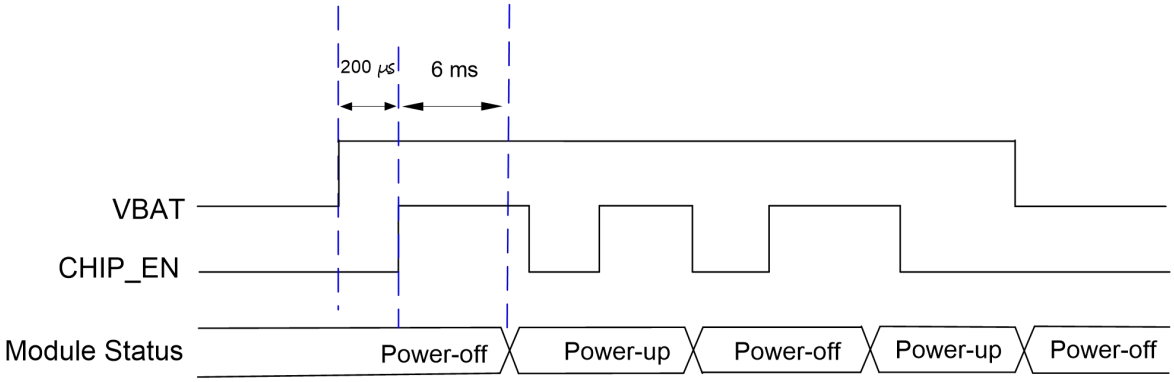

Figure 18: Turn-on Timing

4.3. Download Mode

After the module is powered on, keep the pin input of GPIOB6 and GPIOB7 at low level and press CHIP_EN to start the module, and the module will enter the download mode. Firmware can be downloaded through UART0 in download mode.

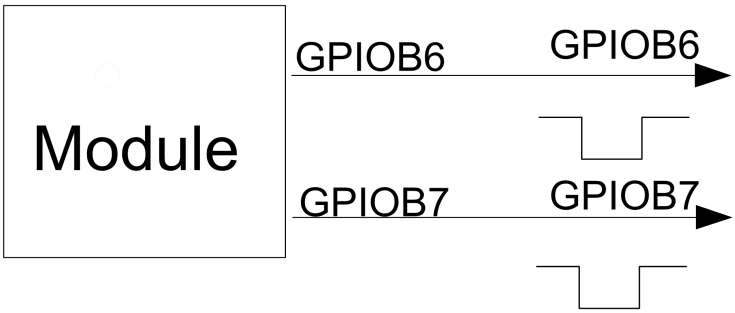

Figure 19: Reference Design for Download Mode

5 RF Performances

5.1. Wi-Fi Performances

Table 21: Wi-Fi Performances

Operating Frequency
2.4 GHz: 2.400–2.4835 GHz **5 GHz:** 5.150–5.850 GHz
Modulation
BPSK, QPSK, CCK, 16QAM, 64QAM，256QAM, 1024QAM
Operating Mode
● AP ● STA
Transmission Data Rate
● 802.11b: 1 Mbps, 2 Mbps, 5.5 Mbps, 11 Mbps ● 802.11a/g: 6 Mbps, 9 Mbps, 12 Mbps, 18 Mbps, 24 Mbps, 36 Mbps, 48 Mbps, 54 Mbps ● 802.11n: HT20 (MCS 0–7), HT40 (MCS 0–7) ● 802.11ac: VHT20（MCS 0–8）,VHT40(MCS 0–9) ● 802.11ax: HE20 (MCS 0–11), HE40 (MCS 0–11)

Condition		**EVM**	**Unit: dBm, Tolerance: ±2 dB**	
			Transmitting Power @ Typ.	**Receiving Sensitivity @ Typ.**
2.4 GHz	802.11b @ 1 Mbps	≤ 35 %	TBD	TBD
	802.11b @ 11 Mbps		TBD	TBD
	802.11g @ 6 Mbps	≤ -5 dB	TBD	TBD
	802.11g @ 54 Mbps	≤ -25 dB	TBD	TBD
	802.11n, HT20 @ MCS 0	≤ -5 dB	TBD	TBD
	802.11n, HT20 @ MCS 7	≤ -27 dB	TBD	TBD

	802.11n, HT40 @ MCS 0	≤ -5 dB	TBD	TBD
	802.11n, HT40 @ MCS 7	≤ -27 dB	TBD	TBD
	802.11ax, HE20 @ MCS 0	≤ -5 dB	TBD	TBD
	802.11ax, HE20 @ MCS 11	≤ -35 dB	TBD	TBD
	802.11ax, HE40 @ MCS 0	≤ -5 dB	TBD	TBD
	802.11ax, HE40 @ MCS 11	≤ -35 dB	TBD	TBD
5 GHz	802.11a @ 6 Mbps	≤ -5 dB	TBD	TBD
	802.11a @ 54 Mbps	≤ -25 dB	TBD	TBD
	802.11n, HT20 @ MCS 0	≤ -5 dB	TBD	TBD
	802.11n, HT20 @ MCS 7	≤ -27 dB	TBD	TBD
	802.11n, HT40 @ MCS 0	≤ -5 dB	TBD	TBD
	802.11n, HT40 @ MCS 7	≤ -27 dB	TBD	TBD
	802.11ac, VHT20 @ MCS 0	≤ -5 dB	TBD	TBD
	802.11ac, VHT20 @ MCS 8	≤ -27 dB	TBD	TBD
	802.11ac, VHT40 @ MCS 0	≤ -5 dB	TBD	TBD
	802.11ac, VHT40 @ MCS 9	≤ -32 dB	TBD	TBD
	802.11ax, HE20 @ MCS 0	≤ -5 dB	TBD	TBD
	802.11ax, HE20 @ MCS 9	≤ -32 dB	TBD	TBD
	802.11ax, HE40 @ MCS 0	≤ -5 dB	TBD	TBD
	802.11ax, HE40 @ MCS 9	≤ -30 dB	TBD	TBD

5.2. Bluetooth Performances

Table 22: Bluetooth Performances

Operating Frequency		
2.400~2.4835 GHz		
Modulation		
GFSK, π/4-DQPSK, 8-DPSK		
Operating Mode		
● Classic Bluetooth (BR + EDR) ● Bluetooth Low Energy (BLE)		
Condition	**Unit: dBm, Tolerance: ±3 dB**	
	Transmitting Power @ Typ.	**Receiving Sensitivity @ Typ.**
BR	TBD	TBD
EDR (π/4-DQPSK)	TBD	TBD
EDR (8-DPSK)	TBD	TBD
BLE	TBD	TBD

6 Electrical Characteristics & Reliability

6.1. Absolute Maximum Ratings

Absolute maximum ratings for power supply and voltage on digital and analog pins of the module are listed in the following table.

Table 23: Absolute Maximum Ratings (Unit: V)

Parameter	Min.	Max.
VBAT	-0.3	3.6
Voltage at Digital Pins	-0.3	3.6
Voltage at ADC[0:7]	0	1.1

6.2. Power Supply Ratings

Table 24: Module Power Supply Ratings (Unit: V)

Parameter	Description	Condition	Min.	Typ.	Max.
VBAT	Power supply for the module	The actual input voltages must be kept between the minimum and maximum values.	3.0	3.3	3.6

6.3. Wi-Fi Power Consumption

Table 25: Power Consumption in Low Power Modes

Mode	Typ.	Unit
Light sleep	TBD	μA
Deep sleep	TBD	μA
DTIM1	TBD	mA
DTIM3	TBD	mA
OFF	TBD	μA

Table 26: Power Consumption in Non-signaling Modes

Condition		Typ.	Unit
2.4 GHz	802.11b, Tx 1 Mbps @ TBD	TBD	mA
	802.11b, Tx 11 Mbps @ TBD	TBD	mA
	802.11g, Tx 6 Mbps @ TBD	TBD	mA
	802.11g, Tx 54 Mbps @ TBD	TBD	mA
	802.11n, HT20 Tx MCS 0 @ TBD	TBD	mA
	802.11n, HT20 Tx MCS 7 @ TBD	TBD	mA
	802.11n, HT40 Tx MCS 0 @ TBD	TBD	mA
	802.11n, HT40 Tx MCS 7 @ TBD	TBD	mA
	802.11ax, HE20 Tx MCS 0 @ TBD	TBD	mA
	802.11ax, HE20 Tx MCS 11 @ TBD	TBD	mA
	802.11ax, HE40 Tx MCS 0 @ TBD	TBD	mA
	802.11ax, HE40 Tx MCS 11 @ TBD	TBD	mA
5 GHz	802.11a, Tx 6 Mbps @ TBD	TBD	mA

	802.11a, Tx 54 Mbps @ TBD	TBD	mA
	802.11n, HT20 Tx MCS 0 @ TBD	TBD	mA
	802.11n, HT20 Tx MCS 7 @ TBD	TBD	mA
	802.11n, HT40 Tx MCS 0 @ TBD	TBD	mA
	802.11n, HT40 Tx MCS 7 @ TBD	TBD	mA
	802.11ac, VHT20 Tx MCS 0 @ TBD	TBD	mA
	802.11ac, VHT20 Tx MCS 8 @ TBD	TBD	mA
	802.11ac, VHT40 Tx MCS 0 @ TBD	TBD	mA
	802.11ac, VHT40 Tx MCS 9 @ TBD	TBD	mA
	802.11ax, HE20 Tx MCS 0 @ TBD	TBD	mA
	802.11ax, HE20 Tx MCS 9 @ TBD	TBD	mA
	802.11ax, HE40 Tx MCS 0 @ TBD	TBD	mA
	802.11ax, HE40 Tx MCS 9 @ TBD	TBD	mA

6.4. Digital I/O Characteristics

Table 27: VBAT I/O Characteristics (Unit: V)

Parameter	Description	Min.	Max.
V_{IH}	High-level Input Voltage	0.7 × VBAT	VBAT
V_{IL}	Low-level Input Voltage	0	0.3 × VBAT
V_{OH}	High-level Output Voltage	0.9 × VBAT	VBAT
V_{OL}	Low-level Output Voltage	-0	0.1 × VBAT

6.5. ESD Protection

Static electricity occurs naturally and may damage the module. Therefore, applying proper ESD countermeasures and handling methods is imperative. For example, wear anti-static gloves during the development, production, assembly and testing of the module; add ESD protection components to the ESD sensitive interfaces and points in the product design.

Table 28: ESD Characteristics (Unit: kV)

Model	Test Result	Standard
Human Body Model (HBM)	±3	ANSI/ESDA/JEDEC JS-001-2017
Charged Device Model (CDM)	±0.35	ANSI/ESDA/JEDEC JS-002-2018

7 Mechanical Information

This chapter describes the mechanical dimensions of the module. All dimensions are measured in millimeters (mm), and the dimensional tolerances are ±0.2 mm unless otherwise specified.

7.1. Mechanical Dimensions

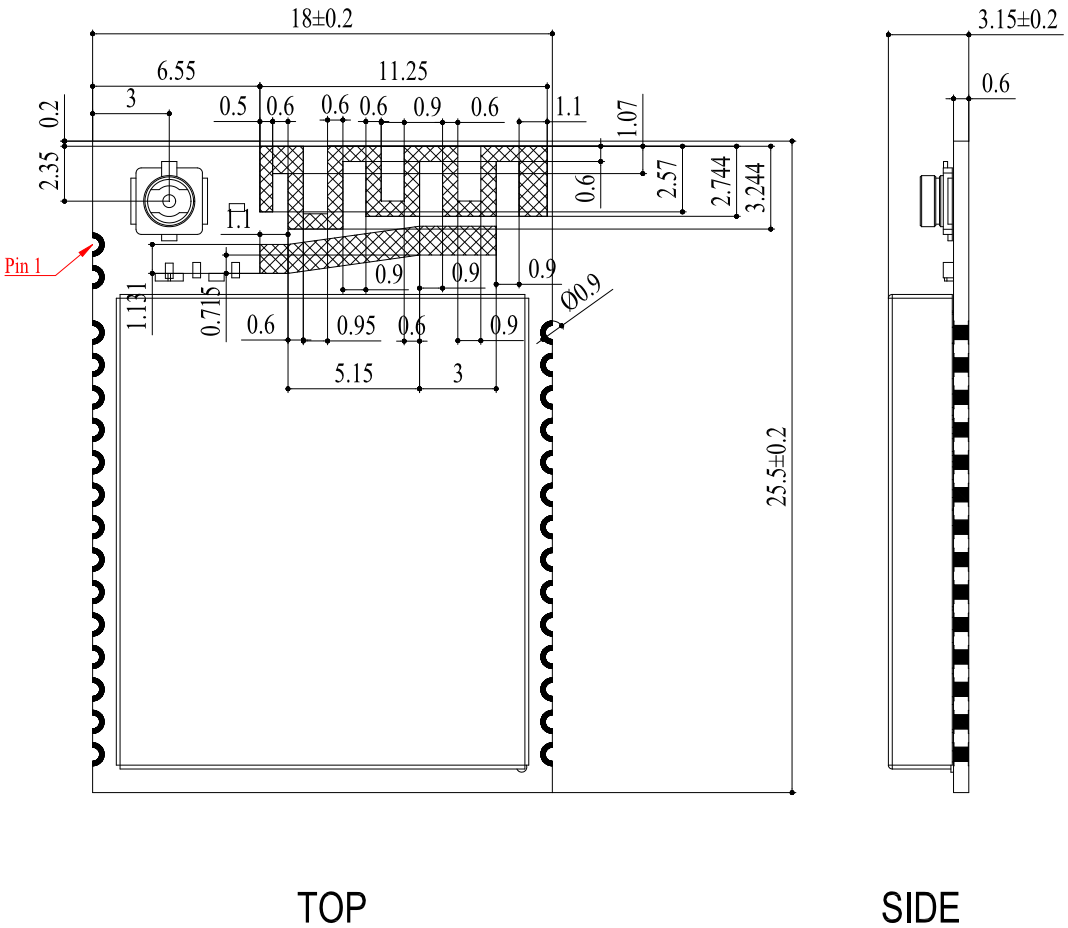

Figure 20: Top and Side Dimensions

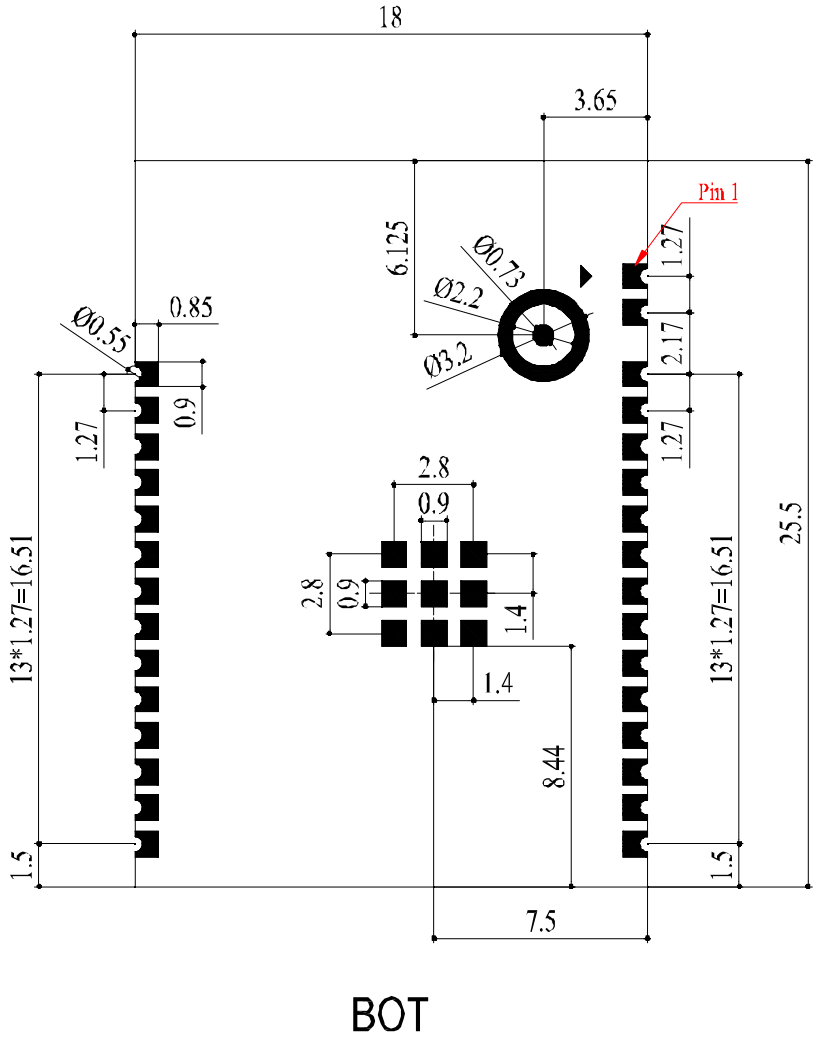

Figure 21: Bottom Dimensions (Bottom View)

NOTE

The package warpage level of the module conforms to the *JEITA ED-7306* standard.

7.2. Recommended Footprint

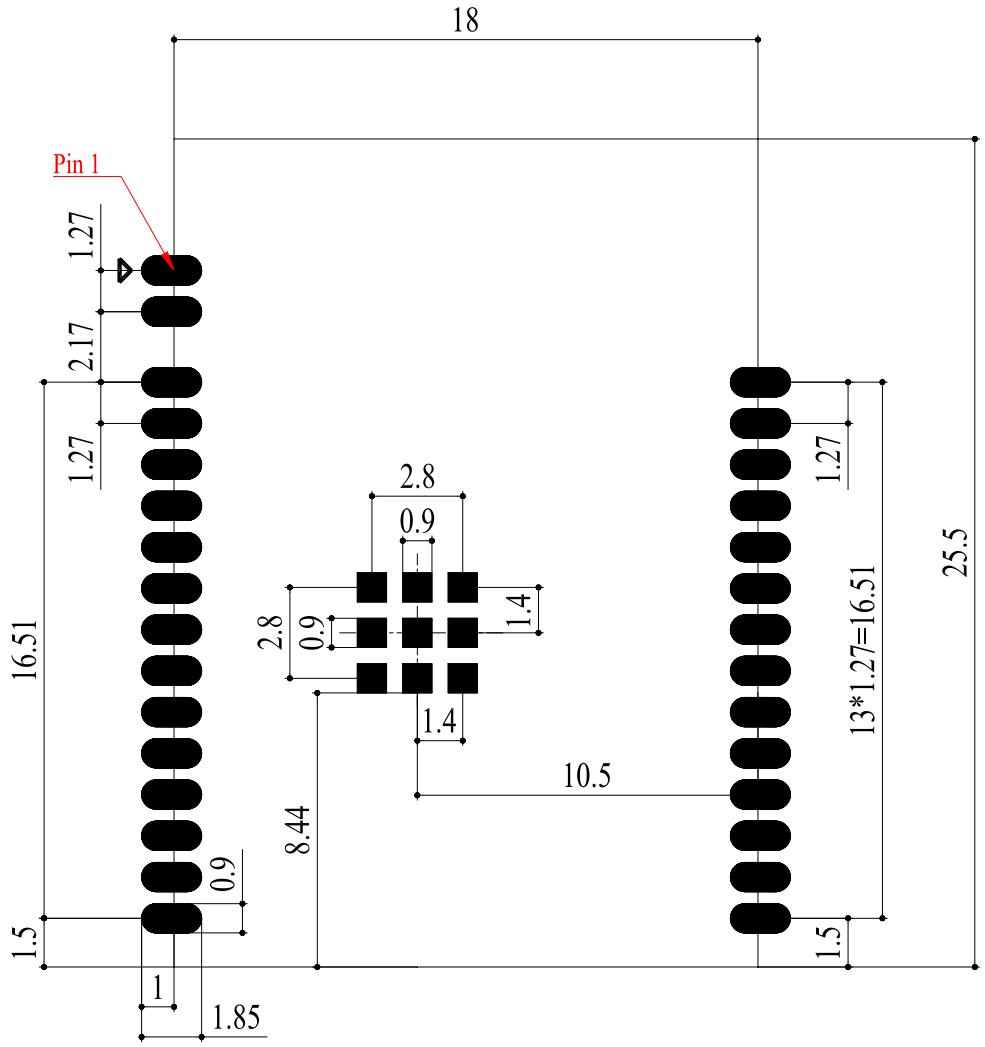

Figure 22: Recommended Footprint

NOTE

Keep at least 3 mm between the module and other components on the motherboard to improve soldering quality and maintenance convenience.

7.3. Top and Bottom Views

Figure 23: Top and Bottom Views (Pin Antenna)

Figure 24: Top and Bottom Views (PCB Antenna)

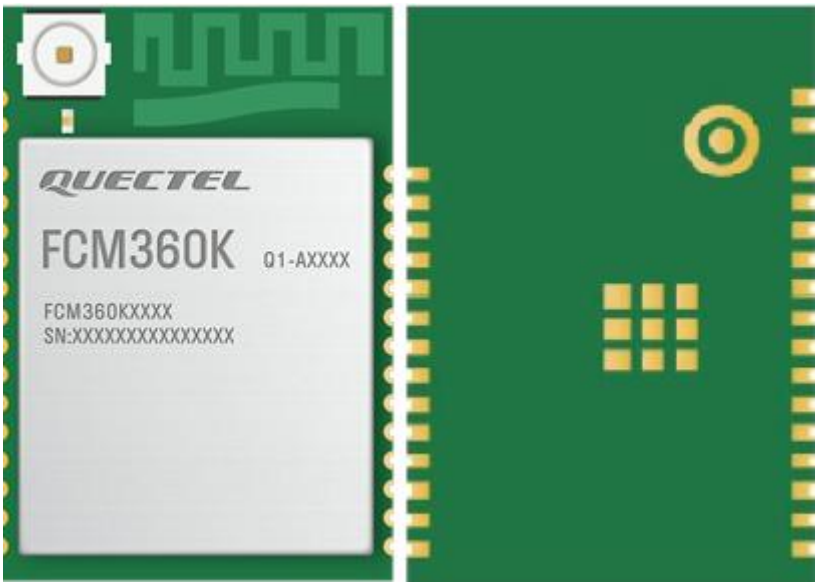

Figure 25: Top and Bottom Views (Coaxial RF Connector)

NOTE

1. Images above are for illustrative purposes only and may differ from the actual module. For authentic appearance and label, please refer to the module received from Quectel.
2. The coaxial RF connector is not mounted on the module when using PCB antenna or pin antenna (ANT_WIFI/BT).

8 Storage, Manufacturing & Packaging

8.1. Storage Conditions

The module is provided with vacuum-sealed packaging. MSL of the module is rated as 3. The storage requirements are shown below.

1. Recommended Storage Condition: the temperature should be 23 ±5 °C and the relative humidity should be 35–60 %.

2. Shelf life (in a vacuum-sealed packaging): 12 months in Recommended Storage Condition.

3. Floor life: 168 hours [4] in a factory where the temperature is 23 ±5 °C and relative humidity is below 60 %. After the vacuum-sealed packaging is removed, the module must be processed in reflow soldering or other high-temperature operations within 168 hours. Otherwise, the module should be stored in an environment where the relative humidity is less than 10 % (e.g., a dry cabinet).

4. The module should be pre-baked to avoid blistering, cracks and inner-layer separation in PCB under the following circumstances:

   - The module is not stored in Recommended Storage Condition;
   - Violation of the third requirement mentioned above;
   - Vacuum-sealed packaging is broken, or the packaging has been removed for over 24 hours;
   - Before module repairing.

5. If needed, the pre-baking should follow the requirements below:

   - The module should be baked for 8 hours at 120 ±5 °C;
   - The module must be soldered to PCB within 24 hours after the baking, otherwise it should be put in a dry environment such as in a dry cabinet.

[4] This floor life is only applicable when the environment conforms to *IPC/JEDEC J-STD-033*. It is recommended to start the solder reflow process within 24 hours after the package is removed if the temperature and moisture do not conform to, or are not sure to conform to *IPC/JEDEC J-STD-033*. And do not unpack the modules in large quantities until they are ready for soldering.

NOTE

1. To avoid blistering, layer separation and other soldering issues, extended exposure of the module to the air is forbidden.
2. Take out the module from the package and put it on high-temperature-resistant fixtures before baking. If shorter baking time is desired, see *IPC/JEDEC J-STD-033* for the baking procedure.
3. Pay attention to ESD protection, such as wearing anti-static gloves, when touching the modules.

8.2. Manufacturing and Soldering

Push the squeegee to apply the solder paste on the surface of stencil, thus making the paste fill the stencil openings and then penetrate to the PCB. Apply proper force on the squeegee to produce a clean stencil surface on a single pass. To guarantee module soldering quality, the thickness of stencil for the module is recommended to be 0.15–0.18 mm. For more details, see ***document [3]***.

The recommended peak reflow temperature should be 235–246 ºC, with 246 ºC as the absolute maximum reflow temperature. To avoid damage to the module caused by repeated heating, it is recommended that the module should be mounted only after reflow soldering for the other side of PCB has been completed. The recommended reflow soldering thermal profile (lead-free reflow soldering) and related parameters are shown below.

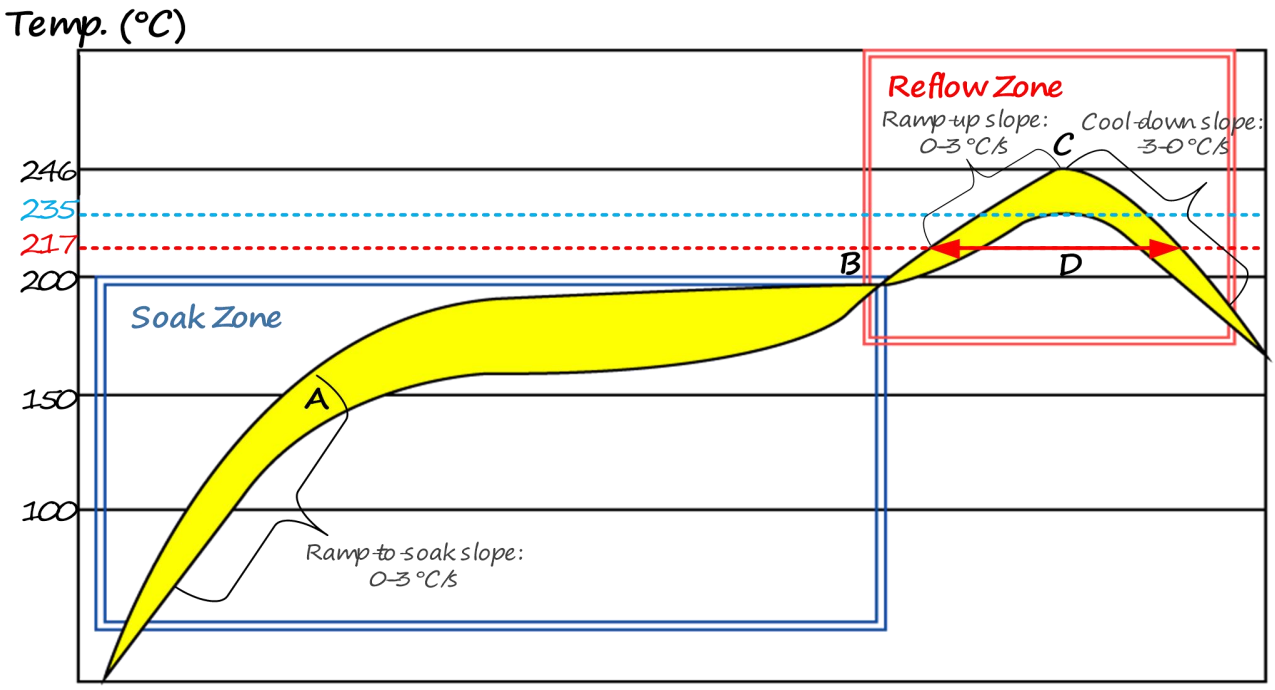

Figure 26: Recommended Reflow Soldering Thermal Profile

Table 29: Recommended Thermal Profile Parameters

Factor	Recommended Value
Soak Zone	
Ramp-to-soak slope	0–3 °C/s
Soak time (between A and B: 150 °C and 200 °C)	70–120 s
Reflow Zone	
Ramp-up slope	0–3 °C/s
Reflow time (D: over 217 °C)	40–70 s
Max. temperature	235–246 °C
Cool-down slope	-3–0 °C/s
Reflow Cycle	
Max. reflow cycle	1

NOTE

1. The above profile parameter requirements are for the measured temperature of solder joints. Both the hottest and coldest spots of solder joints on the PCB should meet the above requirements.
2. During manufacturing and soldering, or any other processes that may contact the module directly, NEVER wipe the module's shielding can with organic solvents, such as acetone, ethyl alcohol, isopropyl alcohol, trichloroethylene, etc. Otherwise, the shielding can may become rusted.
3. The shielding can for the module is made of Cupro-Nickel base material. It is tested that after 12 hours' Neutral Salt Spray test, the laser engraved label information on the shielding can is still clearly identifiable and the QR code is still readable, although white rust may be found.
4. If a conformal coating is necessary for the module, do NOT use any coating material that may chemically react with the PCB or shielding cover, and prevent the coating material from flowing into the module.
5. Avoid using ultrasonic technology for module cleaning since it can damage crystals inside the module.
6. Due to the complexity of the SMT process, please contact Quectel Technical Support in advance for any situation that you are not sure about, or any process (e.g. selective soldering, ultrasonic soldering) that is not mentioned in ***document [3]***.

8.3. Packaging Specifications

This chapter describes only the key parameters and process of packaging. All figures below are for reference only. The appearance and structure of the packaging materials are subject to the actual delivery.

8.3.1. Carrier Tape

Carrier tape dimensions are detailed below:

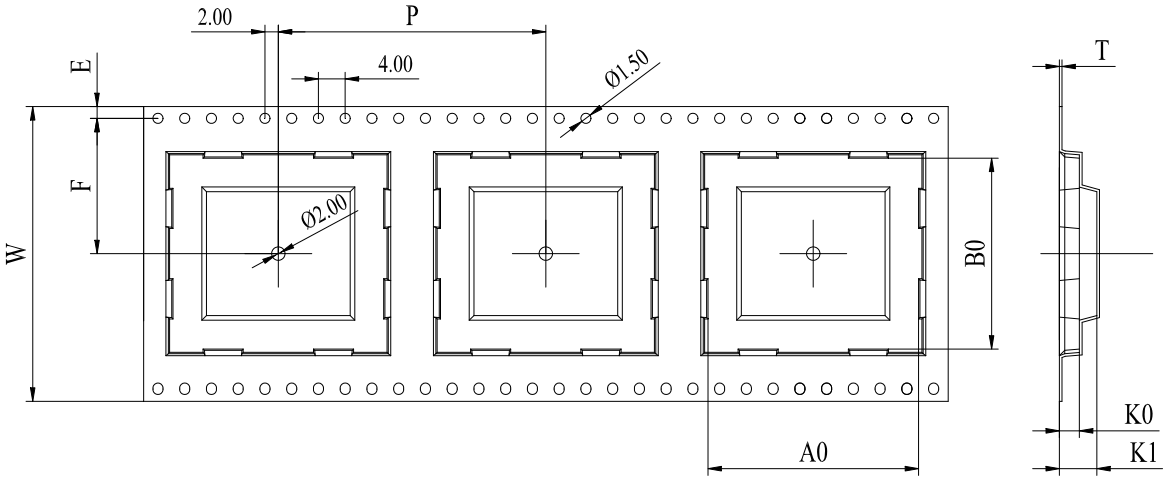

Figure 27: Tape Specifications

Table 30: Carrier Tape Dimension Table (Unit: mm)

W	P	T	A0	B0	K0	K1	F	E
44	32	0.4	18.4	25.9	3.7	6.8	20.2	1.75

8.3.2. Plastic Reel

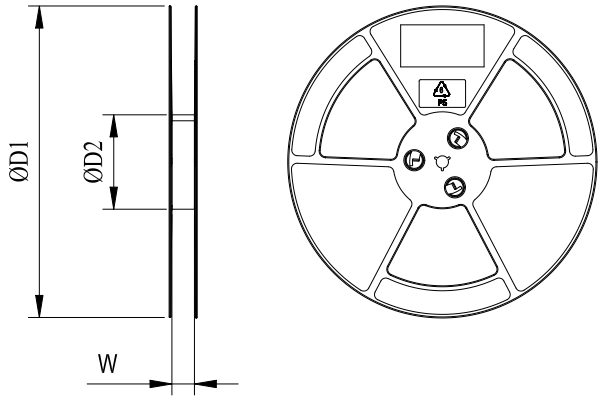

Figure 28: Reel Specifications

Table 31: Reel Dimensions (Unit: mm)

øD1	øD2	W
330	100	44.5

8.3.3. Mounting Direction

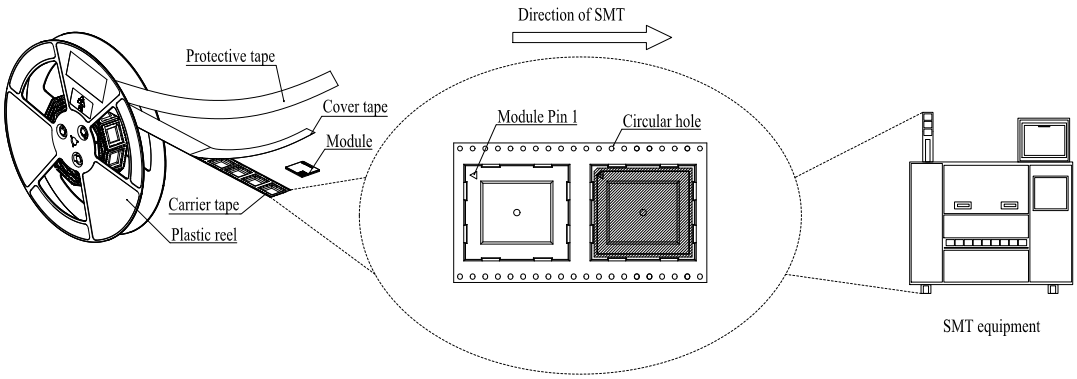

Figure 29: Mounting Direction

8.3.4. Packaging Process

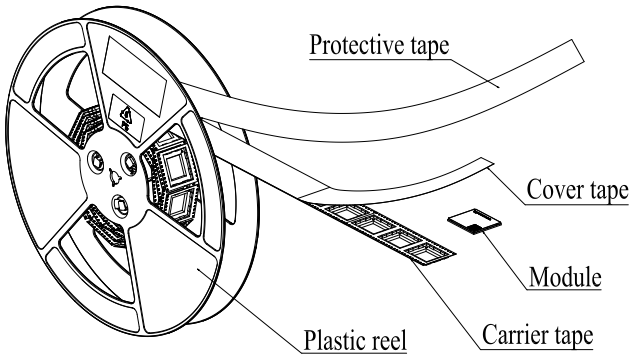

Place the modules into the carrier tape and use the cover tape to cover them; then wind the heat-sealed carrier tape on the plastic reel and use the protective tape for protection. 1 plastic reel can load 250 modules.

Place the packaged plastic reel, 1 humidity indicator card and 1 desiccant bag into a vacuum bag, then vacuumize it.

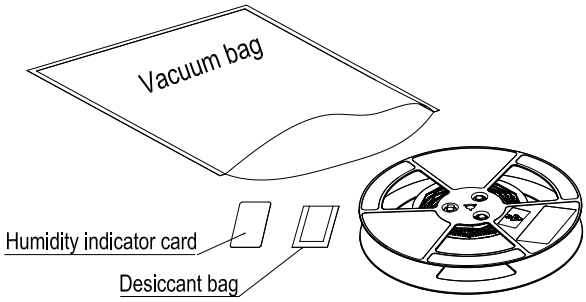

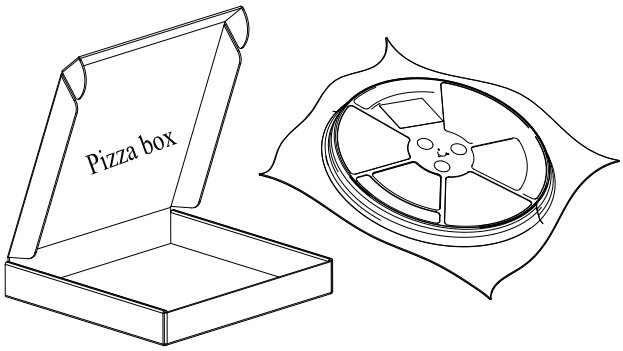

Place the vacuum-packed plastic reel inside the pizza box.

Place 4 packaged pizza boxes inside 1 carton box and seal it. 1 carton box can pack 1000 modules.

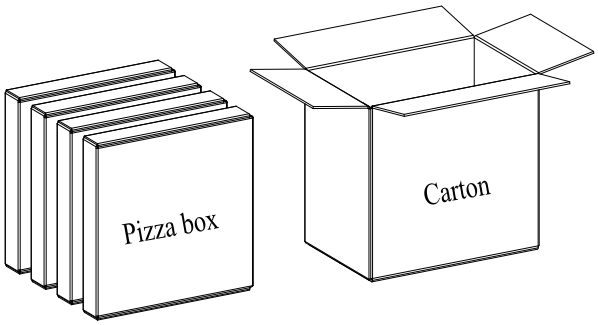

Figure 30: Packaging Process

9 Appendix References

Table 32: Reference Documents

Document Name
[1] Quectel_FCM360W_TE-B_User_Guide
[2] Quectel_RF_Layout_Application_Note
[3] Quectel_Module_SMT_Application_Note

Table 33: Terms and Abbreviations

Abbreviation	Description
ADC	Analog-to-Digital Converter
AP	Access Point
BLE	Bluetooth Low Energy
BPSK	Binary Phase Shift Keying
CCK	Complementary Code Keying
CDM	Charged Device Model
CS	Chip Select
DCE	Data Communications Equipment
DPSK	Differential Phase Shift Keying
DQPSK	Differential Quadrature Reference Phase Shift Keying
DTE	Data Terminal Equipment
DTIM	Delivery Traffic Indication Message
ESD	Electrostatic Discharge

EVM	Error Vector Magnitude
GFSK	Gauss frequency Shift Keying
GND	Ground
GPIO	General-Purpose Input/Output
HT	High Throughput
I/O	Input/Output
I2C	Inter-Integrated Circuit
I2S	Inter-IC Sound
IEEE	Institute of Electrical and Electronics Engineers
IoT	Internet of Things
LCC	Leadless Chip Carrier (package)
LNA	Low Noise Amplifier
Mbps	Million Bits Per Second
MISO	Master In Slave Out
MOSI	Master Out Slave In
OTA	Over-the-Air
PA	Power Amplifier
PCB	Printed Circuit Board
PMU	Power Management Unit
PWM	Pulse Width Modulation
QAM	Quadrature Amplitude Modulation
QPSK	Quadrature Phase Shift Keying
RF	Radio Frequency
RoHS	Restriction of Hazardous Substances
ROM	Read Only Memory
SCLK	Serial Clock
SDIO	Secure Digital Input/Output

SPI	Serial Peripheral Interface
SRAM	Static Random-Access Memory
STA	Station
TBD	To Be Determined
UART	Universal Asynchronous Receiver/Transmitter
USB	Universal Serial Bus
V_{IH}	High-level Input Voltage
V_{IL}	Low-level Input Voltage
Vmax	Maximum Voltage
Vmin	Minimum Voltage
Vnom	Normal Voltage Value
V_{OH}	High-level Output Voltage
V_{OL}	Low-level Output Voltage
VSWR	Voltage Standing Wave Ratio
Wi-Fi	Wireless Fidelity

10 Worning

10.1. Important Notice to OEM integrators

Product Marketing Name：Quectel FCM360K

1.This module is limited to OEM installation ONLY.
2.This module is limited to installation in fixed applications, according to Part 2.1091(b).
3.This module has been tested and found to comply with the limits for Part 15.247 & 15.407 of the FCC Rules.
4.The separate approval is required for all other operating configurations, including portable configurations with respect to Part 2.1093 and different antenna configurations 4. For FCC Part 15.31 (h) and (k): The host manufacturer is responsible for additional testing to verify compliance as a composite system. When testing the host device for compliance with Part 15 Subpart B, the host manufacturer is required to show compliance with Part 15 Subpart B while the transmitter module(s) are installed and operating. The modules should be transmitting and the evaluation should confirm that the module's intentional emissions are compliant (i.e. fundamental and out of band emissions). The host manufacturer must verify that there are no additional unintentional emissions other than what is permitted in Part 15 Subpart B or emissions are complaint with the transmitter(s) rule(s). The Grantee will provide guidance to the host manufacturer for Part 15 B requirements if needed.
Important Note Important Note notice that any deviation(s) from the defined parameters of the antenna trace, as described by the instructions, require that the host product manufacturer must notify to Quectel Wireless Solutions Co., Ltd.. that they wish to change the antenna trace design. In this case, a Class II permissive change application is required to be filed by the USI, or the host manufacturer can take responsibility through the change in FCC ID (new application) procedure followed by a Class II permissive change application. End Product LabelingWhen the module is installed in the host device, the FCC/IC ID label must be visible through a window on the final device or it must be visible when an access panel, door or cover is easily re-moved. If not, a second label must be placed on the outside of the final device that contains the following text: “Contains FCC ID: XMR2023FCM360K” The FCC ID can be used only when all FCC mpliance requirements are met.

Antenna Installation

(1)The antenna must be installed such that 20 cm is maintained between the antenna and users,
(2)The transmitter module may not be co-located with any other transmitter or antenna.
(3)Only antennas of the same type and with equal or less gains as shown below may be used with thismodule. Other types of antennas and/or higher gain antennas may require additional authorization for operation.
(4)The max allowed antenna gain is 1 dBi for external monopole antenna.
In the event that these conditions cannot be met (for example certain laptop configurations or co-location with another transmitter), then the FCC authorization is no longer considered valid and the FCC ID/IC ID cannot be used on the final product. In these circumstances, the OEM integrator will be responsible for re-evaluating the end product (including the transmitter) and obtaining a separate FCC/IC authorization. Manual Information to the End User
The OEM integrator has to be aware not to provide information to the end user regarding how to install or remove this RF module in the user's manual of the end product which integrates this module. The end user manual shall include all required regulatory information/warning as show in this manual.

10.2. FCC Statement

Federal Communication Commission Interference Statement

This device complies with Part 15 of the FCC Rules. Operation is subject to the following two conditions:
(1)This device may not cause harmful interference, and
(2) this device must accept any interference received, including interference that may cause undesired operation.
This equipment has been tested and found to comply with the limits for a Class B digital device, pursuant to Part 15 of the FCC Rules. These limits are designed to provide reasonable protection against harmful interference in a residential installation.
This equipment generates, uses and can radiate radio frequency energy and, if not installed and used in accordance with the instructions, may cause harmful interference to radio communications. However, there is no guarantee that interference will not occur in a particular installation. If this equipment does cause harmful interference to radio or television reception, which can be determined by turning the equipment off and on, the user is encouraged to try to correct the interference by one of the following measures:

-Reorient or relocate the receiving antenna.
-Increase the separation between the equipment and receiver.
-Connect the equipment into an outlet on a circuit different from that to which the receiver is connected.
-Consult the dealer or an experienced radio/TV technician for help.
Any changes or modifications not expressly approved by the party responsible for compliance could void the user's authority to operate this equipment. This transmitter must not be co-located or operating in conjunction with any other antenna or transmitter.
This device is intended only for OEM integrators under the following conditions:

(For module device use)

1)The antenna must be installed such that 20 cm is maintained between the antenna and users, and
2)The transmitter module may not be co-located with any other transmitter or antenna. As long as 2conditions above are met, further transmitter test will not be required. However, the OEM integrator is still responsible for testing their end-product for any additional compliance requirements required with this module installed.
Radiation Exposure Statement
This equipment complies with FCC radiation exposure limits set forth for an uncontrolled environment. This equipment should be installed and operated with minimum distance 20 cm between the radiator & your body.

10.3. IC Statement

IRSS-GEN
"This device complies with Industry Canada's licence-exempt RSSs. Operation is subject to the following two conditions: (1) This device may not cause interference; and (2) This device must accept any interference, including interference that may cause undesired operation of the device." or "Le présent appareil est conforme aux CNR d'Industrie Canada applicables aux appareils radio exempts de licence. L'exploitation est autorisée aux deux conditions suivantes :

1) l'appareil ne doit pas produire de brouillage; 2) l'utilisateur de l'appareil doit accepter tout brouillage radioélectrique subi, même si le brouillage est susceptible d'en compromettre le fonctionnement."
Déclaration sur l'exposition aux rayonnements RF
L'autre utilisé pour l'émetteur doit être installé pour fournir une distance de séparation d'au moins 20 cm de toutes les personnes et ne doit pas être colocalisé ou fonctionner conjointement avec une autre antenne ou un autre émetteur.

Radio frequency radiation exposure statement

The other one used for the transmitter must be installed at a distance of at least 20 cm from all personnel and must not be shared or operated together with any other antenna or transmitter.

The host product shall be properly labeled to identify the modules within the host product.

The Innovation, Science and Economic Development Canada certification label of a module shall be clearly visible at all times when installed in the host product; otherwise, the host product must be labeled to display the Innovation, Science and Economic Development Canada certification number for the module, preceded by the word “Contains” or similar wording expressing the same meaning, as follows:

“Contains IC: 10224A-2023FCM360K” or “where: 10224A-2023FCM360K is the module’s certification number”.

Le produit hôte doit être correctement étiqueté pour identifier les modules dans le produit hôte. L'étiquette de certification d'Innovation, Sciences et Développement économique Canada d'un module doit être clairement visible en tout temps lorsqu'il est installédans le produit hôte; sinon, le produit hôte doit porter une étiquette indiquant le numéro de certification d'Innovation, Sciences et Développement économique Canada pour le module, précédé du mot «Contient» ou d'un libellé semblable exprimant la même signification, comme suit:

"Contient IC: 10224A-2023FCM360K" ou "où: 10224A-2023FCM360K est le numéro de certification du module".

i.the device for operation in the band 5150–5250 MHz is only for indoor use to reduce the potential for harmful interference to co-channel mobile satellite systems;

ii.for devices with detachable antenna(s), the maximum antenna gain permitted for devices in the bands 5250-5350 MHz and 5470-5725 MHz shall be such that the equipment still complies with the e.i.r.p. limit;

iii.for devices with detachable antenna(s), the maximum antenna gain permitted for devices in the band 5725-5850 MHz shall be such that the equipment still complies with the e.i.r.p. limits as appropriate;

iv.Omnidirectional antenna is recommended