FLM263D Hardware Design

Wi-Fi&Bluetooth Module Series

Version: 1.0.0

Date: 2023-09-20

Status: Preliminary

At Quectel, our aim is to provide timely and comprehensive services to our customers. If you require any assistance, please contact our headquarters:

Quectel Wireless Solutions Co., Ltd.
Building 5, Shanghai Business Park Phase III (Area B), No.1016 Tianlin Road, Minhang District, Shanghai 200233, China
Tel: +86 21 5108 6236
Email: info@quectel.com

Or our local offices. For more information, please visit:
http://www.quectel.com/support/sales.htm.

For technical support, or to report documentation errors, please visit:
http://www.quectel.com/support/technical.htm.
Or email us at: support@quectel.com.

Legal Notices

We offer information as a service to you. The provided information is based on your requirements and we make every effort to ensure its quality. You agree that you are responsible for using independent analysis and evaluation in designing intended products, and we provide reference designs for illustrative purposes only. Before using any hardware, software or service guided by this document, please read this notice carefully. Even though we employ commercially reasonable efforts to provide the best possible experience, you hereby acknowledge and agree that this document and related services hereunder are provided to you on an “as available” basis. We may revise or restate this document from time to time at our sole discretion without any prior notice to you.

Copyright

Our and third-party products hereunder may contain copyrighted material. Such copyrighted material shall not be copied, reproduced, distributed, merged, published, translated, or modified without prior written consent. We and the third party have exclusive rights over copyrighted material. No license shall be granted or conveyed under any patents, copyrights, trademarks, or service mark rights. To avoid ambiguities, purchasing in any form cannot be deemed as granting a license other than the normal non-exclusive, royalty-free license to use the material. We reserve the right to take legal action for noncompliance with abovementioned requirements, unauthorized use, or other illegal or malicious use of the material.

Trademarks

Except as otherwise set forth herein, nothing in this document shall be construed as conferring any rights to use any trademark, trade name or name, abbreviation, or counterfeit product thereof owned by Quectel or any third party in advertising, publicity, or other aspects.

Third-Party Rights

This document may refer to hardware, software and/or documentation owned by one or more third parties ("third-party materials"). Use of such third-party materials shall be governed by all restrictions and obligations applicable thereto.

We make no warranty or representation, either express or implied, regarding the third-party materials, including but not limited to any implied or statutory, warranties of merchantability or fitness for a particular purpose, quiet enjoyment, system integration, information accuracy, and non-infringement of any third-party intellectual property rights with regard to the licensed technology or use thereof. Nothing herein constitutes a representation or warranty by us to either develop, enhance, modify, distribute, market, sell, offer for sale, or otherwise maintain production of any our products or any other hardware, software, device, tool, information, or product. We moreover disclaim any and all warranties arising from the course of dealing or usage of trade.

Privacy Policy

To implement module functionality, certain device data are uploaded to Quectel's or third-party's servers, including carriers, chipset suppliers or customer-designated servers. Quectel, strictly abiding by the relevant laws and regulations, shall retain, use, disclose or otherwise process relevant data for the purpose of performing the service only or as permitted by applicable laws. Before data interaction with third parties, please be informed of their privacy and data security policy.

Disclaimer

a) We acknowledge no liability for any injury or damage arising from the reliance upon the information.
b) We shall bear no liability resulting from any inaccuracies or omissions, or from the use of the information contained herein.
c) While we have made every effort to ensure that the functions and features under development are free from errors, it is possible that they could contain errors, inaccuracies, and omissions. Unless otherwise provided by valid agreement, we make no warranties of any kind, either implied or express, and exclude all liability for any loss or damage suffered in connection with the use of features and functions under development, to the maximum extent permitted by law, regardless of whether such loss or damage may have been foreseeable.
d) We are not responsible for the accessibility, safety, accuracy, availability, legality, or completeness of information, advertising, commercial offers, products, services, and materials on third-party websites and third-party resources.

Copyright © Quectel Wireless Solutions Co., Ltd. 2023. All rights reserved.

Safety Information

The following safety precautions must be observed during all phases of operation, such as usage, service or repair of any terminal or mobile incorporating the module. Manufacturers of the terminal should notify users and operating personnel of the following safety information by incorporating these guidelines into all manuals of the product. Otherwise, Quectel assumes no liability for customers' failure to comply with these precautions.

	Full attention must be paid to driving at all times to reduce the risk of an accident. Using a mobile phone while driving (even with a handsfree kit) causes distraction and can lead to an accident. Please comply with laws and regulations restricting the use of wireless devices while driving.
	Switch off the terminal or mobile before boarding an aircraft. The operation of wireless appliances in an aircraft is forbidden to prevent interference with communication systems. If there is an Airplane Mode, it should be enabled prior to boarding an aircraft. Please consult the airline staff for more restrictions on the use of wireless devices on an aircraft.
	Wireless devices may cause interference on sensitive medical equipment, so please be aware of the restrictions on the use of wireless devices when in hospitals, clinics or other healthcare facilities.
	Terminals or mobiles operating over radio signal and cellular network cannot be guaranteed to connect in certain conditions, such as when the mobile bill is unpaid or the (U)SIM card is invalid. When emergency help is needed in such conditions, use emergency call if the device supports it. In order to make or receive a call, the terminal or mobile must be switched on in a service area with adequate cellular signal strength. In an emergency, the device with emergency call function cannot be used as the only contact method considering network connection cannot be guaranteed under all circumstances.
	The terminal or mobile contains a transceiver. When it is ON, it receives and transmits radio frequency signals. RF interference can occur if it is used close to TV sets, radios, computers or other electric equipment.
	In locations with explosive or potentially explosive atmospheres, obey all posted signs and turn off wireless devices such as mobile phones or other terminals. Areas with explosive or potentially explosive atmospheres include fueling areas, below decks on boats, fuel or chemical transfer or storage facilities, and areas where the air contains chemicals or particles such as grain, dust or metal powders.

About the Document

Revision History

Version	Date	Author	Description
-	2023-09-20	Devin YU/Neil CHENG	Creation of the document
1.0.0	2023-09-20	Devin YU/Neil CHENG	Preliminary

Contents

Safety Information **3**

About the Document **4**

Contents **5**

Table Index **7**

Figure Index **8**

1 Introduction **9**
1.1. Special Mark 9

2 Product Overview **10**
2.1. Key Features 11

3 Application Interfaces **12**
3.1. Pin/Test Point Assignment 12
3.2. Pin/Test Point Description 13
3.3. GPIO Multiplexing 15
3.4. Application Interfaces 16
3.4.1. PWM Interfaces* 16
3.4.2. ADC Interfaces* 16
3.5. Test Point 17
3.5.1. UARTs 17
3.5.2. CHIP_EN 17

4 Operating Characteristics **18**
4.1. Power Supply 18
4.1.1. Reference Design for Power Supply 18
4.2. Turn On 19
4.3. Reset 19
4.4. Download Mode 20

5 RF Performances **21**
5.1. Wi-Fi Performances 21
5.2. Bluetooth Performances 22
5.3. Antenna/Antenna Interface 22
5.3.1. PCB Antenna 23
5.3.2. RF Coaxial Connector 24
5.3.2.1. Receptacle Specifications 24
5.3.2.2. Antenna Connector Installation 25
5.3.2.3. Assemble Coaxial Cable Plug Manually 27
5.3.2.4. Assemble Coaxial Cable Plug with Jig 28
5.3.2.5. Recommended Mated Plug and Cable Manufacturer 28

6 Electrical Characteristics & Reliability 29
6.1. Absolute Maximum Ratings 29
6.2. Power Supply Ratings 29
6.3. Wi-Fi Power Consumption 30
6.4. Digital I/O Characteristics 30
6.5. ESD Protection 31

7 Mechanical Information 32
7.1. Mechanical Dimensions 32
7.2. Recommended Footprint 34
7.3. Top and Bottom Views 35

8 Storage, Manufacturing & Packaging 36
8.1. Storage Conditions 36
8.2. Manufacturing and Soldering 37
8.3. Packaging Specifications 39
8.3.1. Carrier Tape 39
8.3.2. Plastic Reel 40
8.3.3. Mounting Direction 40
8.3.4. Packaging Process 41

9 Appendix References 42

Table Index

Table 1 : Special Mark 9
Table 2 : Basic Information 10
Table 3 : Key Features 11
Table 4 : Parameter Description 13
Table 5 : Pin Description 14
Table 6 : Test Point Description 14
Table 7 : GPIO Multiplexing 15
Table 8 : Pin Definition of PWM Interfaces 16
Table 9 : Pin Definition of ADC Interfaces 16
Table 10 : ADC Features 16
Table 11 : Test Point Definition of UARTs 17
Table 12 : Pin Definition of Power Supply and GND Pins 18
Table 13 : Test Point Definition of CHIP_EN 19
Table 14 : Test Point Definition of CHIP_EN 19
Table 15 : Wi-Fi Performances 21
Table 16 : Bluetooth Performances 22
Table 17 : PCB Antenna Specifications 23
Table 18 : Major Specifications of the RF Connector (Receptacle) 25
Table 19 : Absolute Maximum Ratings (Unit: V) 29
Table 20 : Module Power Supply Ratings (Unit: V) 29
Table 21 : Power Consumption in RF Non-signaling Mode (Unit: mA) 30
Table 22 : VBAT I/O Characteristics (Unit: V) 30
Table 23 : ESD Characteristics (Unit: kV) 31
Table 24 : Recommended Thermal Profile Parameters 38
Table 25 : Carrier Tape Dimension Table (Unit: mm) 39
Table 26 : Plastic Reel Dimension Table (Unit: mm) 40
Table 27 : Reference Documents 42
Table 28 : Terms and Abbreviations 42

Figure Index

Figure 2 : Pin Assignment (Top View) 12
Figure 3 : Test Point Assignment (Top View) 13
Figure 4 : VBAT Reference Circuit 18
Figure 5 : Turn-on Timing 19
Figure 6 : Reset Timing 20
Figure 7 : Keep-out Area on Motherboard 23
Figure 8 : Prohibited Area for Routing 24
Figure 9 : Dimensions of the Receptacle (Unit: mm) 24
Figure 10 : Dimensions of Mated Plugs (Ø 0.81 Coaxial Cables) (Unit: mm) 25
Figure 11 : Space Factor of Mated Connectors (Ø 0.81 mm Coaxial Cables) (Unit: mm) 26
Figure 12 : Space Factor of Mated Connectors (Ø 1.13 mm Coaxial Cables) (Unit: mm) 26
Figure 13 : Plug in a Coaxial Cable Plug 27
Figure 14 : Pull out a Coaxial Cable Plug 27
Figure 15 : Install the Coaxial Cable Plug with Jig 28
Figure 16 : Top and Side Dimensions 32
Figure 17 : Bottom Dimensions (Bottom View) 33
Figure 18 : Recommended Footprint 34
Figure 19 : Top and Bottom Views (PCB Antenna) 35
Figure 20 : Top and Bottom Views (RF Coaxial Connector) 35
Figure 21 : Recommended Reflow Soldering Thermal Profile 37
Figure 22 : Carrier Tape Dimension Drawing 39
Figure 23 : Plastic Reel Dimension Drawing 40
Figure 24 : Mounting Direction 40
Figure 25 : Packaging Process 41

1 Introduction

QuecOpen® is a solution where the module acts as the main processor. Constant transition and evolution of both the communication technology and the market highlight its merits. It can help you to:

- Realize embedded applications' quick development and shorten product R&D cycle
- Simplify circuit and hardware structure design to reduce engineering costs
- Miniaturize products
- Reduce product power consumption
- Apply OTA technology
- Enhance product competitiveness and price-performance ratio

This document defines FLM263D in QuecOpen® solution and describes its air interfaces and hardware interfaces, which are connected with your applications. The document provides a quickly insight into interface specifications, RF performance, electrical and mechanical details, as well as other related information of the module.

1.1. Special Mark

Table 1: Special Mark

Mark	Definition
*	Unless otherwise specified, when an asterisk (*) is used after a function, feature, interface, pin name, AT command, argument, and so on, it indicates that the function, feature, interface, pin, AT command, argument and so on is under development and currently not supported; and the asterisk (*) after a model indicates that the sample of the model is currently unavailable.

2 Product Overview

FLM263D is a high-performance MCU Wi-Fi 6 and Bluetooth module supporting IEEE 802.11b/g/n/ax and BLE 5.2 standards. The module provides PWM* and multiple ADC* interfaces for various applications.

FLM263D supports either SMT or wave-soldering technology with compact packaging. The general features of the module are as follow:

- 320 MHz and 32-bit MCU processor
- 512 KB SRAM and a built-in 4 MB Flash
- Support secondary development

Table 2: Basic Information

FLM263D	
Packaging type	DIP
Pin counts	7
Dimensions	(17.3 ±0.2) mm × (15.0 ±0.2) mm × (2.8 ±0.2) mm
Weight	Approx. 0.8 g

2.1. Key Features

Table 3: Key Features

Basic Information	
Protocols and Standards	● Wi-Fi Protocols: IEEE 802.11b/g/n/ax ● Bluetooth protocol: BLE 5.2 ● All hardware components are fully compliant with EU RoHS directive
Power Supply	**VBAT Power Supply:** ● 3.0–3.6 V ● Typ.: 3.3 V
Temperature Ranges	Operating temperature [1]: -40 to +105 °C Storage temperature: -45 to +115 °C
EVB Kit	FLM263D-TE-B [2]
Antenna/Antenna Interface	
Antenna/ Antenna Interface [3]	● PCB antenna ● RF coaxial connector ● 50 Ω characteristic impedance
Application Interface [4]	
Application Interfaces	PWM*, ADC*, GPIO

[1] Within the operating temperature range, the module's related performance meets IEEE and Bluetooth specifications.
[2] For more details about the EVB, see ***document [1]***.
[3] The module is provided with one of the two antenna/antenna interface designs. For more details, please contact Quectel Technical Support.
[4] For more details about the interfaces, see ***Chapter 3.3*** and ***Chapter 3.4***.

3 Application Interfaces

3.1. Pin/Test Point Assignment

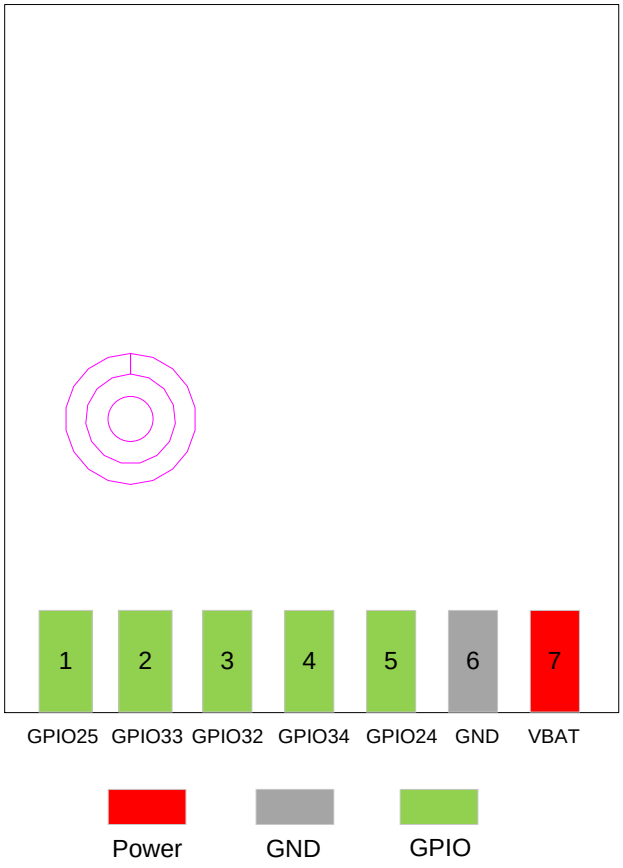

Figure 1: Pin Assignment (Top View)

NOTE

1. The module provides 5 GPIO interfaces by default. In the case of multiplexing, it supports PWM* and ADC* interfaces. For more details, see ***Chapter 3.3*** and ***Chapter 3.4***.
2. The GND pin should be connected to ground.

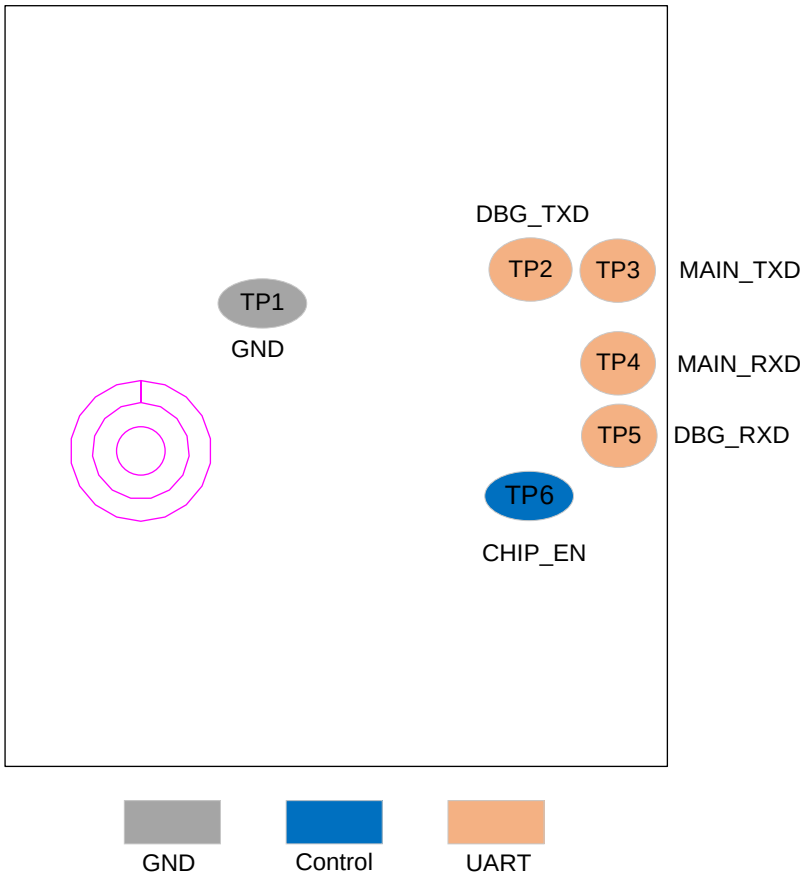

Figure 2: Test Point Assignment (Top View)

3.2. Pin/Test Point Description

Table 4: Parameter Description

Parameter	Description
DI	Digital Input
DO	Digital Output
DIO	Digital Input/Output
PI	Power Input

DC characteristics include power domain and rated current.

Table 5: Pin Description

Power Supply					
Pin Name	**Pin No.**	**I/O**	**Description**	**DC Characteristics**	**Comment**
VBAT	7	PI	Power supply for the module	Vmax = 3.6 V Vmin = 3.0 V Vnom = 3.3 V	It must be provided with sufficient current of at least 0.3 A.
GND	6				
GPIO Interfaces					
Pin Name	**Pin No.**	**I/O**	**Description**	**DC Characteristics**	**Comment**
GPIO25	1	DIO	General-purpose input/output	VBAT	Interrupt wakeup.
GPIO33	2	DIO			
GPIO32	3	DIO			
GPIO34	4	DIO			
GPIO24	5	DIO			

Table 6: Test Point Description

Control Signal				
Test Point Name	**Function**	**I/O**	**Description**	**Comment**
TP6	CHIP_EN	DI	Enable the module (default)	Hardware enable. Internally pulled up to VBAT. Active high.
			Reset the module	Hardware reset. Internally pulled up to VBAT. Active low.
UARTs				
Test Point Name	**Function**	**I/O**	**Description**	**Comment**
TP3	MAIN_TXD	DO	Main UART transmit	
TP4	MAIN_RXD	DI	Main UART receive	

TP2	DBG_TXD	DO	Debug UART transmit	Pull it down to GND with a 4.7 kΩ resistor for RF non-signaling test.
TP5	DBG_RXD	DI	Debug UART receive	
Other Signals				
Test Point Name	**Function**			
TP1	GND			

NOTE

The power domain of TP2–TP6 is VBAT.

3.3. GPIO Multiplexing

The module provides 5 GPIO interfaces by default. Pins are defined as follows:

Table 7: GPIO Multiplexing

Pin Name	Pin No.	Multiplexing Function 0 (GPIO No.)	Multiplexing Function 1	Multiplexing Function 2	Multiplexing Function 3
GPIO25	1	GPIO25	PWM5	ADC1	IRDA
GPIO33	2	GPIO33	PWM7	TS7	-
GPIO32	3	GPIO32	PWM6	TS6	-
GPIO34	4	GPIO34	PWM8	TS8	-
GPIO24	5	GPIO24	PWM4	32K_CLK_OUT	ADC2

NOTE

All GPIOs can be configured as interrupt source to interrupt the system in normal working mode or to wake it up from low power mode. For details, please contact Quectel Technical Support.

3.4. Application Interfaces

3.4.1. PWM Interfaces*

In the case of multiplexing, the module supports maximum 5 PWM interfaces. Pin description of PWM interfaces are as follows.

Table 8: Pin Definition of PWM Interfaces

Pin Name	Pin No.	Multiplexing Function	I/O	Description
GPIO25	1	PWM5	DO	PWM5 out
GPIO33	2	PWM7	DO	PWM7 out
GPIO32	3	PWM6	DO	PWM6 out
GPIO34	4	PWM8	DO	PWM8 out
GPIO24	5	PWM4	DO	PWM4 out

3.4.2. ADC Interfaces*

In the case of multiplexing, the module supports maximum 2 ADC interfaces, and the voltage range is 0–2.4 V. To improve ADC accuracy, surround ADC trace with ground.

Table 9: Pin Definition of ADC Interfaces

Pin Name	Pin No.	Multiplexing Function	I/O	Description
GPIO25	1	ADC1	AI	General-purpose ADC interface
GPIO24	5	ADC2	AI	General-purpose ADC interface

Table 10: ADC Features

Parameter	Min.	Typ.	Max.	Unit
ADC Voltage Range	0	-	2.4	V
ADC Resolution Rate	-	13	-	bit

3.5. Test Point

3.5.1. UARTs

The module supports two UARTs by default: the main UART and the debug UART.

Table 11: Test Point Definition of UARTs

Test Point Name	Function	I/O	Description	Comment
TP3	MAIN_TXD	DO	Main UART transmit	
TP4	MAIN_RXD	DI	Main UART receive	
TP2	DBG_TXD	DO	Debug UART transmit	Pull down to GND with a 4.7 kΩ resistor for RF non-signaling test.
TP5	DBG_RXD	DI	Debug UART receive	

The main UART can be used for data transmission. It sends and receives instruction data during downloading and debugging. The default baud rate is 115200 bps, and the maximum baud rate can reach 6 Mbps. The main UART is also available for firmware upgrading and supports a default baud rate of 921600 bps.

The debug UART supports 115200 bps baud rate by default, and is used for outputting partial logs with debugging tools. The module enters RF non-signaling mode when DBG_TXD is pulled down to GND with a 4.7 kΩ resistor.

3.5.2. CHIP_EN

CHIP_EN can be used to enable or reset the module. When CHIP_EN is at high level, it can realize the automatic startup of the module, while at low level, it can reset the module. For more details, see ***Chapters 4.2–4.4***.

4 Operating Characteristics

4.1. Power Supply

Power supply pin and ground pins of the module are defined in the following table.

Table 12: Pin Definition of Power Supply and GND Pins

Pin Name	Pin No.	I/O	Description	Min.	Typ.	Max.	Unit
VBAT	7	PI	Power supply for the module	3.0	3.3	3.6	V
GND	6						

4.1.1. Reference Design for Power Supply

The module is powered by VBAT, and it is recommended to use a power supply chip that can provide sufficient current of at least 0.3 A. For better power supply performance, it is recommended to parallel a 22 μF decoupling capacitor, and two filter capacitors (1 μF and 100 nF) near the module's VBAT pin. C4 is reserved for debugging and not mounted by default. In addition, it is recommended to add a TVS near the VBAT to improve the surge voltage bearing capacity of the module. In principle, the longer the VBAT trace is, the wider it should be.

VBAT reference circuit is shown below:

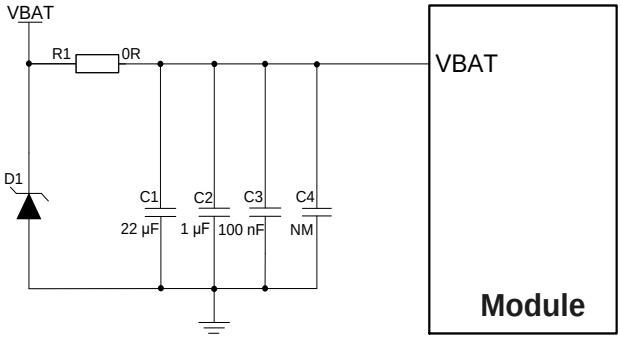

Figure 3: VBAT Reference Circuit

4.2. Turn On

After the module VBAT is powered up, keep the CHIP_EN at high level more than 5 ms to realize the automatic startup of the module.

Table 13: Test Point Definition of CHIP_EN

Test Point Name	Function	I/O	Description	Comment
TP6	CHIP_EN	DI	Enable the module	Hardware enable. Internally pulled up to VBAT. Active high.

The turn-on timing is shown below:

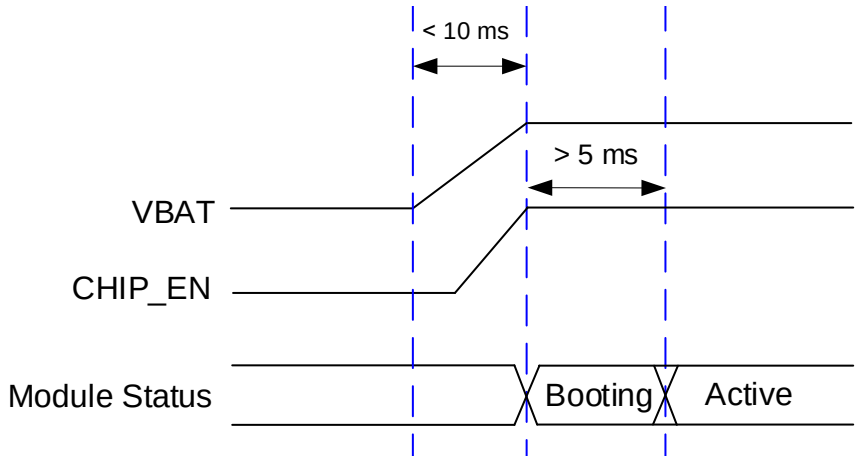

Figure 4: Turn-on Timing

4.3. Reset

Drive CHIP_EN low for at least 100 ms and then release it to reset the module.

Table 14: Test Point Definition of CHIP_EN

Test Point Name	Function	I/O	Description	Comment
TP6	CHIP_EN	DI	Reset the module	Hardware reset. Internally pulled up to VBAT. Active low.

The module reset timing is illustrated in the following figure.

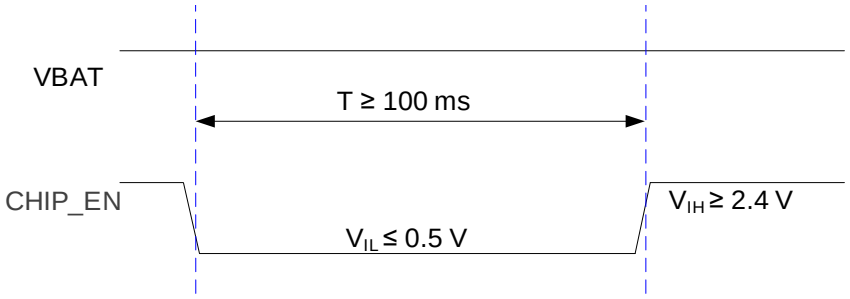

Figure 5: Reset Timing

4.4. Download Mode

Keep CHIP_EN at low level during resetting or power-up and the module will enter download mode. In the download mode, the firmware can be download through the main UART. Reset the module to exit the download mode when the downloading is complete.

5 RF Performances

5.1. Wi-Fi Performances

Table 15: Wi-Fi Performances

Operating Frequency
2.4 GHz: 2.400–2.4835 GHz
Modulation
BPSK, QPSK, CCK, 16QAM, 64QAM
Operating Mode
● AP ● STA
Encryption Mode
WPA-PSK, WPA2-PSK, WPA3-SAE
Transmission Data Rate
● 802.11b: 1 Mbps, 2 Mbps, 5.5 Mbps, 11 Mbps ● 802.11g: 6 Mbps, 9 Mbps, 12 Mbps, 18 Mbps, 24 Mbps, 36 Mbps, 48 Mbps, 54 Mbps ● 802.11n: HT20 (MCS 0–MCS 7) ● 802.11ax: HE20 (MCS 0–MCS 7)

Condition (VBAT = 3.3 V; Temp.: 25 °C)		**EVM**	**Typ.; Unit: dBm; Tolerance: ±2 dB**	
			Transmitting Power	**Receiver Sensitivity**
2.4 GHz	802.11b @ 1 Mbps	≤ 35 %	18	-97
	802.11b @ 11 Mbps		18	-87
	802.11g @ 6 Mbps	≤ -5 dB	15	-90
	802.11g @ 54 Mbps	≤ -25 dB	14	-74

	802.11n, HT20 @ MCS 0	≤ -5 dB	14	-90
	802.11n, HT20 @ MCS 7	≤ -27 dB	13	-72
	802.11ax, HE20 @ MCS 0	≤ -5 dB	14	-90
	802.11ax, HE20 @ MCS 7	≤ -27 dB	13	-71

5.2. Bluetooth Performances

Table 16: Bluetooth Performances

Operating Frequency		
2.400–2.4835 GHz		
Modulation		
GFSK		
Operating Mode		
BLE		
Condition (VBAT = 3.3 V; Temp.: 25 °C)	**Typ.; Unit: dBm; Tolerance: ±2 dB**	
	Transmitting Power	**Receiver Sensitivity**
BLE (1 Mbps)	10	-95

5.3. Antenna/Antenna Interface

The module is provided with one of the two antenna/antenna interface designs: PCB antenna or RF coaxial connector. The RF coaxial connector is not available when the module is designed with a PCB antenna.

Appropriate antenna type and design should be used with matched antenna parameters according to specific application. It is required to perform a comprehensive functional test for the RF design before mass production of terminal products. The entire content of this chapter is provided for illustration only. Analysis, evaluation and determination are still necessary when designing target products.

5.3.1. PCB Antenna [5]

Table 17: PCB Antenna Specifications

Parameter	Requirement
Frequency Range (GHz)	2.400–2.500
Input Impedance (Ω)	50
VSWR	≤ 3
Gain (dBi)	TBD (Max.)
Efficiency	TBD

When designed with PCB antenna, the module should be placed on the edge of the motherboard. The PCB antenna should be at least 16 mm away from the metal components, connectors, vias, traces, and copper pour area on the motherboard. On the motherboard, all PCB layers under the PCB antenna should be designed as a keep-out area.

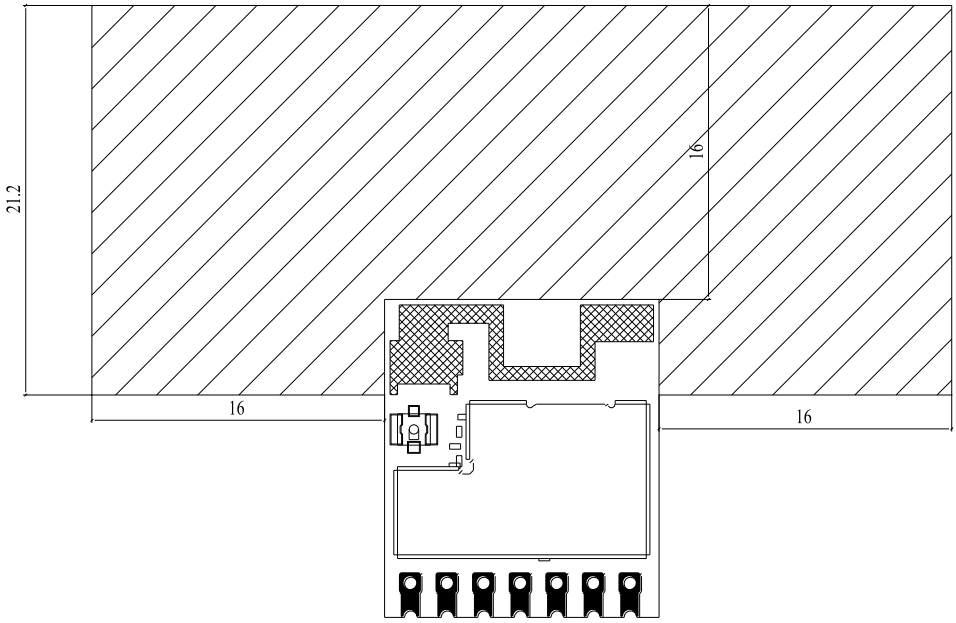

Figure 6: Keep-out Area on Motherboard

During PCB design, do not route traces across the RF test point at the bottom of the module to ensure the module performance.

[5] The module is provided with one of the two antenna/antenna interface designs. For more details, please contact Quectel Technical Support.

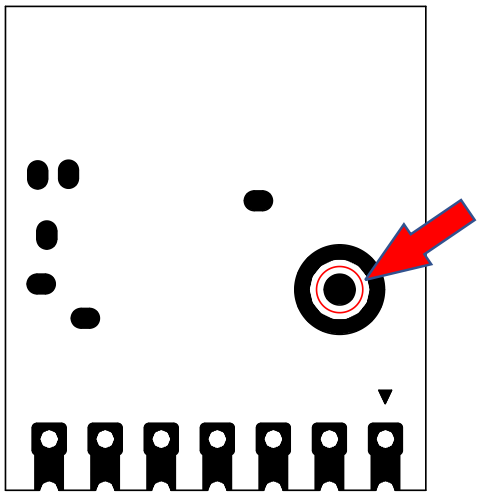

Figure 7: Prohibited Area for Routing

5.3.2. RF Coaxial Connector [6]

5.3.2.1. Receptacle Specifications

The mechanical dimensions of the receptacle mounted on the module are as follows.

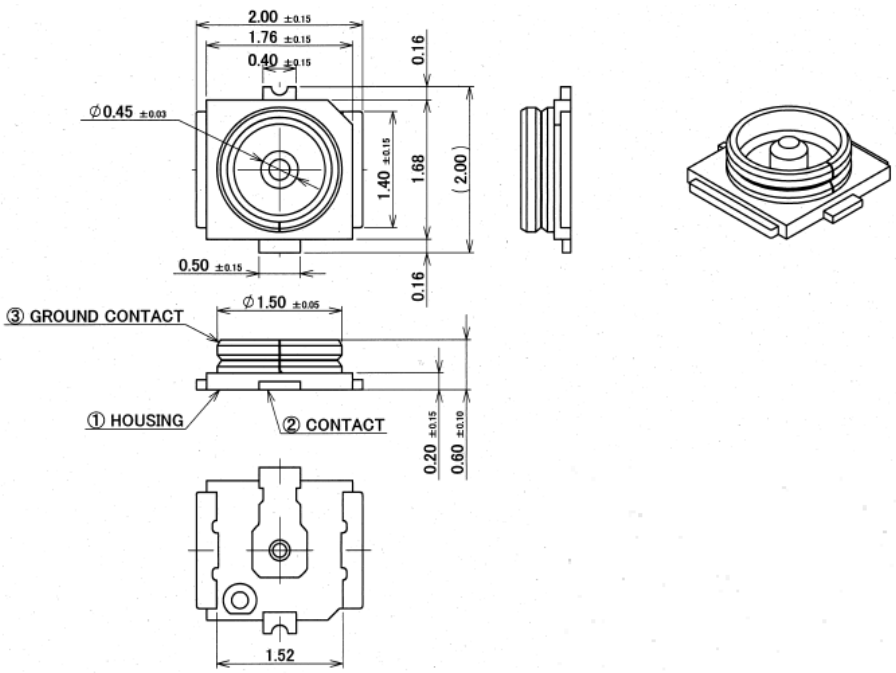

Figure 8: Dimensions of the Receptacle (Unit: mm)

[6] The module is provided with one of the two antenna/antenna interface designs. For more details, please contact Quectel Technical Support.

Table 18: Major Specifications of the RF Connector (Receptacle)

Item	Specification
Nominal Frequency Range	DC to 6 GHz
Nominal Impedance	50 Ω
Temperature Rating	-40 °C to +105 °C
Voltage Standing Wave Ratio (VSWR)	Meet the requirements of: Max. 1.3 (DC–3 GHz) Max. 1.45 (3–6 GHz)

5.3.2.2. Antenna Connector Installation

The receptacle mounted on the module accepts two types of mated plugs that will meet a maximum height of 1.2 mm using a Ø 0.81 mm coaxial cable or a maximum height of 1.45 mm utilizing a Ø 1.13 mm coaxial cable.

The following figure shows the dimensions of mated plugs using Ø 0.81 mm coaxial cables.

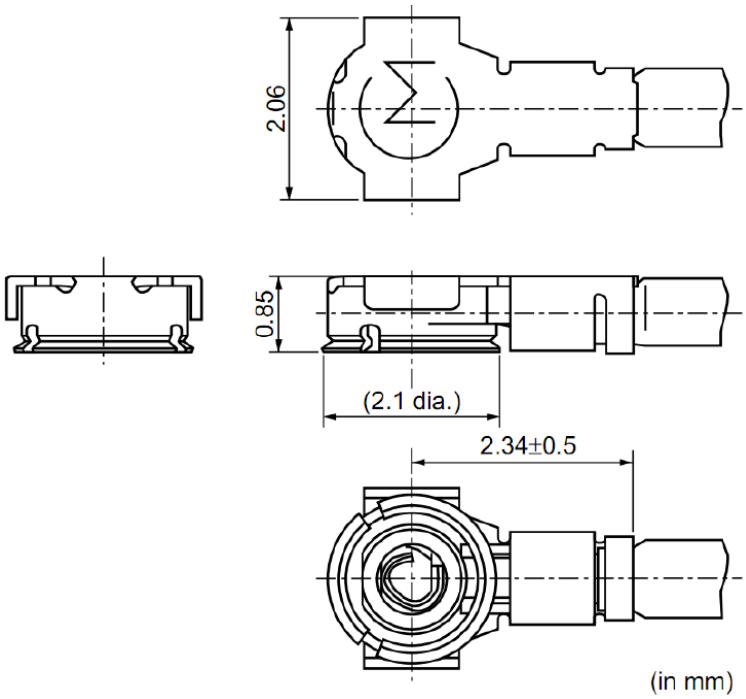

Figure 9: Dimensions of Mated Plugs (Ø 0.81 Coaxial Cables) (Unit: mm)

The following figure illustrates the connection between the receptacle on the module and the mated plug using a Ø 0.81 mm coaxial cable.

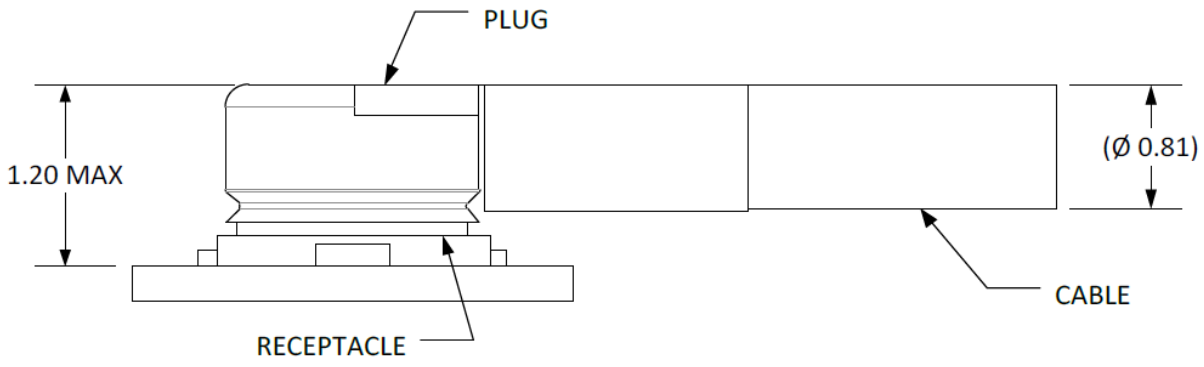

Figure 10: Space Factor of Mated Connectors (Ø 0.81 mm Coaxial Cables) (Unit: mm)

The following figure illustrates the connection between the receptacle mounted on the module and the mated plug using a Ø 1.13 mm coaxial cable.

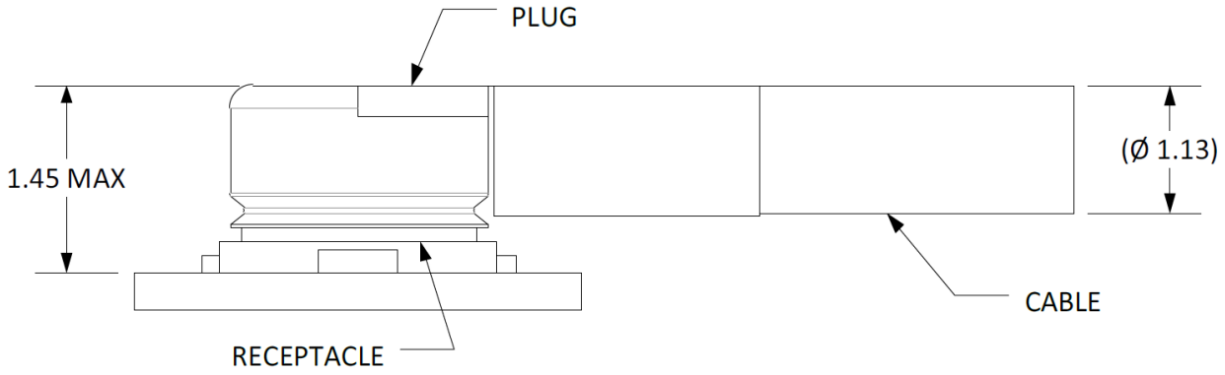

Figure 11: Space Factor of Mated Connectors (Ø 1.13 mm Coaxial Cables) (Unit: mm)

5.3.2.3. Assemble Coaxial Cable Plug Manually

The pictures for plugging in a coaxial cable plug is shown below, θ = 90° is acceptable, while θ ≠ 90° is not.

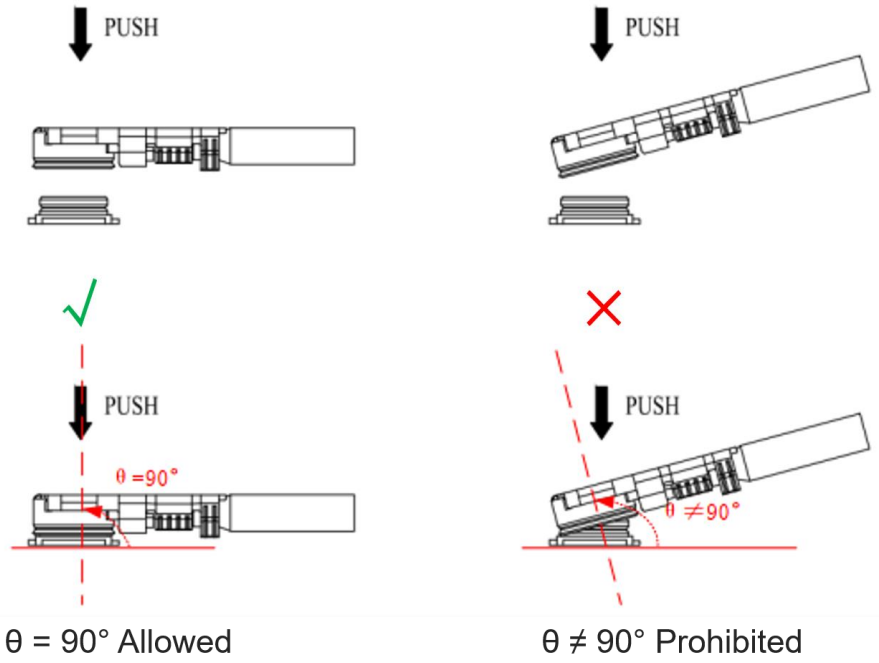

Figure 12: Plug in a Coaxial Cable Plug

The pictures of pulling out the coaxial cable plug is shown below, θ = 90° is acceptable, while θ ≠ 90° is not.

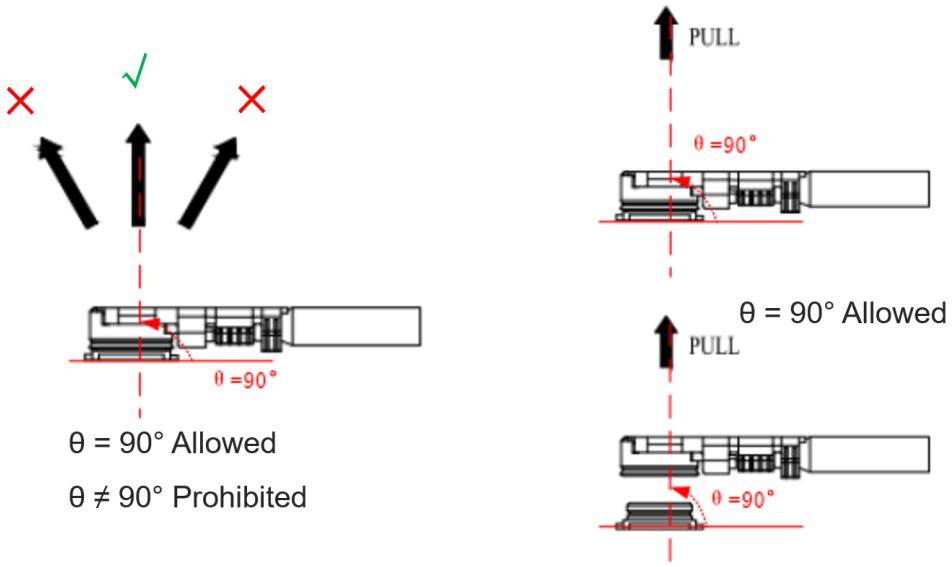

Figure 13: Pull out a Coaxial Cable Plug

5.3.2.4. Assemble Coaxial Cable Plug with Jig

The pictures of installing the coaxial cable plug with a jig is shown below, θ = 90° is acceptable, while θ ≠ 90° is not.

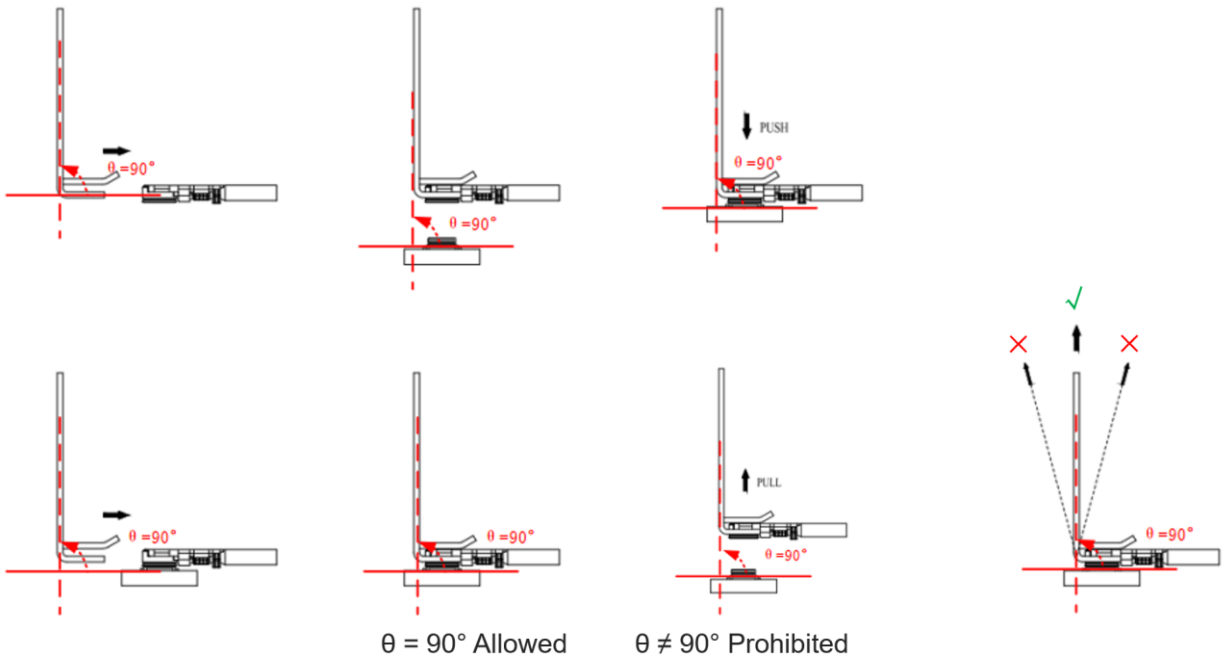

Figure 14: Install the Coaxial Cable Plug with Jig

5.3.2.5. Recommended Mated Plug and Cable Manufacturer

Mated plugs and cables by I-PEX are recommended. For more details, visit https://www.i-pex.com.

6 Electrical Characteristics & Reliability

6.1. Absolute Maximum Ratings

Table 19: Absolute Maximum Ratings (Unit: V)

Parameter	Min.	Max.
VBAT	-0.3	3.9
Voltage at Digital Pins	-0.3	3.9
Voltage at ADC1	0	2.4
Voltage at ADC2	0	2.4

6.2. Power Supply Ratings

Table 20: Module Power Supply Ratings (Unit: V)

Parameter	Description	Condition	Min.	Typ.	Max.
VBAT	Power supply for the module	The actual input voltages must be kept between the minimum and maximum values.	3.0	3.3	3.6

6.3. Wi-Fi Power Consumption

Table 21: Power Consumption in RF Non-signaling Mode (Unit: mA)

Condition (VBAT = 3.3 V; Temp.: 25 °C; Duty Cycle: 99 %)			I_{VBAT} (Typ.)
2.4 GHz	802.11b	Tx 1 Mbps @ TBD dBm	TBD
		Tx 11 Mbps @ TBD dBm	TBD
	802.11g	Tx 6 Mbps @ TBD dBm	TBD
		Tx 54 Mbps @ TBD dBm	TBD
	802.11n	Tx HT20 MCS 0 @ TBD dBm	TBD
		Tx HT20 MCS 7 @ TBD dBm	TBD
	802.11ax	Tx HE20 MCS 0 @ TBD dBm	TBD
		Tx HE20 MCS 7 @ TBD dBm	TBD

6.4. Digital I/O Characteristics

Table 22: VBAT I/O Characteristics (Unit: V)

Parameter	Description	Min.	Max.
V_{IH}	High-level input voltage	0.7 × VBAT	VBAT + 0.2
V_{IL}	Low-level input voltage	-0.3	0.3 × VBAT
V_{OH}	High-level output voltage	0.9 × VBAT	VBAT
V_{OL}	Low-level output voltage	0	0.1 × VBAT

6.5. ESD Protection

Static electricity occurs naturally and may damage the module. Therefore, applying proper ESD countermeasures and handling methods is imperative. For example, wear anti-static gloves during the development, production, assembly and testing of the module; add ESD protection components to the ESD sensitive interfaces and points in the product design.

Table 23: ESD Characteristics (Unit: kV)

Model	Test Result	Standard
Human Body Model (HBM)	±3 (Antenna interface) ±4 (Other interfaces)	*ANSI/ESDA/JEDEC JS-001-2017*
Charged Device Model (CDM)	±1	*ANSI/ESDA/JEDEC JS-002-2018*

7 Mechanical Information

This chapter describes the mechanical dimensions of the module. All dimensions are measured in millimeters (mm), and the dimensional tolerances are ±0.2 mm unless otherwise specified.

7.1. Mechanical Dimensions

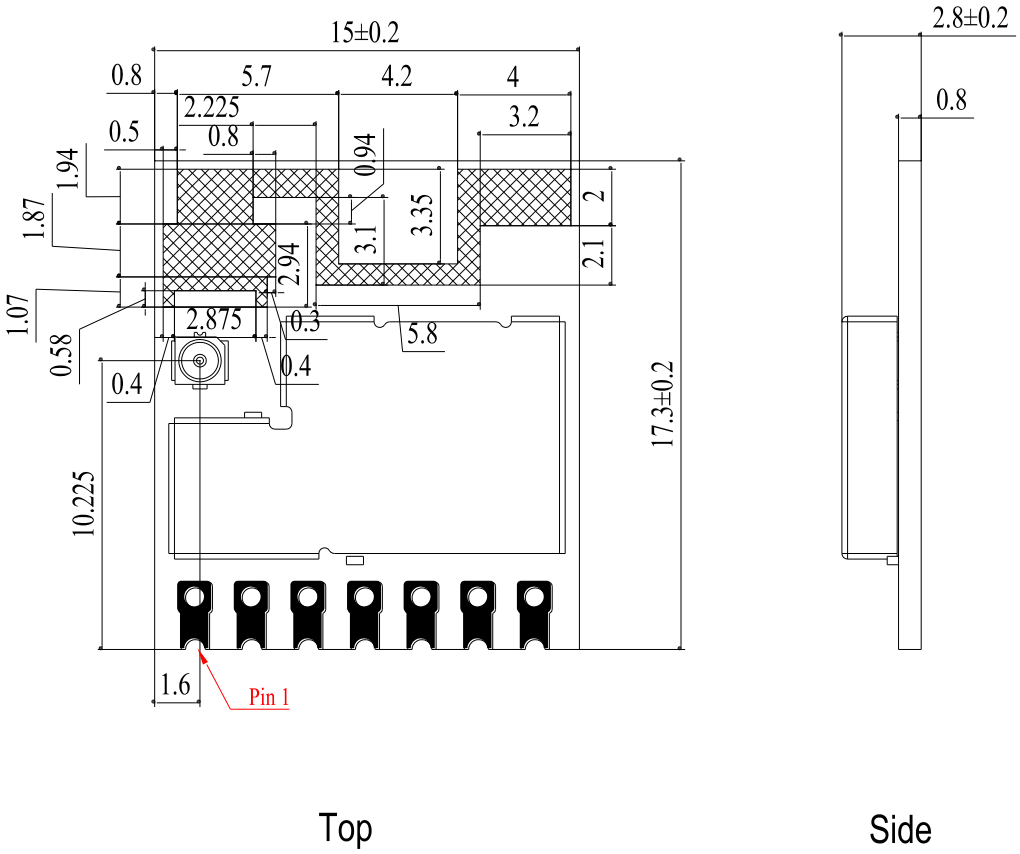

Figure 15: Top and Side Dimensions

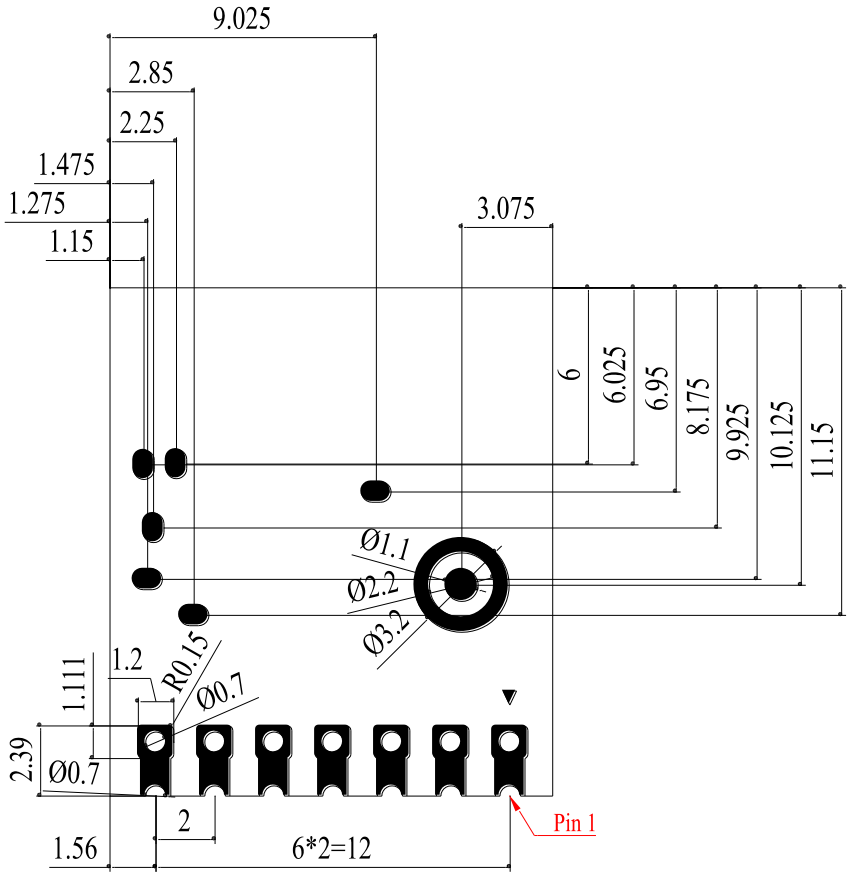

Figure 16: Bottom Dimensions (Bottom View)

NOTE

The package warpage level of the module refers to the *JEITA ED-7306* standard.

7.2. Recommended Footprint

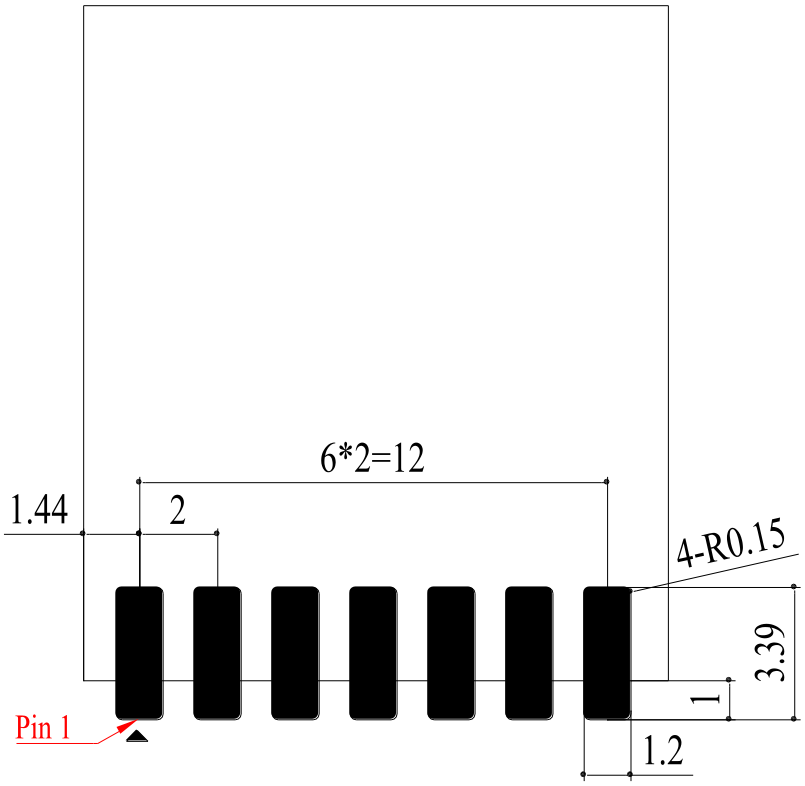

Figure 17: Recommended Footprint

NOTE

Keep at least 3 mm between the module and other components on the motherboard to improve soldering quality and maintenance convenience.

7.3. Top and Bottom Views

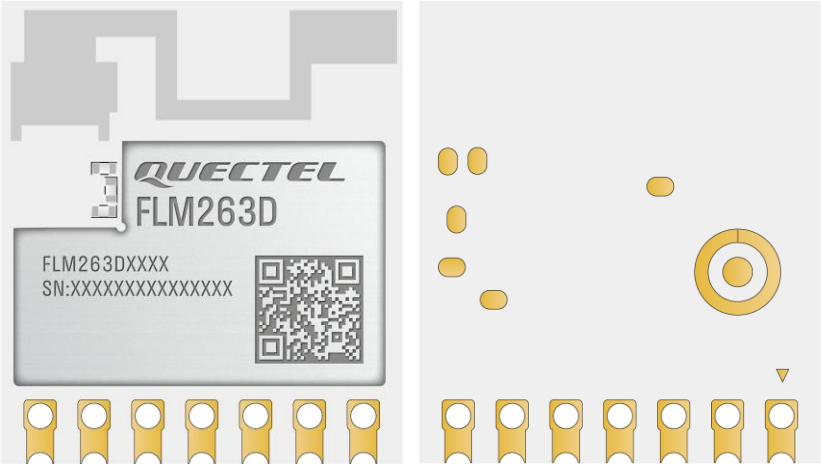

Figure 18: Top and Bottom Views (PCB Antenna)

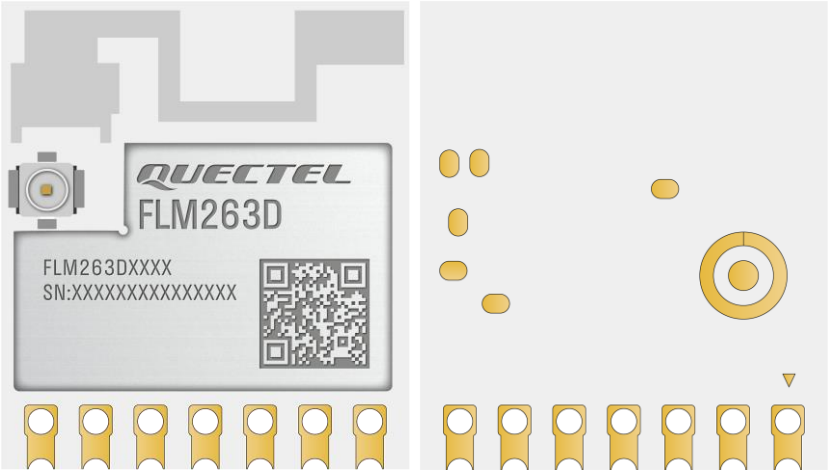

Figure 19: Top and Bottom Views (RF Coaxial Connector)

NOTE

1. Images above are for illustrative purposes only and may differ from the actual module. For authentic appearance and label, please refer to the module received from Quectel.
2. The RF coaxial connector is not available when the module is designed with a PCB antenna.

8 Storage, Manufacturing & Packaging

8.1. Storage Conditions

The module is provided with vacuum-sealed packaging. MSL of the module is rated as 3. The storage requirements are shown below.

1. Recommended Storage Condition: the temperature should be 23 ±5 °C and the relative humidity should be 35–60 %.

2. Shelf life (in a vacuum-sealed packaging): 12 months in Recommended Storage Condition.

3. Floor life: 168 hours [7] in a factory where the temperature is 23 ±5 °C and relative humidity is below 60 %. After the vacuum-sealed packaging is removed, the module must be processed in reflow soldering or other high-temperature operations within 168 hours. Otherwise, the module should be stored in an environment where the relative humidity is less than 10 % (e.g., a dry cabinet).

4. The module should be pre-baked to avoid blistering, cracks and inner-layer separation in PCB under the following circumstances:

   - The module is not stored in Recommended Storage Condition;
   - Violation of the third requirement mentioned above;
   - Vacuum-sealed packaging is broken, or the packaging has been removed for over 24 hours;
   - Before module repairing.

5. If needed, the pre-baking should follow the requirements below:

   - The module should be baked for 8 hours at 120 ±5 °C;
   - The module must be soldered to PCB within 24 hours after the baking, otherwise it should be put in a dry environment such as in a dry cabinet.

[7] This floor life is only applicable when the environment conforms to *IPC/JEDEC J-STD-033*. It is recommended to start the solder reflow process within 24 hours after the package is removed if the temperature and moisture do not conform to, or are not sure to conform to *IPC/JEDEC J-STD-033*. Do not unpack the modules in large quantities until they are ready for soldering.

NOTE

1. To avoid blistering, layer separation and other soldering issues, extended exposure of the module to the air is forbidden.
2. Take out the module from the package and put it on high-temperature-resistant fixtures before baking. If shorter baking time is desired, see *IPC/JEDEC J-STD-033* for the baking procedure.
3. Pay attention to ESD protection, such as wearing anti-static gloves, when touching the modules.

8.2. Manufacturing and Soldering

Push the squeegee to apply the solder paste on the surface of stencil, thus making the paste fill the stencil openings and then penetrate to the PCB. Apply proper force on the squeegee to produce a clean stencil surface on a single pass. To guarantee module soldering quality, the thickness of stencil for the module is recommended to be 0.15–0.18 mm. For more details, see ***document [2]***.

The recommended peak reflow temperature should be 235–246 ºC, with 246 ºC as the absolute maximum reflow temperature. To avoid damage to the module caused by repeated heating, it is recommended that the module should be mounted only after reflow soldering for the other side of PCB has been completed. The recommended reflow soldering thermal profile (lead-free reflow soldering) and related parameters are shown below.

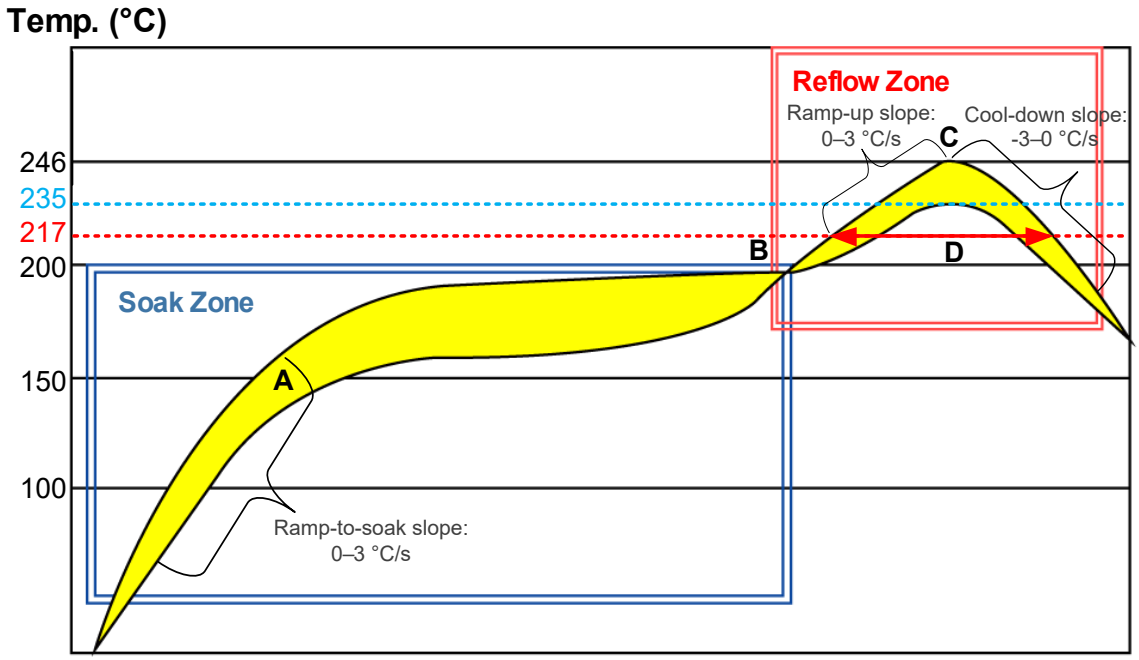

Figure 20: Recommended Reflow Soldering Thermal Profile

Table 24: Recommended Thermal Profile Parameters

Factor	Recommended Value
Soak Zone	
Ramp-to-soak slope	0–3 °C/s
Soak time (between A and B: 150 °C and 200 °C)	70–120 s
Reflow Zone	
Ramp-up slope	0–3 °C/s
Reflow time (D: over 217 °C)	40–70 s
Max. temperature	235–246 °C
Cool-down slope	-3–0 °C/s
Reflow Cycle	
Max. reflow cycle	1

NOTE

1. The above profile parameter requirements are for the measured temperature of solder joints. Both the hottest and coldest spots of solder joints on the PCB should meet the above requirements.
2. During manufacturing and soldering, or any other processes that may contact the module directly, NEVER wipe the module's shielding can with organic solvents, such as acetone, ethyl alcohol, isopropyl alcohol, trichloroethylene, etc. Otherwise, the shielding can may become rusted.
3. The shielding can for the module is made of Cupro-Nickel base material. It is tested that after 12 hours' Neutral Salt Spray test, the laser engraved label information on the shielding can is still clearly identifiable and the QR code is still readable, although white rust may be found.
4. If a conformal coating is necessary for the module, do NOT use any coating material that may chemically react with the PCB or shielding cover, and prevent the coating material from flowing into the module.
5. Avoid using ultrasonic technology for module cleaning since it can damage crystals inside the module.
6. Due to the complexity of the SMT process, please contact Quectel Technical Support in advance for any situation that you are not sure about, or any process (e.g. selective soldering, ultrasonic soldering) that is not mentioned in ***document [2]***.

8.3. Packaging Specifications

This chapter describes only the key parameters and process of packaging. All figures below are for reference only. The appearance and structure of the packaging materials are subject to the actual delivery.

8.3.1. Carrier Tape

Carrier tape dimensions are detailed below:

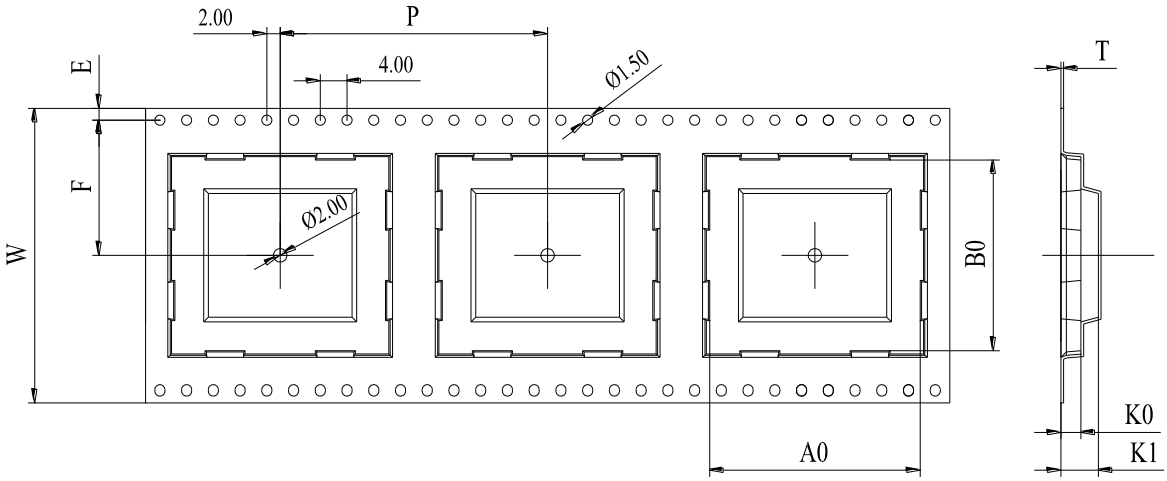

Figure 21: Carrier Tape Dimension Drawing

Table 25: Carrier Tape Dimension Table (Unit: mm)

W	P	T	A0	B0	K0	K1	F	E
32	24	0.4	17.7	15.4	3.3	4.6	14.2	1.75

8.3.2. Plastic Reel

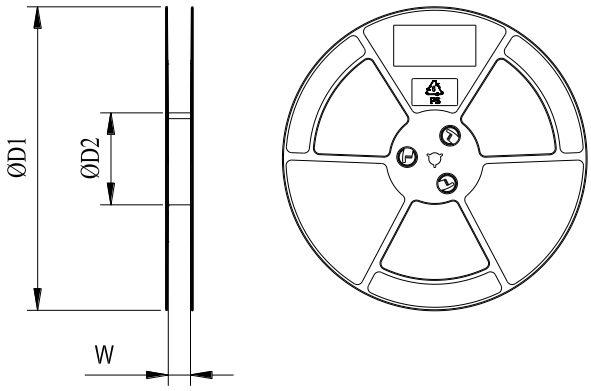

Figure 22: Plastic Reel Dimension Drawing

Table 26: Plastic Reel Dimension Table (Unit: mm)

øD1	øD2	W
330	100	32.5

8.3.3. Mounting Direction

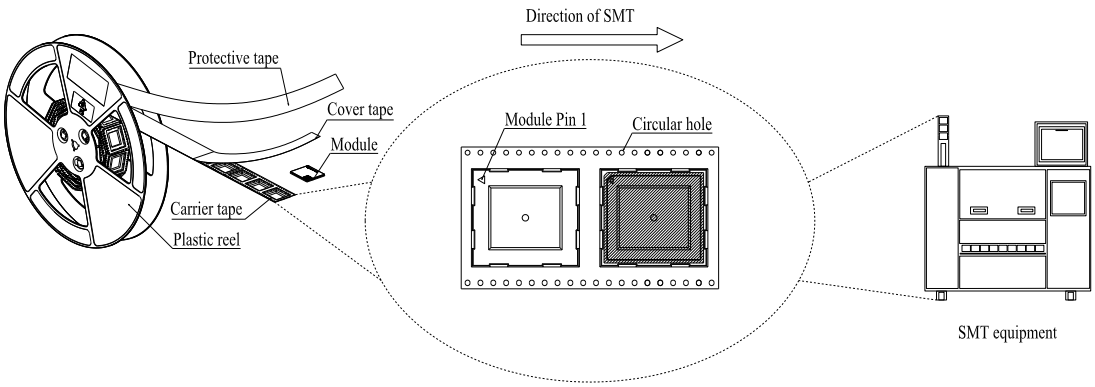

Figure 23: Mounting Direction

8.3.4. Packaging Process

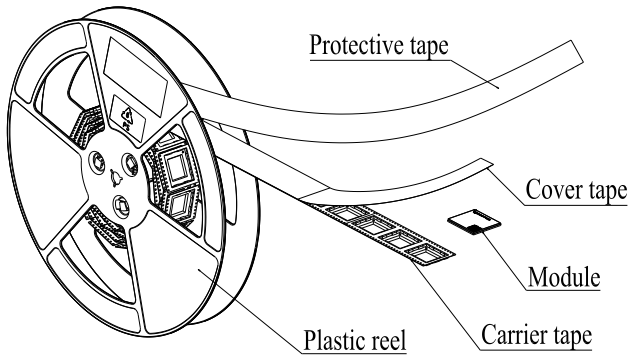

Place the modules into the carrier tape and use the cover tape to cover them; then wind the heat-sealed carrier tape on the plastic reel and use the protective tape for protection. 1 plastic reel can load 500 modules.

Place the packaged plastic reel, 1 humidity indicator card and 1 desiccant bag into a vacuum bag, then vacuumize it.

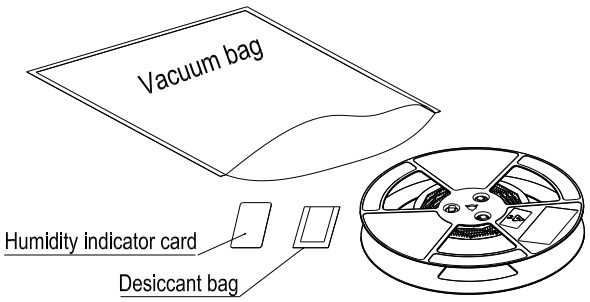

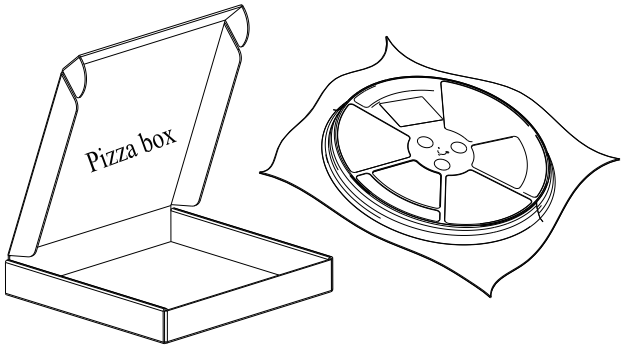

Place the vacuum-packed plastic reel inside the pizza box.

Put 4 packaged pizza boxes into 1 carton box and seal it. 1 carton box can pack 2000 modules.

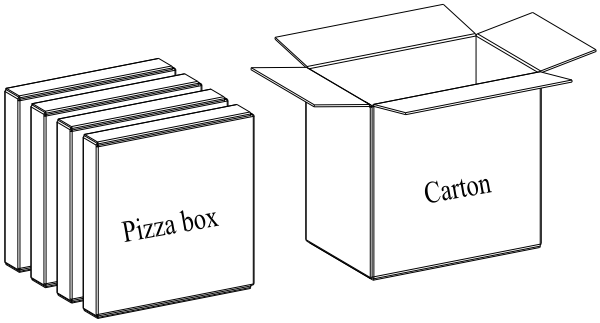

Figure 24: Packaging Process

9 Appendix References

Table 27: Reference Documents

Document Name
[1] Quectel_FLM263D_TE-B_User_Guide
[2] Quectel_Module_SMT_Application_Note

Table 28: Terms and Abbreviations

Abbreviation	Description
ADC	Analog-to-Digital Converter
AP	Access Point
BLE	Bluetooth Low Energy
BPSK	Binary Phase Shift Keying
CCK	Complementary Code Keying
CDM	Charged Device Model
DIP	Dual In-line Package
ESD	Electrostatic Discharge
EVM	Error Vector Magnitude
GFSK	Gauss Frequency Shift Keying
GND	Ground
GPIO	General-Purpose Input/Output
HBM	Human Body Model

HT	High Throughput
IEEE	Institute of Electrical and Electronics Engineers
I/O	Input / Output
IoT	Internet of Things
LCC	Leadless Chip Carrier (package)
Mbps	Megabits per second
MCS	Modulation and Coding Scheme
MCU	Microcontroller Unit
MSL	Moisture Sensitivity Level
OTA	Over-The-Air
PCB	Printed Circuit Board
PSK	Pre-Shared Key
PWM	Pulse Width Modulation
QAM	Quadrature Amplitude Modulation
QPSK	Quadrature Phase Shift Keying
RAM	Random Access Memory
RF	Radio Frequency
RoHS	Restriction of Hazardous Substances
SAE	Simultaneous Authentication of Equals
SMT	Surface Mount Technology
SRAM	Static Random Access Memory
STA	Station
TVS	Transient Voltage Suppressor
Tx	Transmit
UART	Universal Asynchronous Receiver/Transmitter

V_{IH}	High-level Input Voltage
V_{IL}	Low-level Input Voltage
Vmax	Maximum Voltage
Vmin	Minimum Voltage
Vnom	Nominal Voltage Value
V_{OH}	High-level Output Voltage
V_{OL}	Low-level Output Voltage
VSWR	Voltage Standing Wave Ratio
WPA	Wi-Fi Protected Access

Conformity

FCC regulatory conformance：
This device complies with Part 15 of the FCC Rules. Operation is subject to the following two conditions:

(1) This device may not cause harmful interference.
(2) This device must accept any interference received, including interference that may cause undesired operation.

NOTE: This equipment has been tested and found to comply with the limits for a Class B digital device, pursuant to part 15 of the FCC Rules. These limits are designed to provide reasonable protection against harmful interference in a residential installation.
This equipment generates uses and can radiate radio frequency energy and, if not installed and used in accordance with the instructions, may cause harmful interference to radio communications. However, there is no guarantee that interference will not occur in a particular installation. If this equipment does cause harmful interference to radio or television reception, which can be determined by turning the equipment off and on, the user is encouraged to try to correct the interference by one or more of the following measures:
- Reorient or relocate the receiving antenna.
- Increase the separation between the equipment and receiver.
-Connect the equipment into an outlet on a circuit different from that to which the receiver is connected.
-Consult the dealer or an experienced radio/TV technician for help

NOTE: The manufacturer is not responsible for any radio or TV interference caused by unauthorized modifications to this equipment. Such modifications could void the user's authority to operate the equipment.

FCC Radiation Exposure Statement:
This equipment complies with FCC radiation exposure limits set forth for an uncontrolled environment. This equipment should be installed and operated with minimum distance 20cm between the radiator & your body.

- English: "
This device complies with Industry Canada licence-exempt RSS standard(s). Operation is subject to the following two conditions:
(1) this device may not cause interference, and
(2) this device must accept any interference, including interference thatmay cause undesired operation of the device."

- French:"
Le présent appareil est conforme aux CNR d'Industrie Canada applicables
aux appareils radio exempts de licence. L'exploitation est autorisée aux deux conditions suivantes :
(1) l'appareil nedoit pas produire de brouillage, et
(2) l'utilisateur de l'appareil doit accepter tout brouillage radioélectrique
subi, même si le brouillage est susceptible d'en compromettre le fonctionnement."

ORIGINAL EQUIPMENT MANUFACTURER (OEM) NOTES

The OEM must certify the final end product to comply with unintentional radiators (FCC Sections 15.107 and 15.109) before declaring compliance of the final product to Part 15 of the FCC rules and regulations. Integration into devices that are directly or indirectly connected to AC lines must add with Class II Permissive Change.

The OEM must comply with the FCC labeling requirements. If the module's label is not visible when installed, then an additional permanent label must be applied on the outside of the finished product which states: "Contains transmitter module FCC ID: **XMR2023FLM263D**". Additionally, the following statement should be included on the label and in the final product's user manual: "This device complies with Part 15 of the FCC Rules. Operation is subject to the following two conditions:
(1) This device may not cause harmful interferences, and
(2) this device must accept any interference received, including interference that may cause undesired operation."

The module is limited to installation in mobile or fixed applications. Separate approval is required for all other operating configurations, including portable configuration with respect to Part 2.1093 and different antenna configurations.

A module or modules can only be used without additional authorizations if they have been tested and granted under the same intended end‑use operational conditions, including simultaneous transmission operations. When they have not been tested and granted in this manner, additional testing and/or FCC application filing may be required. The most straightforward approach to address additional testing conditions is to have the grantee responsible for the certification of at least one of the modules submit a permissive change application. When having a module grantee file a permissive change is not practical or feasible, the following guidance provides some additional options for host manufacturers. Integrations using modules where additional testing and/or FCC application filing(s) may be required are: (A) a module used in devices requiring additional RF exposure compliance information (e.g., MPE evaluation or SAR testing); (B) limited and/or split modules not meeting all of the module requirements; and (C) simultaneous transmissions for independent collocated transmitters not previously granted together.

This Module is full modular approval, it is limited to OEM installation ONLY.
Integration into devices that are directly or indirectly connected to AC lines must add with Class II Permissive Change. (OEM) Integrator has to assure compliance of the entire end product include the integrated Module. Additional measurements (15B) and/or equipment authorizations (e.g. Verification) may need to be addressed depending on co-location or simultaneous transmission issues if applicable. (OEM) Integrator is reminded to assure that these installation instructions will not be made available to the end user

Requirement per KDB996369 D03

2.2 List of applicable FCC rules

List the FCC rules that are applicable to the modular transmitter. These are the rules that specifically establish the bands of operation, the power, spurious emissions, and operating fundamental frequencies. DO NOT list compliance to unintentional-radiator rules (Part 15 Subpart B) since that is not a condition of a module grant that is extended to a host manufacturer. See also Section 2.10 below concerning the need to notify host manufacturers that further testing is required.3

Explanation: This module meets the requirements of FCC part 15C(15.247).

2.3 Summarize the specific operational use conditions

Describe use conditions that are applicable to the modular transmitter, including for example any limits on antennas, etc. For example, if point-to-point antennas are used that require reduction in power or compensation for cable loss, then this information must be in the instructions. If the use condition limitations extend to professional users, then instructions must state that this information also extends to the host manufacturer’s instruction manual. In addition, certain information may also be needed, such as peak gain per frequency band and minimum gain, specifically for master devices in 5 GHz DFS bands.

Explanation: The EUT has a Chip Antenna, and the antenna use a permanently attached antenna which is not replaceable.

2.4 Limited module procedures

If a modular transmitter is approved as a “limited module,” then the module manufacturer is responsible for approving the host environment that the limited module is used with. The manufacturer of a limited module must describe, both in the filing and in the installation instructions, the alternative means that the limited module manufacturer uses to verify that the host meets the necessary requirements to satisfy the module limiting conditions.

A limited module manufacturer has the flexibility to define its alternative method to address the conditions that limit the initial approval, such as: shielding, minimum signaling amplitude, buffered modulation/data inputs, or power supply regulation. The alternative method could include that the limited module manufacturer reviews detailed test data or host designs prior to giving the host manufacturer approval.

This limited module procedure is also applicable for RF exposure evaluation when it is necessary to demonstrate compliance in a specific host. The module manufacturer must state how control of the product into which the modular transmitter will be installed will be maintained such that full compliance of the product is always ensured. For additional hosts other than the specific host originally granted with a limited module, a Class II permissive change is required on the module grant to register the additional host as a specific host also approved with the module.

Explanation: The module is not a limited module.

2.5 Trace antenna designs

For a modular transmitter with trace antenna designs, see the guidance in Question 11 of KDB Publication 996369 D02 FAQ – Modules for Micro-Strip Antennas and traces. The integration information shall include for the TCB review the integration instructions for the following aspects:
layout of trace design, parts list (BOM), antenna, connectors, and isolation requirements.
a) Information that includes permitted variances (e.g., trace boundary limits, thickness, length, width, shape(s), dielectric constant, and impedance as applicable for each type of antenna);
b) Each design shall be considered a different type (e.g., antenna length in multiple(s) of frequency,
the wavelength, and antenna shape (traces in phase) can affect antenna gain and must be considered);
c) The parameters shall be provided in a manner permitting host manufacturers to design the printed circuit (PC) board layout;
d) Appropriate parts by manufacturer and specifications;
e) Test procedures for design verification; and
f) Production test procedures for ensuring compliance.
The module grantee shall provide a notice that any deviation(s) from the defined parameters of the antenna trace, as described by the instructions, require that the host product manufacturer must notify the module grantee that they wish to change the antenna trace design. In this case, a Class II permissive change application is required to be filed by the grantee, or the host manufacturer can take responsibility through the change in FCC ID (new application) procedure followed by a Class II permissive change application.
Explanation: Yes, The module with trace antenna designs, and This manual has been shown the layout of trace design, antenna, connectors, and isolation requirements.

2.6 RF exposure considerations

It is essential for module grantees to clearly and explicitly state the RF exposure conditions that permit a host product manufacturer to use the module. Two types of instructions are required for RF exposure information: (1) to the host product manufacturer, to define the application conditions (mobile, portable – xx cm from a person’s body); and (2) additional text needed for the host product manufacturer to provide to end users in their end-product manuals. If RF exposure statements and use conditions are not provided, then the host product manufacturer is required to take responsibility of the module through a change in FCC ID (new application).
Explanation: This module complies with FCC RF radiation exposure limits set forth for an uncontrolled environment, This equipment should be installed and operated with a minimum distance of 20 centimeters between the radiator and your body." This module is designed to comply with the FCC statement, FCC ID is: XMR2023FLM263D.

2.7 Antennas

A list of antennas included in the application for certification must be provided in the instructions. For modular transmitters approved as limited modules, all applicable professional installer instructions must be included as part of the information to the host product manufacturer. The antenna list shall also identify the antenna types (monopole, PIFA, dipole, etc. (note that for example an “omni-directional antenna” is not considered to be a specific “antenna type”)).

For situations where the host product manufacturer is responsible for an external connector, for example with an RF pin and antenna trace design, the integration instructions shall inform the installer that unique antenna connector must be used on the Part 15 authorized transmitters used in the host product. The module manufacturers shall provide a list of acceptable unique connectors.

Explanation: The EUT has PCB Antenna, and the antenna use a permanently attached antenna which is unique.

2.8 Label and compliance information

Grantees are responsible for the continued compliance of their modules to the FCC rules. This includes advising host product manufacturers that they need to provide a physical or e-label stating “Contains FCC ID” with their finished product. See Guidelines for Labeling and User Information for RF Devices – KDB Publication 784748.

Explanation: The host system using this module, should have label in a visible area indicated the following texts: “Contains FCC ID: XMR2023FLM263D, Contains IC: 10224A-2023FLM263D”

2.9 Information on test modes and additional testing requirements5

Additional guidance for testing host products is given in KDB Publication 996369 D04 Module Integration Guide. Test modes should take into consideration different operational conditions for a stand-alone modular transmitter in a host, as well as for multiple simultaneously transmitting modules or other transmitters in a host product.

The grantee should provide information on how to configure test modes for host product evaluation for different operational conditions for a stand-alone modular transmitter in a host, versus with multiple, simultaneously transmitting modules or other transmitters in a host.

Grantees can increase the utility of their modular transmitters by providing special means, modes, or instructions that simulates or characterizes a connection by enabling a transmitter. This can greatly simplify a host manufacturer’s determination that a module as installed in a host complies with FCC requirements.

Explanation: Top band can increase the utility of our modular transmitters by providing instructions that simulates or characterizes a connection by enabling a transmitter.

2.10 Additional testing, Part 15 Subpart B disclaimer

The grantee should include a statement that the modular transmitter is only FCC authorized for the specific rule parts (i.e., FCC transmitter rules) listed on the grant, and that the host product manufacturer is responsible for compliance to any other FCC rules that apply to the host not covered by the modular transmitter grant of certification. If the grantee markets their product as being Part 15 Subpart B compliant (when it also contains unintentional-radiator digital circuity), then the grantee shall provide a notice stating that the final host product still requires Part 15 Subpart B compliance testing with the modular transmitter installed.

Explanation: The module without unintentional-radiator digital circuity, so the module does not require an evaluation by FCC Part 15 Subpart B. The host shoule be evaluated by the FCC Subpart B.

IC labeling requirement for the final end product:

The final end product must be labeled in a visible area with the following “Contains IC: 10224A-2023FLM263D”

The Host Marketing Name (HMN) must be indicated at any location on the exterior of the host product or product packaging or product literature, which shall be available with the host product or online.

This radio transmitter [IC: 10224A-2023FLM263D] has been approved by Innovation, Science and Economic Development Canada to operate with the antenna types listed below, with the maximum permissible gain indicated. Antenna types not included in this list that have a gain greater than the maximum gain indicated for any type listed are strictly prohibited for use with this device.

Frequency range	Manufacturer	Peak gain	Impedance	Antenna type
2402~2480MHz	Quectel Wireless Solutions Co., Ltd.	0.4dBi	50 Ω	PCB Antenna
2412~2462MHz	Quectel Wireless Solutions Co., Ltd.	0.4dBi	50 Ω	PCB Antenna