FLM340D

Hardware Design

Wi-Fi&Bluetooth Module Series

Version: 1.0.0

Date: 2023-07-12

Status: Preliminary

At Quectel, our aim is to provide timely and comprehensive services to our customers. If you require any assistance, please contact our headquarters:

Quectel Wireless Solutions Co., Ltd.
Building 5, Shanghai Business Park Phase III (Area B), No.1016 Tianlin Road, Minhang District, Shanghai 200233, China
Tel: +86 21 5108 6236
Email: info@quectel.com

Or our local offices. For more information, please visit:
http://www.quectel.com/support/sales.htm.

For technical support, or to report documentation errors, please visit:
http://www.quectel.com/support/technical.htm.
Or email us at: support@quectel.com.

Legal Notices

We offer information as a service to you. The provided information is based on your requirements and we make every effort to ensure its quality. You agree that you are responsible for using independent analysis and evaluation in designing intended products, and we provide reference designs for illustrative purposes only. Before using any hardware, software or service guided by this document, please read this notice carefully. Even though we employ commercially reasonable efforts to provide the best possible experience, you hereby acknowledge and agree that this document and related services hereunder are provided to you on an “as available” basis. We may revise or restate this document from time to time at our sole discretion without any prior notice to you.

Use and Disclosure Restrictions

License Agreements

Documents and information provided by us shall be kept confidential, unless specific permission is granted. They shall not be accessed or used for any purpose except as expressly provided herein.

Copyright

Our and third-party products hereunder may contain copyrighted material. Such copyrighted material shall not be copied, reproduced, distributed, merged, published, translated, or modified without prior written consent. We and the third party have exclusive rights over copyrighted material. No license shall be granted or conveyed under any patents, copyrights, trademarks, or service mark rights. To avoid ambiguities, purchasing in any form cannot be deemed as granting a license other than the normal non-exclusive, royalty-free license to use the material. We reserve the right to take legal action for noncompliance with abovementioned requirements, unauthorized use, or other illegal or malicious use of the material.

Trademarks

Except as otherwise set forth herein, nothing in this document shall be construed as conferring any rights to use any trademark, trade name or name, abbreviation, or counterfeit product thereof owned by Quectel or any third party in advertising, publicity, or other aspects.

Third-Party Rights

This document may refer to hardware, software and/or documentation owned by one or more third parties ("third-party materials"). Use of such third-party materials shall be governed by all restrictions and obligations applicable thereto.

We make no warranty or representation, either express or implied, regarding the third-party materials, including but not limited to any implied or statutory, warranties of merchantability or fitness for a particular purpose, quiet enjoyment, system integration, information accuracy, and non-infringement of any third-party intellectual property rights with regard to the licensed technology or use thereof. Nothing herein constitutes a representation or warranty by us to either develop, enhance, modify, distribute, market, sell, offer for sale, or otherwise maintain production of any our products or any other hardware, software, device, tool, information, or product. We moreover disclaim any and all warranties arising from the course of dealing or usage of trade.

Privacy Policy

To implement module functionality, certain device data are uploaded to Quectel's or third-party's servers, including carriers, chipset suppliers or customer-designated servers. Quectel, strictly abiding by the relevant laws and regulations, shall retain, use, disclose or otherwise process relevant data for the purpose of performing the service only or as permitted by applicable laws. Before data interaction with third parties, please be informed of their privacy and data security policy.

Disclaimer

a) We acknowledge no liability for any injury or damage arising from the reliance upon the information.
b) We shall bear no liability resulting from any inaccuracies or omissions, or from the use of the information contained herein.
c) While we have made every effort to ensure that the functions and features under development are free from errors, it is possible that they could contain errors, inaccuracies, and omissions. Unless otherwise provided by valid agreement, we make no warranties of any kind, either implied or express, and exclude all liability for any loss or damage suffered in connection with the use of features and functions under development, to the maximum extent permitted by law, regardless of whether such loss or damage may have been foreseeable.
d) We are not responsible for the accessibility, safety, accuracy, availability, legality, or completeness of information, advertising, commercial offers, products, services, and materials on third-party websites and third-party resources.

Copyright © Quectel Wireless Solutions Co., Ltd. 2023. All rights reserved.

Safety Information

The following safety precautions must be observed during all phases of operation, such as usage, service or repair of any cellular terminal or mobile incorporating the module. Manufacturers of the cellular terminal should notify users and operating personnel of the following safety information by incorporating these guidelines into all manuals of the product. Otherwise, Quectel assumes no liability for customers' failure to comply with these precautions.

	Full attention must be paid to driving at all times to reduce the risk of an accident. Using a mobile phone while driving (even with a handsfree kit) causes distraction and can lead to an accident. Please comply with laws and regulations restricting the use of wireless devices while driving.
	Switch off the mobile terminal before boarding an aircraft. The operation of wireless appliances in an aircraft is forbidden to prevent interference with communication systems. If there is an Airplane Mode, it should be enabled prior to boarding an aircraft. Please consult the airline staff for more restrictions on the use of wireless devices on an aircraft.
	Wireless devices may cause interference on sensitive medical equipment, so please be aware of the restrictions on the use of wireless devices when in hospitals, clinics or other healthcare facilities.
	Terminals or mobiles operating over radio signal and cellular network cannot be guaranteed to connect in certain conditions, such as when the mobile bill is unpaid or the (U)SIM card is invalid. If emergency assistance is needed, use emergency call if the device supports it. To make or receive a call, the cellular or mobile terminal must be switched on in a service area with adequate cellular signal strength. In an emergency, the device with emergency call function cannot be used as the only contact method since network connection cannot be guaranteed under all circumstances.
	The terminal or mobile contains a transceiver. When it is ON, it receives and transmits radio frequency signals. RF interference can occur if it is used close to TV sets, radios, computers or other electric equipment.
	In locations with explosive or potentially explosive atmospheres, obey all posted signs and turn off wireless devices such as mobile phones or other cellular terminals. Areas with explosive or potentially explosive atmospheres include fueling areas, below decks on boats, fuel or chemical transfer or storage facilities, and areas where the air contains chemicals or particles such as grain, dust or metal powders.

About the Document

Revision History

Version	Date	Author	Description
-	2023-07-12	Lisa LI	Creation of the document
1.0.0	2023-07-12	Lisa LI Joyce Yu	Preliminary

Contents

Safety Information **3**

About the Document **4**

Contents **5**

Table Index **7**

Figure Index **8**

1 Introduction **9**
1.1. Special Marks 9

2 Product Overview **10**
2.1. Key Features 11

3 Application Interfaces **12**
3.1. Pin/Test Point Assignment 12
3.2. Pin/Test Point Description 13
3.3. GPIO Multiplexing 15
3.4. Application Interfaces 16
3.4.1. UARTs 16
3.4.2. PWM Interfaces 16
3.4.3. ADC Interfaces* 17

4 Operating Characteristics **18**
4.1. Power Supply 18
4.1.1. Reference Design for Power Supply 18
4.2. Turn On 19
4.3. Reset 19
4.4. Download Mode 20

5 RF Performances **21**
5.1. Wi-Fi Performances 21
5.2. Bluetooth Performances 21
5.3. RF Antenna Interface 22
5.3.1.1. Reference Design 22
5.3.1.2. Antenna Design Requirements 23
5.3.1.3. RF Routing Guidelines 23
5.3.1.4. RF Connector Recommendation 25

6 Electrical Characteristics & Reliability **28**
6.1. Absolute Maximum Ratings 28
6.2. Power Supply Ratings 28
6.3. Wi-Fi Power Consumption 29
6.4. Digital I/O Characteristics 29

6.5. ESD Protection....30

7 Mechanical Information....31

7.1. Mechanical Dimensions....31

7.2. Recommended Footprint....33

7.3. Top and Bottom Views....34

8 Storage and Packaging....35

8.1. Storage Conditions....35

8.2. Packaging Specifications....36

8.2.1. Carrier Tape....36

8.2.2. Plastic Reel....37

8.2.3. Packaging Process....37

9 Appendix References....39

Table Index

Table 1 : Special Marks 9
Table 2 : Basic Information 10
Table 3 : Key Features 11
Table 4 : I/O Parameter Description 13
Table 5 : Pin Description 14
Table 6 : Test Point Description 14
Table 7 : GPIO Multiplexing 15
Table 8 : Test Point Definition of UARTs 16
Table 9 : Pin Definition of PWM Interfaces 17
Table 10 : Pin Definition of ADC Interfaces 17
Table 11 : ADC Features 17
Table 12 : Pin Definition of Power Supply and GND Pins 18
Table 13 : Test Point Definition of CHIP_EN 19
Table 14 : Test Point Definition of CHIP_EN 19
Table 15 : Wi-Fi Performances 21
Table 16 : Bluetooth Performances 21
Table 17 : ANT_WIFI/BT Pin Definition 22
Table 18 : Antenna Design Requirements 23
Table 19 : Absolute Maximum Ratings (Unit: V) 28
Table 20 : Module Power Supply Ratings (Unit: V) 28
Table 21 : Power Consumption in RF Non-signalling Modes 29
Table 22 : VBAT I/O Characteristics (Unit: V) 29
Table 23 : ESD Characteristics (Unit: kV) 30
Table 24 : Carrier Tape Dimension Table (Unit: mm) 36
Table 25 : Plastic Reel Dimension Table (Unit: mm) 37
Table 26 : Reference Documents 39
Table 27 : Terms and Abbreviations 39

Figure Index

Figure 2 : Pin Assignment 12
Figure 3 : Test Point Assignment 13
Figure 4 : VBAT Reference Circuit....18
Figure 5 : Turn-on Timing....19
Figure 6 : Reset Timing 20
Figure 7 : Antenna Reference Design....23
Figure 8 : Microstrip Design on a 2-layer PCB 24
Figure 9 : Coplanar Waveguide Design on a 2-layer PCB 24
Figure 10 : Coplanar Waveguide Design on a 4-layer PCB (Layer 3 as Reference Ground)....24
Figure 11 : Coplanar Waveguide Design on a 4-layer PCB (Layer 4 as Reference Ground)....24
Figure 12 : Dimensions of the Receptacle (Unit: mm) 26
Figure 13 : Specifications of Mated Plugs....26
Figure 14 : Space Factor of Mated Connectors (Unit: mm) 27
Figure 15 : Top and Side Dimensions 31
Figure 16 : Bottom Dimensions (Bottom View)....32
Figure 17 : Recommended Footprint 33
Figure 18 : Top and Bottom Views 34
Figure 19 : Carrier Tape Dimension Drawing 36
Figure 20 : Plastic Reel Dimension Drawing 37
Figure 21 : Packaging Process....38

1 Introduction

QuecOpen® is a solution where the module acts as the main processor. Constant transition and evolution of both the communication technology and the market highlight its merits. It can help you to:

- Realize embedded applications' quick development and shorten product R&D cycle
- Simplify circuit and hardware structure design to reduce engineering costs
- Miniaturize products
- Reduce product power consumption
- Apply OTA technology
- Enhance product competitiveness and price-performance ratio

This document defines FLM340D in QuecOpen® solution and describes its air interfaces and hardware interfaces which are connected with your applications. The document provides a quickly insight into interface specifications, RF performance, electrical and mechanical details, as well as other related information of the module.

FCC ID:XMR2023FLM340D, IC:10224A-2023FLM340D
HVIN:FLM340D

1.1. Special Marks

Table 1: Special Marks

Mark	Definition
*	Unless otherwise specified, when an asterisk (*) is used after a function, feature, interface, pin name, AT command, or argument, it indicates that the function, feature, interface, pin, AT command, or argument is under development and currently not supported; and the asterisk (*) after a model indicates that the sample of the model is currently unavailable.
[···]	Brackets ([···]) used after a pin enclosing a range of numbers indicate all pins of the same type. For example, SDIO_DATA[0:3] refers to all four SDIO pins: SDIO_DATA0, SDIO_DATA1, SDIO_DATA2, and SDIO_DATA3.

2 Product Overview

FLM340D is a high-performance MCU Wi-Fi and Bluetooth module for smart-home and industrial IoT terminals supporting IEEE 802.11b/g/n and Bluetooth 5.2 standards. The module provides PWM and multiple ADC* interfaces for various applications.

FLM340D is a wave-soldering module with compact package. It includes:

- A 32-bit MCU running up to 120 MHz
- Built-in 256 KB RAM and 2M/4 MB Flash
- Supporting secondary development

Table 2: Basic Information

FLM340D	
Packaging type	DIP
Pin counts	6
Dimensions	(8.5 ±0.15) mm × (12.7±0.15) mm × (1.9 ±0.2) mm
Weight	Approx. 0.32 g

2.1. Key Features

Table 3: Key Features

Basic Information	
Protocols and Standards	● Wi-Fi Protocols: IEEE 802.11 b/g/n ● Bluetooth protocol: Bluetooth 5.2 ● All hardware components are fully compliant with EU RoHS directive
Power Supply	**VBAT Power Supply:** ● 3.0–3.6 V ● Typ.: 3.3 V
Temperature Ranges	● Operating temperature [1]: -40 to +105 °C ● Storage temperature: -45 to +115 °C
EVB Kit	FLM340D TE-B [2]
RF Antenna Interface	
Antenna Interface	● ANT_WIFI/BT ● 50 Ω characteristic impedance
Application Interface [3]	
Application Interfaces	PWM, ADC*

[1] Within the operating temperature range, the module's related performance meets IEEE and Bluetooth specifications.

[2] For more details about the interfaces, see ***Chapter 3.3*** and ***Chapter 3.4***.

3 Application Interfaces

3.1. Pin/Test Point Assignment

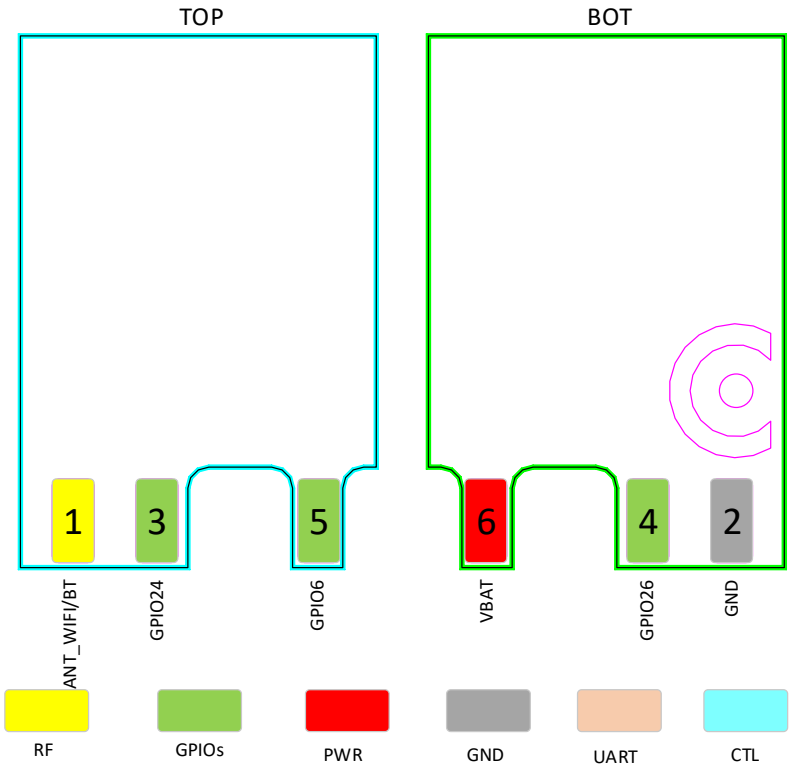

Figure 1: Pin Assignment

NOTE

1. The module provides 3 GPIO interfaces by default. In the case of multiplexing, it supports 3 PWM interfaces and 2 ADC interfaces*. For more details, see ***Chapter 3.3*** and ***Chapter 3.4***.
2. GND pin should be connected to ground.

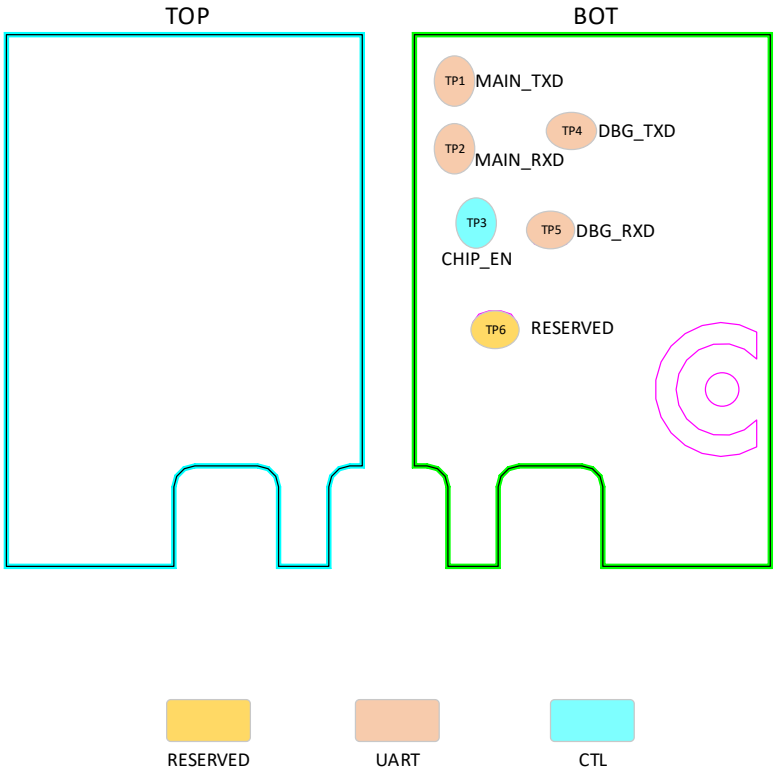

Figure 2: Test Point Assignment

3.2. Pin/Test Point Description

Table 4: I/O Parameter Description

Type	Description
DI	Digital Input
DO	Digital Output
DIO	Digital Input/Output
PI	Power Input

DC characteristics include power domain and rated current.

Table 5: Pin Description

Power Supply					
Pin Name	**Pin No.**	**I/O**	**Description**	**DC Characteristics**	**Comment**
VBAT	6	PI	Power supply for the module	Vmax = 3.6 V Vmin = 3.0 V Vnom = 3.3 V	It must be provided with sufficient current of at least 0.3 A.
GND	2				
GPIO Interfaces					
Pin Name	**Pin No.**	**I/O**	**Description**	**DC Characteristics**	**Comment**
GPIO24	3	DIO	General-purpose input/output	VBAT	Interrupt wakeup.
GPIO6	5	DIO	General-purpose input/output		
GPIO26	4	DIO	General-purpose input/output		
Antenna Interface					
Pin Name	**Pin No.**	**I/O**	**Description**	**DC Characteristics**	**Comment**
ANT-WIFI/BT	1	AIO	Wi-Fi/Bluetooth antenna interface		50 Ω characteristic impedance.

Table 6: Test Point Description

Control Signal				
TP Name	**Function**	**I/O**	**Description**	**Comment**
TP3	CHIP_EN	DI	Enable the module (default)	Hardware enable. Internally pulled up to 3.3 V. Active high.
		DI	Resets the module	Hardware reset. Internally pulled up to 3.3 V. Active low.
UARTs				
TP Name	**Feature**	**I/O**	**Description**	**Comment**

TP1	MAIN_TXD	DO	Main UART transmit	
TP2	MAIN_RXD	DI	Main UART receive	
TP4	DBG_TXD	DO	Debug UART transmit	Pull it down to GND with a 4.7 kΩ resistor for RF non-signaling test.
TP5	DBG_RXD	DI	Debug UART receive	
Other Signal				
TP Name	**Feature**	**I/O**	**Description**	**Comment**
TP6	RESERVED			

NOTE

TP1–TP5 are all VBAT power domain.

3.3. GPIO Multiplexing

The module provides 3 GPIO interfaces by default. Pins are defined as follows:

Table 7: GPIO Multiplexing

Pin Name	Pin No.	Alternate Function 0 (GPIO No.)	Alternate Function 1	Alternate Function 2	Alternate Function 3
GPIO6	5	GPIO6	13M_CLK_OUT	PWM0	-
GPIO24	3	GPIO24	ADC2	32K_CLK_OUT	PWM4
GPIO26	4	GPIO26	ADC1	IRDA	PWM5

NOTE

All GPIOs can be configured as interrupt source to interrupt the system in active mode or to wake it up from low power mode.

3.4. Application Interfaces

3.4.1. UARTs

The module provides two UARTs: the main UART and the debug UART.

Table 8: Test Point Definition of UARTs

TP Name	Pin No.	I/O	Description	Comment
TP1	MAIN_TXD	DO	Main UART transmit	
TP2	MAIN_RXD	DI	Main UART receive	
TP4	DBG_TXD	DO	Debug UART transmit	Pull it down to GND with a 4.7 kΩ resistor for RF non-signaling test.
TP5	DBG_RXD	DI	Debug UART receive	

The main UART can be used for AT command communication and data transmission. It sends and receives instruction data during downloading and debugging. The default baud rate is 115200 bps, and the maximum baud rate can reach 6 Mbps. The main UART is also available for firmware upgrade and supports a default baud rate of 921600 bps.

The debug UART supports 115200 bps baud rate by default, and is used for outputting partial logs with debugging tools.

3.4.2. PWM Interfaces

The module supports up to 3 PWM interfaces multiplexed with GPIOs. Pin description of PWM interfaces are as follows.

Table 9: Pin Definition of PWM Interfaces

Pin Name	Pin No.	Multiplexing Function	IO	Description
GPIO6	5	PWM0	DO	PWM0 out
GPIO24	3	PWM4	DO	PWM4 out
GPIO26	4	PWM5	DO	PWM5 out

3.4.3. ADC Interfaces*

In the case of multiplexing, the module supports 2 ADC interfaces whose voltage range is 0–2.4 V. To improve ADC accuracy, surround ADC trace with ground.

Table 10: Pin Definition of ADC Interfaces

Pin Name	Pin No.	Multiplexing Function	I/O	Description
GPIO24	3	ADC2	AI	General-purpose ADC interface
GPIO26	4	ADC1	AI	General-purpose ADC interface

Table 11: ADC Features

Parameter	Min.	Typ.	Max.	Unit
ADC Voltage Range	0	-	2.4	V
ADC Resolution Rate	-	13	-	bit

4 Operating Characteristics

4.1. Power Supply

Power supply pin and ground pins of the module are defined in the following table.

Table 12: Pin Definition of Power Supply and GND Pins

Pin Name	Pin No.	I/O	Description	Min.	Typ.	Max.	Unit
VBAT	6	PI	Power supply for the module	3.0	3.3	3.6	V
GND	2						

4.1.1. Reference Design for Power Supply

The module is powered by VBAT, and it is recommended to use a power supply chip that can provide sufficient current of at least 0.3 A output current. For better power supply performance, it is recommended to parallel a 22 µF decoupling capacitor, and two filter capacitors (1 µF and 100 nF) near the module's VBAT pin. C4 is reserved for debugging and is not mounted by default. In addition, it is recommended to add a TVS near the VBAT to improve the surge voltage bearing capacity of the module. In principle, the longer the VBAT trace is, the wider it should be.

VBAT reference circuit is shown below:

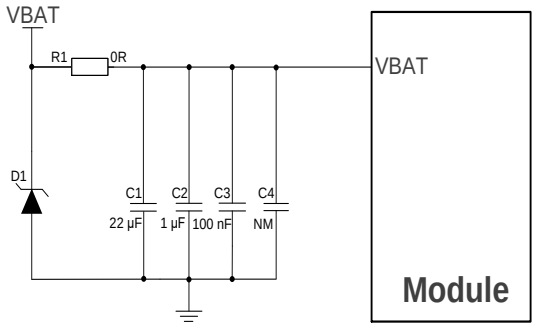

Figure 3: VBAT Reference Circuit

4.2. Turn On

After the module VBAT is powered on, keep the CHIP_EN at high level to realize the automatic startup of the module.

Table 13: Test Point Definition of CHIP_EN

TP Name	Function	I/O	Description	Comment
TP3	CHIP_EN	DI	Enable the module	Hardware enable. Internally pulled up to 3.3 V. Active high.

The turn-on timing is shown below:

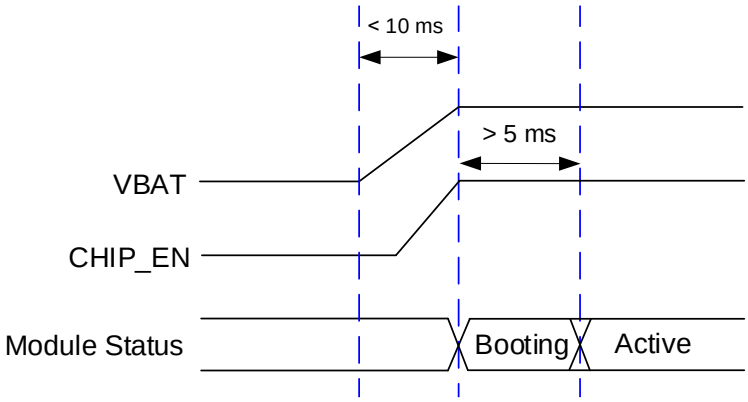

Figure 4: Turn-on Timing

4.3. Reset

Drive CHIP_EN low for at least 100 ms and then release it to reset the module.

Table 14: Test Point Definition of CHIP_EN

TP Name	Function	I/O	Description	Comment
TP3	CHIP_EN	DI	Reset the module	Hardware reset; Internally pulled up to 3.3 V; Active low.

The module reset timing is illustrated in the following figure.

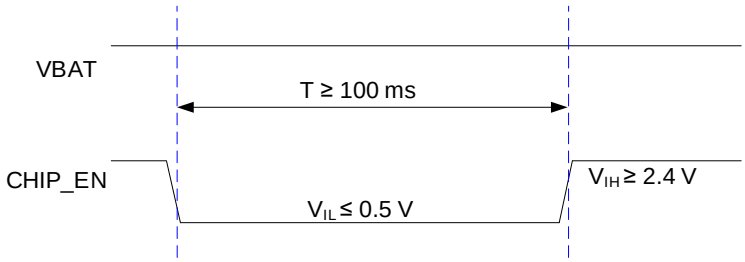

Figure 5: Reset Timing

4.4. Download Mode

Keep the input signal of CHIP_EN at low level during resetting or power-up and the module will enter download mode. In the download mode, the firmware can be download through the main UART.

5 RF Performances

5.1. Wi-Fi Performances

Table 15: Wi-Fi Performances

Operating Frequency
2.4 GHz: 2.400–2.4835 GHz
Modulation
BPSK, QPSK, CCK, 16QAM, 64QAM
Operating Mode
● AP ● STA
Encryption Mode
● AP: WPA2 ● STA: WPA3
Transmission Data Rate
● 802.11b: 1 Mbps, 2 Mbps, 5.5 Mbps, 11 Mbps ● 802.11g: 6 Mbps, 9 Mbps, 12 Mbps, 18 Mbps, 24 Mbps, 36 Mbps, 48 Mbps, 54 Mbps ● 802.11n: HT20 (MCS 0–7)

5.2. Bluetooth Performances

Table 16: Bluetooth Performances

Operating Frequency
2.400–2.4835 GHz

Modulation		
GFSK		
Operating Mode		
BLE		
Condition (VBAT = 3.3 V; Temp.: 25 °C)	**Typ.; Unit: dBm; Tolerance: ±2 dB**	
	Transmitting Power	**Receiving Sensitivity**
BLE (1 Mbps)	6	-95

5.3. RF Antenna Interface

The module provides one RF antenna pin (ANT_WIFI/BT), and the RF port requires 50 Ω characteristic impedance.

Appropriate antenna type and design should be used with matched antenna parameters according to specific application. It is required to perform a comprehensive functional test for the RF design before mass production of terminal products. The entire content of this chapter is provided for illustration only. Analysis, evaluation and determination are still necessary when designing target products.

Table 17: ANT_WIFI/BT Pin Definition

Pin Name	Pin No.	I/O	Description	Comment
ANT_WIFI/BT	1	AIO	Wi-Fi/Bluetooth antenna interface	50 Ω characteristic impedance.

5.3.1.1. Reference Design

For better RF performance, it is necessary to reserve a π matching circuit and add an ESD protection component. Matching components such as R1, C1, C2, and D1 should be placed as close to the antenna as possible. C1, C2, and D1 are not mounted by default. The parasitic capacitance of TVS should be less than 0.05 pF and R1 is recommended to be 0 Ω.

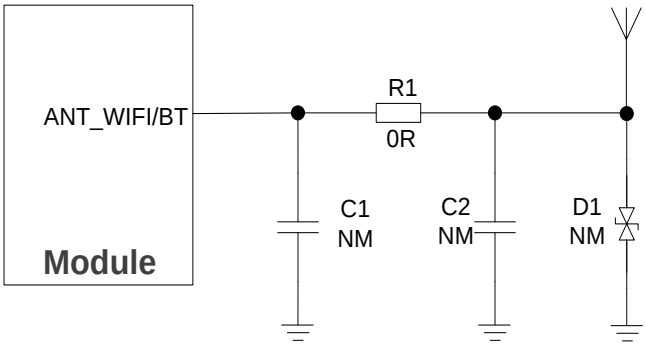

Figure 6: Antenna Reference Design

5.3.1.2. Antenna Design Requirements

Table 18: Antenna Design Requirements

Parameter	Requirement
Frequency Range (GHz)	2.400 – 2.4835
Cable Insertion Loss (dB)	< 1
VSWR	≤ 2 (Typ.)
Gain (dBi)	1 (Typ.)
Max. input power (W)	50
Input impedance (Ω)	50
Polarization type	Vertical

5.3.1.3. RF Routing Guidelines

For user's PCB, the characteristic impedance of all RF traces should be controlled to 50 Ω. The impedance of the RF traces is usually determined by the trace width (W), the materials' dielectric constant, the height from the reference ground to the signal layer (H), and the spacing between RF traces and grounds (S). Microstrip or coplanar waveguide is typically used in RF layout to control characteristic impedance. The following are reference designs of microstrip or coplanar waveguide with different PCB structures.

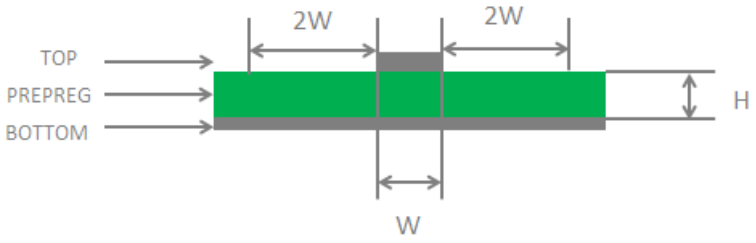

Figure 7: Microstrip Design on a 2-layer PCB

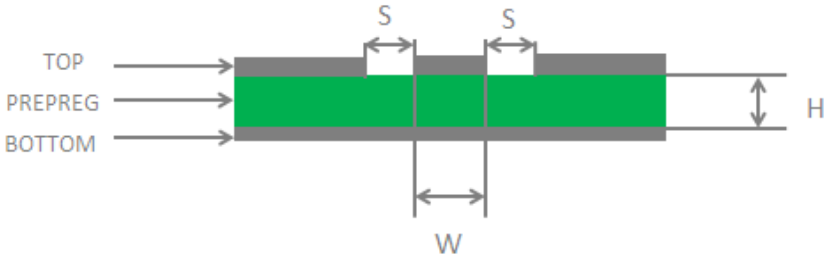

Figure 8: Coplanar Waveguide Design on a 2-layer PCB

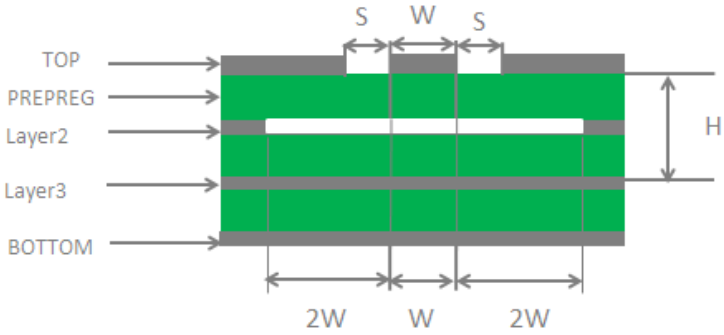

Figure 9: Coplanar Waveguide Design on a 4-layer PCB (Layer 3 as Reference Ground)

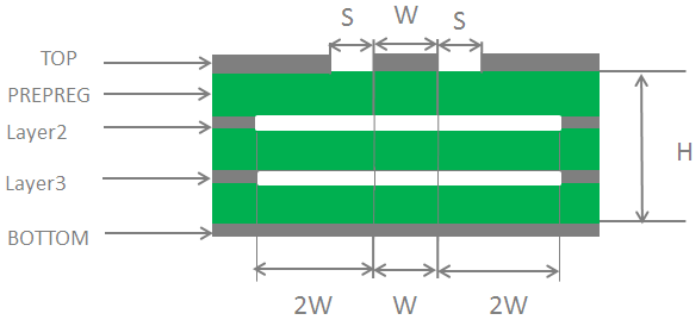

Figure 10: Coplanar Waveguide Design on a 4-layer PCB (Layer 4 as Reference Ground)

To ensure RF performance and reliability, follow the principles below in RF layout design:

- Use an impedance simulation tool to accurately control the characteristic impedance of RF traces to 50 Ω.
- The GND pins adjacent to RF pins should not be designed as thermal relief pads, and should be fully connected to ground.
- The distance between the RF pins and the RF connector should be as short as possible and all the right-angle traces should be changed to curved ones. The recommended trace angle is 135°.
- There should be clearance under the signal pin of the antenna connector or solder joint.
- The reference ground of RF traces should be complete. Meanwhile, adding some ground vias around RF traces and the reference ground could help to improve RF performance. The distance between the ground vias and RF traces should be not less than twice the width of RF signal traces (2 × W).
- Keep RF traces away from interference sources, and avoid intersection and paralleling between traces on adjacent layers.

5.3.1.4. RF Connector Recommendation

If RF connector is used for antenna connection, it is recommended to use the U.FL-R-SMT connector provided by Hirose.

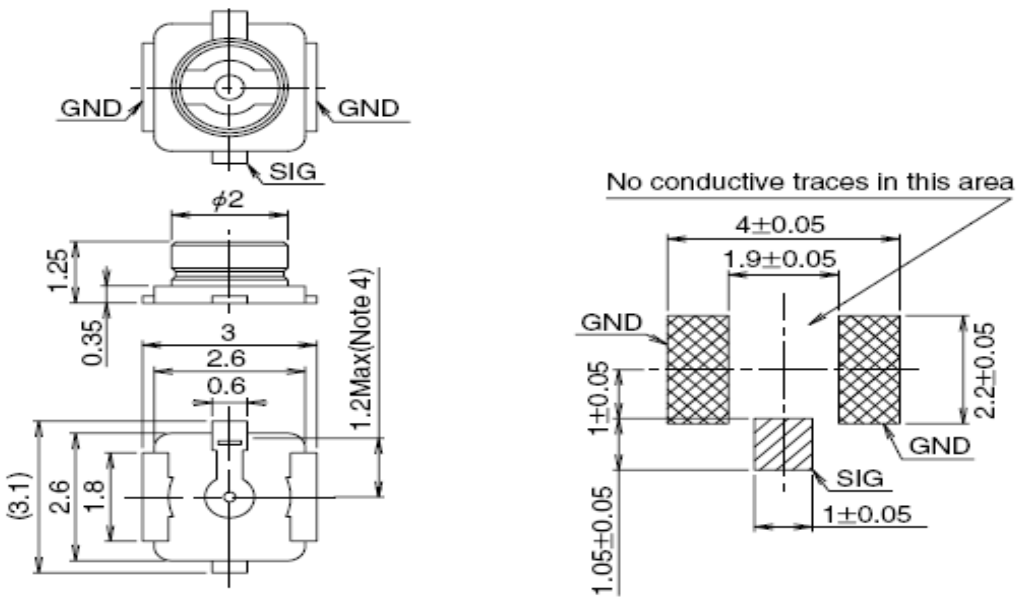

Figure 11: Dimensions of the Receptacle (Unit: mm)

U.FL-LP series mated plugs listed in the following figure can be used to match the U.FL-R-SMT connector.

	U.FL-LP-040	U.FL-LP-066	U.FL-LP(V)-040	U.FL-LP-062	U.FL-LP-088
Part No.	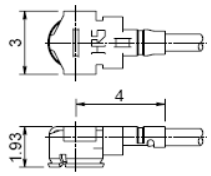	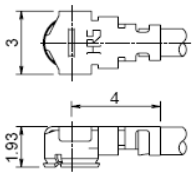	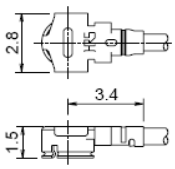	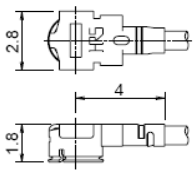	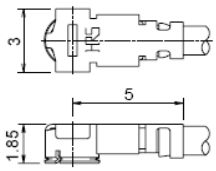
Mated Height	2.5mm Max. (2.4mm Nom.)	2.5mm Max. (2.4mm Nom.)	2.0mm Max. (1.9mm Nom.)	2.4mm Max. (2.3mm Nom.)	2.4mm Max. (2.3mm Nom.)
Applicable cable	Dia. 0.81mm Coaxial cable	Dia. 1.13mm and Dia. 1.32mm Coaxial cable	Dia. 0.81mm Coaxial cable	Dia. 1mm Coaxial cable	Dia. 1.37mm Coaxial cable
Weight (mg)	53.7	59.1	34.8	45.5	71.7
RoHS	YES				

Figure 12: Specifications of Mated Plugs

The following figure describes the space factor of mated connectors.

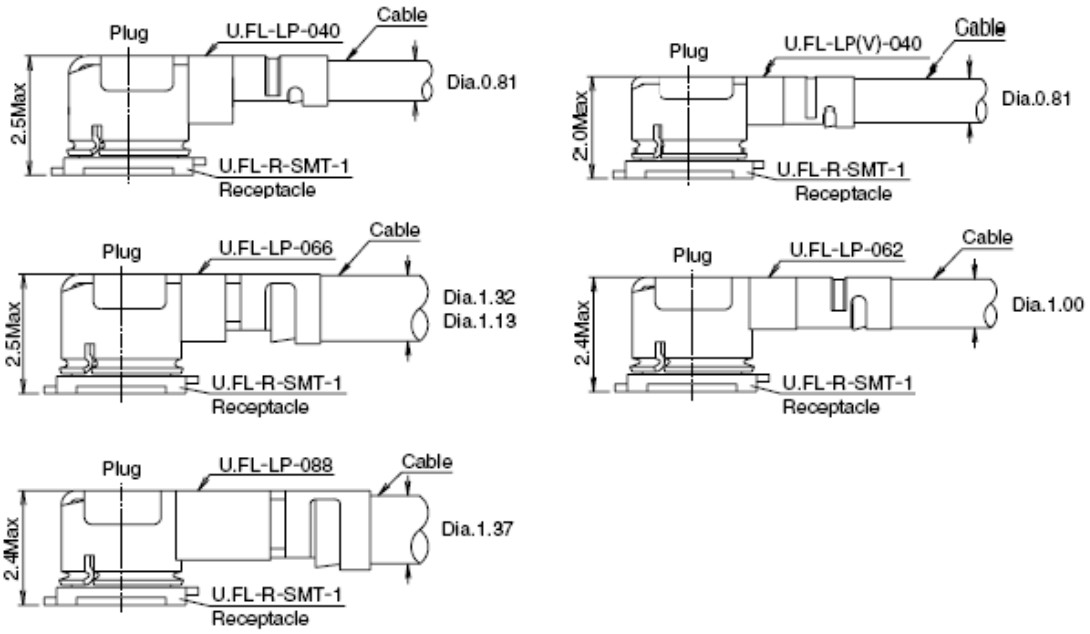

Figure 13: Space Factor of Mated Connectors (Unit: mm)

For more details, please visit http://www.hirose.com.

6 Electrical Characteristics & Reliability

6.1. Absolute Maximum Ratings

Absolute maximum ratings for power supply and voltage on digital and analog pins of the module are listed in the following table.

Table 19: Absolute Maximum Ratings (Unit: V)

Parameter	Min.	Max.
VBAT	-0.3	3.6
Voltage at Digital Pins	-0.3	3.6
Voltage at ADC[1:2]	0	2.4

6.2. Power Supply Ratings

Table 20: Module Power Supply Ratings (Unit: V)

Parameter	Description	Condition	Min.	Typ.	Max.
VBAT	Power supply for the module	The actual input voltages must be kept between the minimum and maximum values.	3.0	3.3	3.6

6.3. Wi-Fi Power Consumption

Table 21: Power Consumption in RF Non-signalling Modes

Condition			I_{VBAT} (Typ.)
2.4 GHz	802.11b	Tx 1 Mbps @ 16 dBm	TBD
		Tx 11 Mbps @ 16 dBm	TBD
	802.11g	Tx 6 Mbps @ 15 dBm	TBD
		Tx 54 Mbps @ 14 dBm	TBD
	802.11n	Tx HT20 MCS 0 @ 14 dBm	TBD
		Tx HT20 MCS 7 @ 13 dBm	TBD

6.4. Digital I/O Characteristics

Table 22: VBAT I/O Characteristics (Unit: V)

Parameter	Description	Min.	Max.
V_{IH}	High-level input voltage	0.7 × VBAT	VBAT + 0.2
V_{IL}	Low-level input voltage	-0.3	0.3 × VBAT
V_{OH}	High-level output voltage	0.9 × VBAT	VBAT
V_{OL}	Low-level output voltage	0	0.1 × VBAT

6.5. ESD Protection

Static electricity occurs naturally and may damage the module. Therefore, applying proper ESD countermeasures and handling methods is imperative. For example, wear anti-static gloves during the development, production, assembly and testing of the module; add ESD protection components to the ESD sensitive interfaces and points in the product design.

Table 23: ESD Characteristics (Unit: kV)

Model	Test Result	Standard
Human Body Model (HBM)	±4	*ANSI/ESDA/JEDEC JS-001-2017*
Charged Device Model (CDM)	±0.25	*ANSI/ESDA/JEDEC JS-002-2018*

7 Mechanical Information

This chapter describes the mechanical dimensions of the module. All dimensions are measured in millimeters (mm), and the dimensional tolerances are ±0.2 mm unless otherwise specified.

7.1. Mechanical Dimensions

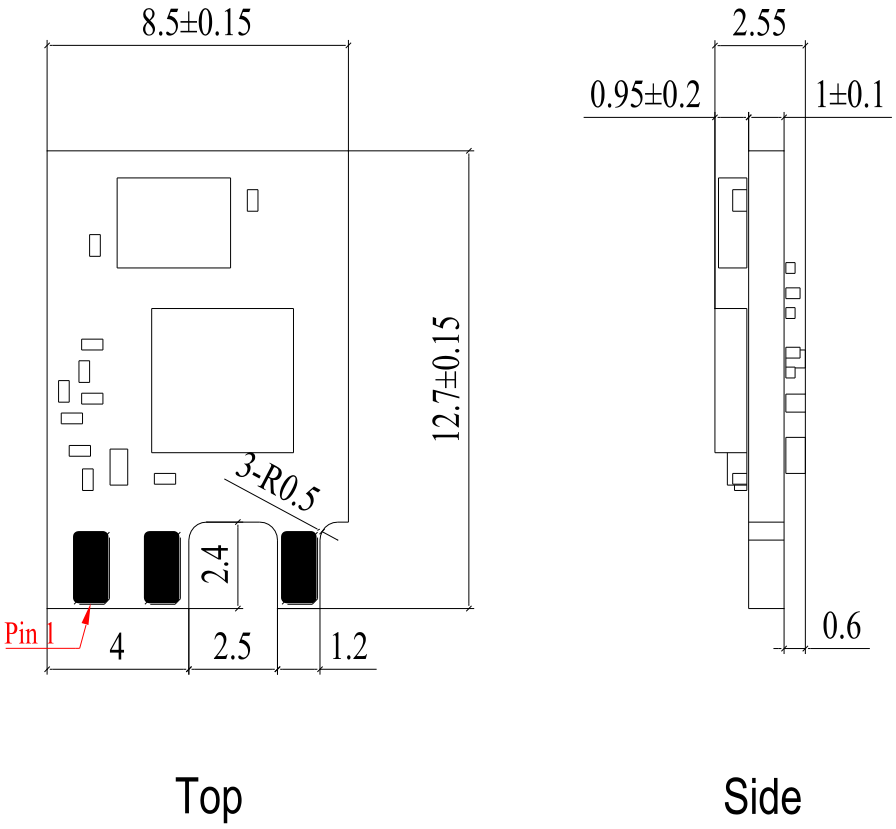

Figure 14: Top and Side Dimensions

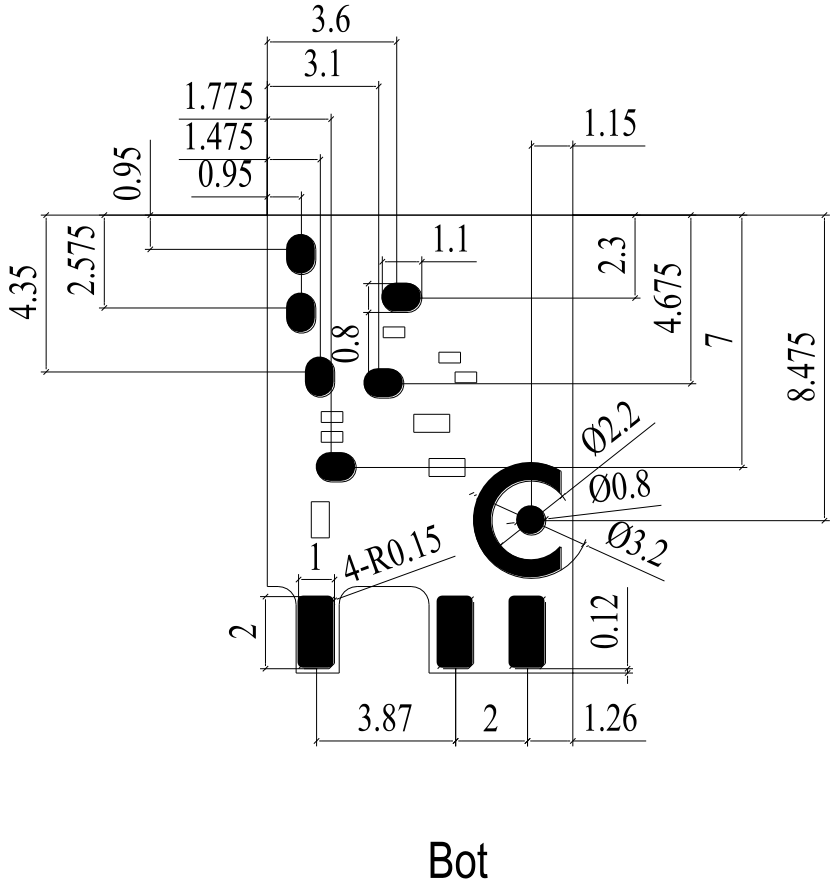

Figure 15: Bottom Dimensions (Bottom View)

NOTE

The package warpage level of the module conforms to the *JEITA ED-7306* standard.

7.2. Recommended Footprint

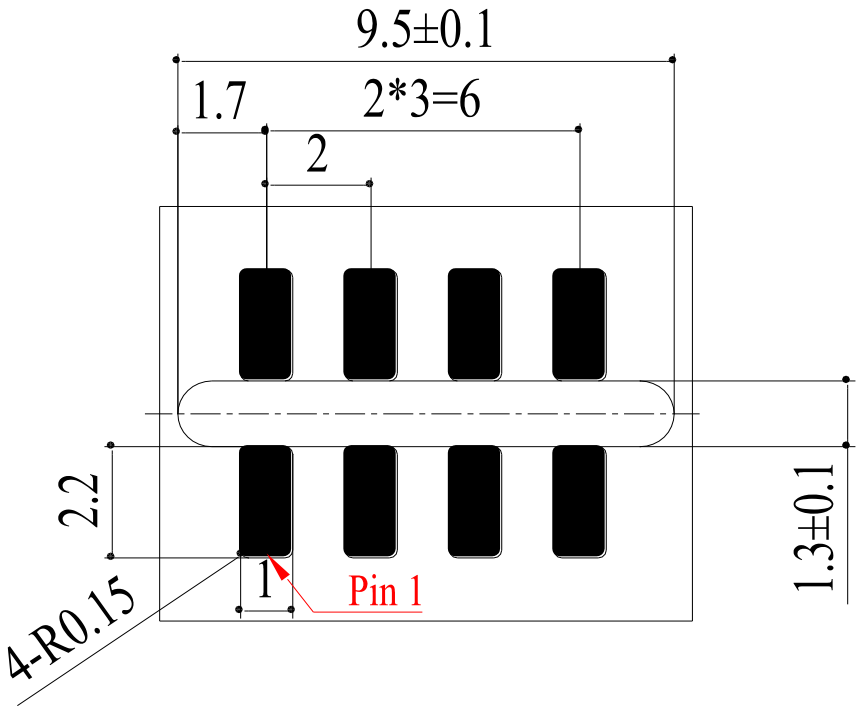

Figure 16: Recommended Footprint

NOTE

Keep at least 3 mm between the module and other components on the motherboard to improve soldering quality and maintenance convenience.

7.3. Top and Bottom Views

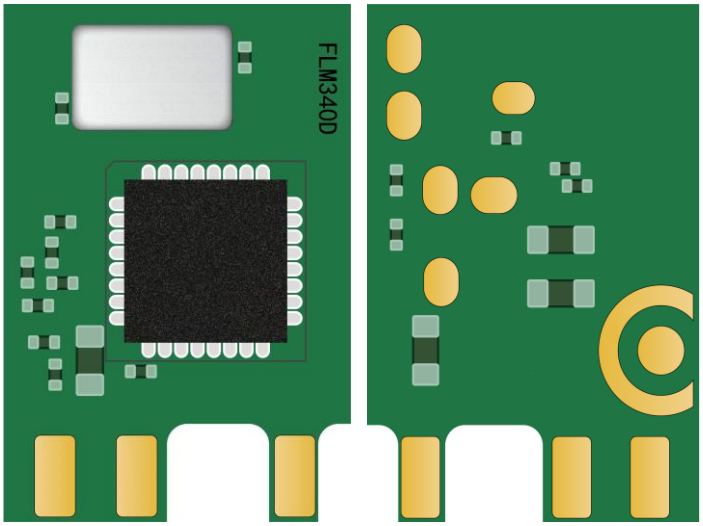

Figure 17: Top and Bottom Views

NOTE

Images above are for illustrative purposes only and may differ from the actual module. For authentic appearance and label, please refer to the module received from Quectel.

8 Storage and Packaging

8.1. Storage Conditions

The module is provided with vacuum-sealed packaging. MSL of the module is rated as 3. The storage requirements are shown below.

1. Recommended Storage Condition: the temperature should be 23 ±5 °C and the relative humidity should be 35–60 %.

2. Shelf life (in a vacuum-sealed packaging): 12 months in Recommended Storage Condition.

3. Floor life: 168 hours [4] in a factory where the temperature is 23 ±5 °C and relative humidity is below 60 %. After the vacuum-sealed packaging is removed, the module must be processed in reflow soldering or other high-temperature operations within 168 hours. Otherwise, the module should be stored in an environment where the relative humidity is less than 10 % (e.g., a dry cabinet).

4. The module should be pre-baked to avoid blistering, cracks and inner-layer separation in PCB under the following circumstances:

   - The module is not stored in Recommended Storage Condition;
   - Violation of the third requirement mentioned above;
   - Vacuum-sealed packaging is broken, or the packaging has been removed for over 24 hours;
   - Before module repairing.

5. If needed, the pre-baking should follow the requirements below:

   - The module should be baked for 8 hours at 120 ±5 °C;
   - The module must be soldered to PCB within 24 hours after the baking, otherwise it should be put in a dry environment such as in a dry cabinet.

NOTE

[4] This floor life is only applicable when the environment conforms to *IPC/JEDEC J-STD-033*. It is recommended to start the solder reflow process within 24 hours after the package is removed if the temperature and moisture do not conform to, or are not sure to conform to *IPC/JEDEC J-STD-033*. Do not unpack the modules in large quantities until they are ready for soldering.

1. To avoid blistering, layer separation and other soldering issues, extended exposure of the module to the air is forbidden.
2. Take out the module from the package and put it on high-temperature-resistant fixtures before baking. If shorter baking time is desired, see *IPC/JEDEC J-STD-033* for the baking procedure.
3. Pay attention to ESD protection, such as wearing anti-static gloves, when touching the modules.

8.2. Packaging Specifications

This chapter describes only the key parameters and process of packaging. All figures below are for reference only. The appearance and structure of the packaging materials are subject to the actual delivery.

The module adopts carrier tape packaging and details are as follow:

8.2.1. Carrier Tape

Carrier tape dimensions are detailed below:

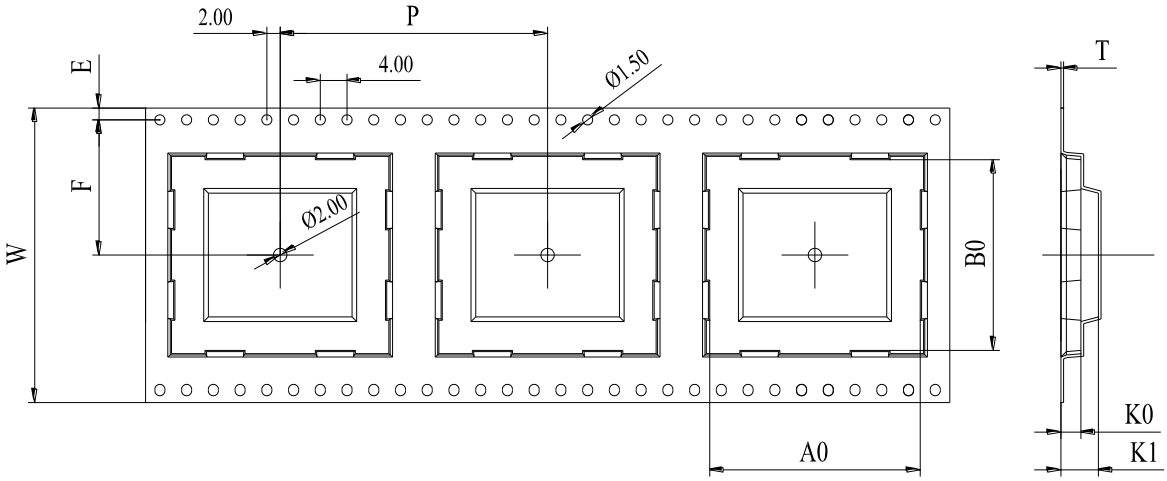

Figure 18: Carrier Tape Dimension Drawing

Table 24: Carrier Tape Dimension Table (Unit: mm)

W	P	T	A0	B0	K0	K1	F	E
32	24	0.4	17.2	15.4	2.9	4.6	14.2	1.75

8.2.2. Plastic Reel

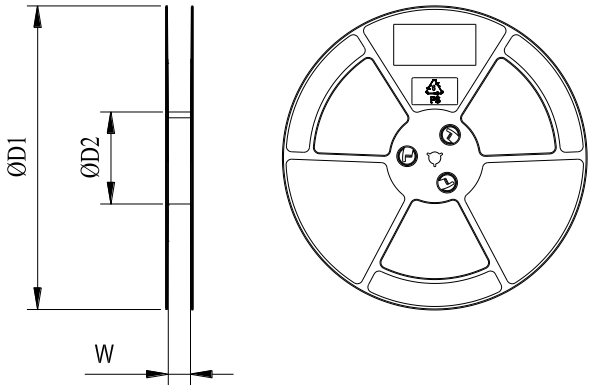

Figure 19: Plastic Reel Dimension Drawing

Table 25: Plastic Reel Dimension Table (Unit: mm)

øD1	øD2	W
330	100	32.5

8.2.3. Packaging Process

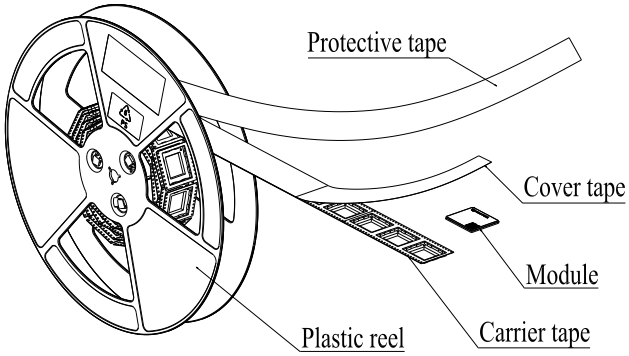

Place the module into the carrier tape and use the cover tape to cover it; then wind the heat-sealed carrier tape to the plastic reel and use the protective tape for protection. 1 plastic reel can load 500 modules.

Place the packaged plastic reel, 1 humidity indicator card and 1 desiccant bag into a vacuum bag, then vacuumize it.

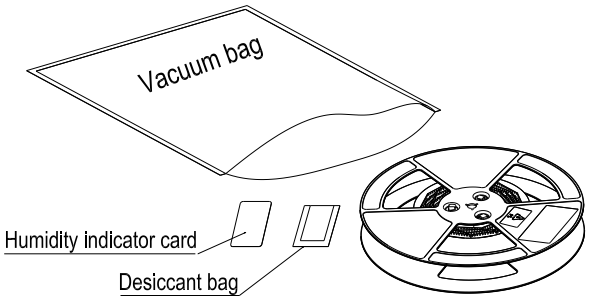

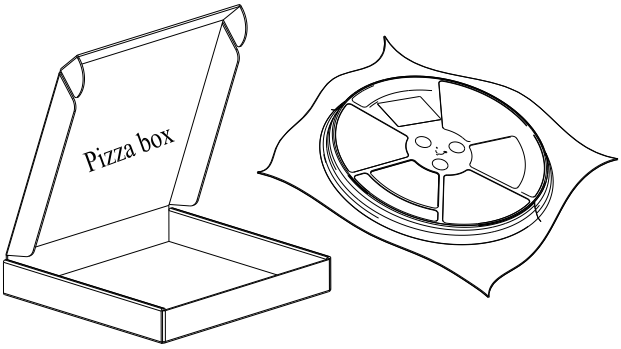

Place the vacuum-packed plastic reel inside the pizza box.

Put 4 packaged pizza boxes into 1 carton box and seal it. 1 carton box can pack 2000 modules.

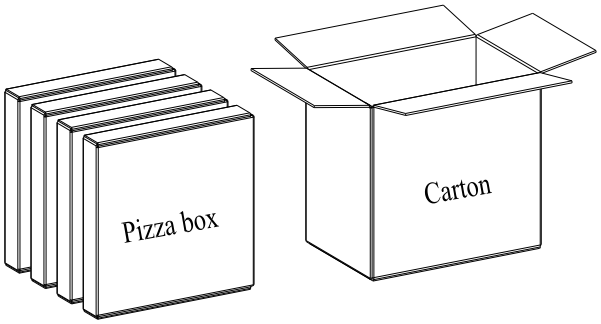

Figure 20: Packaging Process

9 Appendix References

Table 26: Reference Documents

Document Name
[1] Quectel_FLM340D_TE-B_User_Guide

Table 27: Terms and Abbreviations

Abbreviation	Description
ADC	Analog-to-Digital Converter
AP	Access Point
BLE	Bluetooth Low Energy
BPSK	Binary Phase Shift Keying
CCK	Complementary Code Keying
CDM	Charged Device Model
DIP	Dual In-line Package
ESD	Electrostatic Discharge
EVM	Error Vector Magnitude
GFSK	Gauss frequency Shift Keying
GND	Ground
GPIO	General-Purpose Input/Output
HT	High Throughput
I/O	Input/Output
IEEE	Institute of Electrical and Electronics Engineers

IoT	Internet of Things
Mbps	Million Bits Per Second
MCS	Modulation and Coding Scheme
MCU	Microcontroller Unit
MSL	Moisture Sensitivity Levels
OTA	Over-the-Air
PCB	Printed Circuit Board
PWM	Pulse Width Modulation
QAM	Quadrature Amplitude Modulation
QPSK	Quadrature Phase Shift Keying
RAM	Random Access Memory
RF	Radio Frequency
RoHS	Restriction of Hazardous Substances
RTS	Request To Send
STA	Station
TBD	To Be Determined
TVS	Transient Voltage Suppressor
Tx	Transmit
UART	Universal Asynchronous Receiver/Transmitter
V_{IH}	High-level Input Voltage
V_{IL}	Low-level Input Voltage
Vmax	Maximum Voltage
Vmin	Minimum Voltage
Vnom	Nominal Voltage Value
V_{OH}	High-level Output Voltage
V_{OL}	Low-level Output Voltage
VSWR	Voltage Standing Wave Ratio

WPA	Wi-Fi Protected Access

Important Notice to OEM integrators

1. This module is limited to OEM installation ONLY.
2. This module is limited to installation in mobile or fixed applications, according to Part 2.1091(b).
3. The separate approval is required for all other operating configurations, including portable configurations with respect to Part 2.1093 and different antenna configurations
4. For FCC Part 15.31 (h) and (k): The host manufacturer is responsible for additional testing to verify compliance as a composite system. When testing the host device for compliance with Part
15 Subpart B, the host manufacturer is required to show compliance with Part 15 Subpart B while the transmitter module(s) are installed and operating. The modules should be transmitting and the evaluation should confirm that the module's intentional emissions are compliant (i.e. fundamental and out of band emissions). The host manufacturer must verify that there are no additional unintentional emissions other than what is permitted in Part 15 Subpart B or emissions are complaint with the transmitter(s) rule(s).
The Grantee will provide guidance to the host manufacturer for Part 15 B requirements if needed.

Important Note

notice that any deviation(s) from the defined parameters of the antenna trace, as described by the instructions, require that the host product manufacturer must notify to XXXX that they wish to change the antenna trace design. In this case, a Class II permissive change application is required to be filed by the USI, or the host manufacturer can take responsibility through the change in FCC ID (XMR2023FLM340D) procedure followed by a Class II permissive change application.

End Product Labeling

When the module is installed in the host device, the FCC/IC ID label must be visible through a window on the final device or it must be visible when an access panel, door or cover is easily re-moved. If not, a second label must be placed on the outside of the final device that contains the following text: “Contains FCC ID: XMR2023FLM340D”
“Contains IC: 10224A-2023FLM340D “
The FCC ID/IC ID can be used only when all FCC/IC compliance requirements are met.

Antenna Installation

(1) The antenna must be installed such that 20 cm is maintained between the antenna and users,
(2) The transmitter module may not be co-located with any other transmitter or antenna.
(3) Only antennas of the same type and with equal or less gains as shown below may be used with this module. Other types of antennas and/or higher gain antennas may require additional authorization for operation.

Antenna type	2.4GHz band Peak Gain (dBi)	5.2GHz band Peak Gain (dBi)	5.3GHz band Peak Gain (dBi)	5.5GHz band Peak Gain (dBi)	5.8GHz band Peak Gain (dBi)
Dipole	0.73	/	/	/	/

In the event that these conditions cannot be met (for example certain laptop configurations or co-location with another transmitter), then the FCC/IC authorization is no longer considered valid and the FCC ID/IC ID cannot be used on the final product. In these circumstances, the OEM integrator will be responsible for re-evaluating the end product (including the transmitter) and obtaining a separate FCC/IC authorization.

Manual Information to the End User

The OEM integrator has to be aware not to provide information to the end user regarding how to install or remove this RF module in the user's manual of the end product which integrates this module. The end user manual shall include all required regulatory information/warning as show in this manual.

Federal Communication Commission Interference Statement

This device complies with Part 15 of the FCC Rules. Operation is subject to the following two conditions: (1) This device may not cause harmful interference, and (2) this device must accept any interference received, including interference that may cause undesired operation.
This equipment has been tested and found to comply with the limits for a Class B digital device, pursuant to Part 15 of the FCC Rules. These limits are designed to provide reasonable protection against harmful interference in a residential installation. This equipment generates, uses and can radiate radio frequency energy and, if not installed and used in accordance with the instructions, may cause harmful interference to radio communications. However, there is no guarantee that interference will not occur in a particular installation. If this equipment does cause harmful interference to radio or television reception, which can be determined by turning the equipment off and on, the user is encouraged to try to correct the interference by one of the following measures:
- Reorient or relocate the receiving antenna.
- Increase the separation between the equipment and receiver.
- Connect the equipment into an outlet on a circuit different from that to which the receiver is connected.
- Consult the dealer or an experienced radio/TV technician for help.

Any changes or modifications not expressly approved by the party responsible for compliance could void the user's authority to operate this equipment. This transmitter must not be co-located or operating in conjunction with any other antenna or transmitter.

List of applicable FCC rules

This module has been tested and found to comply with 15.247 and 15.407 requirements for Modular Approval.
The modular transmitter is only FCC authorized for the specific rule parts (i.e., FCC transmitter rules) listed on the grant, and that the host product manufacturer is responsible for compliance to any other FCC rules that apply to the host not covered by the modular transmitter grant of certification. If the grantee markets their product as being Part 15 Subpart B compliant (when it also contains unintentional-radiator digital circuity), then the grantee shall provide a notice stating that the final host product still requires Part 15 Subpart B compliance testing with the modular transmitter installed.

This device is intended only for OEM integrators under the following conditions:

(For module device use)

1) The antenna must be installed such that 20 cm is maintained between the antenna and users, and
2) The transmitter module may not be co-located with any other transmitter or antenna.
As long as 2 conditions above are met, further transmitter test will not be required. However, the OEM integrator is still responsible for testing their end-product for any additional compliance requirements required with this module installed.

Radiation Exposure Statement

This equipment complies with FCC radiation exposure limits set forth for an uncontrolled environment. This equipment should be installed and operated with minimum distance 20 cm between the radiator & your body.

Limited Module Procedures

Applicable. The module compliance with FCC requirements based on Limit module procedure as no shielding cover included. Any installation or operation that does not follow this manual will require further evaluation.

IC

Industry Canada Statement

This device complies with Industry Canada's licence-exempt RSSs. Operation is subject to the following two conditions:
(1) This device may not cause interference; and
(2) This device must accept any interference, including interference that may cause undesired operation of the device.

Le présent appareil est conforme aux CNR d'Industrie Canada applicables aux appareils radio exempts de licence. L'exploitation est autorisée aux deux conditions suivantes:
(1) l'appareil ne doit pas produire de brouillage, et
(2) l'utilisateur de l'appareil doit accepter tout brouillage radioélectrique subi, même si le brouillage est susceptible d'en compromettre le fonctionnement."

Radiation Exposure Statement

This equipment complies with IC radiation exposure limits set forth for an uncontrolled environment. This equipment should be installed and operated with minimum distance 20 cm between the radiator & your body.

Déclaration d'exposition aux radiations:

Cet équipement est conforme aux limites d'exposition aux rayonnements ISED établies pour un environnement non contrôlé. Cet équipement doit être installé et utilisé avec un minimum de 20 cm de distance entre la source de rayonnement et votre corps.

par la technologie.

This device is intended only for OEM integrators under the following conditions: (For module device use)

1) The antenna must be installed such that 20 cm is maintained between the antenna and users, and
2) The transmitter module may not be co-located with any other transmitter or antenna.
As long as 2 conditions above are met, further transmitter test will not be required. However, the OEM integrator is still responsible for testing their end-product for any additional compliance requirements required with this module installed.

Cet appareil est conçu uniquement pour les intégrateurs OEM dans les conditions suivantes: (Pour utilisation de dispositif module)

1) L'antenne doit être installée de telle sorte qu'une distance de 20 cm est respectée entre l'antenne et les utilisateurs, et
2) Le module émetteur peut ne pas être coïmplanté avec un autre émetteur ou antenne.

Tant que les 2 conditions ci-dessus sont remplies, des essais supplémentaires sur l'émetteur ne seront pas nécessaires. Toutefois, l'intégrateur OEM est toujours responsable des essais sur son produit final pour toutes exigences de conformité supplémentaires requis pour ce module installé.

IMPORTANT NOTE:

In the event that these conditions can not be met (for example certain laptop configurations or colocation with another transmitter), then the Canada authorization is no longer considered valid and the IC ID can not be used on the final product. In these circumstances, the OEM integrator will be responsible for re-evaluating the end product (including the transmitter) and obtaining a separate Canada authorization.

NOTE IMPORTANTE:

Dans le cas où ces conditions ne peuvent être satisfaites (par exemple pour certaines configurations d'ordinateur portable ou de certaines co-localisation avec un autre émetteur), l'autorisation du Canada n'est plus considéré comme valide et l'ID IC ne peut pas être utilisé sur le produit final. Dans ces circonstances, l'intégrateur OEM sera chargé de réévaluer le produit final (y compris l'émetteur) et l'obtention d'une autorisation distincte au Canada.

End Product Labeling

This transmitter module is authorized only for use in device where the antenna may be installed such that 20 cm may be maintained between the antenna and users. The final end product must be labeled in a visible area with the following: “Contains IC:10224A-2023FLM340D”.

Plaque signalétique du produit final

Ce module émetteur est autorisé uniquement pour une utilisation dans un dispositif où l'antenne peut être installée de telle sorte qu'une distance de 20cm peut être maintenue entre l'antenne et les utilisateurs. Le produit final doit être étiqueté dans un endroit visible avec l'inscription suivante:
"Contient des IC: 10224A-2023FLM340D ".

Manual Information To the End User

The OEM integrator has to be aware not to provide information to the end user regarding how to install or remove this RF module in the user’s manual of the end product which integrates this module.
The end user manual shall include all required regulatory information/warning as show in this

manual.

Manuel d'information à l'utilisateur final

L'intégrateur OEM doit être conscient de ne pas fournir des informations à l'utilisateur final quant à la façon d'installer ou de supprimer ce module RF dans le manuel de l'utilisateur du produit final qui intègre ce module.

Le manuel de l'utilisateur final doit inclure toutes les informations réglementaires requises et avertissements comme indiqué dans ce manuel.

Limited Module Procedures

Applicable. The module compliance with FCC requirements based on Limit module procedure as no shielding cover included. Any installation or operation that does not follow this manual will require further evaluation.

Procédures modulaires limitées

Applicable. La conformité du module aux exigences de la FCC basées sur la procédure du module limite comme pas de couverture de blindage. Inclus. Toute installation ou opération qui ne respecte pas ce manuel nécessitera une évaluation plus approfondie.