TEST REPORT

Applicant:	Quectel Wireless Solutions Co., Ltd.
EUT Description:	SBC(Single-Board Computers)
Model:	QSM560DR-WF
Brand:	QUECTEL
FCC ID:	XMR2023SG560DWF
Standards:	FCC 47 CFR Part 15 Subpart C
Date of Receipt:	2025/10/22
Date of Test:	2025/10/22 to 2026/03/06
Date of Issue:	2026/03/17

TOWE. tested the above equipment in accordance with the requirements set forth in the above standards. The test results show that the equipment tested is capable of demonstrating compliance with the requirements as documented in this report.

the results documented in this report apply only to the tested sample, under the conditions and modes of operation as described herein. It is the manufacturer's responsibility to assure that additional production units of the model are manufactured with identical electrical and mechanical components. All sample tested were in good operating condition throughout the entire test program. Measurement Uncertainties are published for informational purposes only and were not taken into account unless noted otherwise. without written approval of TOWE, the test report shall not be reproduced except in full.

ACCREDITED
CERTIFICATE #7088.01

Jim Huang
Approved By:

Carey Chen
Reviewed By:

All rights reserved. Unless otherwise specified, no part of this report may be reproduced or utilized in any part, form or by any means, electronic or mechanical, including photocopying and microfilm, without permission in writing from TOWE.

Revision History

Rev.	Issue Date	Description	Revised by
01	2026/03/17	Original	Carey Chen

All rights reserved. Unless otherwise specified, no part of this report may be reproduced or utilized in any part, form or by any means, electronic or mechanical, including photocopying and microfilm, without permission in writing from TOWE.

Summary of Test Results

Clause	FCC Part	Test Items	Result
4.1	§15.203/15.247(b)	Antenna Requirement	PASS
4.2	§15.207	AC Power Line Conducted Emission	PASS
4.3	§15.247 (b)(3)	Output Power	Reference report PD20230213RF02
4.4	§15.247 (a)(2)	Occupied Bandwidth	
4.5	§15.247 (e)	Power Spectral Density	
4.6	§15.247(d)	Band Edge for Conducted Emissions	
4.7	§15.247(d)	Spurious RF Conducted Emissions	
4.8	§15.205 §15.209	Radiated Spurious emissions and Band Edge	PASS
Test Method: ANSI C63.10-2020+Cor. 1-2023+C63.10a-2024 + Errata to C63.10a-2024, KDB 558074 D01 15.247 Mesa Guidance v05r02. Remark: Pass is EUT meets standard requirements.			

Remark:

In this report the worst data of AC Power Line Conducted Emission, Radiated Spurious emissions and Band Edge were spot checked, and the other data please refer to the previous report with report number PD20230213RF02 (FCC ID: XMR2023SG560DWF) issued by Hefei Panwin Technology Co., Ltd.

All rights reserved. Unless otherwise specified, no part of this report may be reproduced or utilized in any part, form or by any means, electronic or mechanical, including photocopying and microfilm, without permission in writing from TOWE.

Table of Contents

1 General Description 5
1.1 Lab Information 5
1.1.1 Testing Location 5
1.1.2 Test Facility / Accreditations 5
1.2 Client Information 5
1.2.1 Applicant 5
1.2.2 Manufacturer 5
1.3 Product Information 6
2 Test Configuration 7
2.1 Test Channel 7
2.2 Worst-case configuration and Mode 8
2.3 Support Unit used in test 8
2.4 Test Environment 8
2.5 Test RF Cable 8
2.6 Modifications 8
2.7 Test Setup Diagram 9
2.7.1 Radiated Configuration 9
3 Equipment and Measurement Uncertainty 10
3.1 Test Equipment List 10
3.2 Measurement Uncertainty 11
4 Test Results 12
4.1 Antenna Requirement 12
4.2 AC Power Line Conducted Emissions 13
4.3 Radiated Spurious Emissions and Band Edge 16
5 Test Setup Photos 18
Appendix 19

All rights reserved. Unless otherwise specified, no part of this report may be reproduced or utilized in any part, form or by any means, electronic or mechanical, including photocopying and microfilm, without permission in writing from TOWE.

1 General Description

1.1 Lab Information

1.1.1 Testing Location

These measurements tests were conducted at the Sushi TOWE Wireless Testing(Shenzhen) Co., Ltd. facility located at F401 and F101, Building E, Hongwei Industrial Zone, Liuxian 3rd Road, Bao'an District, Shenzhen, China. The measurement facility is compliant with the test site requirements specified in ANSI C63.4-2014
Tel.: +86-755-27212361
Contact Email: info@towewireless.com

1.1.2 Test Facility / Accreditations

A2LA (Certificate Number: 7088.01)
This laboratory is accredited in accordance with the recognized International Standard ISO/IEC 17025:2017 General requirements for the competence of testing and calibration laboratories. This accreditation demonstrates technical competence for a defined scope and the operation of a laboratory quality management system (refer to joint ISO-ILAC-IAF Communiqué dated April 2017).

FCC Designation No.: CN1353
Sushi TOWE Wireless Testing(Shenzhen) Co., Ltd. has been recognized as an accredited testing laboratory.
Test Firm Registration Number: 684095
Designation Number: CN1353.

ISED CAB identifier: CN0152
Sushi TOWE Wireless Testing(Shenzhen) Co., Ltd. has been recognized by ISED as an accredited testing laboratory.
CAB identifier: CN0152
Company Number: 31000

1.2 Client Information

1.2.1 Applicant

Applicant:	Quectel Wireless Solutions Co., Ltd.
Address:	No. 8 Waipojing Road, Sijing Town, Songjiang District, Shanghai 201601, China

1.2.2 Manufacturer

Manufacturer:	Quectel Wireless Solutions Co., Ltd.
Address:	No. 8 Waipojing Road, Sijing Town, Songjiang District, Shanghai 201601, China

All rights reserved. Unless otherwise specified, no part of this report may be reproduced or utilized in any part, form or by any means, electronic or mechanical, including photocopying and microfilm, without permission in writing from TOWE.

1.3 Product Information

EUT Description:	SBC(Single-Board Computers)	
Model No.:	QSM560DR-WF	
Brand:	QUECTEL	
Hardware Version:	R1.5	
Software Version:	SG560DWFPAR60A05	
SN:	P1Y25DH44001107	
Bluetooth version:	Bluetooth V4.2	
Support Mode:	☒LE 1M PHY:1Mbps	☒LE 2M PHY:2Mbps
Modulation Type:	GFSK	
Frequency Range:	2400 ~ 2483.5MHz	
Channel Frequency:	2402 ~ 2480MHz	
Channel Number:	40	
Antenna Type:	☒ External, ☐ Integrated	
Antenna Gain:	Ant1 (dBi)	
	0.2	
Remark: The above EUT's information was declared by applicant, please refer to the specifications or user's manual for more detailed description.		

All rights reserved. Unless otherwise specified, no part of this report may be reproduced or utilized in any part, form or by any means, electronic or mechanical, including photocopying and microfilm, without permission in writing from TOWE.

2 Test Configuration

2.1 Test Channel

Operation Frequency of each channel for GFSK							
Channel	**Frequency**	**Channel**	**Frequency**	**Channel**	**Frequency**	**Channel**	**Frequency**
0	2402MHz	10	2422MHz	20	2442MHz	30	2462MHz
1	2404MHz	11	2424MHz	21	2444MHz	31	2464MHz
2	2406MHz	12	2426MHz	22	2446MHz	32	2466MHz
3	2408MHz	13	2428MHz	23	2448MHz	33	2468MHz
4	2410MHz	14	2430MHz	24	2450MHz	34	2470MHz
5	2412MHz	15	2432MHz	25	2452MHz	35	2472MHz
6	2414MHz	16	2434MHz	26	2454MHz	36	2474MHz
7	2416MHz	17	2436MHz	27	2456MHz	37	2476MHz
8	2418MHz	18	2438MHz	28	2458MHz	38	2478MHz
9	2420MHz	19	2440MHz	29	2460MHz	39	2480MHz

Remark:
In section 15.31(m), regards to the operating frequency range over 10 MHz, the Lowest frequency, the middle frequency, and the highest frequency of channel were selected to perform the test, and the selected channel see below:

Test Channel	Test Frequency
The Lowest channel(CH0)	2402MHz
The Middle channel(CH19)	2440MHz
The Highest channel(CH39)	2480MHz

All rights reserved. Unless otherwise specified, no part of this report may be reproduced or utilized in any part, form or by any means, electronic or mechanical, including photocopying and microfilm, without permission in writing from TOWE.

2.2 Worst-case configuration and Mode

Modulation Type	LE 1M PHY	LE 2M PHY
Transmitting mode	Keep the EUT was programmed to be in continuously transmitting mode	
Normal Link	Keep the EUT operation to normal function.	

2.3 Support Unit used in test

The EUT has been tested as an independent unit.

2.4 Test Environment

Temperature:	Normal: 15℃ ~ 35℃
Humidity:	45 ~ 56 % RH Ambient
Voltage:	DC 12V
AC Voltage:	AC 120V/60Hz for Conducted Emissions
Remark: The testing environment is within the scope of the EUT user manual and meets the requirements of the standard testing environment.	

2.5 Test RF Cable

For all conducted test items: The offset level is set spectrum analyzer to compensate the RF cable loss and attenuator factor between RF conducted output port and spectrum analyzer. With the offset compensation, the spectrum analyzer reading level will be exactly the RF output level.
The spectrum analyzer offset is derived from RF cable loss and attenuator factor.
Offset = RF cable loss + attenuator factor.

2.6 Modifications

No modifications were made during testing.

All rights reserved. Unless otherwise specified, no part of this report may be reproduced or utilized in any part, form or by any means, electronic or mechanical, including photocopying and microfilm, without permission in writing from TOWE.

2.7 Test Setup Diagram

2.7.1 Radiated Configuration

Setup 1

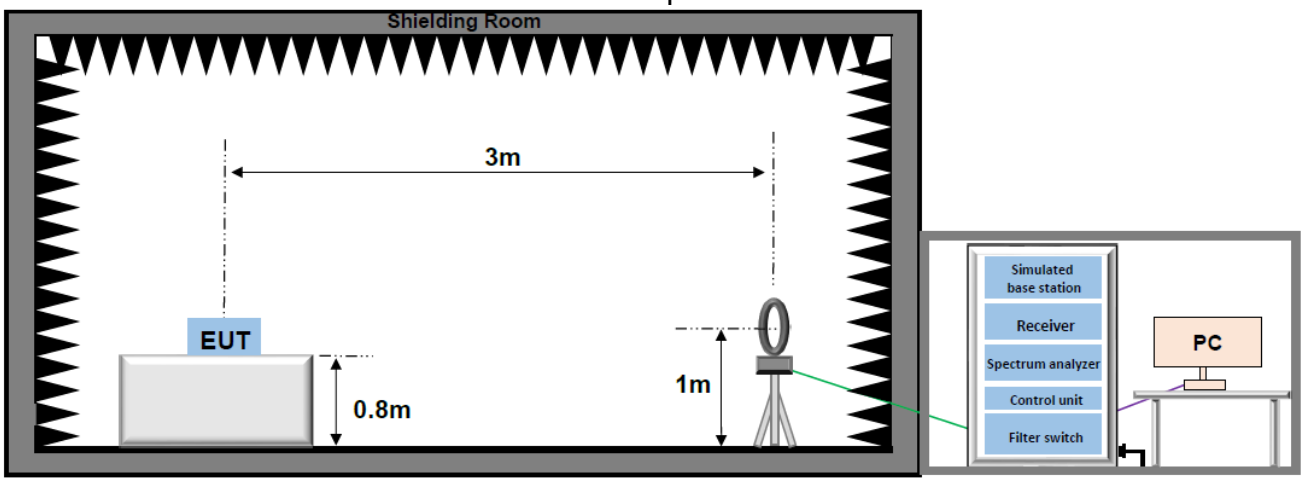

Setup 2

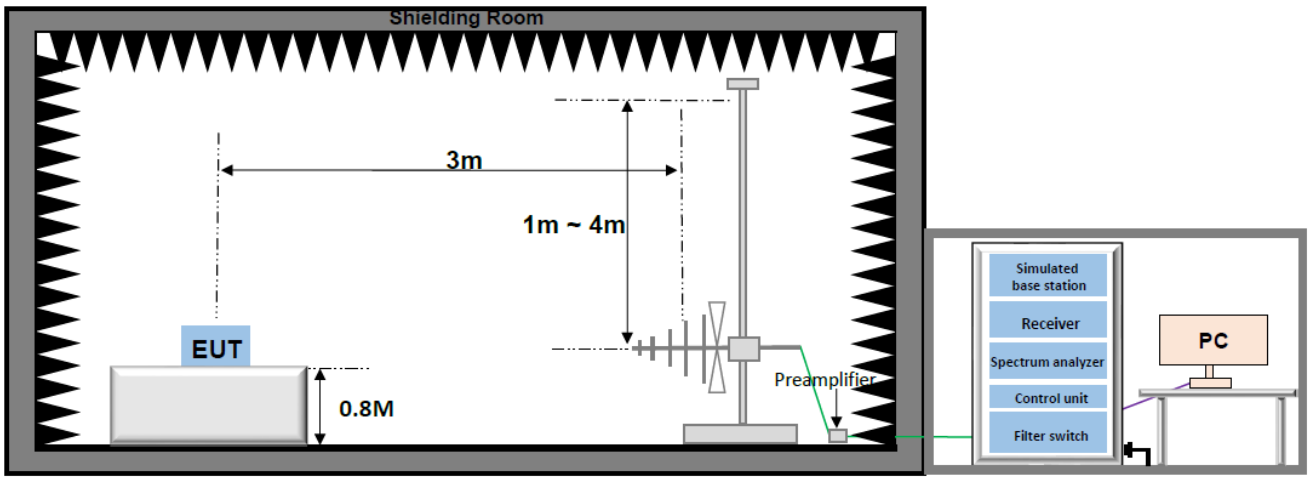

Setup 3

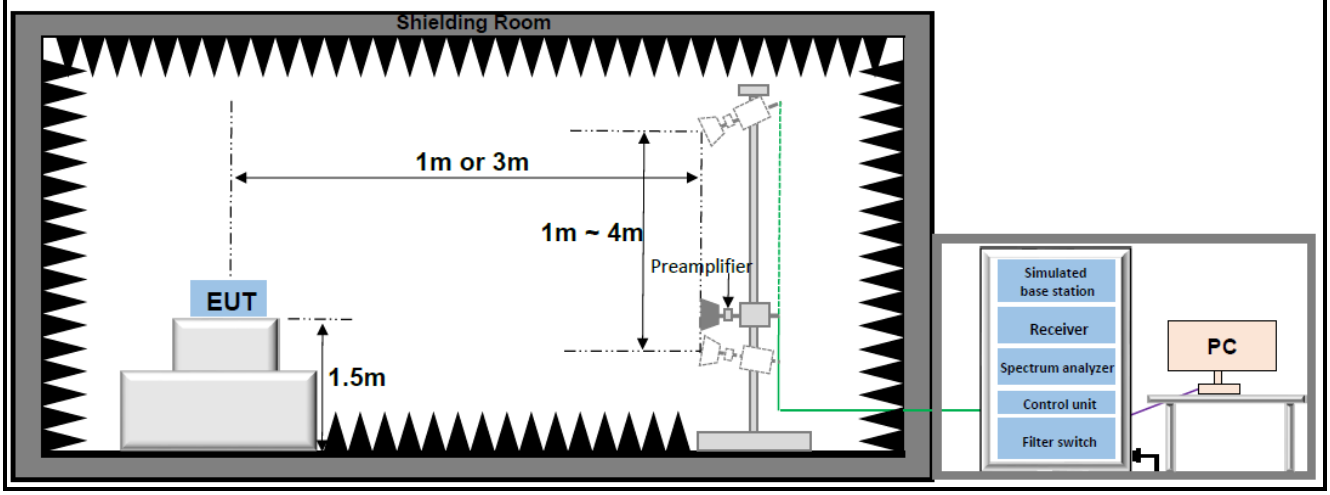

All rights reserved. Unless otherwise specified, no part of this report may be reproduced or utilized in any part, form or by any means, electronic or mechanical, including photocopying and microfilm, without permission in writing from TOWE.

3 Equipment and Measurement Uncertainty

All test and measuring equipment utilized to perform the tests documented in this report are calibrated on a regular basis, whichever is less, and where applicable is traceable to recognized national standards.

3.1 Test Equipment List

Radiated Emission					
Description	**Manufacturer**	**Model**	**S.N.**	**Last Due**	**Cal Due**
Biconic Logarithmic Periodic Antennas	Schwarzbeck	VULB9163	1643	2023/06/25	2026/06/24
Double-Ridged Horn Antennas	Schwarzbeck	BBHA 9120D	2809	2023/06/25	2026/06/24
Broad-Band Horn Antenna	Schwarzbeck	BBHA 9170	1290	2023/06/25	2026/06/24
Loop Antenna	Schwarzbeck	FMZB 1519C	1519C-028	2023/06/29	2026/06/28
Signal Analyzer	Keysight	N9020A	MY49100252	2025/03/11	2026/03/10
EXA Signal Analyzer, Multi-touch	Keysight	N9010B	MY63440541	2025/05/29	2026/05/28
Wideband Radio Communication Tester	R&S	CMW500	150645	2025/03/11	2026/03/10
Low Noise Amplifier	Tonscend	TAP9K3G40	AP23A8060273	2025/03/11	2027/03/10
Low Noise Amplifier	Tonscend	TAP01018050	AP22G806258	2025/03/11	2027/03/10
Low Noise Amplifier	Tonscend	TAP18040048	AP22G806247	2025/03/11	2027/03/10
Hygrometer	BINGYU	HTC-1	N/A	2025/07/25	2026/07/24
Band Reject Filter Group	Townshend	JS0806-F	23A806F0652	N/A	N/A
Test Software	Tonscend	TS+	Version: 5.0.0	N/A	N/A

Conducted Emission					
Description	**Manufacturer**	**Model**	**Serial No.**	**Last Cal**	**Cal Due**
EMI Tester Receiver	Rohde & Schwarz	ESR3	103108	2025/05/29	2026/05/28
LISN*	Rohde & Schwarz	ENV 216	102836	2025/01/04	2026/01/03
				2026/01/19	2027/01/18
Test Software	Rohde & Schwarz	ELEKTRA	Version: 4.61	N/A	N/A
*There was no testing between 2026/01/03~2026/01/19.					

All rights reserved. Unless otherwise specified, no part of this report may be reproduced or utilized in any part, form or by any means, electronic or mechanical, including photocopying and microfilm, without permission in writing from TOWE.

3.2 Measurement Uncertainty

Parameter	U_{lab}
Conducted Emissions(150kHz~30MHz)	2.43dB
Radiated Emissions(9kHz~30MHz)	2.40dB
Radiated Emissions(30MHz~1000MHz)	4.66dB
Radiated Emissions(1GHz~18GHz)	5.42dB
Radiated Emissions(18GHz~40GHz)	5.46dB

Uncertainty figures are valid to a confidence level of 95%

All rights reserved. Unless otherwise specified, no part of this report may be reproduced or utilized in any part, form or by any means, electronic or mechanical, including photocopying and microfilm, without permission in writing from TOWE.

4 Test Results

4.1 Antenna Requirement

Standard Applicable:	47 CFR Part 15C Section 15.203 /247(b)
15.203 requirement: An intentional radiator shall be designed to ensure that no antenna other than that furnished by the responsible party shall be used with the device. The use of a permanently attached antenna or of an antenna that uses a unique coupling to the intentional radiator, the manufacturer may design the unit so that a broken antenna can be replaced by the user, but the use of a standard antenna jack or electrical connector is prohibited. 15.247(b) (4) requirement: The conducted output power limit specified in paragraph (b) of this section is based on the use of antennas with directional gains that do not exceed 6 dBi. Except as shown in paragraph (c) of this section, if transmitting antennas of directional gain greater than 6 dBi are used, the conducted output power from the intentional radiator shall be reduced below the stated values in paragraphs (b)(1), (b)(2), and (b)(3) of this section, as appropriate, by the amount in dB that the directional gain of the antenna exceeds 6 dBi.	
The antenna gain and type as provided by the manufacturer are as follows: The antenna Type is Integrated. With Antenna gain is 0.2dBi(Ant1). Antenna Anti-Replacement Construction: An embedded-in antenna design is used.	

All rights reserved. Unless otherwise specified, no part of this report may be reproduced or utilized in any part, form or by any means, electronic or mechanical, including photocopying and microfilm, without permission in writing from TOWE.

4.2 AC Power Line Conducted Emissions

Limits

Frequency range (MHz)	Limit (dBμV)	
	Quasi-peak	Average
0.15-0.5	66 to 56*	56 to 46*
0.5-5	56	46
5-30	60	50
* Decreases with the logarithm of the frequency.		

Test Procedure

ANSI C63.10-2020+Cor. 1-2023+C63.10a-2024 + Errata to C63.10a-2024, Section 6.2.

Test Settings

1. The EUT was connected to AC power source through a LISN 1 (Line Impedance Stabilization Network) which provides a 50Ω/50μH + 5Ω linear impedance. The power cables of all other units of the EUT were connected to a second LISN 2, which was bonded to the ground reference plane in the same way as the LISN 1 for the unit being measured. A multiple socket outlet strip was used to connect multiple power cables to a single LISN provided the rating of the LISN was not exceeded.
2. The tabletop EUT was placed upon a non-metallic table 0.8m above the ground reference plane. And for floor-standing arrangement, the EUT was placed on the horizontal ground reference plane.
3. The test was performed with a vertical ground reference plane. The rear of the EUT shall be 0.4 m from the vertical ground reference plane. The vertical ground reference plane was bonded to the horizontal ground reference plane. The LISN 1 was placed 0.8 m from the boundary of the unit under test and bonded to a ground reference plane for LISNs mounted on top of the ground reference plane. This distance was between the closest points of the LISN 1 and the EUT. All other units of the EUT and associated equipment was at least 0.8 m from the LISN 2.
4. The receiver is set to a resolution bandwidth of 9kHz. Peak detection s used netless otherwise noted as quasi-peak or average.
5. AC Power Line Conducted Emissions, the channel with the highest output power was tested.
6. Both sides of AC line are checked for maximum conducted interference. In order to find the maximum emission, the relative positions of equipment and all of the interface cables must be changed according to ANSI C63.10 on conducted measurement.

Test Setup

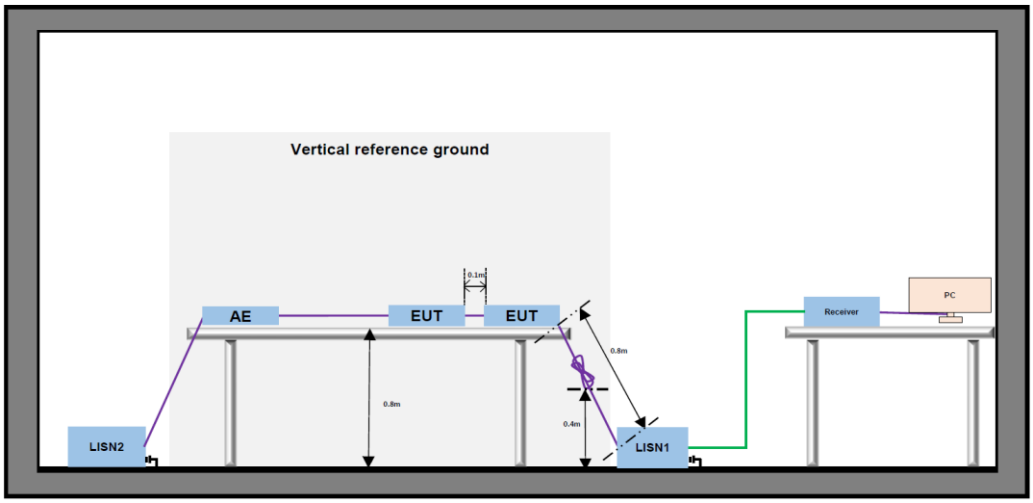

Measuring Instruments

The measuring equipment is listed in the section 3.1 of this test report.

All rights reserved. Unless otherwise specified, no part of this report may be reproduced or utilized in any part, form or by any means, electronic or mechanical, including photocopying and microfilm, without permission in writing from TOWE.

Test Result:

Test mode:	BLE		
Test Voltage:	AC 120V / 60Hz	Phase:	Line

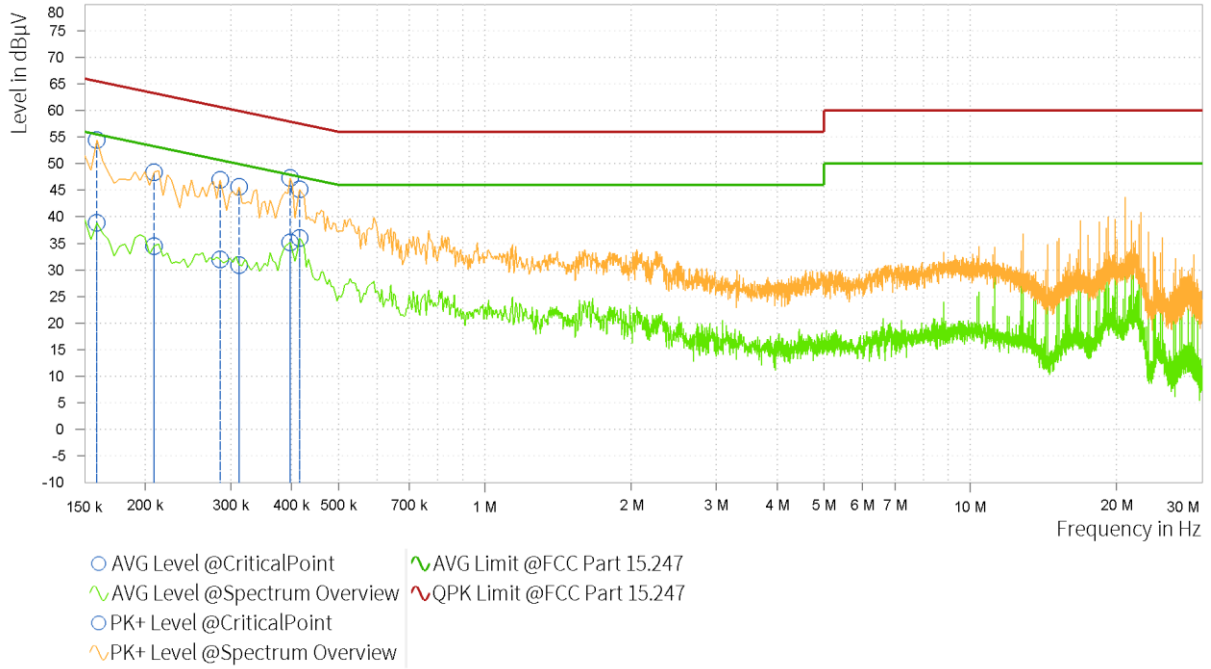

Rg	Frequency [MHz]	PK+ Level [dBµV]	PK+: QPK Limit [dBµV]	PK+ Margin [dB]	AVG Level [dBµV]	AVG Limit [dBµV]	AVG Margin [dB]	Correction [dB]	Line
1	0.159	54.49	65.52	11.03	38.83	55.52	16.69	9.52	L1
2	0.209	48.42	63.26	14.84	34.51	53.26	18.75	9.55	L1
3	0.285	46.95	60.67	13.72	31.97	50.67	18.70	9.72	L1
4	0.312	45.67	59.92	14.25	30.89	49.92	19.03	9.69	L1
5	0.398	47.29	57.91	10.61	35.17	47.91	12.74	9.73	L1
6	0.416	45.16	57.54	12.37	36.04	47.54	11.50	9.72	L1

Note:
1. The following Quasi-Peak and Average measurements were performed on the EUT:
2. Margin[dB] = Limit[dBµV] - Level[dBµV]

All rights reserved. Unless otherwise specified, no part of this report may be reproduced or utilized in any part, form or by any means, electronic or mechanical, including photocopying and microfilm, without permission in writing from TOWE.

Test mode:	BLE		
Test Voltage:	AC 120V / 60Hz	Phase:	Neutral

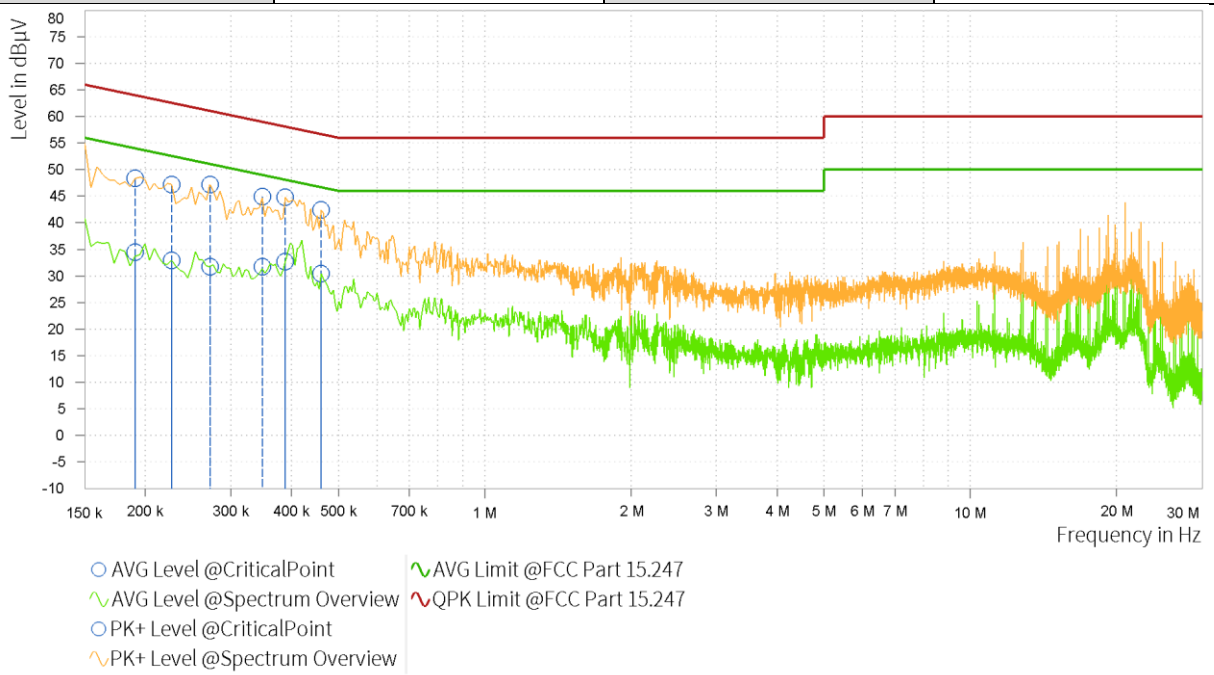

Rg	Frequency [MHz]	PK+ Level [dBµV]	PK+: QPK Limit [dBµV]	PK+ Margin [dB]	AVG Level [dBµV]	AVG Limit [dBµV]	AVG Margin [dB]	Correction [dB]	Line
1	0.191	48.37	64.01	15.65	34.43	54.01	19.58	9.68	N
2	0.227	47.22	62.58	15.36	32.95	52.58	19.63	9.71	N
3	0.272	47.23	61.07	13.84	31.73	51.07	19.34	9.73	N
4	0.348	44.93	59.01	14.08	31.74	49.01	17.27	9.75	N
5	0.389	44.83	58.10	13.27	32.74	48.10	15.36	9.76	N
6	0.461	42.38	56.68	14.30	30.47	46.68	16.22	9.78	N

Note:
1. The following Quasi-Peak and Average measurements were performed on the EUT:
2. Margin[dB] = Limit[dBµV] - Level[dBµV]

All rights reserved. Unless otherwise specified, no part of this report may be reproduced or utilized in any part, form or by any means, electronic or mechanical, including photocopying and microfilm, without permission in writing from TOWE.

4.3 Radiated Spurious Emissions and Band Edge

Limits

Spurious emissions are permitted in an of the frequency bands:

MHz	MHz	MHz	MHz	GHz	GHz
0.090 - 0.110	12.29 - 12.293	149.9 - 150.05	1660 - 1710	4.5 - 5.15	14.47 - 14.5
0.495 - 0.505	12.51975 - 1252025	156.52475 - 156.52525	1718.8 - 1722.2	5.35 - 5.46	15.35 - 16.2
2.1735 - 2.1905	12.5767 - 12.57725	156.7 - 156.9	2200 - 2300	7.25 - 7.75	17.7 - 21.4
4.125 - 128	13.36 - 13.41	162.0125 - 167.17	2310 - 2390	8.025 - 8.5	22.01 - 23.12
4.17725 - 4.17775	16.42 - 16.423	167.72 - 173.2	2483.5 - 2500	9.0 - 9.2	23.6 - 24.0
4.20725 - 4.20775	16.69475 - 16.69525	240 - 285	2655 - 2900	9.3 - 9.5	31.2 - 31.8
6.215 - 6.218	1680425 - 1680475	322 - 335.4	3260 - 3267	10.6 - 12.7	36.43 - 36.5
6.26775 - 6.26825	25.5 - 25.67	399.9 - 410	3332 - 3339	13.25 - 13.4	
6.31175 - 6.31225	37.5 - 38.25	608 - 614	3345.8 - 3358		
8.291 - 8.294	73 - 74.6	960 - 1240	3600 - 4400		
8.362 - 8.366	74.8 - 75.2	1300 - 1427			
8.37625 - 8.38675	108 - 121.94	1435 - 1626.5			
8.41425 - 8.41475	123 - 138	1645.5 - 1646.5			

Radiated disturbance of an intentional radiator:

Frequency	Field strength (μV/m)	Limit (dBμV/m	Remark	Measurement distance (m)
0.009MHz-0.490MHz	2400/F(kHz)	-	-	300
0.490MHz-1.705MHz	24000/F(kHz)	-	-	30
1.705MHz-30MHz	30	-	-	30
30MHz-88MHz	100	40.0	Quasi-peak	3
88MHz-216MHz	150	43.5	Quasi-peak	3
216MHz-960MHz	200	46.0	Quasi-peak	3
960MHz-1GHz	500	54.0	Quasi-peak	3
Above 1GHz	500	74.0	Peak	3
		54.0	Average	

Test Procedure

ANSI C63.10-2020+Cor. 1-2023+C63.10a-2024 + Errata to C63.10a-2024 Section 6.4 & 6.5 & 6.6

Test Settings

1. For radiated emissions measurements performed at frequencies less than or equal to 1GHz, the EUT shall be placed on a RF-transparent table or support at a nominal height of 80cm above the reference ground plane.
2. For radiated emissions measurements performed at frequencies above 1GHz, the EUT shall be placed on a RF-transparent table or support at a nominal height of 80cm above the ground plane.
3. Radiated measurements shall be made with the measurement antenna positioned in both horizontal and vertical polarization. The measurement antenna shall be varied from 1m to 4m in height above the reference ground in a search for the relative positioning that produces the maximum radiated signal level (i.e, field strength or received power), when orienting the measurement antenna in vertical polarization, the minimum height of the lowest element of the antenna shall clear the site reference ground plane by at least 25cm.
4. For each suspected emission, the EUT was ranged its worst case and then tune the antenna tower(from 1~4m) and turntable(from 0~360°) find the maximum reading. Preamplifier and a high pass filter are used for the test in order get better signal level comply with the guidelines.
5. Set to the maximum power setting and enable the EUT transmit continuously.
6. The emission limits shown in the above table are based on measurements employing a CISPR quasi-peak detector except for the frequency bands 9-90 kHz, 110-490 kHz and above 1000 MHz. Radiated emission limits in these three bands are based on measurements employing an average detector.
7. spectrum analyzer setting:

   Measurements Below 1000MHz: RBW = 120 kHz; VBW ≥ 300 kHz; Detector = Peak

   Measurements Above 1000MHz: RBW = 1 MHz; VBW ≥ 3 MHz; Detector = Peak

All rights reserved. Unless otherwise specified, no part of this report may be reproduced or utilized in any part, form or by any means, electronic or mechanical, including photocopying and microfilm, without permission in writing from TOWE.

Average Measurements Above 1000MHz:

RBW = 1 MHz, VBW ≥ 1/T, with peak detector for average measurements.

8. The field strength is calculated by adding the Antenna Factor, Cable Factor. The basic equation with a sample calculation is as follows:

   Level = Reading(dBμV) + Factor(dB):

   Factor = Cable Factor(dB) + AF(dB/m) - Preamplifier gain(dB)

   AF = Antenna Factor(dB/m)

   Margin = Limit(dBμV/m) – Level(dBμV/m)
9. Repeat above procedures until all frequencies measured was complete.
10. Measure and record the results in the test report.

Test Notes

1. Emissions below 18GHz were measured at a 3-meter test distance while emissions above 18GHz were measured at a 1-meter test distance with the application of a distance correction factor.
2. Radiated spurious emissions were investigated from 9kHz to 30MHz, 30MHz-1GHz and above 1GHz. the disturbance between 9kHz to 30MHz and 18GHz to 40GHz was very low. The amplitude of spurious emissions from the radiator which are attenuated more than 20dB below the limit need not be recorded, so only the harmonics had been displayed.
3. These frequencies which near "-" should be ignored because they are Fundamental frequency.

Test Setup

Refer to section 2.7.1 for details.

Measuring Instruments

The measuring equipment is listed in the section 3.1 of this test report.

Test Result

The detailed test data see: **Appendix.**

All rights reserved. Unless otherwise specified, no part of this report may be reproduced or utilized in any part, form or by any means, electronic or mechanical, including photocopying and microfilm, without permission in writing from TOWE.

5 Test Setup Photos

The detailed test data see: **Appendix A - BTWIFI Setup Photos**

All rights reserved. Unless otherwise specified, no part of this report may be reproduced or utilized in any part, form or by any means, electronic or mechanical, including photocopying and microfilm, without permission in writing from TOWE.

Appendix

Test for spot check:

Radiated Spurious Emissions

Test Result

Project Information			
Mode:	BLE_2M	Band:	-
Bandwidth	-	Channel	High
SN:	P1Y25DH44001107	Engineer:	Tian Shuo
Remark:	-		

Test Graph

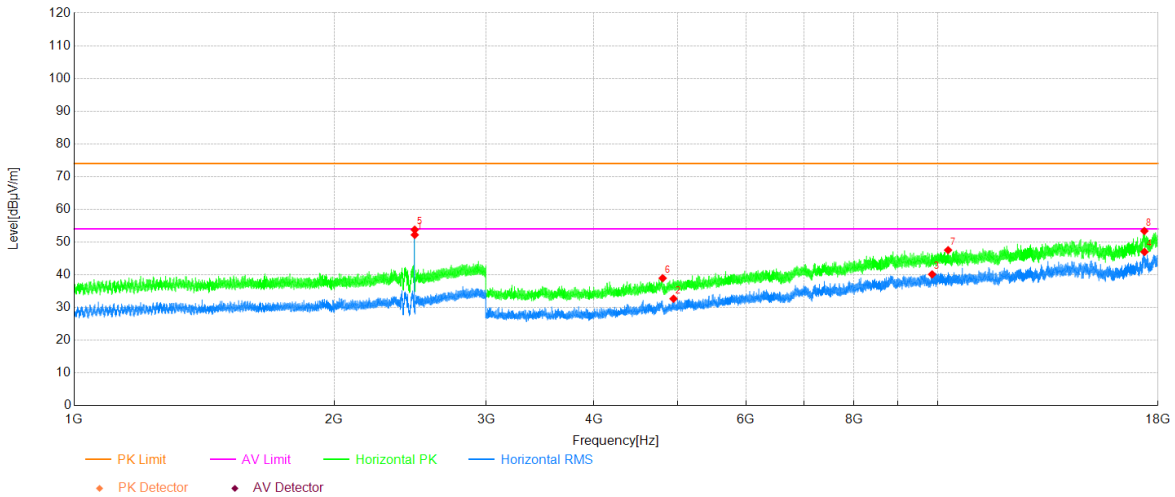

Data List								
NO.	Freq. [MHz]	Reading [dBµV]	Factor [dB]	Level [dBµV/m]	Limit [dBµV/m]	Margin [dB]	Polarity	Verdict
1	2480.10	49.83	2.37	52.20	-	-	Horizontal	NA
2	4944.50	40.27	-7.59	32.68	54.00	21.32	Horizontal	PASS
3	9853.50	36.82	3.31	40.13	54.00	13.87	Horizontal	PASS
4	17363.50	34.65	12.33	46.98	54.00	7.02	Horizontal	PASS
5	2480.00	51.41	2.37	53.78	-	-	Horizontal	NA
6	4804.00	46.53	-7.58	38.95	74.00	35.05	Horizontal	PASS
7	10283.00	43.80	3.73	47.53	74.00	26.47	Horizontal	PASS
8	17355.50	40.74	12.65	53.39	74.00	20.61	Horizontal	PASS

All rights reserved. Unless otherwise specified, no part of this report may be reproduced or utilized in any part, form or by any means, electronic or mechanical, including photocopying and microfilm, without permission in writing from TOWE.

Project Information			
Mode:	BLE_2M	Band:	-
Bandwidth	-	Channel	High
SN:	P1Y25DH44001107	Engineer:	Tian Shuo
Remark:	-		

Test Graph

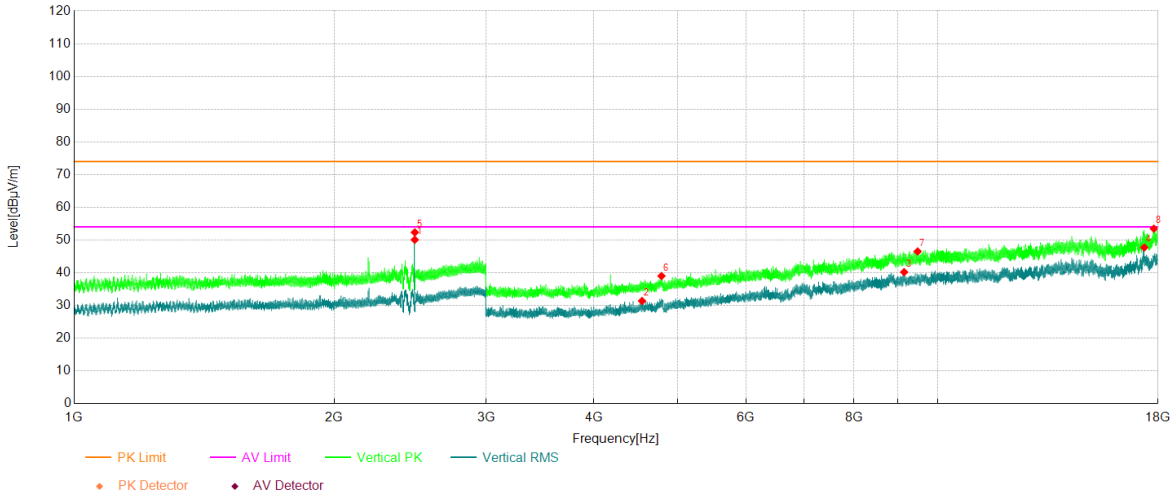

Data List

NO.	Freq. [MHz]	Reading [dBμV]	Factor [dB]	Level [dBμV/m]	Limit [dBμV/m]	Margin [dB]	Polarity	Verdict
1	2480.00	47.71	2.37	50.08	-	-	Vertical	NA
2	4546.50	40.49	-9.10	31.39	54.00	22.61	Vertical	PASS
3	9146.00	37.07	3.14	40.21	54.00	13.79	Vertical	PASS
4	17351.50	34.94	12.80	47.74	54.00	6.26	Vertical	PASS
5	2480.40	49.98	2.37	52.35	-	-	Vertical	NA
6	4788.50	46.64	-7.63	39.01	74.00	34.99	Vertical	PASS
7	9480.00	44.23	2.29	46.52	74.00	27.48	Vertical	PASS
8	17801.00	41.40	12.08	53.48	74.00	20.52	Vertical	PASS

All rights reserved. Unless otherwise specified, no part of this report may be reproduced or utilized in any part, form or by any means, electronic or mechanical, including photocopying and microfilm, without permission in writing from TOWE.

Radiated Band Edge

Test Result

Project Information			
Mode:	BLE_2M	Band:	-
Bandwidth	-	Channel	High
SN:	P1Y25DH44001107	Engineer:	Tian Shuo
Remark:			

Test Graph

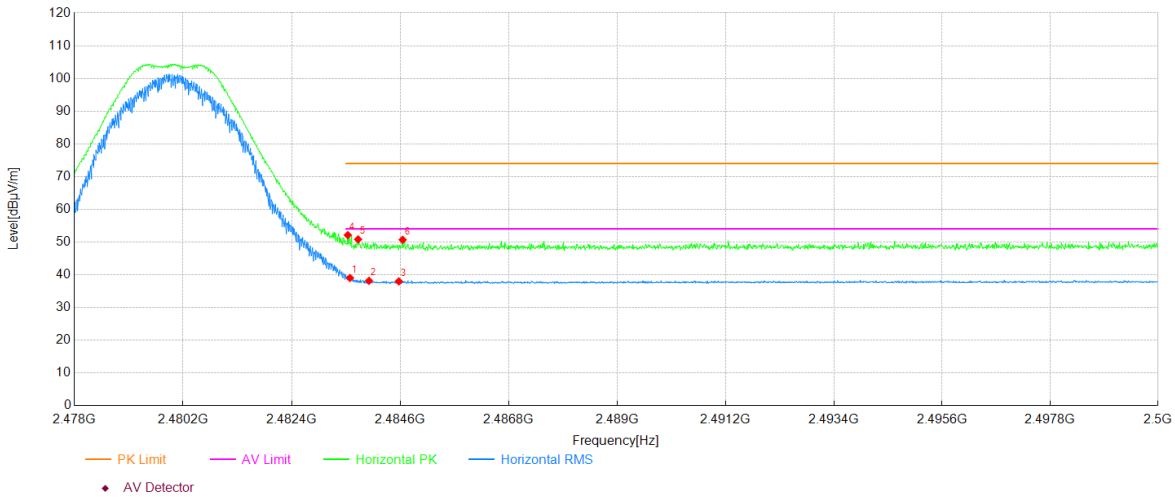

Data List

NO.	Freq. [MHz]	Reading [dBµV]	Factor [dB]	Level [dBµV/m]	Limit [dBµV/m]	Margin [dB]	Polarity	Verdict
1	2483.58	37.17	1.85	39.02	54.00	14.98	Horizontal	PASS
2	2483.96	36.28	1.87	38.15	54.00	15.85	Horizontal	PASS
3	2484.57	36.11	1.87	37.98	54.00	16.02	Horizontal	PASS
4	2483.54	50.28	1.85	52.13	74.00	21.87	Horizontal	PASS
5	2483.74	48.96	1.86	50.82	74.00	23.18	Horizontal	PASS
6	2484.65	48.83	1.87	50.70	74.00	23.30	Horizontal	PASS

All rights reserved. Unless otherwise specified, no part of this report may be reproduced or utilized in any part, form or by any means, electronic or mechanical, including photocopying and microfilm, without permission in writing from TOWE.

Project Information			
Mode:	BLE_2M	Band:	-
Bandwidth	-	Channel	High
SN:	P1Y25DH44001107	Engineer:	Tian Shuo
Remark:			

Test Graph

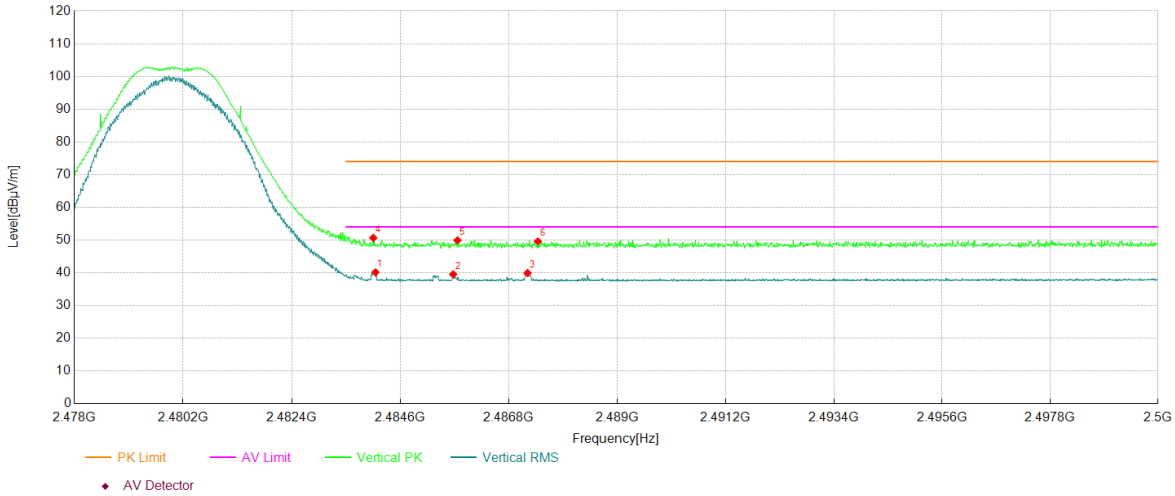

Data List

NO.	Freq. [MHz]	Reading [dBµV]	Factor [dB]	Level [dBµV/m]	Limit [dBµV/m]	Margin [dB]	Polarity	Verdict
1	2484.10	38.28	1.87	40.15	54.00	13.85	Vertical	PASS
2	2485.67	37.66	1.88	39.54	54.00	14.46	Vertical	PASS
3	2487.18	38.02	1.90	39.92	54.00	14.08	Vertical	PASS
4	2484.05	48.79	1.87	50.66	74.00	23.34	Vertical	PASS
5	2485.76	48.04	1.88	49.92	74.00	24.08	Vertical	PASS
6	2487.39	47.69	1.90	49.59	74.00	24.41	Vertical	PASS

~The End~

All rights reserved. Unless otherwise specified, no part of this report may be reproduced or utilized in any part, form or by any means, electronic or mechanical, including photocopying and microfilm, without permission in writing from TOWE.