DYNAMIC FREQUENCY SELECTION

DFS Test Report

APPLICANT	:	Quectel Wireless Solutions Co., Ltd.
EQUIPMENT	:	Smart Module
BRAND NAME	:	Quectel
MODEL NAME	:	SG560D-WF
FCC ID	:	XMR2023SG560DWF
STANDARD	:	FCC Part 15 Subpart E
CLASSIFICATION	:	(NII) Unlicensed National Information Infrastructure
TEST DATE(S)	:	Sep. 28, 2024

We, Sporton International Inc. (Kunshan), would like to declare that the tested sample has been evaluated in accordance with the procedures and shown to be compliant with the applicable technical standards.

The test results in this report apply exclusively to the tested model / sample. Without written approval of Sporton International Inc. (Kunshan), the test report shall not be reproduced except in full.

Jason Jia

Approved by: Jason Jia

Sporton International Inc. (Kunshan)
No. 1098, Pengxi North Road, Kunshan Economic Development Zone Jiangsu Province 215300
People's Republic of China

TABLE OF CONTENTS

REVISION HISTORY **3**

SUMMARY OF DYNAMIC FREQUENCY SELECTION TEST **4**

1 GENERAL DESCRIPTION **5**

1.1. Applicant 5
1.2. Manufacturer 5
1.3. Feature of Equipment Under Test 5
1.4. Product Specification of Equipment Under Test 5
1.5. Modification of EUT 6
1.6. Testing Site 6
1.7. Applied Standards 6
1.8. Support Unit used in test configuration and system 6

2 REQUIREMENTS AND PARAMETERS FOR DFS TEST **7**

2.1. Summary of Dynamic Frequency Selection Test 7
2.2. Applicability of DFS Requirements 8

3 CALIBRATION SETUP AND DFS TEST RESULTS **15**

3.1. Calibration of Radar Waveform 15
3.2 U-NII Detection Bandwidth (7.8.1) 18
3.3 Channel Availability Check (7.8.2) 20
3.4 In-Service Monitoring: Channel Move Time, Channel Closing Transmission Time and Non-Occupancy Period (7.8.3) 25
3.5 Statistical Performance Check (7.8.4) 30

4 LIST OF MEASURING EQUIPMENT **39**

5 MEASUREMENT UNCERTAINTY **40**

APPENDIX A. RADAR PARAMETERS

APPENDIX B. SETUP PHOTOGRAPHS

REVISION HISTORY

REPORT NO.	VERSION	DESCRIPTION	ISSUED DATE
FZ482209	Rev. 01	Initial issue of report	Oct. 23, 2024

SUMMARY OF DYNAMIC FREQUENCY SELECTION TEST

UNII	Description	Limit	Result
U-NII 2A 5250-5350MHz & U-NII 2C 5470-5725MHz	Channel Availability Check Time	> 60sec	Pass
	U-NII Detection Bandwidth	> 100% of the U-NII 99% transmission power bandwidth	Pass
	Statistical Performance Check	Type 1,2,3,4 >= 60% Type 1~4 and 5 >= 80% Type 6 >= 70%	Pass
	Channel Move Time	< 10 sec	Pass
	Channel Closing Transmission Time	< 200 ms + aggregate of 60 ms over remaining 10 s period	Pass
	Non-Occupancy Period Test	> 30 minutes	Pass

Note: This is a variant report, the change note could be referred to the Class II Permissive Change letter which is exhibit separately. According to the differences, only the related test cases were verified from original test report (Report Number SEWA2303000041RG06).

Conformity Assessment Condition:
1. The test results (PASS/FAIL) with all measurement uncertainty excluded are presented against the regulation limits or in accordance with the requirements stipulated by the applicant/manufacturer who shall bear all the risks of non-compliance that may potentially occur if measurement uncertainty is taken into account. 2. The measurement uncertainty please refer to each test result in the section “Measurement Uncertainty”
Disclaimer:
The product specifications of the EUT presented in the test report that may affect the test assessments are declared by the manufacturer who shall take full responsibility for the authenticity.

1 General Description

1.1. Applicant

Quectel Wireless Solutions Co., Ltd.
Building 5, Shanghai Business Park Phase III (Area B), No.1016 Tianlin Road, Minhang District, Shanghai 200233, China

1.2. Manufacturer

Quectel Wireless Solutions Co., Ltd.
Building 5, Shanghai Business Park Phase III (Area B), No.1016 Tianlin Road, Minhang District, Shanghai 200233, China

1.3. Feature of Equipment Under Test

Product Feature	
Equipment	Smart Module
Brand Name	Quectel
Model Name	SG560D-WF
FCC ID	XMR2023SG560DWF
SN Code	D1C24CG10000191
HW Version	R2.0
SW Version	SG560DWFPBR03A01
EUT Stage	Identical Prototype

Remark: The above EUT's information was declared by manufacturer. Please refer to the specifications or user's manual for more detailed description.

1.4. Product Specification of Equipment Under Test

Product Specification subjective to this standard	
DFS Function	Master
Tx/Rx Channel Frequency Range	5260 MHz ~ 5320 MHz 5500 MHz ~ 5720 MHz
EUT support WLAN function	802.11a 802.11n HT20/HT40 802.11ac VHT20/VHT40/VHT80 802.11ax HE20/HE40/HE80/HE160
Type of Modulation	802.11a/n : OFDM (BPSK / QPSK / 16QAM / 64QAM) 802.11ac : OFDM (BPSK / QPSK / 16QAM / 64QAM / 256QAM) 802.11ax: OFDM (BPSK / QPSK / 16QAM / 64QAM / 256QAM / 1024QAM)

1.5. Modification of EUT

No modifications are made to the EUT during all test items.

1.6. Testing Site

Sporton International Inc. (Kunshan) is accredited to ISO/IEC 17025:2017 by American Association for Laboratory Accreditation with Certificate Number 5145.02.

Test Firm	Sporton International Inc. (Kunshan)		
Test Site Location	No. 1098, Pengxi North Road, Kunshan Economic Development Zone Jiangsu Province 215300 People's Republic of China TEL : +86-512-57900158		
Test Site No.	**Sporton Site No.**	**FCC Designation No.**	**FCC Test Firm Registration No.**
	DFS01-KS	CN1257	314309

1.7. Applied Standards

According to the specifications of the manufacturer, the EUT must comply with the requirements of the following standards:

- FCC Part 15 Subpart E
- FCC KDB 905462 D02 UNII DFS Compliance Procedures New Rules v02
- FCC KDB 905462 D03 UNII Clients Without Radar Detection New Rules v01r02

Remark: All test items were verified and recorded according to the standards and without any deviation during the test.

1.8. Support Unit used in test configuration and system

Item	Equipment	Trade Name	Model Name	FCC ID	HW / FW Version	Power Cord
1.	WLAN AP	ASUS	RT-AX88U	MSQ-RTAXHP00	FW: 3.0.0.4.384_4730-g8g74d3c	Unshielded, 1.8 m
2.	Notebook	Lenovo	Edge E335	PPD-AR5B95	N/A	AC I/P: Unshielded, 1.2 m DC O/P: Shielded, 1.8 m

2 Requirements and Parameters for DFS Test

2.1. Summary of Dynamic Frequency Selection Test

Bandwidth and Channel	Test Items	Limit
160MHz 5570MHz (CH114)		
160MHz (CH114) 5570MHz	Channel Move Time	< 10 sec
	Channel Closing Transmission time	< 200 ms + aggregate of 60 ms over remaining 10 s period
	Non-Occupancy Period and Client Beacon Test	≥ 30 minutes

2.2. Applicability of DFS Requirements

EUT is client and operates as client without radar detection function.

Table 1: Applicability of DFS Requirements Prior to Use of a Channel

Requirement	Operational Mode		
	Master	Client Without Radar Detection	Client With Radar Detection
Non-Occupancy Period	Yes	Not required	Yes
DFS Detection Threshold	Yes	Not required	Yes
Channel Availability Check Time	Yes	Not required	Not required
U-NII Detection Bandwidth	Yes	Not required	Yes

Table 2: Applicability of DFS requirements during normal operation

Requirement	Operational Mode		
	Master	Client Without Radar Detection	Client With Radar Detection
DFS Detection Threshold	Yes	Not required	Yes
Channel Closing Transmission Time	Yes	Yes	Yes
Channel Move Time	Yes	Yes	Yes
U-NII Detection Bandwidth	Yes	Not required	Yes
Client Beacon Test	N/A	Yes	Yes

Additional requirements for devices with multiple bandwidth modes	Operational Mode	
	Master or Client With Radar Detection	Client Without Radar Detection
U-NII Detection Bandwidth and Statistical Performance Check	All BW modes must be tested	Not required
Channel Move Time and Channel Closing Transmission Time	Test using widest BW mode available	Test using the widest BW mode available for the link
All other tests	Any single BW mode	Not required

Note
Frequencies selected for statistical performance check (Section 7.8.4) should include several frequencies within the radar detection bandwidth and frequencies near the edge of the radar detection bandwidth. For 802.11 devices it is suggested to select frequencies in each of the bonded 20 MHz channels and the channel center frequency.

2.1 DFS Detection Thresholds

Table 3: DFS Detection Thresholds for Master Devices

Maximum Transmit Power	Value (see notes 1, 2, and 3)
EIRP ≥ 200 milliwatt	-64 dBm
EIRP < 200 milliwatt and power spectral density < 10 dBm/MHz	-62 dBm
EIRP < 200 milliwatt that do not meet the power spectral density requirement	-64 dBm

Note 1: This is the level at the input of the receiver assuming a 0 dBi receive antenna.

Note 2: Throughout these test procedures an additional 1 dB has been added to the amplitude of the test transmission waveforms to account for variations in measurement equipment. This will ensure that the test signal is at or above the detection threshold level to trigger a DFS response.

Note 3: EIRP is based on the highest antenna gain. For MIMO devices refer to KDB Publication 662911 D01.

2.2 DFS Response requirement values

Parameter	Value
Non-occupancy period	Minimum 30 minutes
Channel Availability Check Time	60 seconds
Channel Move Time	10 seconds See Note 1.
Channel Closing Transmission Time	200 milliseconds + an aggregate of 60 milliseconds over remaining 10 second period. See Notes 1 and 2.
U-NII Detection Bandwidth	Minimum 100% of the 99% power bandwidth See Note 3.

Note 1: The instant that the *Channel Move Time* and the *Channel Closing Transmission Time* begins is as follows:

- For the Short pulse radar Test Signals this instant is the end of the *Burst*.
- For the Frequency Hopping radar Test Signal, this instant is the end of the last radar *Burst* generated.
- For the Long Pulse radar Test Signal this instant is the end of the 12 second period defining the radar transmission.

Note 2: The *Channel Closing Transmission Time* is comprised of 200 milliseconds starting at the beginning of the *Channel Move Time* plus any additional intermittent control signals required to facilitate *Channel* changes (an aggregate of 60 milliseconds) during the remainder of the 10 second period. The aggregate duration of control signals will not count quiet periods in between transmissions.

Note 3: During the *U-NII Detection Bandwidth* detection test, radar type 0 is used and for each frequency step the minimum percentage of detection is 90%. Measurements are performed with no data traffic.

2.3 Short Pulse Radar Test Waveforms

Radar Type	Pulse Width (μsec)	PRI (μsec)	Number of Pulses	Minimum Percentage of Successful Detection	Minimum Trials
0	1	1428	18	60%	30
1	1	Test A Test B	$\text{Roundup}\left\{\left(\frac{1}{360}\right)\cdot\left(\frac{19\cdot 10^6}{\text{PRI}_{\mu\text{sec}}}\right)\right\}$	60%	30
2	1-5	150-230	23-29	60%	30
3	6-10	200-500	16-18	60%	30
4	11-20	200-500	12-16	60%	30
Aggregate (Radar Types 1-4)				80%	120

Test A: 15 unique PRI values randomly selected from the list of 23 PRI values in Table 5a
Test B: 15 unique PRI values randomly selected within the range of 518-3066 μsec, with a minimum increment of 1 μsec, excluding PRI values selected in Test A

A minimum of 30 unique waveforms are required for each of the short pulse radar types 2 through 4. For short pulse radar type 1, the same waveform is used a minimum of 30 times. If more than 30 waveforms are used for short pulse radar types 2 through 4, then each additional waveform must also be unique and not repeated from the previous waveforms.

If more than 30 waveforms are used for Short Pulse Radar Type 1, then each additional waveform is generated with Test B and must also be unique and not repeated from the previous waveforms in Tests A or B.

The aggregate is the average of the percentage of successful detections of short pulse radar types 1-4.

Table 5a - Pulse Repetition Intervals Values for Test A

Pulse Repetition Frequency Number (1 to 23)	Pulse Repetition Frequency (Pulses Per Second)	Pulse Repetition Interval (Microseconds)
1	1930.5	518
2	1858.7	538
3	1792.1	558
4	1730.1	578
5	1672.2	598
6	1618.1	618
7	1567.4	638
8	1519.8	658
9	1474.9	678
10	1432.7	698
11	1392.8	718
12	1355.0	738
13	1319.3	758
14	1285.3	778
15	1253.1	798
16	1222.5	818
17	1193.3	838
18	1165.5	858
19	1139.0	878
20	1113.6	898
21	1089.3	918
22	1066.1	938
23	326.2	3066

2.4 Long Pulse Radar Test Waveform

Radar Type	Pulse Width (μsec)	Chirp Width (MHz)	PRI (μsec)	Number of Pulses per *Burst*	Number of *Bursts*	Minimum Percentage of Successful Detection	Minimum Trials
5	50-100	5-20	1000-2000	1-3	8-20	80%	30

The parameters for this waveform are randomly chosen. Thirty unique waveforms are required for the Long Pulse radar test signal. If more than 30 waveforms are used for the Long Pulse radar test signal, then each additional waveform must also be unique and not repeated from the previous waveforms. Each waveform is defined as follows:

Note: The center frequency for each of the 30 trials of the Bin 5 radar shall be randomly selected within 80% of the Occupied Bandwidth.

(1) The transmission period for the Long Pulse Radar test signal is 12 seconds.

(2) There are a total of 8 to 20 Bursts in the 12 second period, with the number of Bursts being randomly chosen. This number is Burst_Count.

(3) Each Burst consists of 1 to 3 pulses, with the number of pulses being randomly chosen. Each Burst within the 12 second sequence may have a different number of pulses.

(4) The pulse width is between 50 and 100 microseconds, with the pulse width being randomly chosen. Each pulse within a Burst will have the same pulse width. Pulses in different Bursts may have different pulse widths.

(5) 5) Each pulse has a linear frequency modulated chirp between 5 and 20 MHz, with the chirp width being randomly chosen. Each pulse within a **transmission period** will have the same chirp width. The chirp is centered on the pulse. For example, with a radar frequency of 5300 MHz and a 20 MHz chirped signal, the chirp starts at 5290 MHz and ends at 5310 MHz

(6) If more than one pulse is present in a Burst, the time between the pulses will be between 1000 and 2000 microseconds, with the time being randomly chosen. If three pulses are present in a Burst, the time between the first and second pulses is chosen independently of the time between the second and third pulses.

(7) The 12 second transmission period is divided into even intervals. The number of intervals is equal to Burst_Count. Each interval is of length (12,000,000 / Burst_Count) microseconds. Each interval contains one Burst. The start time for the Burst, relative to the beginning of the interval, is between 1 and [(12,000,000 / Burst_Count) – (Total Burst Length) + (One Random PRI Interval)] microseconds, with the start time being randomly chosen. The step interval for the start time is 1 microsecond. The start time for each Burst is chosen independently.

A representative example of a Long Pulse radar test waveform:

(1) The total test signal length is 12 seconds.

(2) 8 Bursts are randomly generated for the Burst_Count.

(3) Burst 1 has 2 randomly generated pulses.

(4) The pulse width (for both pulses) is randomly selected to be 75 microseconds.

(5) The PRI is randomly selected to be at 1213 microseconds.

(6) Bursts 2 through 8 are generated using steps 3 – 5.

(7) Each Burst is contained in even intervals of 1,500,000 microseconds. The starting location for Pulse 1, Burst 1 is randomly generated (1 to 1,500,000 minus the total Burst 1 length + 1 random PRI interval) at the 325,001 microsecond step. Bursts 2 through 8 randomly fall in successive 1,500,000 microsecond intervals (i.e. Burst 2 falls in the 1,500,001 – 3,000,000 microsecond range).

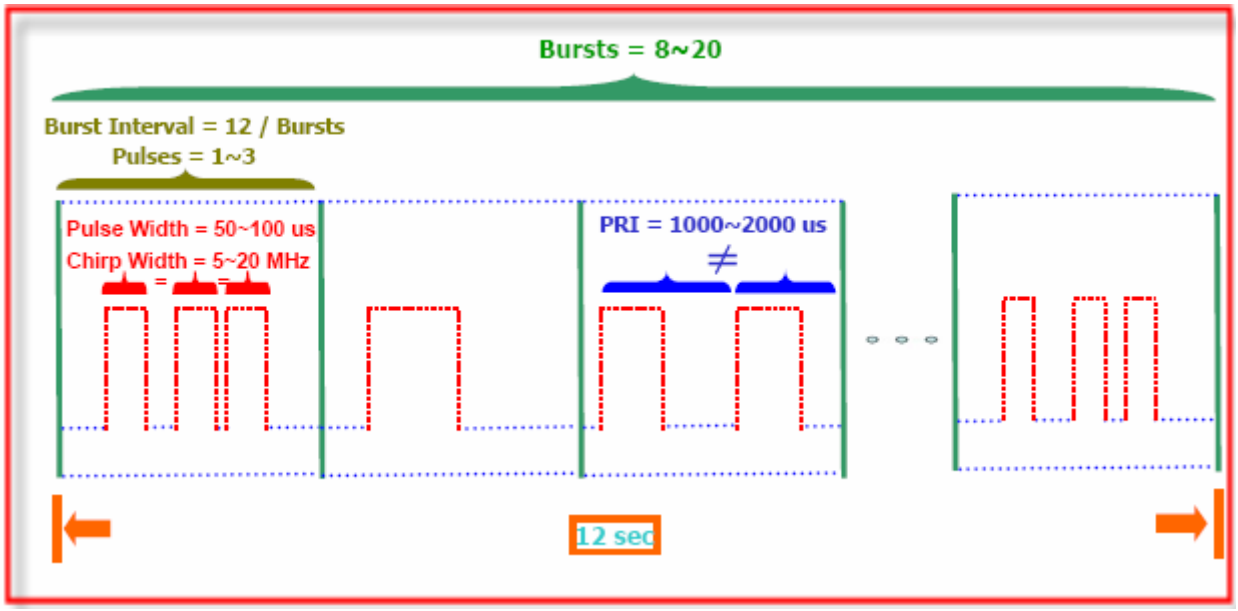

2.5 Frequency Hopping Radar Test Waveform

Radar Type	Pulse Width (µsec)	PRI (µsec)	Pulses per Hop	Hopping Rate (kHz)	Hopping Sequence Length (msec)	Minimum Percentage of Successful Detection	Minimum Trials
6	1	333	9	0.333	300	70%	30

For the Frequency Hopping Radar Type, the same Burst parameters are used for each waveform. The hopping sequence is different for each waveform and a 100-length segment is selected from the hopping sequence defined by the following algorithm:

The first frequency in a hopping sequence is selected randomly from the group of 475 integer frequencies from 5250 – 5724 MHz. Next, the frequency that was just chosen is removed from the group and a frequency is randomly selected from the remaining 474 frequencies in the group. This process continues until all 475 frequencies are chosen for the set. For selection of a random frequency, the frequencies remaining within the group are always treated as equally likely.

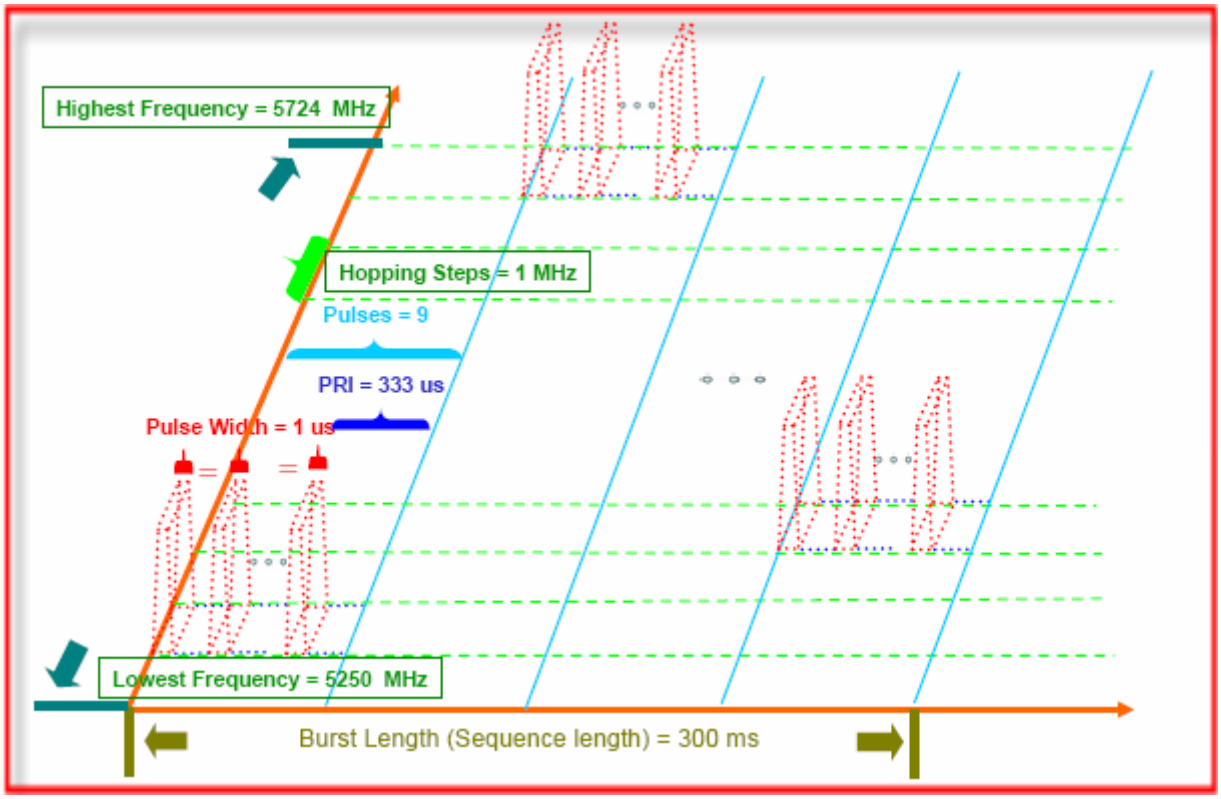

3 Calibration Setup and DFS Test Results

3.1. Calibration of Radar Waveform

3.1.1 Radar Waveform Calibration Procedure

The Interference Radar Detection Threshold Level is (-64) + (-1.2) [dBi] + 1dB = -64.2 dBm that had been taken into account the output power range and antenna gain. The following equipment setup was used to calibrate the radiated Radar Waveform. A vector signal generator was utilized to establish the test signal level for radar type 0~6. During this process there were no transmissions by either the Master or Client Device. The spectrum analyzer was switched to the zero span (Time Domain) at the frequency of the Radar Waveform generator. Peak detection was used. The spectrum analyzer resolution bandwidth (RBW) and video bandwidth (VBW) were set to 3 MHz to measure the radar waveform. The vector signal generator amplitude was set so that the power level measured at the spectrum analyzer was (-64dBm) + (-1.2 [dBi]+ 1 dB= -64.2dBm. Capture the spectrum analyzer plots on radar waveform.

3.1.2 Test Setup

Conducted Test Setup

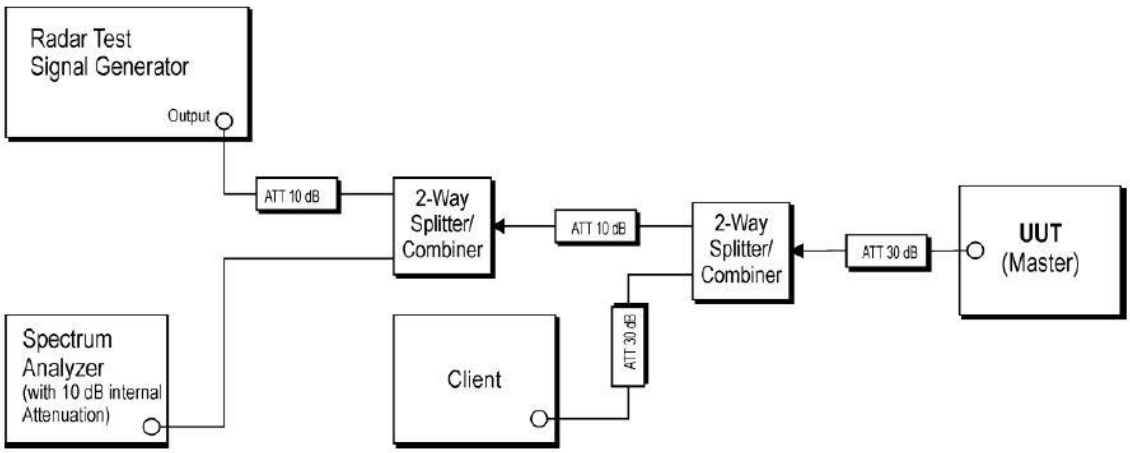

3.1.3 Calibration Deviation

There is no deviation with the original standard.

3.1.4 Radar Waveform Calibration Result

<160MHz / 5570MHz>

Radar Type 0	
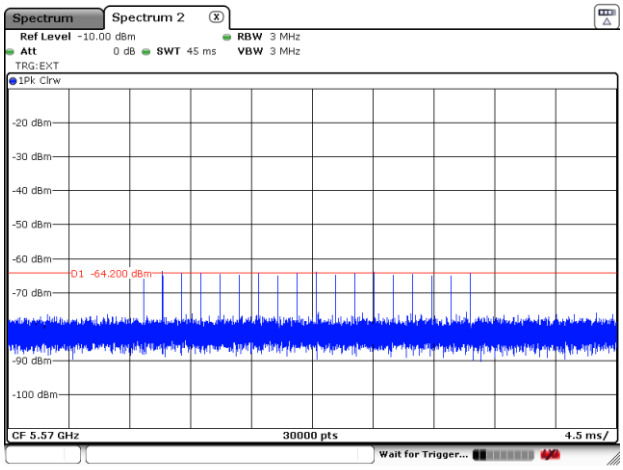	
Radar Type 1	**Radar Type 2**
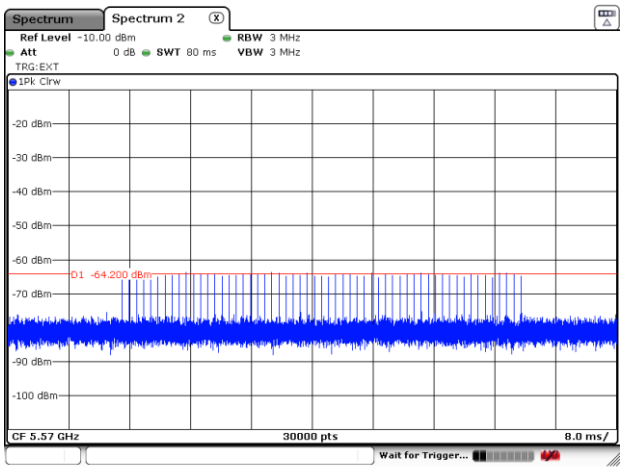	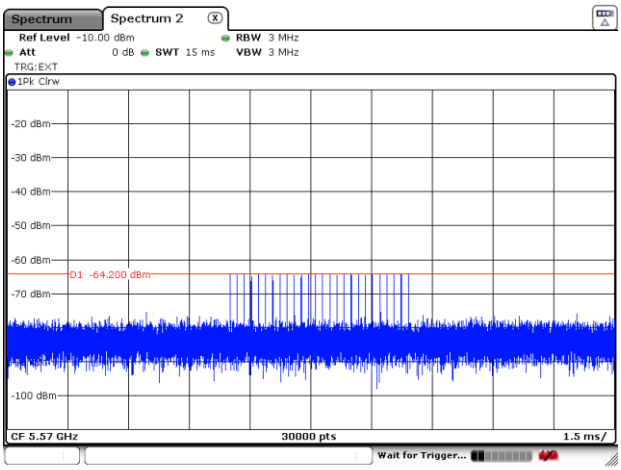

Radar Type 3	Radar Type 4
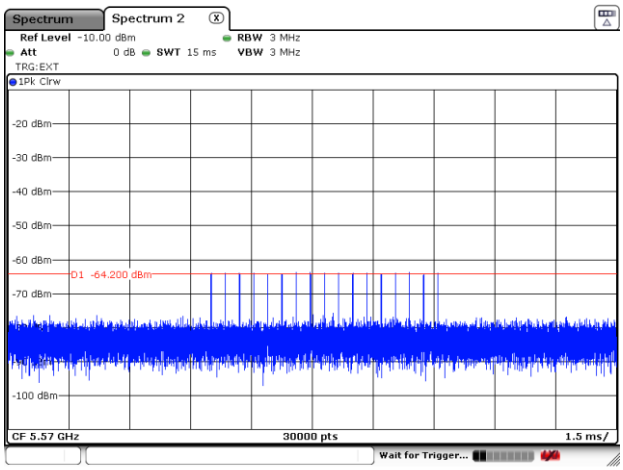	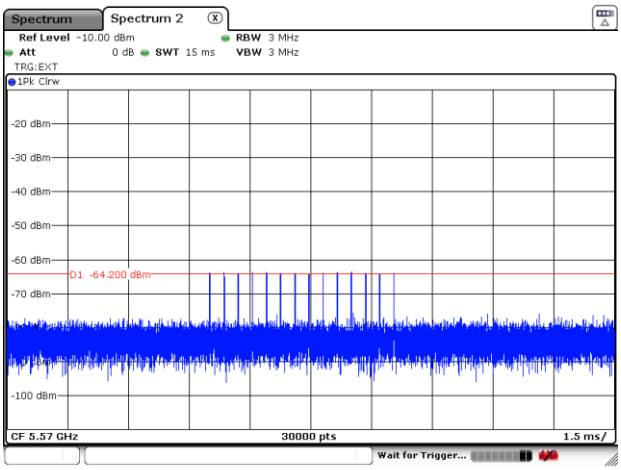
Single Burst of Radar Type 5	**Single Burst of Radar Type 6**
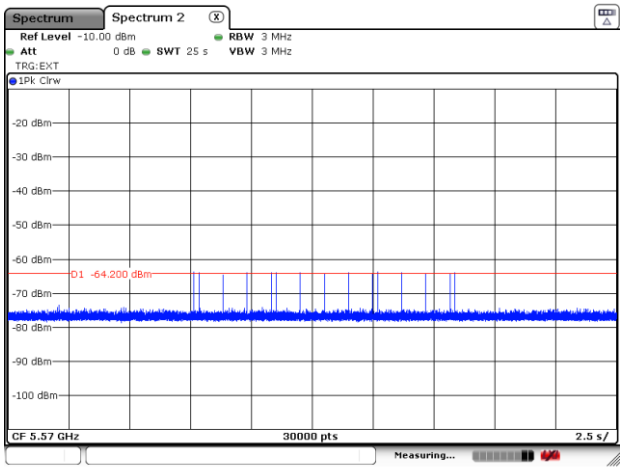	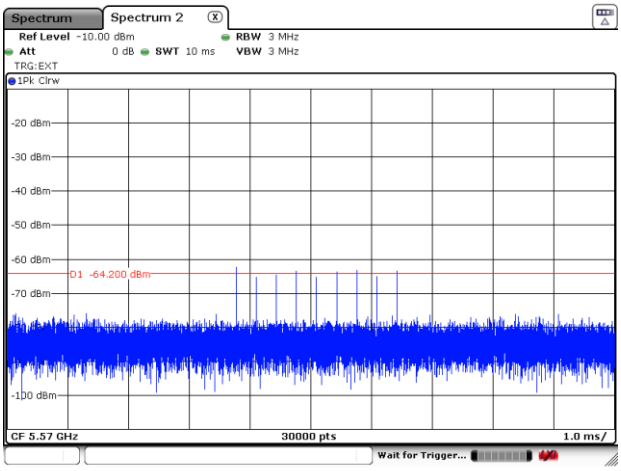

3.2 U-NII Detection Bandwidth (7.8.1)

3.2.1 Limit of U-NII Detection Bandwidth

The U-NII Detection Bandwidth shall contain minimum 100% of the 99% power bandwidth.
During the U-NII Detection Bandwidth detection test, radar type 0 is used and for each frequency step the minimum percentage of detection is 90%. Measurements are performed with no data traffic.

3.2.2 Test Procedures

(1) Adjust the equipment to produce a single burst of the Short Pulse Radar Type 0 at the center frequency of the EUT Operating Channel at the specified DFS Detection Threshold level.
(2) Set the EUT up as a standalone device (no associated Client or Master, as appropriate) and no traffic. Frame based systems will be set to a talk/listen ratio of 0%/100% during this test.
(3) Generate a single radar burst, and note the response of the EUT. Repeat for a minimum of 10 trials. The EUT must detect the Radar Waveform using the specified U-NII Detection Bandwidth criterion.
(4) Starting at the center frequency of the EUT operating Channel, increase the radar frequency in 5 MHz steps, repeating the above test sequence, until the detection rate falls below the U-NII Detection Bandwidth criterion specified in report clause 2.3. Repeat this measurement in 1MHz steps at frequencies 5 MHz below where the detection rate begins to fall. Record the highest frequency (denote as F_H) at which detection is greater than or equal to the U-NII Detection Bandwidth criterion. Recording the detection rate at frequencies above FH is not required to demonstrate compliance.
(5) Starting at the center frequency of the EUT operating Channel, decrease the radar frequency in 5 MHz steps, repeating the above test sequence, until the detection rate falls below the U-NII Detection Bandwidth criterion specified in report clause 2.3. Repeat this measurement in 1MHz steps at frequencies 5 MHz above where the detection rate begins to fall. Record the lowest frequency (denote as F_L) at which detection is greater than or equal to the U-NII Detection Bandwidth criterion. Recording the detection rate at frequencies below FL is not required to demonstrate compliance.
(6) The U-NII Detection Bandwidth is calculated as follows:
U-NII Detection Bandwidth = $F_H - F_L$

3.2.3 Test Setup

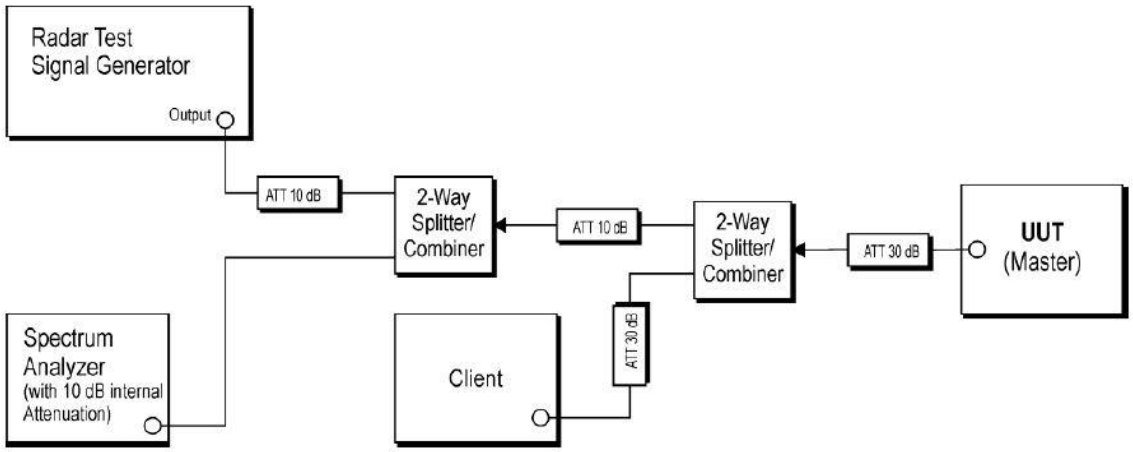

3.2.4 Test Deviation

There is no deviation with the original standard.

3.2.5 Result of U-NII Detection Bandwidth

<160MHz / 5570MHz >

Frequency (MHz)	Fc	Trial Number (Detection = V, No Detection = N)										Rate (%)	F_H/F_L
		1	2	3	4	5	6	7	8	9	10		
5489	-81	N	N	N	N	N	N	N	N	N	N	0	
5490	-80	Y	Y	Y	Y	Y	Y	Y	Y	Y	Y	100	F_L
5491	-79	Y	Y	Y	Y	Y	Y	Y	Y	Y	Y	100	
5492	-78	Y	Y	Y	Y	Y	Y	Y	Y	Y	Y	100	
5493	-77	Y	Y	Y	Y	Y	Y	Y	Y	Y	Y	100	
5494	-76	Y	Y	Y	Y	Y	Y	Y	Y	Y	Y	100	
5495	-75	Y	Y	Y	Y	Y	Y	Y	Y	Y	Y	100	
5500	-70	Y	Y	Y	Y	Y	Y	Y	Y	Y	Y	100	
5505	-65	Y	Y	Y	Y	Y	Y	Y	Y	Y	Y	100	
5510	-60	Y	Y	Y	Y	Y	Y	Y	Y	Y	Y	100	
5515	-55	Y	Y	Y	Y	Y	Y	Y	Y	Y	Y	100	
5520	-50	Y	Y	Y	Y	Y	Y	Y	Y	Y	Y	100	
5530	-40	Y	Y	Y	Y	Y	Y	Y	Y	Y	Y	100	
5540	-30	Y	Y	Y	Y	Y	Y	Y	Y	Y	Y	100	
5550	-20	Y	Y	Y	Y	Y	Y	Y	Y	Y	Y	100	
5560	-10	Y	Y	Y	Y	Y	Y	Y	Y	Y	Y	100	
5570	0	Y	Y	Y	Y	Y	Y	Y	Y	Y	Y	100	
5580	+10	Y	Y	Y	Y	Y	Y	Y	Y	Y	Y	100	
5590	+20	Y	Y	Y	Y	Y	Y	Y	Y	Y	Y	100	
5600	+30	Y	Y	Y	Y	Y	Y	Y	Y	Y	Y	100	
5610	+40	Y	Y	Y	Y	Y	Y	Y	Y	Y	Y	100	
5620	+50	Y	Y	Y	Y	Y	Y	Y	Y	Y	Y	100	
5625	+55	Y	Y	Y	Y	Y	Y	Y	Y	Y	Y	100	
5630	+60	Y	Y	Y	Y	Y	Y	Y	Y	Y	Y	100	
5635	+65	Y	Y	Y	Y	Y	Y	Y	Y	Y	Y	100	
5640	+70	Y	Y	Y	Y	Y	Y	Y	Y	Y	Y	100	
5645	+75	Y	Y	Y	Y	Y	Y	Y	Y	Y	Y	100	
5646	+76	Y	Y	Y	Y	Y	Y	Y	Y	Y	Y	100	
5647	+77	Y	Y	Y	Y	Y	Y	Y	Y	Y	Y	100	
5648	+78	Y	Y	Y	Y	Y	Y	Y	Y	Y	Y	100	
5649	+79	Y	Y	Y	Y	Y	Y	Y	Y	Y	Y	100	
5650	+80	Y	Y	Y	Y	Y	Y	Y	Y	Y	Y	100	F_H
5651	+81	N	N	N	N	N	N	N	N	N	N	0	

Detection Bandwidth = F_H – F_L =**5650** – **5490** = **160** MHz

EUT 99% Bandwidth = **157.916** MHz (Refer to channel 114)

3.3 Channel Availability Check (7.8.2)

3.3.1 Limit of Channel Availability Check

The Initial Channel Availability Check Time tests that the EUT does not emit beacon, control, or data signals on the test Channel until the power-up sequence has been completed and the U-NII device checks for radar waveforms for one minute on the test Channel.

3.3.2 Test Procedures

3.4.2.1 Initial Channel Availability Check Time

This test does not use any radar waveforms and only needs to be performed one time.

(1) The U-NII devices will be powered on and be instructed to operate on the appropriate U-NII Channel that must incorporate DFS functions. At the same time the EUT is powered on, the spectrum analyzer will be set to zero span mode with a 3 MHz RBW and 3 MHz VBW on the Channel occupied by the radar (Chr) with a 2.5 minute sweep time. The spectrum analyzer's sweep will be started at the same time power is applied to the U-NII device.
(2) The EUT should not transmit any beacon or data transmissions until at least 1 minute after the completion of the power-on cycle.

3.4.2.2 Radar Burst at the Beginning of the Channel Availability Check Time

The steps below define the procedure to verify successful radar detection on the test Channel during a period equal to the Channel Availability Check Time and avoidance of operation on that Channel when a radar Burst with a level equal to the DFS Detection Threshold + 1 dB occurs at the beginning of the Channel Availability Check Time. This is illustrated in Figure 15.

(1) The Radar Waveform generator and EUT are connected using the applicable test setup and the power of the EUT is switched off.
(2) The EUT is powered on at T0. T1 denotes the instant when the EUT has completed its power-up sequence (Tpower_up). The Channel Availability Check Time commences on Chr at instant T1 and will end no sooner than T1 + Tch_avail_check.
(3) A single Burst of one of the Short Pulse Radar Types 1-4 will commence within a 6 second window starting at T1. An additional 1 dB is added to the radar test signal to ensure it is at or above the DFS Detection Threshold, accounting for equipment variations/errors.
(4) Visual indication or measured results on the EUT of successful detection of the radar Burst will be recorded and reported. Observation of Chr for EUT emissions will continue for 2.5 minutes after the radar Burst has been generated.
(5) Verify that during the 2.5 minute measurement window no EUT transmissions occurred on Chr. The Channel Availability Check results will be recorded.

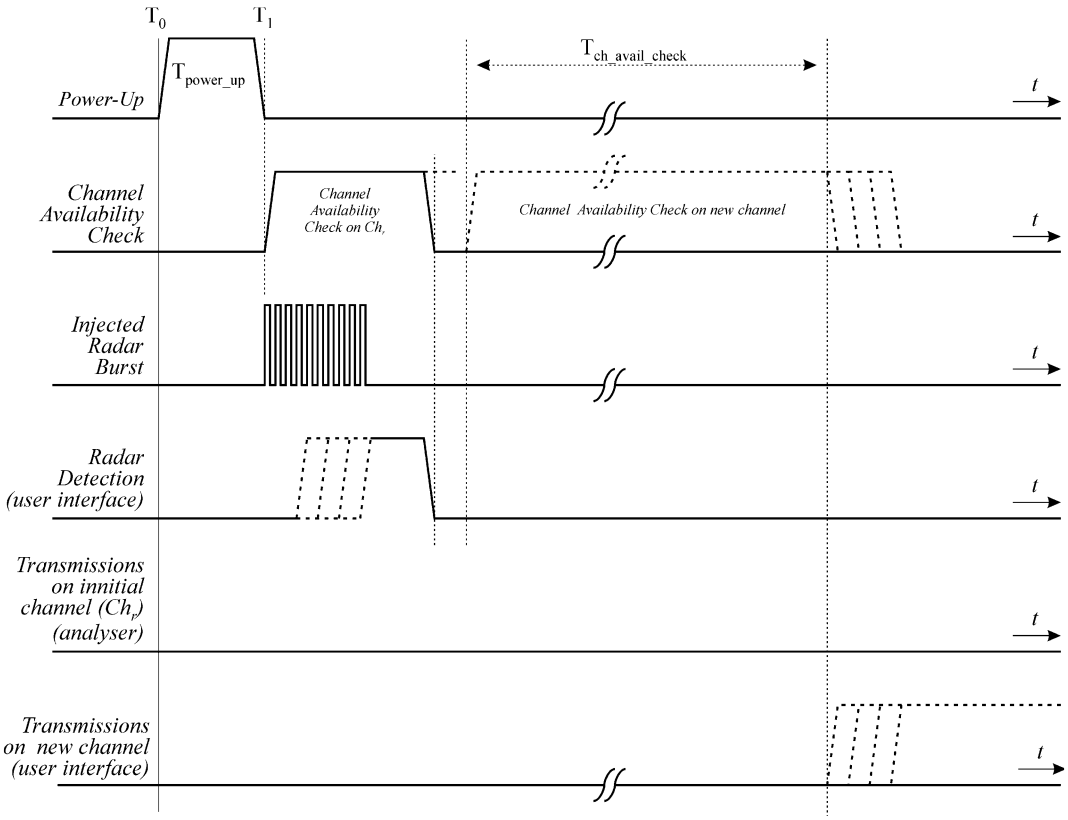

Figure 15: Example of timing for radar testing at the beginning of the Channel Availability Check Time

3.4.2.3 Radar Burst at the End of the Channel Availability Check Time

The steps below define the procedure to verify successful radar detection on the test Channel during a period equal to the Channel Availability Check Time and avoidance of operation on that Channel when a radar Burst with a level equal to the DFS Detection Threshold + 1dB occurs at the end of the Channel Availability Check Time. This is illustrated in Figure 16.

(1) The Radar Waveform generator and EUT are connected using the applicable test setup and the power of the EUT is switched off.
(2) The EUT is powered on at T0. T1 denotes the instant when the EUT has completed its power-up sequence (Tpower_up). The Channel Availability Check Time commences on Chr at instant T1 and will end no sooner than T1 + Tch_avail_check.
(3) A single Burst of one of the Short Pulse Radar Types 1-4 will commence within a 6 second window starting at T1 + 54 seconds. An additional 1 dB is added to the radar test signal to ensure it is at or above the DFS Detection Threshold, accounting for equipment variations/errors.
(4) Visual indication or measured results on the EUT of successful detection of the radar Burst will be recorded and reported. Observation of Chr for EUT emissions will continue for 2.5 minutes after the radar Burst has been generated.
(5) Verify that during the 2.5 minute measurement window no EUT transmissions occurred on Chr. The Channel Availability Check results will be recorded.

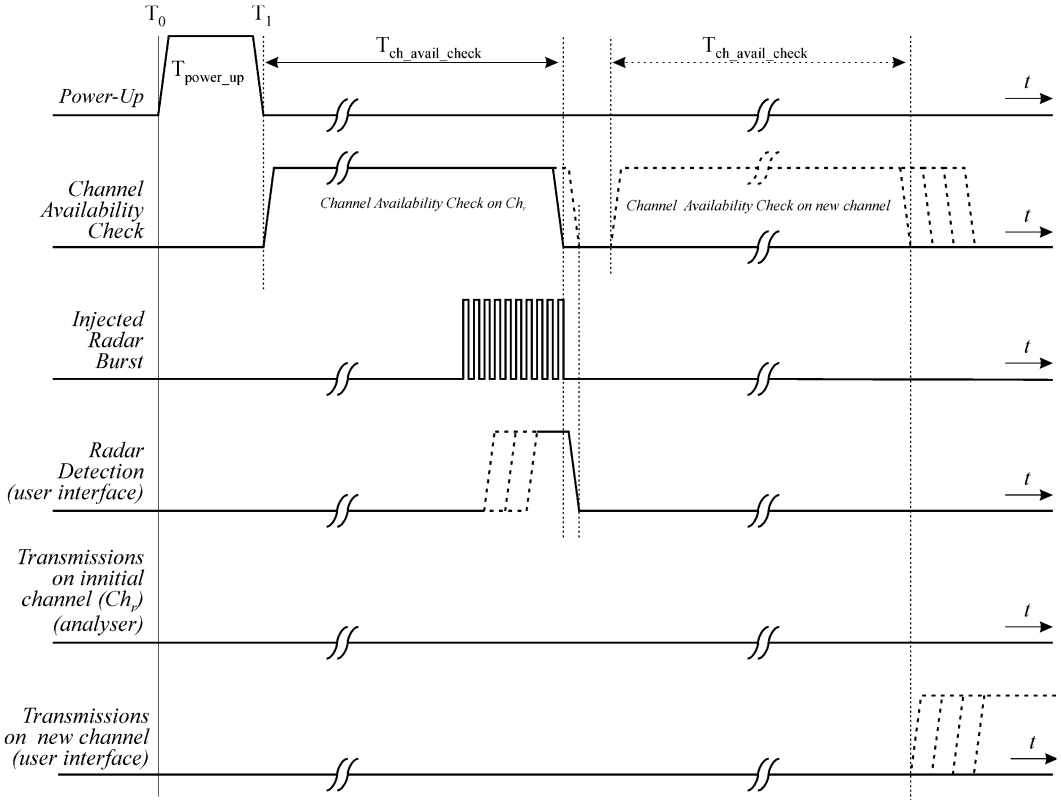

Figure 16: Example of timing for radar testing towards the end of the Channel Availability Check Time

3.3.3 Test Setup

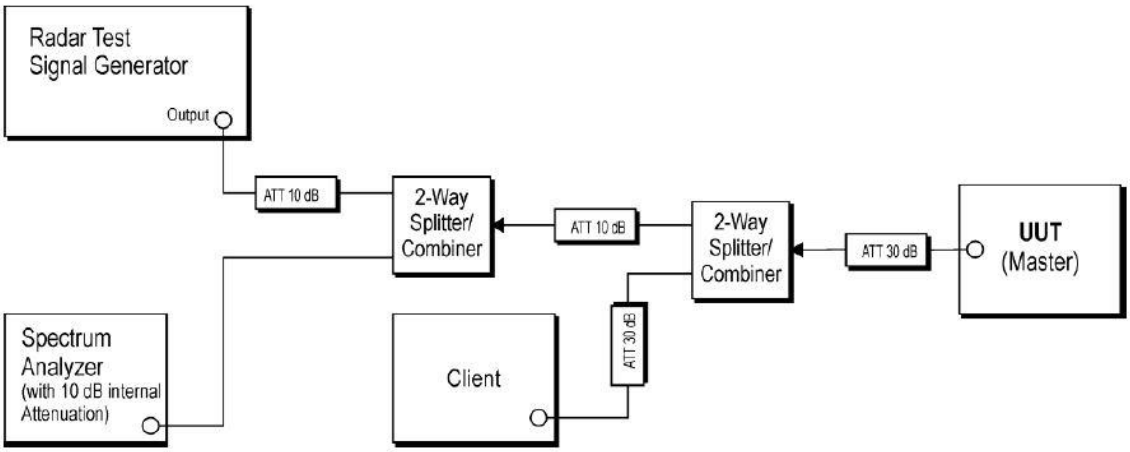

3.3.4 Test Deviation

There is no deviation with the original standard.

3.3.5 Result of Channel Availability Check Time

<160MHz / 5570MHz>

EUT Power up and Initial Channel Availability Check Time	
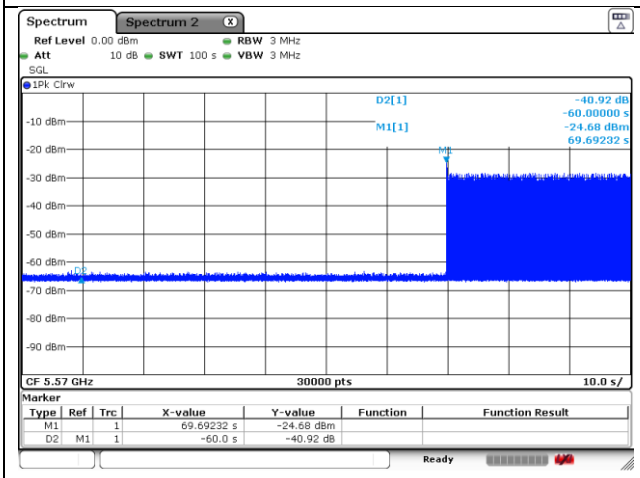	
Radar Burst at the Beginning of the Channel Availability Check Time	**Radar Burst at the End of the Channel Availability Check Time**
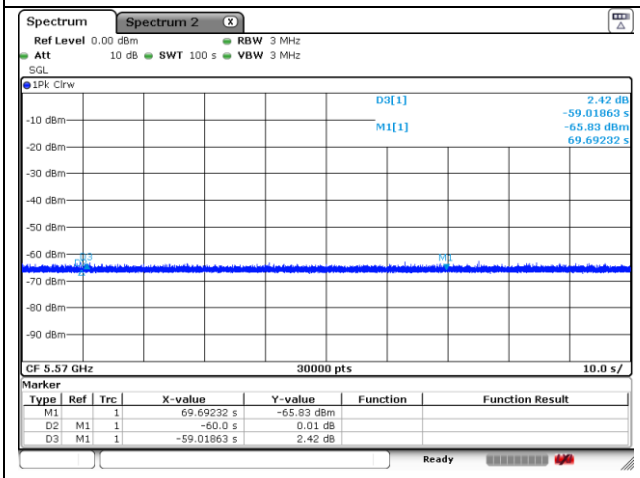	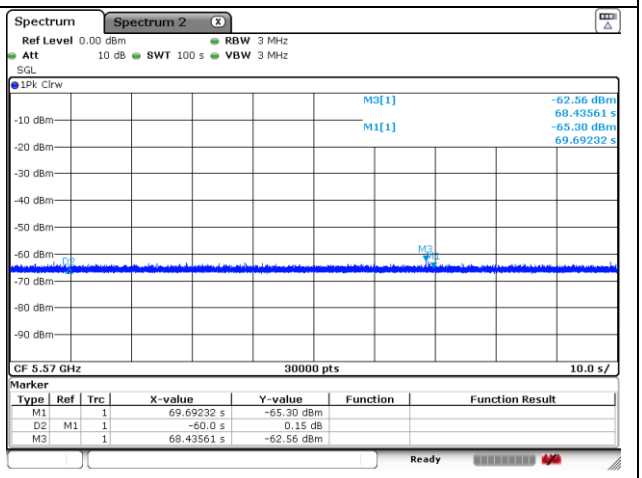

3.4 In-Service Monitoring: Channel Move Time, Channel Closing Transmission Time and Non-Occupancy Period (7.8.3)

3.4.1 Limit of In-Service Monitoring

The EUT has In-Service Monitoring function to continuously monitor the radar signals, If radar is detected, it must leave the channel (Shutdown). The Channel Move Time to cease all transmissions on the current Channel upon detection of a Radar Waveform above the DFS Detection Threshold within 10 sec. The total duration of Channel Closing Transmission Time is comprised of 200 milliseconds starting at the beginning of the Channel Move Time plus any additional intermittent control signals required to facilitate Channel changes (an aggregate of 60 milliseconds) during the remainder of the 10 second period. The aggregate duration of control signals will not count quiet periods in between transmissions.

Non-Occupancy Period time is 30 minute during which a Channel will not be utilized after a Radar Waveform is detected on that Channel.

3.4.2 Test Procedures

(1) One frequency will be chosen from the Operating Channels of the EUT within the 5250-5350 MHz or 5470-5725 MHz bands. For 802.11 devices, the test frequency must contain control signals. This can be verified by disabling channel loading and monitoring the spectrum analyzer. If no control signals are detected, another frequency must be selected within the emission bandwidth where control signals are detected.

(2) In case the EUT is a Master Device, a U-NII device operating as a Client Device will be used and it is assumed that the Client will associate with the EUT (Master). For radiated tests, the emissions of the Radar Waveform generator will be directed towards the Master Device. If the Master Device has antenna gain, the main beam of the antenna will be directed toward the radar emitter. Vertical polarization is used for testing.

(3) The TCP protocol unicast data stream was generated by the iperf software command line with at least 17% activity ratio over any 100ms period.

(4) Timing plots are reported with calculations demonstrating a minimum channel loading of approximately 17% or greater. For example, channel loading can be estimated by setting the spectrum analyzer for zero span and approximate the Time On/ (Time On + Off Time).

(5) At time T0 the Radar Waveform generator sends a Burst of pulses for one of the Short Pulse Radar Types 1-4 at DFS Detection Threshold levels on the Operating Channel. An additional 1 dB is added to the radar test signal to ensure it is at or above the DFS Detection Threshold, accounting for equipment variations/errors.

(6) Observe the transmissions of the EUT at the end of the radar Burst on the Operating Channel for duration greater than 10 seconds. Measure and record the transmissions from the EUT during the observation time (Channel Move Time). Measure and record the Channel Move Time and Channel Closing Transmission Time if radar detection occurs.

(7) When operating as a Master Device, monitor the EUT for more than 30 minutes following instant T2 to verify that the EUT does not resume any transmissions on this Channel. Perform this test once and record the measurement result.

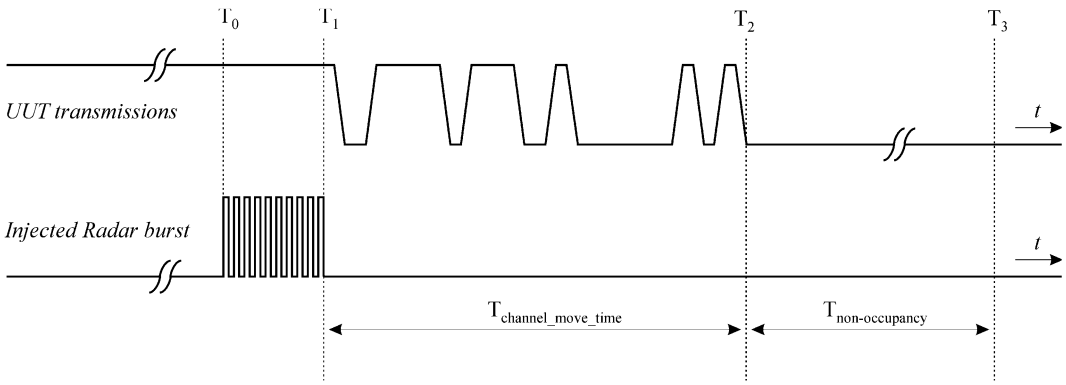

(8) One 12 seconds plot is reported for the Short Pulse Radar Type 0.

(9) Measurement of the aggregate duration of the Channel Closing Transmission Time method. With the spectrum analyzer set to zero span tuned to the center frequency of the EUT operating channel at the radar simulated frequency, peak detection, and max hold, the dwell time per bin is given by: Dwell (0.4ms)= S (12000ms) / B (30000); where Dwell is the dwell time per spectrum analyzer sampling bin, S is the sweep time and B is the number of spectrum analyzer sampling bins. An upper bound of the aggregate duration of the intermittent control signals of Channel Closing Transmission Time is calculated by: C (ms)= N X Dwell (0.4 ms); where C is the Closing Time, N is the number of spectrum analyzer sampling bins (intermittent control signals) showing a U-NII transmission and Dwell is the dwell time per bin.

3.4.3 Test Setup

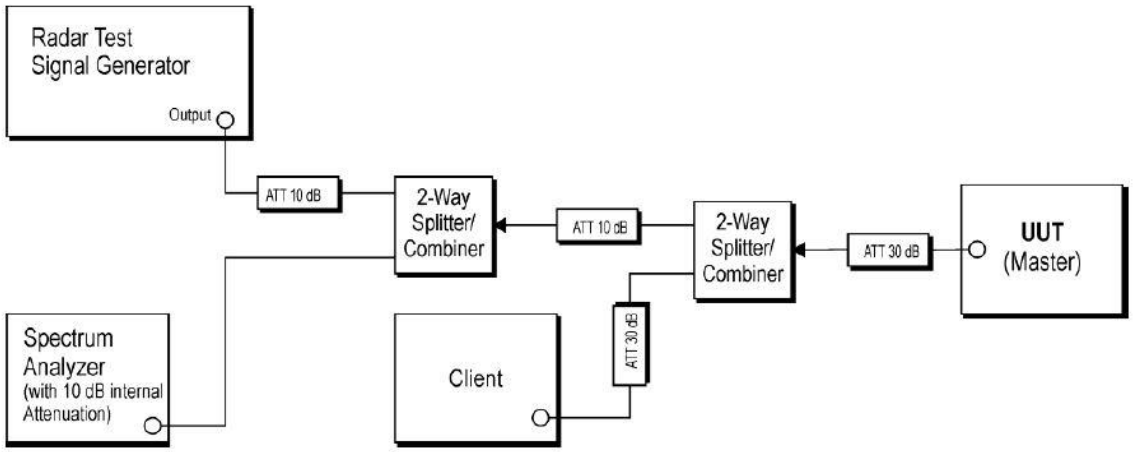

3.4.4 Test Deviation

There is no deviation with the original standard.

3.4.5 Result of Channel Move Time, Channel Closing Transmission Time and Non-Occupancy Period for Client Beacon Test

Test Mode :	Master	**Temperature :**	22.3-23.9℃
Test Engineer :	Eloise	**Relative Humidity :**	46-57%

BW / Channel	Test Item	Test Result	Limit	Pass/Fail
160MHz /5570MHz	Channel Move Time	922.031ms	< 10s	Pass
	Channel Closing Transmission Time	200ms + 4.4 ms	< 260ms	Pass
	Non-Occupancy Period	≥ 30	≥ 30 min	Pass

3.4.6 Channel Move Time, Channel Closing Transmission Time and Non-Occupancy Period Test Plots

<160MHz / 5570MHz > In-Service Monitoring

Channel Move Time &

Channel Closing Transmission Time

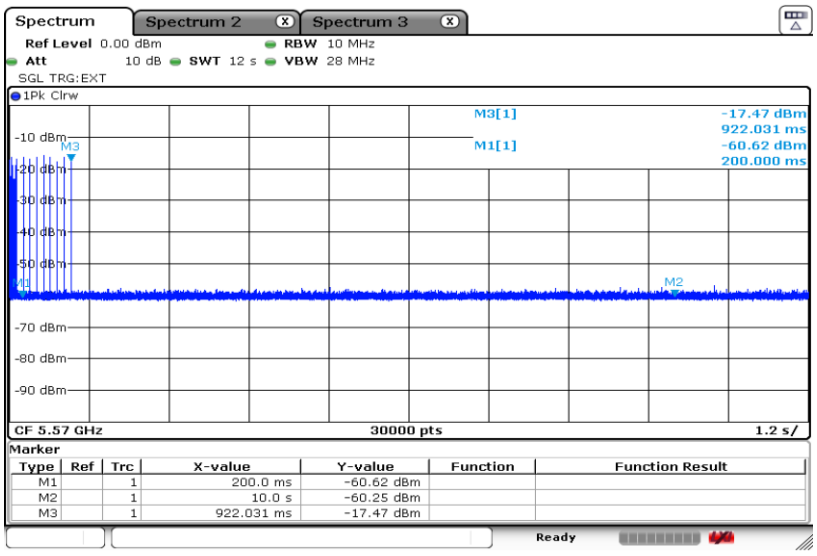

Non-Occupancy Period

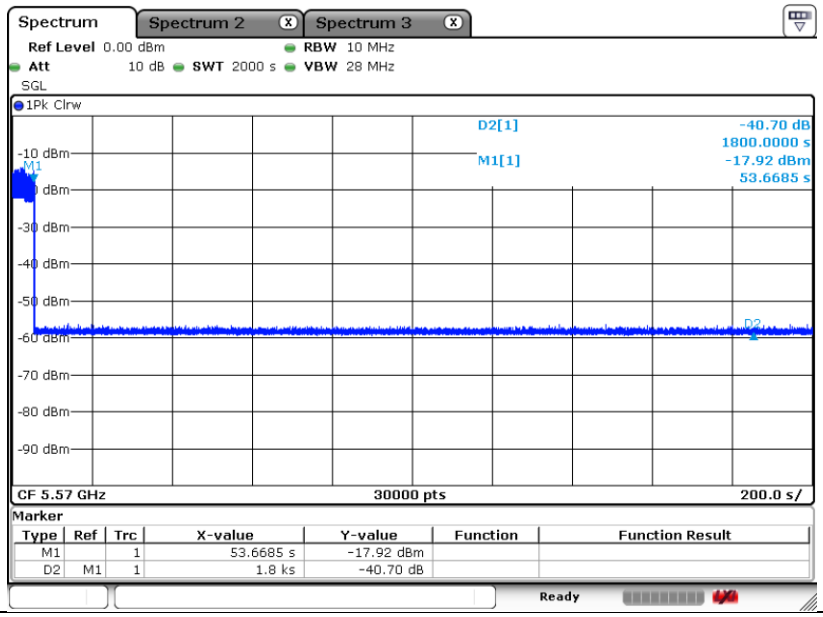

Note:

Dwell (0.4 ms)= Sweep Time (12000 ms) / Sweep Point Bins (30000)

Channel Closing Transmission Time (200 +4.4ms) = 200 + Number (11) X Dwell (0.4 ms) < 260ms

3.4.7 Data Traffic Channel Loading and Noise Floor Plots

EUT data traffic (Master)

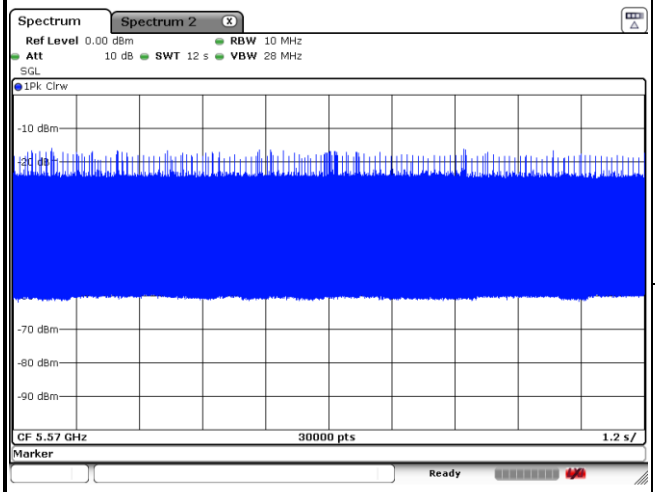

Channel Loading > 17% (Master)

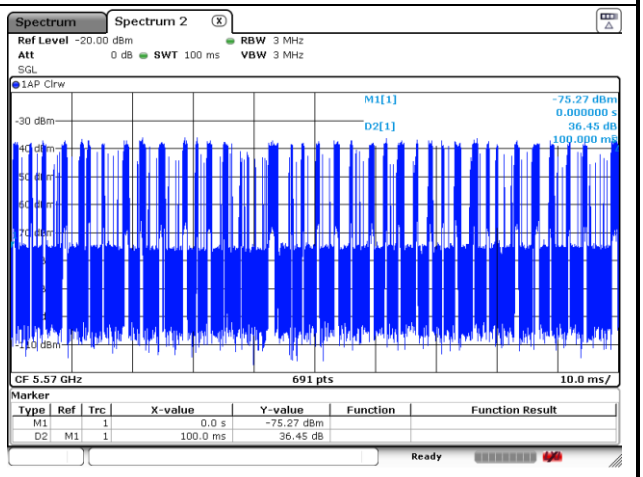

Noise Floor (No transmission)

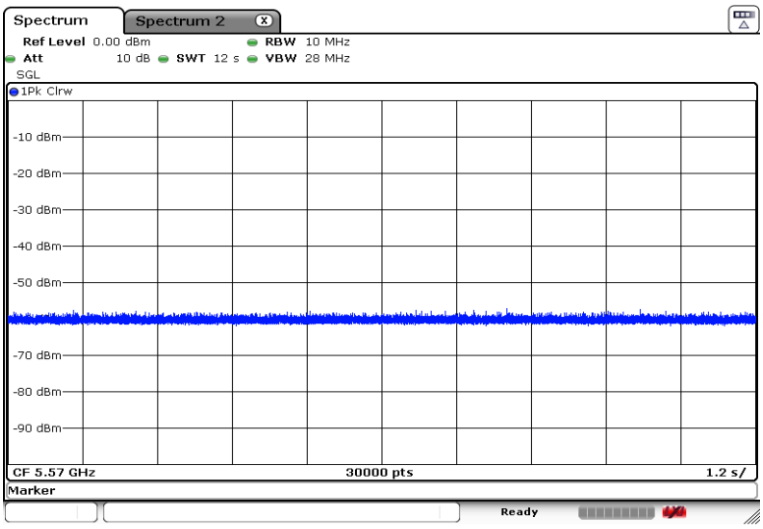

3.5 Statistical Performance Check (7.8.4)

3.5.1 Limit of Statistical Performance Check

Short Pulse Radar Test

Once the performance requirements check is complete, statistical data will be gathered, to determine the ability of the device to detect the radar test waveforms (Short Pulse Radar Types 1-4) found in **Table 5**. The device can utilize a test mode to demonstrate when detection occurs to prevent the need to reset the device between trials. The percentage of successful detection is calculated by:

$$\frac{TotalWaveformDetections}{TotalWaveformTrials} \times 100$$ = Percentage of Successful Detection *Radar Waveform* N = $P_d N$

In addition an aggregate minimum percentage of successful detection across all Short Pulse Radar Types 1-4 is required and is calculated as follows:

$$\frac{P_d 1 + P_d 2 + P_d 3 + P_d 4}{4}$$

The minimum number of trails, minimum percentage of successful detection and the aggregate minimum percentage of successful detection are found in **Table 5**.

Table 5 – Short Pulse Radar Test Waveforms

Radar Type	Pulse Width (µsec)	PRI (µsec)	Number of Pulses	Minimum Percentage of Successful Detection	Minimum Number of Trials
1	1	1428	18	60%	30
2	1-5	150-230	23-29	60%	30
3	6-10	200-500	16-18	60%	30
4	11-20	200-500	12-16	60%	30
Aggregate (Radar Types 1-4)				80%	120

A minimum of 30 unique waveforms are required for each of the Short Pulse Radar Types 1 through 4. For Short Pulse Radar Type 0, the same waveform is used a minimum of 30 times. If more than 30 waveforms are used for Short Pulse Radar Types 1 through 4, then each additional waveform must also be unique and not repeated from the previous waveforms.

Radar Type	Number of Trials	Number of Successful Detections	Minimum Percentage of Successful Detection
1	35	29	82.9%
2	30	18	60%
3	30	27	90%
4	50	44	88%
Aggregate (82.9% + 60% + 90% + 88%)/4 = 80.2%			

Long Pulse Radar Test

Statistical data will be gathered to determine the ability of the device to detect the Long Pulse Radar Type 5 found in **Table 6**. The device can utilize a test mode to demonstrate when detection occurs to prevent the need to reset the device between trials.

Table 6 – Long Pulse Radar Test Waveform

Radar Type	Pulse Width (µsec)	Chirp Width (MHz)	PRI (µsec)	Number of Pulses per *Burst*	Number of *Bursts*	Minimum Percentage of Successful Detection	Minimum Number of Trials
5	50-100	5-20	1000-2000	1-3	8-20	80%	30

The parameters for this waveform are randomly chosen. Thirty unique waveforms are required for the Long Pulse Radar Type waveforms. If more than 30 waveforms are used for the Long Pulse Radar Type waveforms, then each additional waveform must also be unique and not repeated from the previous waveforms.

Three subsets of trials will be performed with a minimum of ten trials per subset.
The subset of trials differs in where the Long Pulse Type 5 Signal is tuned in frequency:
a) The Channel center frequency (subset case 1).
b) Tuned frequencies such that 90% of the Long Pulse Type 5 frequency modulation is within the low edge of the UUT Occupied Bandwidth (subset case 2).
c) Tuned frequencies such that 90% of the Long Pulse Type 5 frequency modulation is within the high edge of the UUT Occupied Bandwidth (subset case 3).

For subset case 1: the center frequency of the signal generator will remain fixed at the center of the UUT Channel.
For subset case 2: to retain 90% frequency overlap between the radar signal and the UUT Occupied Bandwidth, the center frequency of the signal generator will vary for each of the ten trials in subset case 2. The center frequency of the signal generator for each trial is calculated by: $FL + (0.4 * Chirp\ Width\ [in\ MHz])$
For subset case 3: to retain 90% frequency overlap between the radar signal and the UUT Occupied Bandwidth, the center frequency of the signal generator will vary for each of the ten trials in subset case 3. The center frequency of the signal generator for each trial is calculated by: $FH - (0.4 * Chirp\ Width\ [in\ MHz])$

a) Channel center frequency (subset case 1)

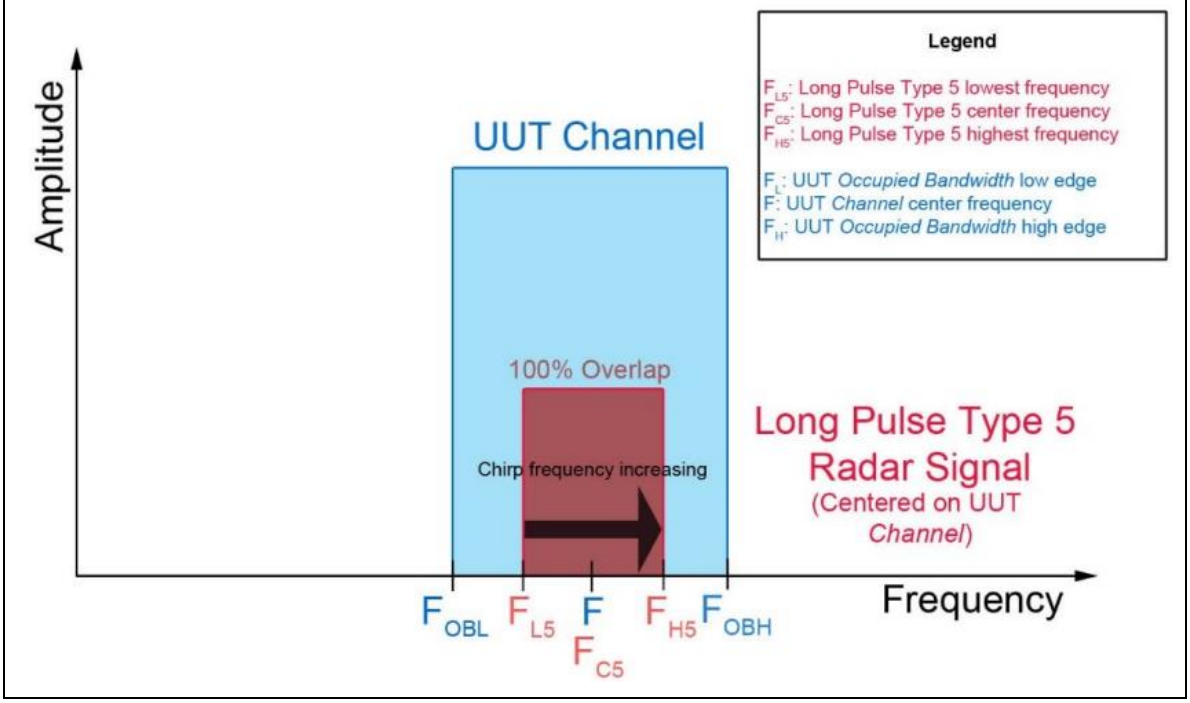

b) Tuned frequencies such that 90% of the Long Pulse Type 5 frequency modulation is within the low edge of the UUT Occupied Bandwidth. (subset case 2)

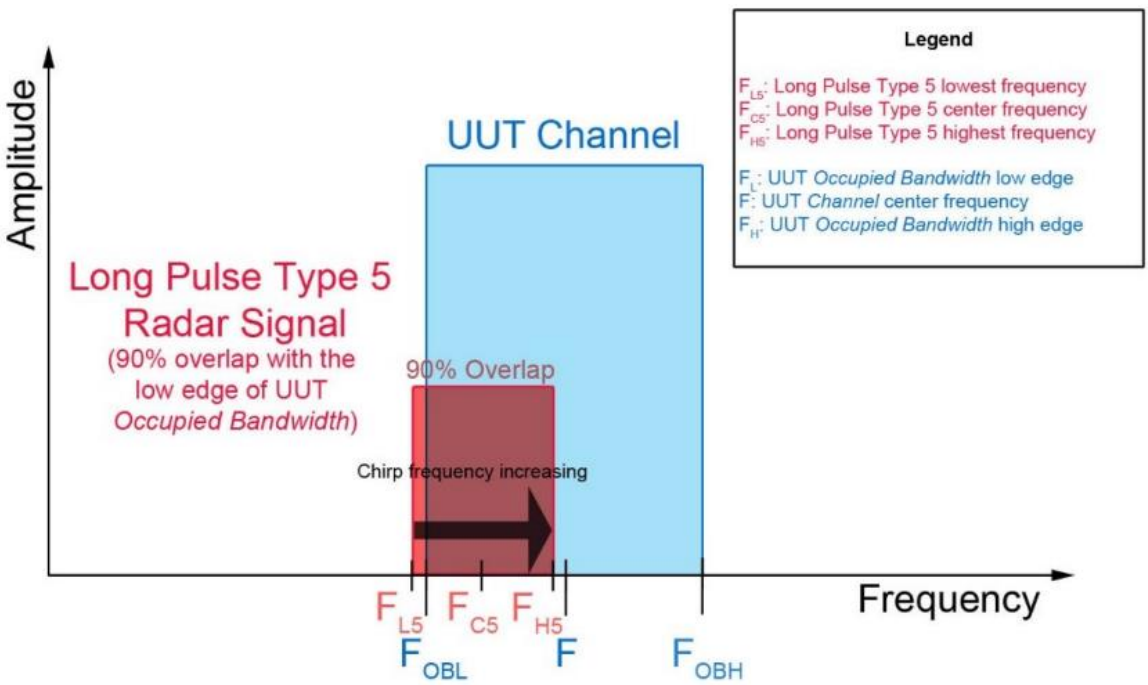

c) Tuned frequencies such that 90% of the Long Pulse Type 5 frequency modulation is within the high edge of the UUT Occupied Bandwidth. (subset case 3)

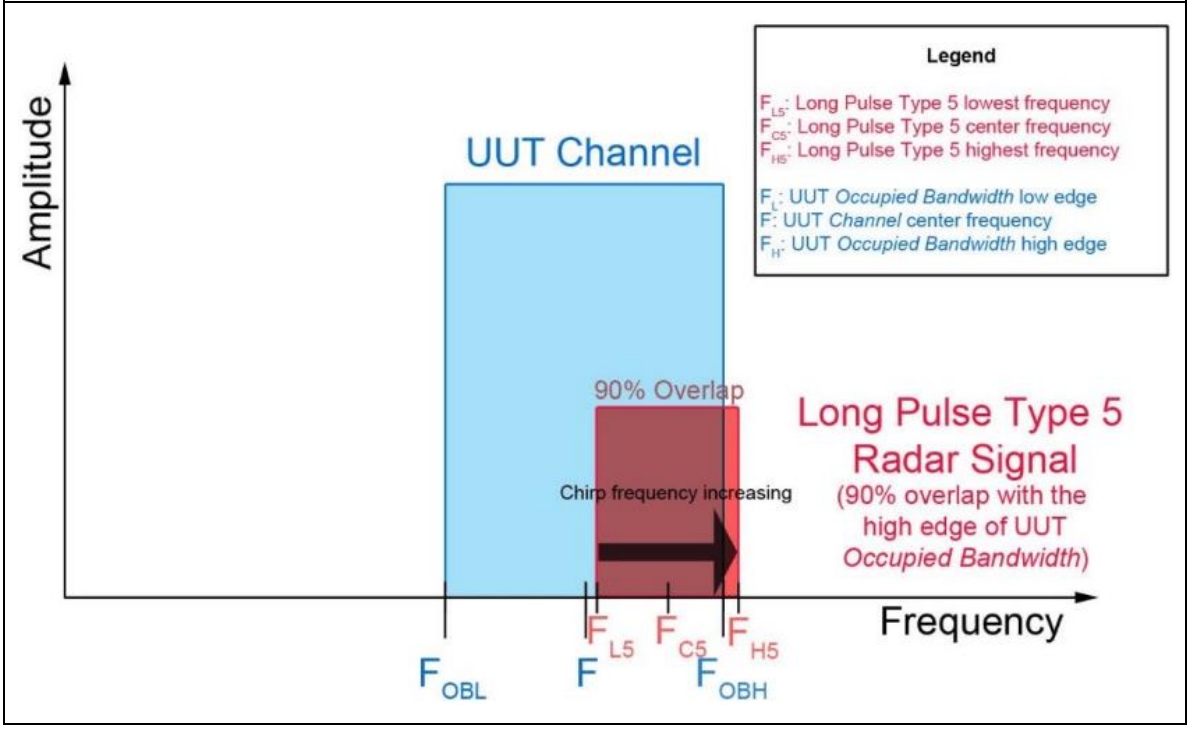

The percentage of successful detection is calculated by:

$$\frac{TotalWaveformDetections}{TotalWaveformTrials} \times 100$$

Frequency Hopping Radar Test

Statistical data will be gathered to determine the ability of the device to detect the Frequency Hopping radar test signal (radar type 6) found in **Table 7**. The device can utilize a test mode to demonstrate when detection occurs to prevent the need to reset the device between trial runs. The probability of successful detection is calculated by:

$$\frac{TotalWaveformDetections}{TotalWaveformTrials} \times 100$$

Table 7 – Frequency Hopping Radar Test Waveform

Radar Type	Pulse Width (µsec)	PRI (µsec)	Pulses per Hop	Hopping Rate (kHz)	Hopping Sequence Length (msec)	Minimum Percentage of Successful Detection	Minimum Number of Trials
6	1	333	9	0.333	300	70%	30

For the Frequency Hopping Radar Type, the same *Burst* parameters are used for each waveform. The hopping sequence is different for each waveform and a 100-length segment is selected from the hopping sequence defined by the following algorithm:

The first frequency in a hopping sequence is selected randomly from the group of 475 integer frequencies from 5250 – 5724 MHz. Next, the frequency that was just chosen is removed from the group and a frequency is randomly selected from the remaining 474 frequencies in the group. This process continues until all 475 frequencies are chosen for the set. For selection of a random frequency, the frequencies remaining within the group are always treated as equally likely.

3.5.2 Test Procedures

(1) One frequency will be chosen from the Operating Channels of the EUT within the 5250-5350 MHz or 5470-5725 MHz bands.
(2) In case the EUT is a Master Device, a U-NII device operating as a Client Device will be used and it is assumed that the Client will associate with the EUT (Master). If the Master Device has antenna gain, the main beam of the antenna will be directed toward the radar emitter. Vertical polarization is used for testing.
(3) The TCP protocol unicast data stream was generated by the iperf software command line with at least 17% activity ratio over any 100ms period.
(4) At time T0 the Radar Waveform generator sends a Burst of pulses for each of the Radar Types 1-6 at DFS Detection Threshold levels on the Operating Channel. An additional 1 dB is added to the radar test signal to ensure it is at or above the DFS Detection Threshold, accounting for equipment variations/errors.
(5) Observe the transmissions of the EUT at the end of the Burst on the Operating Channel for duration greater than 10 seconds for Short Pulse Radar Types 1-4 and 6 to ensure detection occurs.
(6) Observe the transmissions of the EUT at the end of the Burst on the Operating Channel for duration greater than 22 seconds for Long Pulse Radar Type 5 to ensure detection occurs.

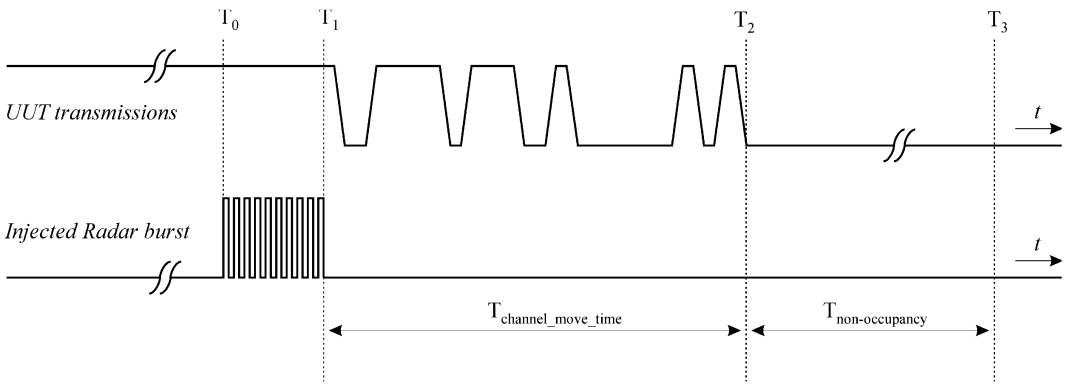

3.5.3 Test Setup

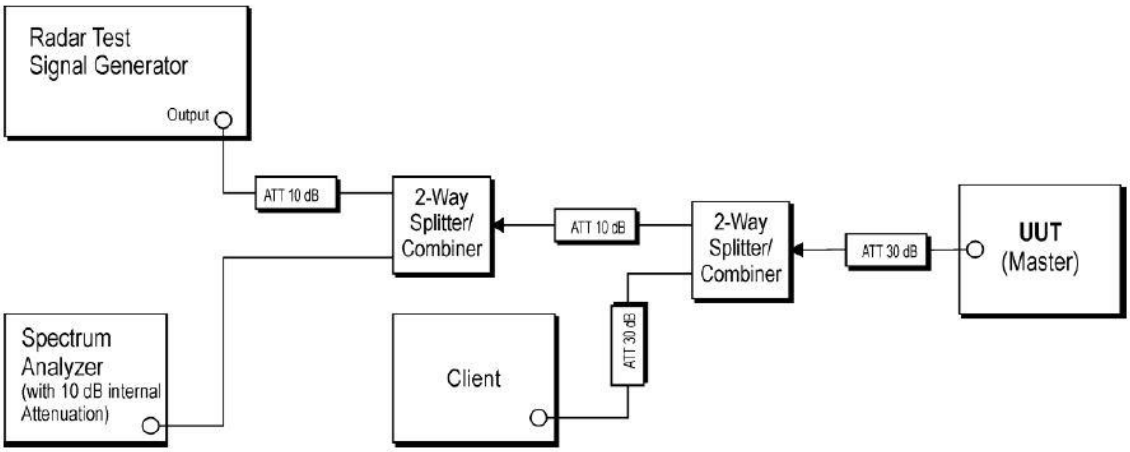

3.5.4 Test Deviation

There is no deviation with the original standard.

3.5.5 Result of Statistical Performance Check

<160MHz / 5570MHz>

(Detection = Y, No Detection = N)						
Trial Number	**Type 1**	**Type 2**	**Type 3**	**Type 4**	**Type 5**	**Type 6**
1	Y	Y	Y	Y	Y	Y
2	Y	Y	Y	Y	Y	Y
3	Y	Y	Y	Y	Y	Y
4	Y	Y	Y	Y	Y	Y
5	Y	Y	Y	Y	Y	Y
6	Y	Y	Y	Y	Y	Y
7	Y	Y	Y	Y	Y	Y
8	Y	Y	Y	Y	Y	Y
9	Y	Y	Y	Y	Y	Y
10	Y	Y	Y	Y	Y	Y
11	Y	Y	Y	Y	Y	Y
12	Y	Y	Y	Y	Y	Y
13	Y	Y	Y	Y	Y	Y
14	Y	Y	Y	Y	Y	Y
15	Y	Y	Y	Y	Y	Y
16	Y	Y	Y	Y	Y	Y
17	Y	Y	Y	Y	Y	Y
18	Y	Y	Y	Y	Y	Y
19	Y	Y	Y	Y	Y	Y
20	Y	Y	Y	Y	Y	Y
21	Y	Y	Y	Y	Y	Y
22	Y	Y	Y	Y	Y	Y
23	Y	Y	Y	Y	Y	Y
24	Y	Y	Y	Y	Y	Y
25	Y	Y	Y	Y	Y	Y
26	Y	Y	Y	Y	Y	Y
27	Y	Y	Y	Y	Y	Y
28	Y	Y	Y	Y	Y	Y
29	Y	Y	Y	Y	Y	Y
30	Y	Y	Y	Y	Y	Y
Trial of Detection	30/30	30/30	30/30	30/30	30/30	30/30
Probability (%)	100%	100%	100%	100%	100%	100%
Limit (%)	>= 60%	>= 60%	>= 60%	>= 60%	>= 80%	>= 70%
Average Probability of Radar Type 1~4 (%)			100% (>=80%)			

4 List of Measuring Equipment

Instrument	Manufacturer	Model No.	Serial No.	Characteristics	Calibration Date	Test Date	Due Date	Remark
Spectrum Analyzer	R&S	FSV7	101632	10Hz~7GHz	Jan. 03, 2024	Sep. 28, 2024	Jan. 02, 2025	DFS (DFS01-KS)
Signal Generator	KEYSIGHT	N5172B	MY53050604	9KHz~6GHz	Jan. 03, 2024	Sep. 28, 2024	Jan. 02, 2025	DFS (DFS01-KS)

5 Measurement Uncertainty

The measurement uncertainties shown below were calculated in accordance with the requirements of ANSI 63.10-2013. All the measurement uncertainty value were shown with a coverage K=2 to indicate 95% level of confidence. The measurement data show herein meets or exceeds the CISPR measurement uncertainty values specified in CISPR 16-4-2 and can be compared directly to specified limit to determine compliance.

Uncertainty of Conducted Measurement

Conducted Generated signal Levels	**±0.56 dB**
Conducted Time	**0.38%**

---------- THE END ----------

Appendix A. Radar Parameters

Report Number : FZ482209

DFS Radar Parameters
FCC Radar Type 1
Channel 114 Bandwidth 160MHz

Trial #	Pulse Repetition Frequency Number (1 to 23)	Pulse Repetition Frequency (Pulses Per Second)	Pulse Repetition Interval (Microseconds)	Detection (Yes / No)
1	22	1066.10	938	Y
2	10	1432.66	698	Y
3	6	1618.12	618	Y
4	2	1858.74	538	Y
5	19	1138.95	878	Y
6	12	326.16	3066	Y
7	7	1567.40	638	Y
8	21	1089.32	918	Y
9	17	1193.32	838	Y
10	18	1165.50	858	Y
11	15	1253.13	798	Y
12	11	1392.76	718	Y
13	4	1730.10	578	Y
14	5	1672.24	598	Y
15	3	1792.11	558	Y
16		394.32	2536	Y
17		1035.20	966	Y
18		1209.19	827	Y
19		399.84	2501	Y
20		385.36	2595	Y
21		897.67	1114	Y
22		768.05	1302	Y
23		328.41	3045	Y
24		615.76	1624	Y
25		347.46	2878	Y
26		973.71	1027	Y
27		402.41	2485	Y
28		625.00	1600	Y
29		853.24	1172	Y
30		849.62	1177	Y

Report Number : FZ482209

DFS Radar Parameters
FCC Radar Type 2
Channel 114 Bandwidth 160MHz

Trial #	Number Pulses per Burst	Pulse Width (Microseconds)	Pulse Repetition Interval (Microseconds)	Detection (Yes / No)
1	26	3.20	179	Y
2	23	1.10	207	Y
3	24	2.10	230	Y
4	29	4.80	200	Y
5	28	3.90	214	Y
6	26	2.90	222	Y
7	26	3.20	204	Y
8	25	2.50	192	Y
9	26	3.10	164	Y
10	23	1.20	156	Y
11	27	3.90	210	Y
12	29	4.60	201	Y
13	26	3.20	162	Y
14	25	2.20	197	Y
15	29	4.50	163	Y
16	26	3.00	203	Y
17	29	5.00	168	Y
18	25	2.40	217	Y
19	26	2.90	191	Y
20	25	2.30	166	Y
21	27	3.70	150	Y
22	25	2.20	176	Y
23	29	4.90	195	Y
24	26	2.90	202	Y
25	25	2.50	178	Y
26	23	1.10	206	Y
27	27	3.80	155	Y
28	29	4.70	157	Y
29	25	2.40	224	Y
30	28	4.20	159	Y

Report Number : FZ482209

DFS Radar Parameters
FCC Radar Type 3
Channel 114 Bandwidth 160MHz

Trial #	Number Pulses per Burst	Pulse Width (Microseconds)	Pulse Repetition Interval (Microseconds)	Detection (Yes / No)
1	17	8.20	355	Y
2	16	6.10	487	Y
3	16	7.10	344	Y
4	18	9.80	288	Y
5	18	8.90	230	Y
6	17	7.90	432	Y
7	17	8.20	207	Y
8	17	7.50	443	Y
9	17	8.10	439	Y
10	16	6.20	223	Y
11	18	8.90	208	Y
12	18	9.60	463	Y
13	17	8.20	441	Y
14	16	7.20	323	Y
15	18	9.50	297	Y
16	17	8.00	412	Y
17	18	10.00	324	Y
18	17	7.40	271	Y
19	17	7.90	349	Y
20	16	7.30	409	Y
21	18	8.70	373	Y
22	16	7.20	254	Y
23	18	9.90	274	Y
24	17	7.90	278	Y
25	17	7.50	317	Y
26	16	6.10	260	Y
27	18	8.80	211	Y
28	18	9.70	272	Y
29	17	7.40	264	Y
30	18	9.20	284	Y

Report Number : FZ482209

DFS Radar Parameters
FCC Radar Type 4
Channel 114 Bandwidth 160MHz

Trial #	Number Pulses per Burst	Pulse Width (Microseconds)	Pulse Repetition Interval (Microseconds)	Detection (Yes / No)
1	14	16.00	355	Y
2	12	11.30	487	Y
3	13	13.50	344	Y
4	16	19.40	288	Y
5	15	17.50	230	Y
6	14	15.30	432	Y
7	14	15.90	207	Y
8	13	14.30	443	Y
9	14	15.80	439	Y
10	12	11.50	223	Y
11	15	17.40	208	Y
12	16	19.00	463	Y
13	14	16.00	441	Y
14	13	13.80	323	Y
15	16	18.90	297	Y
16	14	15.50	412	Y
17	16	19.90	324	Y
18	13	14.10	271	Y
19	14	15.20	349	Y
20	13	13.80	409	Y
21	15	17.10	373	Y
22	13	13.80	254	Y
23	16	19.80	274	Y
24	14	15.30	278	Y
25	13	14.50	317	Y
26	12	11.30	260	Y
27	15	17.30	211	Y
28	16	19.20	272	Y
29	13	14.20	264	Y
30	15	18.20	284	Y

Report Number : FZ482209

DFS Radar Parameters
FCC Radar Type 5
Channel 114 Bandwidth 160MHz

Trial Number:			1			Detection (Yes/No)
Number of Bursts in Trial:			15			
Chirp Center Frequency:			5310			Y
Burst	Number of Pulses	Pulse Width (Microseconds)	Chirp Width (MHz)	Pulse 1-to-2 Spacing (µsec)	Pulse 2-to-3 Spacing (µsec)	Starting Location Within Interval (µsec)
1	2	77.8	13	1477	1665	636185
2	1	51.9	13	-	1074	32674
3	1	63.8	13	-	1584	226294
4	3	96.6	13	1786	1682	417976
5	3	85.9	13	1215	1795	611152
6	2	73.7	13	1549	1198	8789
7	2	77.2	13	1819	1837	201917
8	2	68.4	13	1114	1587	395530
9	2	76.7	13	1155	2000	588564
10	1	53.2	13	-	1147	783794
11	3	85.7	13	1695	1433	177933
12	3	94.3	13	1426	1670	370624
13	2	77.6	13	1671	1294	564893
14	1	65.7	13	-	1512	759583
15	3	93.5	13	1130	1444	154262
16						
17						
18						
19						
20						

Trial Number:			2			Detection (Yes/No)
Number of Bursts in Trial:			8			
Chirp Center Frequency:			5310			Y
Burst	Number of Pulses	Pulse Width (Microseconds)	Chirp Width (MHz)	Pulse 1-to-2 Spacing (µsec)	Pulse 2-to-3 Spacing (µsec)	Starting Location Within Interval (µsec)
1	2	75	5	1527	1880	653020
2	3	99.4	5	1262	1401	1015643
3	2	67.4	5	1403	1531	1379398
4	2	73.6	5	1041	1449	245489
5	1	65.9	5	-	1432	609113
6	3	83.8	5	1292	1356	970852
7	1	65.5	5	-	1543	1335913
8	3	98.6	5	1796	1548	200406
9						
10						
11						
12						
13						
14						
15						
16						
17						
18						
19						
20						

Report Number : FZ482209

DFS Radar Parameters
FCC Radar Type 5
Channel 114 Bandwidth 160MHz

Trial Number:			3			Detection (Yes/No)
Number of Bursts in Trial:			11			
Chirp Center Frequency:			5310			Y
Burst	Number of Pulses	Pulse Width (Microseconds)	Chirp Width (MHz)	Pulse 1-to-2 Spacing (µsec)	Pulse 2-to-3 Spacing (µsec)	Starting Location Within Interval (µsec)
1	2	73.8	9	1538	1806	409565
2	2	69.5	9	1649	1117	673692
3	1	51.9	9	-	1651	938562
4	3	84.6	9	1032	1976	113209
5	3	95.4	9	1903	1060	376726
6	2	68	9	1351	1368	641212
7	3	89.6	9	1514	1338	903714
8	2	81.9	9	1689	1022	80863
9	3	88.3	9	1330	1810	344067
10	1	53.7	9	-	1597	609331
11	3	91.3	9	1106	1961	871542
12						
13						
14						
15						
16						
17						
18						
19						
20						

Trial Number:			4			Detection (Yes/No)
Number of Bursts in Trial:			11			
Chirp Center Frequency:			5310			Y
Burst	Number of Pulses	Pulse Width (Microseconds)	Chirp Width (MHz)	Pulse 1-to-2 Spacing (µsec)	Pulse 2-to-3 Spacing (µsec)	Starting Location Within Interval (µsec)
1	2	68.1	19	1355	1339	26541
2	1	58.7	19	-	1251	171821
3	2	75.3	19	1640	1136	316229
4	1	56.4	19	-	1753	461864
5	3	99.7	19	1708	1196	8677
6	1	57.7	19	-	1013	153995
7	1	59.5	19	-	1072	299238
8	2	80	19	1369	1482	443177
9	2	82	19	1197	1993	587671
10	2	82.8	19	1005	1883	135674
11	3	88	19	1928	1061	279928
12	3	93.2	19	1907	1207	424279
13	2	70.4	19	1360	1526	570132
14	3	95.3	19	1955	1171	117439
15	2	81.9	19	1545	1690	262502
16	3	98.5	19	1169	1975	406573
17	1	65	19	-	1767	553328
18	3	85.4	19	1637	1011	99799
19	3	91.6	19	1445	1878	244095
20	2	67.3	19	1218	1091	390012

Report Number : FZ482209

DFS Radar Parameters
FCC Radar Type 5
Channel 114 Bandwidth 160MHz

Trial Number:			5			Detection (Yes/No)
Number of Bursts in Trial:			17			
Chirp Center Frequency:			5310			Y
Burst	Number of Pulses	Pulse Width (Microseconds)	Chirp Width (MHz)	Pulse 1-to-2 Spacing (µsec)	Pulse 2-to-3 Spacing (µsec)	Starting Location Within Interval (µsec)
1	2	67.9	16	1133	1320	629614
2	1	62.3	16	-	1957	96856
3	1	53.3	16	-	1592	267719
4	3	90	16	1153	1900	436784
5	2	77.1	16	1646	1166	608289
6	3	83.9	16	1232	1278	75610
7	3	89.1	16	1384	1240	245638
8	2	81.8	16	1676	1833	416355
9	1	50.3	16	-	1075	588736
10	3	87.1	16	1996	1116	54571
11	2	71.3	16	1815	1225	225175
12	3	97.5	16	1465	1884	394825
13	3	90.6	16	1040	1561	565361
14	3	86.3	16	1183	1596	33643
15	3	97.6	16	1073	1365	203957
16	3	84.7	16	1718	1021	373812
17	3	99.7	16	1244	1150	544060
18						
19						
20						

Trial Number:			6			Detection (Yes/No)
Number of Bursts in Trial:			14			
Chirp Center Frequency:			5310			Y
Burst	Number of Pulses	Pulse Width (Microseconds)	Chirp Width (MHz)	Pulse 1-to-2 Spacing (µsec)	Pulse 2-to-3 Spacing (µsec)	Starting Location Within Interval (µsec)
1	3	92.9	12	1564	1085	15438
2	2	67.7	12	1747	1744	222486
3	1	65.8	12	-	1092	430731
4	1	56.3	12	-	1851	637784
5	1	53.7	12	-	1727	845342
6	3	83.5	12	1930	1679	196720
7	1	65.8	12	-	1519	404955
8	3	85.9	12	1034	1134	610711
9	2	76.3	12	1926	1606	818057
10	2	81.5	12	1714	1891	171459
11	3	89.4	12	1594	1310	377969
12	1	63.4	12	-	1568	586875
13	2	69.6	12	1925	1307	792834
14	2	74.5	12	1846	1264	146044
15						
16						
17						
18						
19						
20						

Report Number : FZ482209

DFS Radar Parameters
FCC Radar Type 5
Channel 114 Bandwidth 160MHz

Trial Number:			7			Detection (Yes/No)
Number of Bursts in Trial:			15			
Chirp Center Frequency:			5310			Y
Burst	Number of Pulses	Pulse Width (Microseconds)	Chirp Width (MHz)	Pulse 1-to-2 Spacing (µsec)	Pulse 2-to-3 Spacing (µsec)	Starting Location Within Interval (µsec)
1	1	52.6	10	-	1210	51446
2	3	84.1	10	1725	1314	292696
3	3	97.7	10	1868	1139	533989
4	3	97.3	10	1446	1341	775564
5	3	98.8	10	1386	1544	21542
6	2	72.2	10	1184	1771	263385
7	2	67.6	10	1027	1175	505581
8	2	75.7	10	1871	1026	747058
9	1	60.9	10	-	1798	989976
10	1	64.2	10	-	1138	234024
11	2	78.8	10	1604	1784	475207
12	3	87.5	10	1712	1511	715825
13						
14						
15						
16						
17						
18						
19						
20						

Trial Number:			8			Detection (Yes/No)
Number of Bursts in Trial:			12			
Chirp Center Frequency:			5310			Y
Burst	Number of Pulses	Pulse Width (Microseconds)	Chirp Width (MHz)	Pulse 1-to-2 Spacing (µsec)	Pulse 2-to-3 Spacing (µsec)	Starting Location Within Interval (µsec)
1	1	52.6	10	-	1210	51446
2	3	84.1	10	1725	1314	292696
3	3	97.7	10	1868	1139	533989
4	3	97.3	10	1446	1341	775564
5	3	98.8	10	1386	1544	21542
6	2	72.2	10	1184	1771	263385
7	2	67.6	10	1027	1175	505581
8	2	75.7	10	1871	1026	747058
9	1	60.9	10	-	1798	989976
10	1	64.2	10	-	1138	234024
11	2	78.8	10	1604	1784	475207
12	3	87.5	10	1712	1511	715825
13						
14						
15						
16						
17						
18						
19						
20						

Report Number : FZ482209

DFS Radar Parameters
FCC Radar Type 5
Channel 114 Bandwidth 160MHz

Trial Number:			9			Detection (Yes/No)
Number of Bursts in Trial:			14			
Chirp Center Frequency:			5310			Y
Burst	Number of Pulses	Pulse Width (Microseconds)	Chirp Width (MHz)	Pulse 1-to-2 Spacing (µsec)	Pulse 2-to-3 Spacing (µsec)	Starting Location Within Interval (µsec)
1	1	54.1	13	-	1415	823112
2	1	50.7	13	-	1221	174965
3	1	52.3	13	-	1974	382216
4	3	99.8	13	1696	1558	587395
5	2	68.4	13	1099	1014	796897
6	2	80.8	13	1505	1736	149042
7	1	62.5	13	-	1778	356750
8	2	74.8	13	1204	1149	563824
9	1	50.8	13	-	1049	772314
10	1	54	13	-	1417	123796
11	1	63	13	-	1730	331215
12	3	91.8	13	1270	1143	537402
13	2	79.3	13	1992	1274	744805
14	1	64.3	13	-	1937	98172
15						
16						
17						
18						
19						
20						

Trial Number:			10			Detection (Yes/No)
Number of Bursts in Trial:			8			
Chirp Center Frequency:			5310			Y
Burst	Number of Pulses	Pulse Width (Microseconds)	Chirp Width (MHz)	Pulse 1-to-2 Spacing (µsec)	Pulse 2-to-3 Spacing (µsec)	Starting Location Within Interval (µsec)
1	1	63.4	6	-	1043	535615
2	1	52	6	-	1863	898668
3	3	97.2	6	1605	1973	1259235
4	2	78.7	6	1743	1466	127106
5	2	74.2	6	1219	1280	490358
6	3	88.7	6	1934	1293	852409
7	1	54.3	6	-	1991	1217152
8	3	95.4	6	1555	1580	82296
9						
10						
11						
12						
13						
14						
15						
16						
17						
18						
19						
20						

Report Number : FZ482209

DFS Radar Parameters
FCC Radar Type 5
Channel 114 Bandwidth 160MHz

Trial Number:			11			Detection (Yes/No)
Number of Bursts in Trial:			17			
Chirp Center Frequency:			5296			Y
Burst	Number of Pulses	Pulse Width (Microseconds)	Chirp Width (MHz)	Pulse 1-to-2 Spacing (µsec)	Pulse 2-to-3 Spacing (µsec)	Starting Location Within Interval (µsec)
1	2	73.7	16	1497	1208	209249
2	3	97.4	16	1754	1942	378386
3	3	91.7	16	1702	1999	548411
4	1	66.2	16	-	1393	17733
5	2	70.8	16	1821	1968	187952
6	1	52.3	16	-	1740	359277
7	2	78.9	16	1984	1308	528886
8	2	70.9	16	1358	1050	700166
9	2	75.6	16	1430	1437	167197
10	1	59.1	16	-	1697	338262
11	2	77	16	1304	1397	508324
12	2	67.9	16	1083	1803	678689
13	2	81.2	16	1932	1720	146031
14	2	78.7	16	1121	1247	316923
15	1	63.3	16	-	1634	488056
16	2	68.9	16	1423	1849	657326
17	1	59.3	16	-	1093	125509
18						
19						
20						

Trial Number:			12			Detection (Yes/No)
Number of Bursts in Trial:			19			
Chirp Center Frequency:			5298			Y
Burst	Number of Pulses	Pulse Width (Microseconds)	Chirp Width (MHz)	Pulse 1-to-2 Spacing (µsec)	Pulse 2-to-3 Spacing (µsec)	Starting Location Within Interval (µsec)
1	3	98.9	19	1680	1381	263736
2	2	82.3	19	1855	1716	416459
3	3	86.7	19	1400	1211	567902
4	3	89.7	19	1068	1861	92979
5	3	98.6	19	1194	1507	245155
6	2	71.1	19	1789	1921	397609
7	1	55.9	19	-	1947	551431
8	2	67.9	19	1372	1350	74413
9	3	84.4	19	1107	1203	226559
10	1	58.8	19	-	1715	380056
11	1	65.6	19	-	1017	533408
12	2	78.5	19	1704	1911	55547
13	2	82.3	19	1686	1845	207876
14	3	90.1	19	1071	1938	359771
15	3	90.2	19	1089	1989	511297
16	2	83.1	19	1406	1943	36803
17	1	58.8	19	-	1742	189652
18	2	77	19	1657	1187	341809
19	1	55	19	-	1012	495737
20						

Report Number : FZ482209

DFS Radar Parameters
FCC Radar Type 5
Channel 114 Bandwidth 160MHz

Trial Number:			13			Detection (Yes/No)
Number of Bursts in Trial:			15			
Chirp Center Frequency:			5295			Y
Burst	Number of Pulses	Pulse Width (Microseconds)	Chirp Width (MHz)	Pulse 1-to-2 Spacing (µsec)	Pulse 2-to-3 Spacing (µsec)	Starting Location Within Interval (µsec)
1	1	58.1	13	-	1929	22911
2	1	52.1	13	-	1910	216473
3	1	59.9	13	-	1971	410004
4	1	60.2	13	-	1812	603671
5	3	95.9	13	1906	1399	794160
6	2	79.9	13	1859	1626	192251
7	2	78.5	13	1917	1238	385590
8	1	53.8	13	-	1763	579862
9	1	64.7	13	-	1800	773423
10	1	61.4	13	-	1390	168898
11	2	83.2	13	1858	1692	361606
12	3	84.7	13	1677	1533	553866
13	3	88.7	13	1528	1703	747241
14	2	78.3	13	1951	1258	144710
15	2	69.3	13	1717	1731	337856
16						
17						
18						
19						
20						

Trial Number:			14			Detection (Yes/No)
Number of Bursts in Trial:			12			
Chirp Center Frequency:			5294			Y
Burst	Number of Pulses	Pulse Width (Microseconds)	Chirp Width (MHz)	Pulse 1-to-2 Spacing (µsec)	Pulse 2-to-3 Spacing (µsec)	Starting Location Within Interval (µsec)
1	2	75.3	10	1612	1994	664275
2	1	56.3	10	-	1456	907886
3	2	67.7	10	1185	1617	151316
4	1	55.6	10	-	1337	393746
5	2	75.2	10	1267	1421	635093
6	2	76.3	10	1305	1359	876993
7	3	85.7	10	1362	1547	121278
8	3	98.4	10	1550	1873	362696
9	3	86.4	10	1439	1779	604342
10	3	93.6	10	1031	1059	846453
11	1	63.3	10	-	1328	91871
12	3	92.4	10	1673	1412	333050
13						
14						
15						
16						
17						
18						
19						
20						

Report Number : FZ482209

DFS Radar Parameters
FCC Radar Type 5
Channel 114 Bandwidth 160MHz

Trial Number:			15			Detection (Yes/No)
Number of Bursts in Trial:			19			
Chirp Center Frequency:			5297			Y
Burst	Number of Pulses	Pulse Width (Microseconds)	Chirp Width (MHz)	Pulse 1-to-2 Spacing (µsec)	Pulse 2-to-3 Spacing (µsec)	Starting Location Within Interval (µsec)
1	3	93.3	18	1912	1983	361323
2	2	69.1	18	1794	1102	515261
3	3	86.9	18	1152	1044	39025
4	3	84.9	18	1948	1894	190900
5	2	72.3	18	1916	1094	343941
6	1	51.7	18	-	1447	497624
7	1	58.3	18	-	1429	20319
8	1	60.8	18	-	1979	172999
9	1	57.1	18	-	1641	325872
10	3	88.9	18	1964	1886	475841
11	2	72	18	1297	1909	1489
12	3	90.9	18	1566	1261	153647
13	1	59.8	18	-	1552	307096
14	2	70	18	1291	1759	458804
15	2	67.2	18	1881	1625	610798
16	3	91.2	18	1832	1382	134759
17	1	56.5	18	-	1483	288306
18	1	51.2	18	-	1237	441296
19	2	74.1	18	1245	1471	592780
20						

Trial Number:			16			Detection (Yes/No)
Number of Bursts in Trial:			14			
Chirp Center Frequency:			5295			Y
Burst	Number of Pulses	Pulse Width (Microseconds)	Chirp Width (MHz)	Pulse 1-to-2 Spacing (µsec)	Pulse 2-to-3 Spacing (µsec)	Starting Location Within Interval (µsec)
1	2	76.9	12	1140	1110	158286
2	1	50.2	12	-	1316	366024
3	1	62.9	12	-	1520	573452
4	1	64.7	12	-	1902	780619
5	3	83.8	12	1097	1410	132455
6	1	65.4	12	-	1944	340207
7	1	53.2	12	-	1024	548208
8	1	51.7	12	-	1603	755333
9	2	78.7	12	1168	1804	107117
10	2	72.4	12	1343	1030	314500
11	1	53.8	12	-	1327	522447
12	2	73.6	12	1553	1524	728517
13	2	66.7	12	1122	1722	81611
14	2	82.5	12	1019	1404	288948
15						
16						
17						
18						
19						
20						

Report Number : FZ482209

DFS Radar Parameters
FCC Radar Type 5
Channel 114 Bandwidth 160MHz

Trial Number:			17			Detection (Yes/No)
Number of Bursts in Trial:			20			
Chirp Center Frequency:			5298			Y
Burst	Number of Pulses	Pulse Width (Microseconds)	Chirp Width (MHz)	Pulse 1-to-2 Spacing (µsec)	Pulse 2-to-3 Spacing (µsec)	Starting Location Within Interval (µsec)
1	3	87.6	20	1055	1565	345766
2	3	85.2	20	1541	1735	490019
3	3	84.8	20	1889	1534	39073
4	2	77.9	20	1460	1749	183923
5	2	76.5	20	1485	1518	328777
6	1	60.9	20	-	1540	474728
7	2	83	20	1010	1080	21394
8	2	80.4	20	1752	1824	165992
9	2	67.5	20	1181	1764	310973
10	1	62.1	20	-	1495	456884
11	3	86.4	20	1966	1773	3515
12	3	84.3	20	1188	1593	147928
13	2	76.9	20	1537	1226	293225
14	3	95.8	20	1298	1192	436922
15	1	55.2	20	-	1644	584015
16	1	59	20	-	1402	130832
17	3	94.5	20	1700	1296	274684
18	3	91.9	20	1978	1970	418579
19	3	85.2	20	1551	1732	563464
20	2	69.5	20	1224	1038	112787

Trial Number:			18			Detection (Yes/No)
Number of Bursts in Trial:			12			
Chirp Center Frequency:			5294			Y
Burst	Number of Pulses	Pulse Width (Microseconds)	Chirp Width (MHz)	Pulse 1-to-2 Spacing (µsec)	Pulse 2-to-3 Spacing (µsec)	Starting Location Within Interval (µsec)
1	3	86.4	10	1918	1259	429224
2	3	92.2	10	1719	1598	670241
3	2	80.4	10	1899	1816	912880
4	1	54.3	10	-	1335	158603
5	1	53.1	10	-	1303	400824
6	2	69.4	10	1546	1503	641915
7	2	69.1	10	1639	1279	883823
8	3	100	10	1438	1375	128373
9	2	79.6	10	1705	1239	370379
10	3	88.4	10	1579	1374	611194
11	1	53.3	10	-	1016	855665
12	1	65.3	10	-	1709	98897
13						
14						
15						
16						
17						
18						
19						
20						

Report Number : FZ482209

DFS Radar Parameters
FCC Radar Type 5
Channel 114 Bandwidth 160MHz

Trial Number:			19			Detection (Yes/No)
Number of Bursts in Trial:			14			
Chirp Center Frequency:			5295			Y
Burst	Number of Pulses	Pulse Width (Microseconds)	Chirp Width (MHz)	Pulse 1-to-2 Spacing (µsec)	Pulse 2-to-3 Spacing (µsec)	Starting Location Within Interval (µsec)
1	1	55.3	12	-	1920.000	292143
2	1	58.3	12	-	1797.000	499633
3	2	72.3	12	1039.000	1610.000	706377
4	3	84.8	12	1761.000	1131.000	58989
5	2	82.5	12	1431.000	1875.000	266161
6	1	63.3	12	-	1095.000	474469
7	2	80	12	1913.000	1119.000	680544
8	3	90.3	12	1853.000	1660.000	33519
9	3	91.1	12	1783.000	1539.000	240319
10	3	96.6	12	1036.000	1525.000	447400
11	2	82.7	12	1990.000	1710.000	654516
12	1	50.7	12	-	1234.000	8083
13	2	78.4	12	1109.000	1047.000	215435
14	3	99.5	12	1965.000	1299.000	421325
15						
16						
17						
18						
19						
20						

Trial Number:			20			Detection (Yes/No)
Number of Bursts in Trial:			12			
Chirp Center Frequency:			5294			Y
Burst	Number of Pulses	Pulse Width (Microseconds)	Chirp Width (MHz)	Pulse 1-to-2 Spacing (µsec)	Pulse 2-to-3 Spacing (µsec)	Starting Location Within Interval (µsec)
1	3	88.6	10	1067	1501	733725
2	1	57.4	10	-	1723	977882
3	3	96.6	10	1658	1086	221197
4	2	69.7	10	1945	1751	462915
5	2	77.9	10	1317	1642	705071
6	1	62	10	-	1866	947923
7	3	88.4	10	1077	1997	191373
8	3	97.3	10	1896	1790	432561
9	3	96.2	10	1787	1391	674004
10	3	95.4	10	1892	1020	915842
11	1	54.8	10	-	1084	162176
12	2	80.4	10	1436	1850	403553
13						
14						
15						
16						
17						
18						
19						
20						

Report Number : FZ482209

DFS Radar Parameters
FCC Radar Type 5
Channel 114 Bandwidth 160MHz

Trial Number:			21			Detection (Yes/No)
Number of Bursts in Trial:			16			
Chirp Center Frequency:			5324			Y
Burst	Number of Pulses	Pulse Width (Microseconds)	Chirp Width (MHz)	Pulse 1-to-2 Spacing (µsec)	Pulse 2-to-3 Spacing (µsec)	Starting Location Within Interval (µsec)
1	2	74.7	15	1611	1619	483470
2	1	57.1	15	-	1560	666072
3	3	91.9	15	1475	1392	98810
4	2	83.1	15	1772	1809	279914
5	1	50.7	15	-	1003	462536
6	2	79.2	15	1600	1574	642324
7	1	58.7	15	-	1186	76831
8	2	71	15	1567	1521	257785
9	2	79	15	1960	1777	438554
10	2	68.5	15	1428	1284	620397
11	2	73.5	15	1352	1904	54310
12	2	70.5	15	1115	1864	235506
13	2	76.6	15	1300	1045	417036
14	2	81.2	15	1675	1160	597974
15	1	61.8	15	-	1277	32086
16	3	94.9	15	1206	1450	212751
17						
18						
19						
20						

Trial Number:			22			Detection (Yes/No)
Number of Bursts in Trial:			12			
Chirp Center Frequency:			5326			Y
Burst	Number of Pulses	Pulse Width (Microseconds)	Chirp Width (MHz)	Pulse 1-to-2 Spacing (µsec)	Pulse 2-to-3 Spacing (µsec)	Starting Location Within Interval (µsec)
1	2	78.5	9	1698	1653	526149
2	3	89.8	9	1962	1174	767135
3	1	59.4	9	-	1982	12955
4	2	79.6	9	1890	1633	254612
5	2	76	9	1811	1112	496588
6	1	53.6	9	-	1144	739728
7	2	80.9	9	1053	1220	980872
8	1	61.6	9	-	1724	225249
9	1	53.4	9	-	1901	467279
10	1	59.9	9	-	1379	709720
11	1	60.4	9	-	1453	951847
12	3	91.4	9	1726	1768	194839
13						
14						
15						
16						
17						
18						
19						
20						

Report Number : FZ482209

DFS Radar Parameters
FCC Radar Type 5
Channel 114 Bandwidth 160MHz

Trial Number:			23			Detection (Yes/No)
Number of Bursts in Trial:			20			
Chirp Center Frequency:			5322			Y
Burst	Number of Pulses	Pulse Width (Microseconds)	Chirp Width (MHz)	Pulse 1-to-2 Spacing (µsec)	Pulse 2-to-3 Spacing (µsec)	Starting Location Within Interval (µsec)
1	2	77	20	1363	1191	261858
2	1	58.1	20	-	1248	407646
3	1	62.1	20	-	1836	552319
4	2	76.9	20	1236	1334	99107
5	2	80	20	1852	1914	243514
6	1	52	20	-	1701	389464
7	3	88.6	20	1995	1693	531093
8	2	72.9	20	1387	1922	81159
9	3	98.5	20	1746	1839	225245
10	1	57.9	20	-	1193	371906
11	3	95.9	20	1870	1659	514197
12	1	53.5	20	-	1162	63561
13	3	92	20	1654	1745	207510
14	1	57.3	20	-	1834	353638
15	2	70.5	20	1586	1684	497515
16	2	70	20	1664	1042	45553
17	3	84	20	1630	1765	189821
18	2	76.1	20	1057	1557	335330
19	3	93.2	20	1018	1985	478825
20	3	96.8	20	1614	1760	27594

Trial Number:			24			Detection (Yes/No)
Number of Bursts in Trial:			14			
Chirp Center Frequency:			5325			Y
Burst	Number of Pulses	Pulse Width (Microseconds)	Chirp Width (MHz)	Pulse 1-to-2 Spacing (µsec)	Pulse 2-to-3 Spacing (µsec)	Starting Location Within Interval (µsec)
1	1	50.1	12	-	1841	247117
2	3	93.5	12	1081	1590	453362
3	2	68.8	12	1577	1707	660875
4	1	56.3	12	-	1056	14140
5	3	86	12	1108	1953	220734
6	2	75.2	12	1536	1572	428367
7	1	54.4	12	-	1517	636681
8	2	71.1	12	1243	1329	843157
9	2	76.2	12	1770	1940	195585
10	2	80.2	12	1209	1098	403231
11	2	79.7	12	1214	1588	610202
12	3	90.9	12	1862	1615	815229
13	2	68.7	12	1441	1377	170267
14	2	67.4	12	1313	1872	377306
15						
16						
17						
18						
19						
20						

Report Number : FZ482209

DFS Radar Parameters
FCC Radar Type 5
Channel 114 Bandwidth 160MHz

Trial Number:			25			Detection (Yes/No)
Number of Bursts in Trial:			13			
Chirp Center Frequency:			5326			Y
Burst	Number of Pulses	Pulse Width (Microseconds)	Chirp Width (MHz)	Pulse 1-to-2 Spacing (µsec)	Pulse 2-to-3 Spacing (µsec)	Starting Location Within Interval (µsec)
1	3	94	11	1748	1643	628071
2	2	70.8	11	1201	1177	853391
3	1	56.3	11	-	1006	156223
4	3	96.7	11	1163	1230	378734
5	3	90.6	11	1582	1217	601331
6	2	74.5	11	1281	1569	825462
7	3	92.6	11	1669	1065	128265
8	3	89	11	1135	1493	351161
9	3	96.5	11	1822	1607	573425
10	2	70.5	11	1178	1141	798431
11	3	94	11	1629	1009	100737
12	1	55.8	11	-	1290	324661
13	3	87.7	11	1963	1435	546278
14						
15						
16						
17						
18						
19						
20						

Trial Number:			26			Detection (Yes/No)
Number of Bursts in Trial:			8			
Chirp Center Frequency:			5328			Y
Burst	Number of Pulses	Pulse Width (Microseconds)	Chirp Width (MHz)	Pulse 1-to-2 Spacing (µsec)	Pulse 2-to-3 Spacing (µsec)	Starting Location Within Interval (µsec)
1	2	68.6	5	1161	1306	1253842
2	2	83.1	5	1315	1420	119486
3	1	60.9	5	-	1687	482958
4	2	77.7	5	1158	1776	845641
5	2	77.4	5	1510	1793	1208428
6	2	66.8	5	1323	1576	74748
7	1	63.7	5	-	1333	438300
8	3	91.2	5	1681	1409	800152
9						
10						
11						
12						
13						
14						
15						
16						
17						
18						
19						
20						

Report Number : FZ482209

DFS Radar Parameters
FCC Radar Type 5
Channel 114 Bandwidth 160MHz

Trial Number:			27			Detection (Yes/No)
Number of Bursts in Trial:			17			
Chirp Center Frequency:			5324			Y
Burst	Number of Pulses	Pulse Width (Microseconds)	Chirp Width (MHz)	Pulse 1-to-2 Spacing (µsec)	Pulse 2-to-3 Spacing (µsec)	Starting Location Within Interval (µsec)
1	3	83.6	16	1195	1632	545865
2	3	89.4	16	1627	1173	14067
3	1	55.8	16	-	1532	184953
4	3	90.9	16	1554	1981	353759
5	1	54.7	16	-	1825	526388
6	3	97.7	16	1202	1734	694806
7	2	67.5	16	1434	1571	163568
8	3	96.7	16	1469	1589	333410
9	2	68.3	16	1954	1750	504006
10	2	78.3	16	1082	1591	675297
11	1	55	16	-	1427	142890
12	3	84.9	16	1936	1129	312479
13	2	74.6	16	1856	1959	482953
14	1	63.3	16	-	1885	655022
15	3	99.8	16	1515	1035	121457
16	1	63.6	16	-	1647	292606
17	3	87.3	16	1051	1931	461322
18						
19						
20						

Trial Number:			28			Detection (Yes/No)
Number of Bursts in Trial:			19			
Chirp Center Frequency:			5322			Y
Burst	Number of Pulses	Pulse Width (Microseconds)	Chirp Width (MHz)	Pulse 1-to-2 Spacing (µsec)	Pulse 2-to-3 Spacing (µsec)	Starting Location Within Interval (µsec)
1	3	85.6	19	1078	1946	565136
2	2	68.6	19	1780	1029	89970
3	1	54.2	19	-	1111	243121
4	1	61.2	19	-	1104	396034
5	3	97.1	19	1969	1157	546225
6	3	98.3	19	1699	1142	70998
7	1	62.4	19	-	1655	224093
8	2	80.2	19	1769	1126	376127
9	3	87.5	19	1448	1216	527806
10	3	85.8	19	1348	1847	52247
11	3	88.1	19	1124	1023	204582
12	1	65.3	19	-	1848	357941
13	1	52.5	19	-	1470	510977
14	1	52.3	19	-	1312	33698
15	2	74.1	19	1200	1915	186023
16	1	54.9	19	-	1479	339327
17	2	76.2	19	1502	1376	491053
18	1	60.4	19	-	1758	14858
19	2	81.5	19	1103	1491	167387
20						

Report Number : FZ482209

DFS Radar Parameters
FCC Radar Type 5
Channel 114 Bandwidth 160MHz

Trial Number:			29			Detection (Yes/No)
Number of Bursts in Trial:			12			
Chirp Center Frequency:			5326			Y
Burst	Number of Pulses	Pulse Width (Microseconds)	Chirp Width (MHz)	Pulse 1-to-2 Spacing (µsec)	Pulse 2-to-3 Spacing (µsec)	Starting Location Within Interval (µsec)
1	1	50.5	10	-	1857	507709
2	1	55.7	10	-	1246	750249
3	3	85.8	10	1002	1774	989003
4	2	76.9	10	1474	1125	235634
5	2	75.1	10	1052	1254	477675
6	3	92.3	10	1486	1180	718312
7	2	78.1	10	1757	1301	960895
8	3	92.2	10	1252	1898	205370
9	3	89	10	1706	1260	446940
10	2	70.9	10	1620	1578	689225
11	1	63.1	10	-	1782	932305
12	1	55.3	10	-	1522	176231
13						
14						
15						
16						
17						
18						
19						
20						

Trial Number:			30			Detection (Yes/No)
Number of Bursts in Trial:			18			
Chirp Center Frequency:			5323			Y
Burst	Number of Pulses	Pulse Width (Microseconds)	Chirp Width (MHz)	Pulse 1-to-2 Spacing (µsec)	Pulse 2-to-3 Spacing (µsec)	Starting Location Within Interval (µsec)
1	3	83.4	17	1205	1454	277485
2	3	97.3	17	1826	1319	437880
3	3	90.4	17	1986	1079	598445
4	3	91.8	17	1151	1563	97088
5	3	98.2	17	1977	1876	257251
6	1	59.5	17	-	1952	419893
7	2	80	17	1137	1253	580724
8	3	86.5	17	1128	1054	77366
9	3	91.1	17	1599	1105	238032
10	3	93.5	17	1373	1867	398605
11	1	60.7	17	-	1033	562025
12	2	67.2	17	1405	1288	57684
13	1	61.8	17	-	1585	219083
14	2	79.4	17	1667	1933	379234
15	2	81.4	17	1464	1096	540896
16	1	65.7	17	-	1496	37916
17	2	76	17	1255	1733	198794
18	2	81	17	1668	1326	359754
19						
20						

Trial Id	Radar Type	Pulse Witdh(us)	PRI(us)	Pulses per Hop	Hopping Rate(Khz)	Hopping Sequence Length(ms)	Visible Frequency Number
0	Type 6	1	333.3	9	0.3333	300	17
	Frequency List (MHz)	0	1	2	3	4	
	0	5364	5717	5334	5705	5549	
	5	5312	5260	5635	5503	5570	
	10	5347	5508	5292	5447	5588	
	15	5621	5638	5296	5482	5455	
	20	5636	5593	5434	5306	5411	
	25	5556	5378	5478	5432	5341	
	30	5438	5294	5496	5285	5327	
	35	5293	5502	5277	5403	5330	
	40	5612	5720	5544	5615	5561	
	45	5676	5704	5366	5290	5387	
	50	5278	5723	5383	5368	5263	
	55	5630	5375	5718	5281	5604	
	60	5453	5509	5479	5400	5262	
	65	5354	5467	5545	5466	5611	
	70	5715	5402	5568	5641	5396	
	75	5567	5557	5674	5359	5392	
	80	5313	5537	5258	5475	5272	
	85	5388	5474	5555	5410	5355	
	90	5517	5382	5386	5664	5697	
	95	5721	5268	5489	5706	5525	
1	Type 6	1	333.3	9	0.3333	300	14
	Frequency List (MHz)	0	1	2	3	4	
	0	5619	5578	5270	5294	5354	
	5	5660	5710	5666	5399	5656	
	10	5297	5333	5642	5609	5709	
	15	5668	5527	5647	5547	5284	
	20	5375	5395	5384	5444	5705	
	25	5584	5536	5480	5658	5453	
	30	5403	5576	5588	5641	5465	
	35	5674	5580	5623	5559	5627	
	40	5553	5704	5673	5633	5724	
	45	5373	5348	5331	5513	5637	
	50	5544	5314	5585	5697	5257	
	55	5672	5471	5423	5424	5638	
	60	5644	5345	5569	5655	5413	
	65	5271	5415	5550	5371	5335	
	70	5382	5416	5533	5706	5558	
	75	5535	5692	5256	5436	5716	
	80	5385	5669	5458	5349	5456	
	85	5336	5634	5703	5352	5280	
	90	5506	5313	5690	5326	5631	
	95	5628	5546	5289	5490	5590	

2	Type 6	1	333.3	9	0.3333	300	16
	Frequency List (MHz)	0	1	2	3	4	
	0	5302	5342	5681	5455	5611	
	5	5493	5682	5310	5257	5606	
	10	5587	5561	5374	5362	5630	
	15	5322	5320	5502	5475	5364	
	20	5555	5353	5316	5387	5357	
	25	5332	5654	5312	5262	5409	
	30	5522	5547	5410	5618	5253	
	35	5311	5683	5556	5470	5258	
	40	5537	5398	5710	5491	5469	
	45	5670	5465	5704	5456	5406	
	50	5384	5400	5513	5720	5365	
	55	5296	5276	5641	5445	5626	
	60	5564	5620	5395	5334	5290	
	65	5401	5578	5359	5569	5586	
	70	5282	5649	5407	5368	5647	
	75	5643	5509	5592	5675	5678	
	80	5581	5275	5381	5512	5600	
	85	5304	5382	5389	5458	5666	
	90	5419	5642	5350	5526	5519	
	95	5709	5692	5418	5653	5354	
3	Type 6	1	333.3	9	0.3333	300	19
	Frequency List (MHz)	0	1	2	3	4	
	0	5557	5581	5617	5616	5356	
	5	5535	5704	5385	5420	5338	
	10	5518	5350	5415	5651	5313	
	15	5447	5605	5520	5653	5563	
	20	5519	5257	5476	5330	5598	
	25	5506	5515	5366	5443	5661	
	30	5533	5367	5358	5502	5606	
	35	5347	5647	5266	5411	5451	
	40	5334	5332	5709	5667	5394	
	45	5684	5539	5464	5437	5665	
	50	5389	5421	5416	5574	5488	
	55	5536	5580	5279	5439	5324	
	60	5499	5710	5708	5404	5305	
	65	5295	5525	5589	5359	5452	
	70	5576	5272	5492	5388	5551	
	75	5547	5323	5724	5256	5721	
	80	5293	5379	5584	5361	5508	
	85	5479	5693	5341	5655	5715	
	90	5629	5494	5401	5637	5423	
	95	5280	5316	5662	5281	5649	

4	Type 6	1	333.3	9	0.3333	300	11
	Frequency List (MHz)	0	1	2	3	4	
	0	5337	5345	5553	5302	5673	
	5	5577	5629	5460	5583	5642	
	10	5352	5614	5456	5655	5672	
	15	5401	5574	5611	5565	5370	
	20	5571	5588	5295	5468	5303	
	25	5486	5358	5718	5470	5380	
	30	5703	5422	5324	5573	5654	
	35	5426	5263	5634	5661	5462	
	40	5648	5498	5270	5474	5664	
	45	5701	5622	5425	5490	5552	
	50	5265	5597	5467	5300	5432	
	55	5724	5437	5469	5258	5715	
	60	5453	5277	5637	5705	5348	
	65	5593	5262	5561	5251	5255	
	70	5275	5341	5364	5510	5516	
	75	5346	5712	5504	5549	5356	
	80	5527	5376	5264	5447	5442	
	85	5454	5658	5428	5544	5374	
	90	5343	5663	5478	5689	5384	
	95	5372	5707	5274	5292	5466	
5	Type 6	1	333.3	9	0.3333	300	13
	Frequency List (MHz)	0	1	2	3	4	
	0	5592	5584	5489	5463	5418	
	5	5619	5651	5535	5271	5374	
	10	5283	5500	5594	5375	5693	
	15	5604	5714	5610	5562	5482	
	20	5279	5711	5557	5276	5277	
	25	5307	5446	5574	5414	5270	
	30	5408	5281	5691	5428	5624	
	35	5625	5354	5430	5339	5376	
	40	5487	5581	5683	5617	5630	
	45	5644	5705	5483	5342	5519	
	50	5298	5518	5563	5598	5437	
	55	5391	5659	5455	5686	5582	
	60	5697	5469	5628	5294	5319	
	65	5597	5631	5521	5436	5423	
	70	5278	5665	5340	5485	5466	
	75	5438	5315	5275	5614	5330	
	80	5520	5590	5596	5264	5289	
	85	5405	5646	5526	5346	5676	
	90	5267	5539	5349	5600	5258	
	95	5671	5533	5345	5587	5523	

6	Type 6	1	333.3	9	0.3333	300	15
	Frequency List (MHz)	0	1	2	3	4	
	0	5372	5348	5425	5624	5260	
	5	5283	5576	5610	5434	5581	
	10	5689	5289	5635	5570	5714	
	15	5577	5256	5342	5558	5279	
	20	5490	5652	5549	5724	5640	
	25	5634	5552	5300	5448	5409	
	30	5297	5713	5431	5580	5444	
	35	5667	5445	5701	5492	5290	
	40	5326	5286	5621	5382	5280	
	45	5559	5313	5541	5499	5704	
	50	5395	5474	5569	5274	5421	
	55	5698	5625	5345	5374	5657	
	60	5711	5519	5642	5301	5454	
	65	5715	5520	5536	5366	5413	
	70	5414	5378	5417	5316	5428	
	75	5357	5586	5484	5296	5430	
	80	5627	5684	5653	5273	5606	
	85	5465	5363	5491	5352	5355	
	90	5518	5631	5688	5588	5329	
	95	5485	5502	5590	5390	5531	
7	Type 6	1	333.3	9	0.3333	300	17
	Frequency List (MHz)	0	1	2	3	4	
	0	5530	5587	5361	5310	5480	
	5	5325	5598	5685	5500	5410	
	10	5523	5553	5676	5290	5260	
	15	5568	5383	5445	5603	5471	
	20	5498	5514	5690	5638	5697	
	25	5431	5583	5280	5404	5482	
	30	5451	5661	5670	5646	5354	
	35	5642	5331	5633	5594	5267	
	40	5301	5640	5369	5559	5622	
	45	5277	5391	5507	5396	5502	
	50	5552	5494	5271	5650	5620	
	55	5363	5719	5545	5338	5299	
	60	5564	5628	5268	5684	5608	
	65	5283	5343	5584	5572	5673	
	70	5683	5517	5492	5381	5266	
	75	5292	5387	5326	5706	5627	
	80	5682	5262	5367	5276	5716	
	85	5270	5511	5428	5458	5359	
	90	5351	5600	5285	5394	5571	
	95	5400	5265	5327	5643	5313	

8	Type 6	1	333.3	9	0.3333	300	15
	Frequency List (MHz)	0	1	2	3	4	
	0	5310	5351	5297	5374	5322	
	5	5367	5523	5285	5663	5617	
	10	5454	5342	5717	5485	5281	
	15	5656	5510	5548	5648	5409	
	20	5680	5631	5630	5670	5319	
	25	5435	5483	5508	5516	5493	
	30	5647	5627	5386	5506	5462	
	35	5470	5724	5390	5420	5690	
	40	5576	5452	5497	5387	5274	
	45	5320	5487	5479	5560	5605	
	50	5381	5622	5671	5445	5489	
	55	5526	5253	5279	5502	5397	
	60	5629	5440	5678	5704	5544	
	65	5533	5608	5408	5478	5655	
	70	5481	5590	5268	5346	5673	
	75	5254	5295	5258	5459	5372	
	80	5623	5401	5267	5706	5545	
	85	5488	5650	5324	5305	5373	
	90	5559	5464	5660	5344	5698	
	95	5394	5378	5363	5321	5311	
9	Type 6	1	333.3	9	0.3333	300	17
	Frequency List (MHz)	0	1	2	3	4	
	0	5565	5590	5708	5535	5542	
	5	5409	5545	5360	5351	5349	
	10	5288	5606	5283	5583	5302	
	15	5269	5637	5554	5693	5380	
	20	5417	5274	5572	5719	5643	
	25	5682	5287	5686	5612	5550	
	30	5632	5536	5584	5504	5280	
	35	5660	5512	5340	5661	5573	
	40	5604	5415	5435	5530	5271	
	45	5627	5467	5562	5618	5658	
	50	5646	5401	5527	5722	5541	
	55	5268	5336	5714	5372	5473	
	60	5526	5539	5574	5369	5650	
	65	5367	5482	5547	5715	5370	
	70	5598	5252	5464	5484	5439	
	75	5622	5305	5642	5374	5341	
	80	5711	5385	5404	5264	5523	
	85	5448	5326	5451	5270	5667	
	90	5356	5621	5303	5724	5470	
	95	5639	5386	5361	5278	5378	

10	Type 6	1	333.3	9	0.3333	300	16
	Frequency List (MHz)	0	1	2	3	4	
	0	5345	5354	5644	5696	5384	
	5	5548	5470	5435	5514	5653	
	10	5694	5492	5324	5303	5323	
	15	5357	5667	5657	5641	5572	
	20	5425	5440	5610	5711	5616	
	25	5473	5414	5338	5584	5674	
	30	5541	5719	5432	5480	5651	
	35	5431	5457	5348	5615	5254	
	40	5715	5373	5295	5365	5556	
	45	5447	5645	5579	5533	5277	
	50	5703	5298	5252	5566	5280	
	55	5330	5636	5562	5403	5444	
	60	5655	5704	5519	5676	5427	
	65	5596	5568	5583	5450	5640	
	70	5304	5421	5547	5288	5598	
	75	5264	5494	5484	5695	5488	
	80	5495	5660	5293	5527	5639	
	85	5718	5351	5643	5511	5462	
	90	5632	5310	5394	5501	5476	
	95	5576	5327	5378	5333	5362	
11	Type 6	1	333.3	9	0.3333	300	23
	Frequency List (MHz)	0	1	2	3	4	
	0	5503	5593	5580	5382	5604	
	5	5590	5492	5510	5385	5625	
	10	5281	5365	5498	5344	5348	
	15	5319	5285	5686	5386	5336	
	20	5509	5551	5325	5589	5361	
	25	5563	5520	5442	5618	5716	
	30	5411	5459	5681	5300	5315	
	35	5522	5350	5501	5529	5568	
	40	5323	5689	5535	5362	5485	
	45	5427	5253	5637	5667	5628	
	50	5404	5349	5341	5389	5602	
	55	5518	5277	5697	5415	5309	
	60	5394	5464	5508	5639	5391	
	65	5380	5282	5532	5582	5493	
	70	5533	5587	5515	5574	5698	
	75	5483	5614	5530	5676	5265	
	80	5605	5441	5360	5636	5438	
	85	5351	5474	5654	5500	5642	
	90	5321	5579	5482	5610	5684	
	95	5388	5443	5547	5581	5527	

12	Type 6	1	333.3	9	0.3333	300	22
	Frequency List (MHz)	0	1	2	3	4	
	0	5283	5357	5516	5543	5446	
	5	5632	5417	5585	5268	5592	
	10	5459	5545	5406	5693	5365	
	15	5436	5388	5256	5578	5344	
	20	5675	5492	5317	5562	5627	
	25	5512	5723	5546	5652	5380	
	30	5300	5455	5674	5358	5498	
	35	5454	5710	5621	5654	5443	
	40	5504	5678	5359	5407	5336	
	45	5695	5720	5685	5580	5400	
	50	5430	5687	5706	5544	5467	
	55	5419	5289	5438	5559	5506	
	60	5340	5554	5329	5558	5327	
	65	5385	5662	5519	5590	5364	
	70	5550	5657	5355	5259	5673	
	75	5420	5618	5697	5524	5275	
	80	5633	5254	5424	5534	5274	
	85	5465	5315	5415	5269	5488	
	90	5547	5566	5616	5509	5427	
	95	5445	5560	5636	5347	5432	
13	Type 6	1	333.3	9	0.3333	300	17
	Frequency List (MHz)	0	1	2	3	4	
	0	5538	5596	5452	5704	5666	
	5	5674	5439	5660	5431	5324	
	10	5390	5334	5544	5413	5386	
	15	5524	5573	5491	5301	5295	
	20	5352	5269	5530	5406	5535	
	25	5515	5364	5451	5650	5686	
	30	5422	5664	5412	5317	5607	
	35	5318	5496	5326	5417	5429	
	40	5454	5343	5489	5565	5443	
	45	5356	5721	5387	5419	5656	
	50	5298	5475	5283	5281	5519	
	55	5393	5498	5657	5713	5260	
	60	5470	5724	5647	5477	5531	
	65	5278	5594	5597	5663	5259	
	70	5505	5690	5688	5526	5282	
	75	5719	5638	5672	5253	5478	
	80	5338	5630	5450	5632	5266	
	85	5497	5466	5333	5366	5339	
	90	5434	5591	5581	5351	5250	
	95	5411	5442	5264	5545	5527	

14	Type 6	1	333.3	9	0.3333	300	15
	Frequency List (MHz)	0	1	2	3	4	
	0	5318	5360	5388	5390	5508	
	5	5338	5364	5260	5594	5628	
	10	5321	5598	5585	5511	5407	
	15	5612	5700	5497	5724	5487	
	20	5263	5435	5471	5398	5306	
	25	5691	5654	5279	5720	5464	
	30	5650	5369	5532	5284	5516	
	35	5635	5417	5310	5582	5368	
	40	5657	5669	5503	5683	5353	
	45	5553	5270	5502	5714	5351	
	50	5362	5634	5457	5608	5711	
	55	5337	5607	5452	5372	5706	
	60	5599	5414	5396	5576	5303	
	65	5574	5616	5702	5533	5534	
	70	5489	5466	5428	5588	5693	
	75	5537	5478	5293	5402	5387	
	80	5716	5449	5266	5259	5377	
	85	5401	5627	5645	5632	5583	
	90	5557	5561	5298	5320	5339	
	95	5597	5518	5708	5262	5543	
15	Type 6	1	333.3	9	0.3333	300	22
	Frequency List (MHz)	0	1	2	3	4	
	0	5573	5599	5324	5551	5253	
	5	5380	5386	5335	5660	5360	
	10	5630	5484	5626	5706	5428	
	15	5603	5255	5600	5294	5679	
	20	5271	5504	5412	5487	5481	
	25	5669	5640	5382	5480	5279	
	30	5506	5539	5326	5272	5533	
	35	5336	5299	5508	5581	5260	
	40	5282	5496	5277	5441	5448	
	45	5447	5482	5250	5585	5297	
	50	5404	5627	5510	5633	5553	
	55	5319	5534	5659	5320	5406	
	60	5562	5351	5677	5579	5438	
	65	5408	5604	5520	5342	5651	
	70	5569	5366	5284	5647	5500	
	75	5574	5318	5289	5381	5437	
	80	5522	5530	5697	5701	5376	
	85	5515	5444	5561	5624	5365	
	90	5535	5278	5641	5371	5587	
	95	5357	5552	5493	5560	5608	

16	Type 6	1	333.3	9	0.3333	300	14
	Frequency List (MHz)	0	1	2	3	4	
	0	5256	5460	5260	5615	5570	
	5	5422	5311	5410	5348	5567	
	10	5561	5273	5667	5426	5449	
	15	5691	5382	5703	5339	5396	
	20	5279	5670	5353	5479	5454	
	25	5557	5492	5488	5584	5313	
	30	5645	5525	5283	5487	5685	
	35	5534	5341	5599	5377	5413	
	40	5671	5335	5360	5379	5591	
	45	5444	5411	5705	5668	5258	
	50	5457	5514	5289	5334	5604	
	55	5408	5357	5603	5263	5655	
	60	5548	5551	5269	5383	5715	
	65	5527	5466	5640	5600	5508	
	70	5576	5651	5450	5669	5560	
	75	5321	5613	5609	5642	5678	
	80	5478	5486	5296	5608	5624	
	85	5524	5438	5364	5580	5470	
	90	5606	5325	5555	5489	5375	
	95	5480	5674	5663	5282	5573	
17	Type 6	1	333.3	9	0.3333	300	22
	Frequency List (MHz)	0	1	2	3	4	
	0	5511	5699	5671	5301	5315	
	5	5464	5333	5485	5396	5492	
	10	5537	5708	5621	5470	5304	
	15	5509	5331	5287	5588	5665	
	20	5264	5391	5568	5427	5348	
	25	5441	5691	5688	5347	5687	
	30	5414	5715	5605	5459	5354	
	35	5480	5312	5648	5663	5682	
	40	5271	5540	5317	5356	5718	
	45	5685	5276	5316	5413	5640	
	50	5510	5655	5497	5558	5450	
	55	5599	5692	5370	5367	5522	
	60	5434	5328	5547	5353	5412	
	65	5366	5549	5544	5408	5446	
	70	5253	5266	5546	5421	5462	
	75	5355	5481	5719	5659	5633	
	80	5499	5552	5297	5521	5280	
	85	5438	5681	5543	5565	5474	
	90	5279	5608	5375	5619	5712	
	95	5523	5257	5541	5507	5261	

18	Type 6	1	333.3	9	0.3333	300	13
	Frequency List (MHz)	0	1	2	3	4	
	0	5291	5463	5607	5462	5632	
	5	5603	5258	5560	5674	5326	
	10	5274	5341	5491	5392	5636	
	15	5434	5332	5305	5673	5430	
	20	5400	5711	5293	5419	5317	
	25	5381	5254	5303	5672	5345	
	30	5611	5649	5619	5403	5541	
	35	5596	5585	5623	5633	5438	
	40	5647	5665	5359	5374	5466	
	45	5666	5516	5589	5706	5586	
	50	5394	5312	5646	5661	5493	
	55	5543	5599	5273	5476	5276	
	60	5455	5664	5498	5580	5618	
	65	5338	5531	5435	5629	5424	
	70	5311	5309	5314	5450	5310	
	75	5290	5640	5410	5609	5333	
	80	5461	5275	5518	5572	5620	
	85	5506	5282	5342	5330	5573	
	90	5718	5557	5517	5601	5708	
	95	5298	5525	5405	5304	5682	
19	Type 6	1	333.3	9	0.3333	300	17
	Frequency List (MHz)	0	1	2	3	4	
	0	5546	5702	5543	5623	5377	
	5	5645	5280	5635	5265	5335	
	10	5257	5590	5315	5439	5512	
	15	5383	5288	5440	5594	5681	
	20	5596	5273	5649	5373	5502	
	25	5620	5622	5518	5415	5393	
	30	5289	5629	5560	5385	5372	
	35	5283	5494	5337	5510	5424	
	40	5706	5571	5361	5435	5479	
	45	5442	5519	5456	5392	5290	
	50	5282	5297	5679	5716	5500	
	55	5600	5275	5464	5672	5308	
	60	5577	5401	5390	5447	5450	
	65	5608	5334	5507	5615	5524	
	70	5285	5322	5430	5433	5621	
	75	5662	5719	5589	5528	5515	
	80	5292	5462	5566	5307	5284	
	85	5296	5474	5724	5399	5710	
	90	5250	5353	5509	5303	5597	
	95	5407	5428	5562	5678	5300	

20	Type 6	1	333.3	9	0.3333	300	21
	Frequency List (MHz)	0	1	2	3	4	
	0	5704	5466	5479	5309	5597	
	5	5687	5680	5710	5428	5639	
	10	5566	5379	5356	5634	5533	
	15	5471	5318	5543	5422	5311	
	20	5592	5665	5641	5443	5390	
	25	5569	5350	5622	5449	5435	
	30	5653	5586	5300	5537	5667	
	35	5325	5585	5608	5269	5521	
	40	5263	5314	5509	5504	5529	
	45	5408	5528	5525	5393	5572	
	50	5343	5646	5333	5386	5502	
	55	5660	5688	5554	5465	5677	
	60	5338	5326	5454	5260	5615	
	65	5403	5347	5591	5396	5555	
	70	5515	5579	5601	5527	5387	
	75	5261	5707	5291	5550	5602	
	80	5439	5257	5370	5692	5498	
	85	5512	5487	5719	5401	5650	
	90	5335	5402	5255	5659	5722	
	95	5364	5493	5676	5510	5700	
21	Type 6	1	333.3	9	0.3333	300	18
	Frequency List (MHz)	0	1	2	3	4	
	0	5484	5705	5415	5470	5439	
	5	5351	5702	5310	5591	5371	
	10	5497	5265	5494	5354	5554	
	15	5559	5445	5646	5370	5503	
	20	5600	5356	5252	5255	5416	
	25	5656	5421	5456	5251	5483	
	30	5477	5542	5543	5418	5311	
	35	5390	5464	5676	5501	5422	
	40	5435	5674	5447	5269	5526	
	45	5337	5508	5608	5451	5625	
	50	5522	5642	5384	5475	5703	
	55	5507	5401	5655	5496	5309	
	60	5455	5619	5680	5326	5414	
	65	5345	5492	5295	5318	5273	
	70	5587	5530	5711	5615	5666	
	75	5638	5670	5622	5583	5691	
	80	5367	5626	5381	5561	5412	
	85	5682	5718	5589	5286	5289	
	90	5553	5314	5329	5261	5465	
	95	5541	5463	5574	5671	5458	

22	Type 6	1	333.3	9	0.3333	300	24
	Frequency List (MHz)	0	1	2	3	4	
	0	5264	5469	5351	5631	5659	
	5	5393	5627	5385	5279	5578	
	10	5428	5529	5535	5549	5575	
	15	5647	5572	5274	5415	5695	
	20	5608	5425	5668	5722	5389	
	25	5544	5370	5355	5517	5616	
	30	5528	5500	5633	5463	5685	
	35	5603	5292	5297	5349	5513	
	40	5577	5509	5523	5644	5488	
	45	5691	5412	5678	5495	5398	
	50	5343	5435	5564	5526	5451	
	55	5589	5462	5315	5280	5584	
	60	5309	5625	5336	5615	5294	
	65	5530	5702	5565	5596	5345	
	70	5670	5630	5560	5591	5607	
	75	5693	5468	5477	5407	5545	
	80	5721	5409	5402	5525	5552	
	85	5381	5483	5340	5326	5609	
	90	5494	5364	5499	5423	5465	
	95	5518	5558	5569	5716	5718	
23	Type 6	1	333.3	9	0.3333	300	14
	Frequency List (MHz)	0	1	2	3	4	
	0	5519	5708	5287	5695	5501	
	5	5435	5649	5460	5442	5407	
	10	5262	5318	5576	5269	5596	
	15	5638	5699	5377	5412	5591	
	20	5706	5336	5362	5432	5697	
	25	5387	5556	5454	5658	5417	
	30	5457	5373	5712	5408	5645	
	35	5480	5568	5350	5360	5352	
	40	5660	5323	5652	5520	5573	
	45	5468	5299	5470	5634	5285	
	50	5274	5486	5275	5349	5298	
	55	5680	5416	5463	5512	5251	
	60	5713	5474	5667	5683	5453	
	65	5282	5438	5718	5566	5534	
	70	5399	5514	5656	5633	5409	
	75	5567	5584	5338	5545	5623	
	80	5490	5663	5612	5309	5406	
	85	5694	5525	5499	5448	5294	
	90	5574	5332	5659	5370	5436	
	95	5477	5415	5542	5467	5319	

24	Type 6	1	333.3	9	0.3333	300	13
	Frequency List (MHz)	0	1	2	3	4	
	0	5299	5472	5698	5381	5721	
	5	5477	5574	5535	5508	5614	
	10	5668	5582	5617	5367	5251	
	15	5351	5383	5505	5604	5527	
	20	5660	5647	5328	5335	5549	
	25	5590	5488	5700	5403	5414	
	30	5588	5389	5703	5309	5571	
	35	5364	5503	5274	5666	5365	
	40	5261	5417	5517	5405	5448	
	45	5382	5528	5687	5695	5537	
	50	5717	5393	5370	5653	5331	
	55	5600	5270	5639	5612	5515	
	60	5376	5667	5269	5252	5677	
	65	5586	5642	5258	5636	5543	
	70	5458	5479	5623	5400	5444	
	75	5301	5372	5428	5341	5575	
	80	5290	5316	5345	5347	5627	
	85	5349	5470	5565	5432	5628	
	90	5676	5447	5672	5552	5468	
	95	5469	5359	5321	5325	5678	
25	Type 6	1	333.3	9	0.3333	300	16
	Frequency List (MHz)	0	1	2	3	4	
	0	5457	5711	5634	5542	5563	
	5	5616	5596	5610	5671	5346	
	10	5599	5371	5658	5562	5638	
	15	5339	5381	5486	5453	5321	
	20	5535	5351	5588	5417	5308	
	25	5586	5498	5318	5289	5522	
	30	5364	5292	5706	5426	5448	
	35	5662	5257	5656	5663	5505	
	40	5674	5657	5514	5334	5428	
	45	5465	5489	5265	5437	5404	
	50	5396	5373	5564	5581	5324	
	55	5368	5625	5571	5399	5329	
	60	5557	5347	5677	5271	5462	
	65	5541	5576	5383	5280	5250	
	70	5261	5485	5519	5502	5578	
	75	5525	5604	5652	5613	5700	
	80	5435	5400	5609	5331	5635	
	85	5385	5281	5299	5595	5350	
	90	5382	5407	5695	5546	5683	
	95	5607	5263	5655	5550	5459	

26	Type 6	1	333.3	9	0.3333	300	15
	Frequency List (MHz)	0	1	2	3	4	
	0	5712	5475	5570	5703	5308	
	5	5658	5521	5685	5359	5650	
	10	5433	5257	5699	5282	5659	
	15	5427	5508	5589	5498	5610	
	20	5446	5420	5626	5409	5281	
	25	5377	5350	5424	5393	5556	
	30	5406	5656	5328	5315	5721	
	35	5587	5278	5528	5431	5674	
	40	5441	5531	5515	5422	5608	
	45	5263	5408	5548	5547	5318	
	50	5324	5280	5572	5639	5542	
	55	5671	5294	5558	5347	5494	
	60	5502	5654	5600	5692	5663	
	65	5662	5577	5311	5414	5661	
	70	5352	5711	5361	5334	5398	
	75	5461	5289	5698	5668	5585	
	80	5429	5723	5481	5629	5595	
	85	5300	5329	5331	5597	5598	
	90	5624	5368	5645	5679	5485	
	95	5707	5563	5591	5636	5537	
27	Type 6	1	333.3	9	0.3333	300	20
	Frequency List (MHz)	0	1	2	3	4	
	0	5492	5714	5506	5389	5625	
	5	5700	5543	5285	5522	5382	
	10	5364	5521	5265	5477	5680	
	15	5418	5635	5692	5327	5454	
	20	5586	5567	5498	5254	5299	
	25	5627	5594	5590	5448	5642	
	30	5661	5564	5541	5629	5369	
	35	5324	5584	5588	5280	5614	
	40	5453	5565	5605	5570	5291	
	45	5631	5371	5589	5534	5273	
	50	5690	5494	5355	5482	5707	
	55	5641	5513	5657	5659	5544	
	60	5486	5426	5638	5611	5516	
	65	5618	5684	5464	5697	5658	
	70	5374	5420	5258	5721	5566	
	75	5681	5358	5262	5696	5297	
	80	5621	5709	5439	5672	5304	
	85	5616	5368	5491	5475	5341	
	90	5580	5318	5281	5380	5519	
	95	5537	5362	5645	5524	5325	

28	Type 6	1	333.3	9	0.3333	300	19
	Frequency List (MHz)	0	1	2	3	4	
	0	5272	5478	5539	5550	5370	
	5	5267	5565	5360	5588	5589	
	10	5295	5310	5306	5672	5701	
	15	5506	5287	5320	5491	5519	
	20	5462	5655	5508	5490	5702	
	25	5531	5626	5355	5698	5624	
	30	5717	5401	5716	5264	5293	
	35	5557	5692	5262	5502	5594	
	40	5319	5391	5330	5602	5499	
	45	5271	5336	5663	5424	5476	
	50	5410	5449	5266	5342	5317	
	55	5299	5670	5564	5463	5460	
	60	5387	5311	5349	5489	5415	
	65	5252	5681	5687	5560	5552	
	70	5353	5576	5593	5683	5464	
	75	5507	5350	5379	5605	5366	
	80	5382	5547	5361	5371	5518	
	85	5385	5721	5294	5341	5612	
	90	5378	5621	5389	5457	5292	
	95	5534	5497	5412	5374	5597	
29	Type 6	1	333.3	9	0.3333	300	16
	Frequency List (MHz)	0	1	2	3	4	
	0	5430	5717	5475	5711	5687	
	5	5406	5490	5435	5276	5321	
	10	5604	5574	5444	5295	5722	
	15	5594	5414	5326	5536	5373	
	20	5346	5546	5579	5675	5419	
	25	5478	5558	5327	5658	5629	
	30	5420	5674	5519	5559	5432	
	35	5648	5488	5512	5513	5433	
	40	5402	5329	5570	5599	5331	
	45	5251	5624	5477	5266	5286	
	50	5625	5317	5431	5518	5621	
	55	5653	5279	5358	5343	5514	
	60	5434	5650	5627	5413	5509	
	65	5491	5660	5371	5545	5665	
	70	5291	5467	5259	5338	5486	
	75	5428	5528	5613	5481	5299	
	80	5549	5309	5612	5695	5681	
	85	5581	5422	5540	5386	5699	
	90	5503	5446	5256	5462	5640	
	95	5427	5377	5487	5398	5307	