FCC Part 96.47 Test Report

Applicant	:	**Quectel Wireless Solutions Co., Ltd.**
Equipment	:	**5G NR Module**
Brand Name	:	**QUECTEL**
Model Name	:	**AG555Q-GL**
FCC ID	:	**XMR2024AG555QGL**
Standard	:	**FCC Part 96.47**
Test Date(s)	:	**Jan. 14, 2024**

We, Sporton International Inc. (Kunshan), would like to declare that the tested sample has been evaluated in accordance with the test procedures and has been in compliance with the applicable technical standards.

The test results in this report apply exclusively to the tested model / sample. Without written approval of Sporton International Inc. (Kunshan), the test report shall not be reproduced except in full.

Jason Jia

Approved by: Jason Jia

ACCREDITED
Cert #5145.02

Sporton International Inc. (Kunshan)
No. 1098, Pengxi North Road, Kunshan Economic Development Zone Jiangsu Province 215300 People's Republic of China

Table of Contents

1 GENERAL DESCRIPTION 5

1.1 APPLICANT 5

1.2 MANUFACTURER 5

1.3 PRODUCT FEATURE OF EQUIPMENT UNDER TEST 5

1.4 PRODUCT SPECIFICATION OF EQUIPMENT UNDER TEST 5

1.5 TESTING LOCATION 6

1.6 TEST SOFTWARE 6

1.7 APPLICABLE STANDARDS 6

2 TEST CONFIGURATION OF EQUIPMENT UNDER TEST 7

2.1 CONNECTION DIAGRAM OF TEST SYSTEM 7

3 END USER DEVICE ADDITIONAL REQUIREMENT 8

3.1 TEST REQUIREMENT 8

3.2 TEST PROCEDURE 8

3.3 TEST RESULT 9

4 LIST OF MEASURING EQUIPMENT 11

5 MEASUREMENT UNCERTAINTY 12

APPENDIX A. TEST SETUP PHOTO

History of this test report

Report No.	Version	Description	Issued Date
FG3D1801I	01	Initial issue of report	Jun. 06, 2024

Summary of Test Result

Report Clause	Ref Std. Clause	Test Items	Result (PASS/FAIL)	Remark
3	96.47	End User Device additional requirement	Pass	-

Conformity Assessment Condition:
1. The test results (PASS/FAIL) with all measurement uncertainty excluded are presented against the regulation limits or in accordance with the requirements stipulated by the applicant/manufacturer who shall bear all the risks of non-compliance that may potentially occur if measurement uncertainty is taken into account. 2. The measurement uncertainty please refer to each test result in the section “Measurement Uncertainty”
Disclaimer:
The product specifications of the EUT presented in the test report that may affect the test assessments are declared by the manufacturer who shall take full responsibility for the authenticity.

1 General Description

1.1 Applicant

Quectel Wireless Solutions Co., Ltd.
Building 5, Shanghai Business Park Phase III (Area B), No.1016 Tianlin Road, Minhang District, Shanghai, 200233, China

1.2 Manufacturer

Quectel Wireless Solutions Co., Ltd.
Building 5, Shanghai Business Park Phase III (Area B), No.1016 Tianlin Road, Minhang District, Shanghai, 200233, China

1.3 Product Feature of Equipment Under Test

Product Feature	
Equipment	5G NR Module
Brand Name	QUECTEL
Model Name	AG555Q-GL
FCC ID	XMR2024AG555QGL
IMEI Code	868637060023777
HW Version	R1.0
SW Version	BYA555QGLABR01A01M8G_OCPU
EUT Stage	Identical Prototype

Remark: The above EUT's information was declared by manufacturer. Please refer to the specifications or user's manual for more detailed description.

1.4 Product Specification of Equipment Under Test

Standards-related Product Specification	
Tx Frequency	LTE Band 48: 3550 MHz ~ 3700 MHz
Rx Frequency	LTE Band 48: 3550 MHz ~ 3700 MHz
Antenna Gain	-3.65 dBi
Type of Modulation	QPSK / 16QAM / 64QAM / 256QAM

1.5 Testing Location

Sporton International Inc. (Kunshan) is accredited to ISO/IEC 17025:2017 by American Association for Laboratory Accreditation with Certificate Number 5145.02.

Test Firm	Sporton International Inc. (Kunshan)		
Test Site Location	No. 1098, Pengxi North Road, Kunshan Economic Development Zone Jiangsu Province 215300 People's Republic of China TEL : +86-512-57900158		
Test Site No.	**Sporton Site No.**	**FCC Designation No.**	**FCC Test Firm Registration No.**
	DFS01-KS	CN1257	314309
Test Engineer	Chad Wang		
Temperature	20~24.5℃		
Relative Humidity	40~60%		

1.6 Test Software

Item	Site	Manufactor	Name	Version
1.	DFS01-KS	Sporton	DFS & Adaptivity Test Tools	1.0

1.7 Applicable Standards

- FCC Part 96.47
- FCC KDB 940660 D01 Part 96 CBRS Eqpt v03
- WINNF-TS-0122-V1.0.2 CBRS CBSD Test Specification

Remark: All test items were verified and recorded according to the standards and without any deviation during the test.

2 Test Configuration of Equipment Under Test

2.1 Connection Diagram of Test System

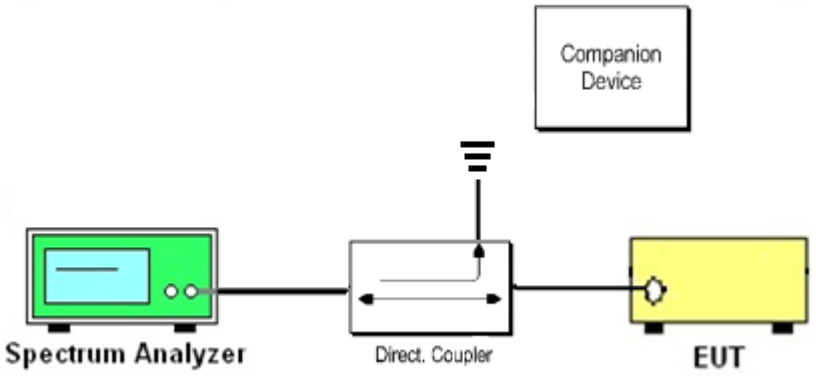

The companion device is certified CBRS (FCC ID: S9GQ910US02)

3 End User Device additional requirement

3.1 Test Requirement

FCC Part 96.47

(a) End User Devices may operate only if they can positively receive and decode an authorization signal transmitted by a CBSD, including the frequencies and power limits for their operation.

(1) An End User Device must discontinue operations, change frequencies, or change its operational power level within 10 seconds of receiving instructions from its associated CBSD.

3.2 Test Procedure

Following procedure can be done by applying WINNF-TS-0122-V1.0.2 CBRS CBSD Test Specification, use the certified Ruckus CBSD (FCC ID: S9GQ910US02) as companion device to show compliance with Part 96.47 requirement for End User Device (EUD):

1. Configure SAS granted CBSD to operate at frequency 3600-3620MHz & power level 17dBm/MHz
2. Enable AP service from Ruckus Cloud management
3. Check EUD Tx Frequency and power
4. Disable AP service from Ruckus Cloud management

a. Check EUD stops transmission within 10seconds.

5. Configure SAS granted CBSD to operate at frequency 3670-3690MHz & power level 7dBm/MHz
6. Enable AP service from Ruckus Cloud management
7. Check EUD Tx Frequency and power
8. Disable AP service from Ruckus Cloud management

a. Check EUD stops transmission within 10seconds.

3.3 Test Result

[Step 1] Setup with frequency 3600-3620MHz and power level 17dBm/MHz

[Step 3] Check EUD Tx Frequency and power

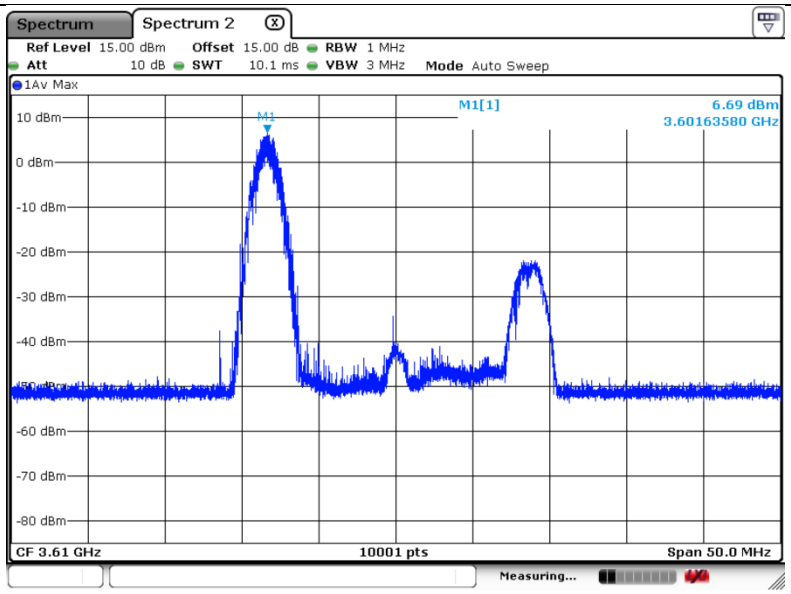

[Step 4.a.] EUD stops transmission within 10 seconds of receiving instructions from its associated CBSD.

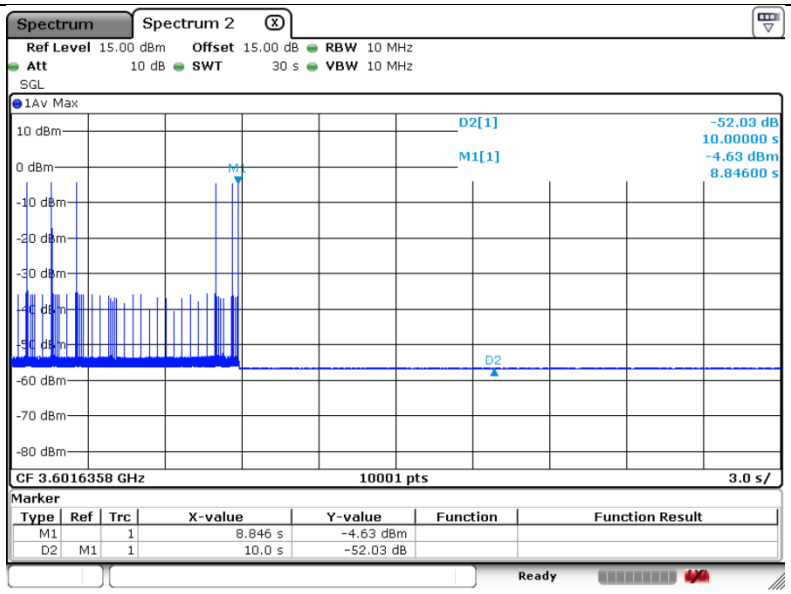

[Step 5] Setup with 3670-3690MHz & power level 7dBm/MHz

[Step 7] Check EUD Tx Frequency and power

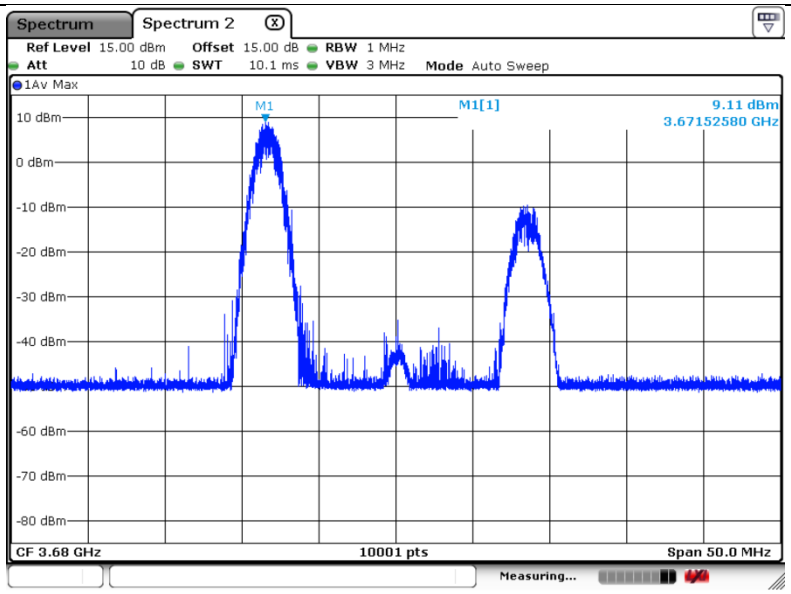

[Step 8.a.] After changing the frequency and power level,

The module (EUT) discontinues operations, change frequencies, or change its operational power level within 10 seconds of receiving instructions from its associated CBSD. Test result is PASS.

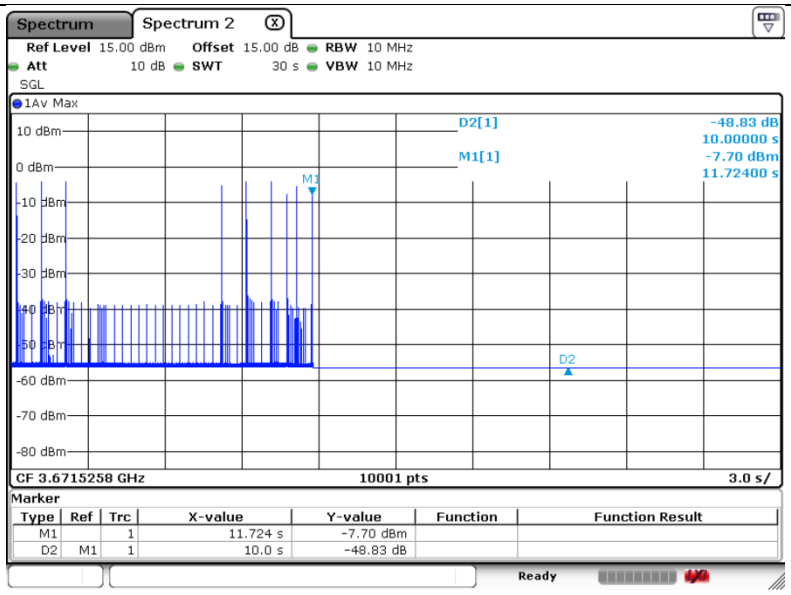

4 List of Measuring Equipment

Instrument	Manufacturer	Model No.	Serial No.	Characteristics	Calibration Date	Test Date	Due Date	Remark
Signal Analyzer	R&S	FSV7	101472	10Hz~7GHz	Jan. 05, 2024	Jan. 14, 2024	Jan. 04, 2025	Conducted (DFS01-KS)
Combiner	MTJ Cooperation	MTJ7112	N/A	0.4-6GHz	NCR	Jan. 14, 2024	NCR	Conducted (DFS01-KS)

5 Measurement Uncertainty

The measurement uncertainties shown below were calculated in accordance with the requirements of ANSI 63.10-2013. All the measurement uncertainty value were shown with a coverage K=2 to indicate 95% level of confidence. The measurement data show herein meets or exceeds the CISPR measurement uncertainty values specified in CISPR 16-4-2 and can be compared directly to specified limit to determine compliance.

Uncertainty of Conducted Measurement

Conducted Generated signal Levels	**±0.56 dB**
Conducted Time	**0.38%**

---------- THE END ----------