SC200E&SC206E Series

Hardware Design

Smart Module Series

Version: 1.1

Date: 2022-09-23

Status: Released

At Quectel, our aim is to provide timely and comprehensive services to our customers. If you require any assistance, please contact our headquarters:

Quectel Wireless Solutions Co., Ltd.
Building 5, Shanghai Business Park Phase III (Area B), No.1016 Tianlin Road, Minhang District, Shanghai 200233, China
Tel: +86 21 5108 6236
Email: info@quectel.com

Or our local offices. For more information, please visit:
http://www.quectel.com/support/sales.htm.

For technical support, or to report documentation errors, please visit:
http://www.quectel.com/support/technical.htm.
Or email us at: support@quectel.com.

Legal Notices

We offer information as a service to you. The provided information is based on your requirements and we make every effort to ensure its quality. You agree that you are responsible for using independent analysis and evaluation in designing intended products, and we provide reference designs for illustrative purposes only. Before using any hardware, software or service guided by this document, please read this notice carefully. Even though we employ commercially reasonable efforts to provide the best possible experience, you hereby acknowledge and agree that this document and related services hereunder are provided to you on an “as available” basis. We may revise or restate this document from time to time at our sole discretion without any prior notice to you.

Use and Disclosure Restrictions

License Agreements

Documents and information provided by us shall be kept confidential, unless specific permission is granted. They shall not be accessed or used for any purpose except as expressly provided herein.

Copyright

Our and third-party products hereunder may contain copyrighted material. Such copyrighted material shall not be copied, reproduced, distributed, merged, published, translated, or modified without prior written consent. We and the third party have exclusive rights over copyrighted material. No license shall be granted or conveyed under any patents, copyrights, trademarks, or service mark rights. To avoid ambiguities, purchasing in any form cannot be deemed as granting a license other than the normal non-exclusive, royalty-free license to use the material. We reserve the right to take legal action for noncompliance with abovementioned requirements, unauthorized use, or other illegal or malicious use of the material.

Trademarks

Except as otherwise set forth herein, nothing in this document shall be construed as conferring any rights to use any trademark, trade name or name, abbreviation, or counterfeit product thereof owned by Quectel or any third party in advertising, publicity, or other aspects.

Third-Party Rights

This document may refer to hardware, software and/or documentation owned by one or more third parties ("third-party materials"). Use of such third-party materials shall be governed by all restrictions and obligations applicable thereto.

We make no warranty or representation, either express or implied, regarding the third-party materials, including but not limited to any implied or statutory, warranties of merchantability or fitness for a particular purpose, quiet enjoyment, system integration, information accuracy, and non-infringement of any third-party intellectual property rights with regard to the licensed technology or use thereof. Nothing herein constitutes a representation or warranty by us to either develop, enhance, modify, distribute, market, sell, offer for sale, or otherwise maintain production of any our products or any other hardware, software, device, tool, information, or product. We moreover disclaim any and all warranties arising from the course of dealing or usage of trade.

Privacy Policy

To implement module functionality, certain device data are uploaded to Quectel's or third-party's servers, including carriers, chipset suppliers or customer-designated servers. Quectel, strictly abiding by the relevant laws and regulations, shall retain, use, disclose or otherwise process relevant data for the purpose of performing the service only or as permitted by applicable laws. Before data interaction with third parties, please be informed of their privacy and data security policy.

Disclaimer

a) We acknowledge no liability for any injury or damage arising from the reliance upon the information.
b) We shall bear no liability resulting from any inaccuracies or omissions, or from the use of the information contained herein.
c) While we have made every effort to ensure that the functions and features under development are free from errors, it is possible that they could contain errors, inaccuracies, and omissions. Unless otherwise provided by valid agreement, we make no warranties of any kind, either implied or express, and exclude all liability for any loss or damage suffered in connection with the use of features and functions under development, to the maximum extent permitted by law, regardless of whether such loss or damage may have been foreseeable.
d) We are not responsible for the accessibility, safety, accuracy, availability, legality, or completeness of information, advertising, commercial offers, products, services, and materials on third-party websites and third-party resources.

Copyright © Quectel Wireless Solutions Co., Ltd. 2022. All rights reserved.

Safety Information

The following safety precautions must be observed during all phases of operation, such as usage, service or repair of any cellular terminal or mobile incorporating the module. Manufacturers of the cellular terminal should notify users and operating personnel of the following safety information by incorporating these guidelines into all manuals of the product. Otherwise, Quectel assumes no liability for customers' failure to comply with these precautions.

	Full attention must be paid to driving at all times in order to reduce the risk of an accident. Using a mobile while driving (even with a handsfree kit) causes distraction and can lead to an accident. Please comply with laws and regulations restricting the use of wireless devices while driving.
	Switch off the cellular terminal or mobile before boarding an aircraft. The operation of wireless appliances in an aircraft is forbidden to prevent interference with communication systems. If there is an Airplane Mode, it should be enabled prior to boarding an aircraft. Please consult the airline staff for more restrictions on the use of wireless devices on an aircraft.
	Wireless devices may cause interference on sensitive medical equipment, so please be aware of the restrictions on the use of wireless devices when in hospitals, clinics or other healthcare facilities.
	Cellular terminals or mobiles operating over radio signal and cellular network cannot be guaranteed to connect in certain conditions, such as when the mobile bill is unpaid or the (U)SIM card is invalid. When emergency help is needed in such conditions, use emergency call if the device supports it. In order to make or receive a call, the cellular terminal or mobile must be switched on in a service area with adequate cellular signal strength. In an emergency, the device with emergency call function cannot be used as the only contact method considering network connection cannot be guaranteed under all circumstances.
	The cellular terminal or mobile contains a transceiver. When it is ON, it receives and transmits radio frequency signals. RF interference can occur if it is used close to TV sets, radios, computers or other electric equipment.
	In locations with explosive or potentially explosive atmospheres, obey all posted signs and turn off wireless devices such as mobile phone or other cellular terminals. Areas with explosive or potentially explosive atmospheres include fueling areas, below decks on boats, fuel or chemical transfer or storage facilities, and areas where the air contains chemicals or particles such as grain, dust or metal powders.

About the Document

Revision History

Version	Date	Author	Description
-	2021-11-25	Dorian MENG/ Waller GUO	Creation of the document
1.0	2022-04-22	Dorian MENG/ Waller GUO	First official release
1.1	2022-09-23	Dorian MENG/ Vasile WANG/ Elliot LI	1. Added SC206E series and SC200E-JP. 2. Updated the minimum supply voltage of SC200E series from 3.5 V to 3.55 V. 3. Updated the lower limit of supply voltage related to voltage drop from 3.4 V to 3.1 V (Chapter 3.4.2). 4. Updated Wi-Fi receiving sensitivity data (Chapter 4.1.1). 5. Updated Bluetooth receiving sensitivity data (Chapter 4.2.1). 6. Updated the accuracy of GNSS under CEP-50 from 1.95 m to 2.5 m (Chapter 5.1). 7. Updated power consumption data (Chapter 7.5). 8. Updated RF receiving sensitivity data (Chapter 7.7). 9. Updated the document name of document [2] (Chapter 10).

Contents

Safety Information **3**

About the Document **4**

Contents **5**

Table Index **8**

Figure Index **10**

1 Introduction **12**

2 Product Overview **13**

2.1. Frequency Bands and Functions 13
2.2. Key Features 16
2.3. EVB Kit 19

3 Application Interfaces **20**

3.1. General Description 20
3.2. Pin Assignment 21
3.3. Pin Description 22
3.4. Power Supply 33
3.4.1. Power Supply Pins 33
3.4.2. Voltage Stability Requirements 33
3.4.3. Reference Design for Power Supply 35
3.5. Turn On/Off 36
3.5.1. Turn On with PWRKEY 36
3.5.2. Turn Off 38
3.6. VRTC 38
3.7. Power Output 39
3.8. Charging Interface 39
3.9. USB Interface (Type-C) 41
3.10. UART Interfaces 43
3.11. (U)SIM Interfaces 45
3.12. SD Card Interface 47
3.13. GPIO Interfaces 49
3.14. I2C Interfaces 50
3.15. ADC Interface 51
3.16. Vibration Motor Drive Interface 52
3.17. LCM Interface 52
3.18. Flash Interface 55
3.19. Touch Panel Interface 55
3.20. Camera Interfaces 56
3.20.1. MIPI Design Considerations 60
3.21. Sensor Interface 62

3.22. Audio Interfaces 62
3.22.1. Reference Circuit Design for Microphone Interfaces 63
3.22.2. Reference Circuit Design for Earpiece Interface 64
3.22.3. Reference Circuit Design for Headset Interface 65
3.22.4. Reference Circuit Design for Lineout Interface 65
3.22.5. Audio Signal Design Considerations 66
3.23. USB_BOOT Control Interface 66

4 Wi-Fi/Bluetooth 68
4.1. Wi-Fi 68
4.1.1. Wi-Fi Performance 68
4.2. Bluetooth 70
4.2.1. Bluetooth Performance 71

5 GNSS 72
5.1. GNSS Performance 72
5.2. Reference Design 73

6 Antenna Interfaces 74
6.1. Main Antenna and Rx-diversity Antenna Interfaces 74
6.1.1. Operating Frequency 74
6.1.2. Reference Design 77
6.2. Wi-Fi/Bluetooth Antenna Interface 78
6.3. GNSS Antenna Interface 79
6.3.1. Reference Circuit Design for Passive GNSS Antenna 80
6.3.2. Reference Circuit Design for Active GNSS Antenna 80
6.4. RF Routing Guidelines 81
6.5. Antenna Installation 83
6.5.1. Antenna Design Requirements 83
6.5.2. RF Connector Recommendation 84

7 Electrical Characteristics and Reliability 86
7.1. Absolute Maximum Ratings 86
7.2. Power Supply Ratings 86
7.3. Digital I/O Characteristics 87
7.4. Operating and Storage Temperatures 88
7.5. Power Consumption 89
7.6. Tx Power 97
7.7. Rx Sensitivity 100
7.8. ESD Protection 103

8 Mechanical Information 104
8.1. Mechanical Dimensions 104
8.2. Recommended Footprint 106
8.3. Top and Bottom Views 107

9 Storage, Manufacturing & Packaging 108

9.1. Storage Conditions 108
9.2. Manufacturing and Soldering 109
9.3. Packaging Specification 111
9.3.1. Carrier Tape 111
9.3.2. Plastic Reel 112
9.3.3. Packaging Process 112

10 Appendix References 114

Table Index

Table 1: Applicable Modules 13
Table 2: SC200E-CE Frequency Bands and GNSS Functions 14
Table 3: SC200E-EM&SC206E-EM Frequency Bands and GNSS Functions 14
Table 4: SC200E-NA&SC206E-NA Frequency Bands and GNSS Functions 15
Table 5: SC200E-WF&SC206E-WF Frequency Bands 15
Table 6: SC200E-JP Frequency Bands and GNSS Functions 15
Table 7: Key Features 16
Table 8: I/O Parameter Definition 22
Table 9: Pin Description 22
Table 10: Power Description 39
Table 11: Pin Definition of Charging Interface 40
Table 12: Pin Definition of USB Interface 41
Table 13: USB Trace Length Inside the Module 43
Table 14: Pin Definition of UART Interfaces 43
Table 15: Pin Definition of (U)SIM Interfaces 45
Table 16: Pin Definition of SD Card Interface 47
Table 17: SD Card Trace Length Inside the Module 48
Table 18: Pin Definition of GPIO Interfaces 49
Table 19: Pin Definition of I2C Interfaces 51
Table 20: Pin Definition of ADC Interface 51
Table 21: Pin Definition of Vibration Motor Drive Interface 52
Table 22: Pin Definition of LCM Interface 52
Table 23: Pin Definition of Flash Interface 55
Table 24: Pin Definition of Touch Panel Interface 56
Table 25: Pin Definition of Camera Interfaces 56
Table 26: MIPI Trace Length Inside the Module 60
Table 27: Pin Definition of Sensor Interface 62
Table 28: Pin Definition of Audio Interfaces 62
Table 29: Pin Definition of USB_BOOT Control Interface 66
Table 30: Wi-Fi Transmitting Performance 68
Table 31: Wi-Fi Receiving Performance 69
Table 32: Bluetooth Data Rate and Version 71
Table 33: Bluetooth Transmitting and Receiving Performance 71
Table 34: GNSS Performance 72
Table 35: Pin Definition of Main/Rx-diversity Antenna Interfaces 74
Table 36: SC200E-CE Operating Frequency 74
Table 37: SC200E-EM&SC206E-EM Operating Frequency 75
Table 38: SC200E-NA&SC206E-NA Operating Frequency 76
Table 39: SC200E-JP Operating Frequency 77
Table 40: Pin Definition of Wi-Fi/Bluetooth Antenna Interface 78
Table 41: Wi-Fi/Bluetooth Frequency 78

Table 42: Pin Definition of GNSS Antenna Interface 79
Table 43: GNSS Frequency 79
Table 44: Antenna Requirements 83
Table 45: Absolute Maximum Ratings 86
Table 46: Power Supply Ratings 86
Table 47: 1.8 V Digital I/O Requirements 87
Table 48: (U)SIM 1.8 V I/O Requirements 87
Table 49: (U)SIM 2.95 V I/O Requirements 87
Table 50: SD Card 1.8 V I/O Requirements 88
Table 51: SD Card 2.95 V I/O Requirements 88
Table 52: Operating and Storage Temperatures 88
Table 53: SC200E-CE Power Consumption 89
Table 54: SC200E-EM&SC206E-EM Power Consumption 91
Table 55: SC200E-NA&SC206E-NA Power Consumption 95
Table 56: SC200E-JP Power Consumption 96
Table 57: SC200E-CE RF Tx Power 97
Table 58: SC200E-EM&SC206E-EM RF Tx Power 98
Table 59: SC200E-NA&SC206E-NA RF Tx Power 99
Table 60: SC200E-JP RF Tx Power 99
Table 61: SC200E-CE RF Rx Sensitivity (Unit: dBm) 100
Table 62: SC200E-EM&SC206E-EM RF Rx Sensitivity (Unit: dBm) 101
Table 63: SC200E-NA&SC206E-NA RF Rx Sensitivity (Unit: dBm) 102
Table 64: SC200E-JP RF Rx Sensitivity (Unit: dBm) 102
Table 65: Electrostatic Discharge Characteristics (Temperature: 25 ºC, Humidity: 45 %) 103
Table 66: Recommended Thermal Profile Parameters 110
Table 67: Carrier Tape Dimension Table (Unit: mm) 111
Table 68: Plastic Reel Dimension Table (Unit: mm) 112
Table 69: Related Documents 114
Table 70: Terms and Abbreviations 114

Figure Index

Figure 1: Functional Diagram ..... 错误！未定义书签。
Figure 2: Pin Assignment (Top View) 21
Figure 3: Power Supply Limits During Burst Transmission 34
Figure 4: Reference Circuit for Power Supply 34
Figure 5: Reference Circuit of Power Supply 35
Figure 6: Turn On Module with Open Collector Driver 36
Figure 7: Turn On Module Using Button 36
Figure 8: Turn-on Timing 37
Figure 9: Forced Turn-off Timing 38
Figure 10: RTC Powered by Coin Cell 38
Figure 11: Reference Design for Battery Charging Circuit 40
Figure 12: USB Interface Reference Design (OTG Supported) 42
Figure 13: Reference Circuit with Voltage-level Translator Chip for UART0 44
Figure 14: RS-232 Level Match Circuit for UART0 44
Figure 15: Reference Circuit for (U)SIM Interface with an 8-pin (U)SIM Card Connector 46
Figure 16: Reference Circuit for (U)SIM Interface with a 6-pin (U)SIM Card Connector 46
Figure 17: Reference Circuit for the SD Card Interface 48
Figure 18: Reference Circuit for Motor Connection 52
Figure 19: Reference Circuit Design for LCM Interface 54
Figure 20: Reference Design for LCM External Backlight Driving Circuit 55
Figure 21: Reference Circuit Design for the Touch Panel Interface 56
Figure 22: Reference Circuit Design for 3-Camera Applications 59
Figure 23: Reference Circuit Design for ECM Microphone Interface 63
Figure 24: Reference Circuit Design for MEMS Microphone Interface 64
Figure 25: Reference Circuit Design for Earpiece Interface 64
Figure 26: Reference Circuit Design for Headset Interface 65
Figure 27: Reference Circuit Design for Lineout Interface 65
Figure 28: Reference Circuit Design for USB_BOOT Control Interface 67
Figure 29: Reference Circuit Design for Main and Rx-diversity Antenna Interfaces 78
Figure 30: Reference Circuit Design for Wi-Fi/Bluetooth Antenna 79
Figure 31: Reference Circuit Design for Passive GNSS Antenna 80
Figure 32: Reference Circuit Design for Active GNSS Antenna 81
Figure 33: Microstrip Design on a 2-layer PCB 81
Figure 34: Coplanar Waveguide Design on a 2-layer PCB 82
Figure 35: Coplanar Waveguide Design on a 4-layer PCB (Layer 3 as Reference Ground) 82
Figure 36: Coplanar Waveguide Design on a 4-layer PCB (Layer 4 as Reference Ground) 82
Figure 37: Dimensions of the Receptacle (Unit: mm) 84
Figure 38: Specifications of Mated Plugs 85
Figure 39: Space Factor of Mated Connectors (Unit: mm) 85
Figure 40: Module Top and Side Dimensions 104
Figure 41: Module Bottom Dimensions (Bottom View) 105

Figure 42: Recommended Footprint (Top View) 106
Figure 43: Top and Bottom Views of SC200E Series 107
Figure 44: Top and Bottom Views of SC206E Series 107
Figure 45: Recommended Reflow Soldering Thermal Profile 109
Figure 46: Carrier Tape Dimension Drawing 111
Figure 47: Plastic Reel Dimension Drawing 112
Figure 48: Packaging Process 113

1 Introduction

This document defines SC200E series and SC206E series modules and describes their air interface and hardware interfaces which are connected to your applications.

With this document, you can quickly understand module interface specifications, electrical and mechanical details, as well as other related information of the module. The document, coupled with application notes and user guides, makes it easy to design and set up mobile applications with the module.

2 Product Overview

2.1. Frequency Bands and Functions

SC200E series and SC206E series are Smart LTE modules based on Android and Linux operating systems, respectively, and provide industrial grade performance. The modules' general features are listed below:

- Supports worldwide LTE-FDD, LTE-TDD, DC-HSDPA, HSPA+, HSDPA, HSUPA, WCDMA, EVDO/CDMA, EDGE, GSM and GPRS coverage.
- Supports short-range wireless communication via Wi-Fi 802.11a/b/g/n/ac and Bluetooth 5.0 [1].
- Integrates GPS/GLONASS/BDS/Galileo/QZSS/SBAS/NavIC satellite positioning systems.
- Supports multiple audio and video codecs.
- Built-in high performance Adreno™ 702 graphics processing unit.
- Provides multiple audio and video input/output interfaces as well as abundant GPIO interfaces.

Table 1: Applicable Modules

Module Series	Models
SC200E	SC200E-CE
	SC200E-EM
	SC200E-NA
	SC200E-WF
	SC200E-JP
SC206E	SC206E-EM
	SC206E-NA

[1] The module is compliant with all mandatory Bluetooth 5.0 features, but does not support Bluetooth 5.0 optional features like 2 Mbps BLE, Advanced Advertising Extension, etc.

	SC206E-WF

Table 2: SC200E-CE Frequency Bands and GNSS Functions

Mode	Frequency Bands
LTE-FDD	B1/B3/B5/B8
LTE-TDD	B34/B38/B39/B40/B41
WCDMA	B1/B8
EVDO/CDMA	BC0
GSM	EGSM900/DCS1800
Wi-Fi 802.11a/b/g/n/ac	2412–2472 MHz 5180–5825 MHz
Bluetooth 5.0	2402–2480 MHz
GNSS	GPS: 1575.42 ±1.023 MHz (L1) GLONASS: 1597.5–1605.8 MHz (L1) BDS: 1561.098 ±2.046 MHz (B1I) Galileo: 1575.42 ±2.046 MHz (E1) QZSS: 1575.42 ±1.023 MHz (L1) SBAS: 1575.42 ±1.023 MHz (L1)

Table 3: SC200E-EM&SC206E-EM Frequency Bands and GNSS Functions

Mode	Frequency Bands
LTE-FDD	B1/B2/B3/B4/B5/B7/B8/B20/B28
LTE-TDD	B38/B40/B41
WCDMA	B1/B2/B4/B5/B8
GSM	GSM850/EGSM900/DCS1800/PCS1900
Wi-Fi 802.11a/b/g/n/ac	2412–2472 MHz 5180–5825 MHz
Bluetooth 5.0	2402–2480 MHz
GNSS	GPS: 1575.42 ±1.023 MHz (L1) GLONASS: 1597.5–1605.8 MHz (L1) BDS: 1561.098 ±2.046 MHz (B1I) Galileo: 1575.42 ±2.046 MHz (E1) QZSS: 1575.42 ±1.023 MHz (L1)

	SBAS: 1575.42 ±1.023 MHz (L1)

Table 4: SC200E-NA&SC206E-NA Frequency Bands and GNSS Functions

Mode	Frequency Bands
LTE-FDD	B2/B4/B5/B7/B12/B13/B14/B17/B25/B26/B66/B71
LTE-TDD	B41
Wi-Fi 802.11a/b/g/n/ac	2412–2472 MHz 5180–5825 MHz
Bluetooth 5.0	2402–2480 MHz
GNSS	GPS: ● 1575.42 ±1.023 MHz (L1) ● 1176.45 ±10.23 MHz (L5) GLONASS: 1597.5–1605.8 MHz (L1) BDS: 1561.098 ±2.046 MHz (B1I) Galileo: ● 1575.42 ±2.046 MHz (E1) ● 1176.45 ±10.23 MHz (E5a) QZSS: ● 1575.42 ±1.023 MHz (L1) ● 1176.45 ±10.23 MHz (L5) SBAS: ● 1575.42 ±1.023 MHz (L1) ● 1176.45 ±10.23 MHz (L5) NavIC: 1176.45 ±10.23 MHz (L5)

Table 5: SC200E-WF&SC206E-WF Frequency Bands

Mode	Frequency Bands
Wi-Fi 802.11a/b/g/n/ac	2412–2472 MHz 5180–5825 MHz
Bluetooth 5.0	2402–2480 MHz

Table 6: SC200E-JP Frequency Bands and GNSS Functions

Mode	Frequency Bands
LTE-FDD	B1/B3/B5/B8/B11/B18/B19/B21/B26/B28

LTE-TDD	B41
WCDMA	B1/B6/B8/B19
Wi-Fi 802.11a/b/g/n/ac	2412–2472 MHz 5180–5825 MHz
Bluetooth 5.0	2402–2480 MHz
GNSS	GPS: 1575.42 ±1.023 MHz (L1) GLONASS: 1597.5–1605.8 MHz (L1) BDS: 1561.098 ±2.046 MHz (B1I) Galileo: 1575.42 ±2.046 MHz (E1) QZSS: 1575.42 ±1.023 MHz (L1) SBAS: 1575.42 ±1.023 MHz (L1)

SC200E series and SC206E series are SMD type modules, which can be embedded into applications through their 274 pins, including 146 LCC pins and 128 LGA pins. With a compact profile of 40.5 mm × 40.5 mm × 2.85 mm, the module can meet most of the requirements for M2M applications such as edge device, edge computing, CPE, wireless POS, smart metering, router, data card, automotive, smart phone, digital signage, alarm panel, security and industry PDA, etc.

2.2. Key Features

The following table describes the detailed features of the module.

Table 7: Key Features

Feature	Details
Application Processor	● 64-bit quad-core ARM Cortex-A53 microprocessor, up to 2.0 GHz ● 512 KB L2 cache
Modem DSP	● Hexagon DSP v66k core ● 512 KB L2 cache
GPU	Adreno™ 702 GPU with 64-bit addressing, up to 845 MHz
Memory (Optional)	SC200E series: ● 32 GB eMMC + 2 GB LPDDR4X ● 32 GB eMMC + 3 GB LPDDR4X SC206E series: ● 32 GB eMMC + 2 GB LPDDR4X
Operating System	SC200E series: Android 12 SC206E series: Linux
Power Supply	● Supply voltage: 3.55–4.4 V

	● Typical supply voltage: 3.8 V
Transmitting Power	● Class 4 (33 dBm ±2 dB) for GSM850 ● Class 4 (33 dBm ±2 dB) for EGSM900 ● Class 1 (30 dBm ±2 dB) for DCS1800 ● Class 1 (30 dBm ±2 dB) for PCS1900 ● Class E2 (27 dBm ±3 dB) for GSM850 8-PSK ● Class E2 (27 dBm ±3 dB) for EGSM900 8-PSK ● Class E2 (26 dBm ±3 dB) for DCS1800 8-PSK ● Class E2 (26 dBm ±3 dB) for PCS1900 8-PSK ● Class 3 (24 dBm +3/-1 dB) for EVDO/CDMA BC0 ● Class 3 (23 dBm ±2 dB) for WCDMA bands ● Class 3 (23 dBm ±2 dB) for LTE-FDD bands ● Class 3 (23 dBm ±2 dB) for LTE-TDD bands
LTE Features	**SC200E-CE/-EM/-NA/-JP and SC206E-EM/-NA:** ● Supports 3GPP Rel-10 Cat 4 ● Supports 1.4/3/5/10/15/20 MHz RF bandwidth ● Supports Multiuser MIMO in DL direction ● Data rate (Max.): − Cat 4 FDD: 150 Mbps (DL)/50 Mbps (UL) − Cat 4 TDD: 130 Mbps (DL)/30 Mbps (UL)
UMTS Features	**SC200E-CE/-EM/-JP and SC206E-EM:** ● Supports 3GPP Rel-9 DC-HSDPA, HSPA+, HSDPA, HSUPA and WCDMA ● Supports QPSK, 16QAM and 64QAM modulations ● Data rate (Max.): − DC-HSDPA: 42 Mbps (DL) − HSUPA: 5.76 Mbps (UL) − WCDMA: 384 kbps (DL)/384 kbps (UL)
CDMA2000 Features	**SC200E-CE:** ● Supports 3GPP2 CDMA2000 1X Advanced and 1xEVDO Rev.A ● EVDO: Max 3.1 Mbps (DL)/Max 1.8 Mbps (UL) ● 1X Advanced: Max 307.2 kbps (DL)/Max 307.2 kbps (UL)
GSM Features	**SC200E-CE/-EM and SC206E-EM:** **R99** ● CSD: 9.6 kbps, 14.4 kbps **GPRS** ● Supports GPRS multi-slot class 33 (33 by default) ● Coding scheme: CS 1–4 ● Max. 107 kbps (DL), 85.6 kbps (UL) **EDGE** ● Supports EDGE multi-slot class 33 (33 by default) ● Supports GMSK and 8-PSK for different MCS (Modulation and Coding Scheme) ● Downlink coding schemes: MCS 1–9

	● Uplink coding schemes: MCS 1–9 ● Max. 296 kbps (DL), 236.8 kbps (UL)
WLAN Features	● 2.4 GHz, 802.11b/g/n, up to 150 Mbps ● 5 GHz, 802.11a/n/ac, up to 433 Mbps ● Supports AP mode and STA mode
Bluetooth Feature [2]	Bluetooth 5.0
GNSS Features [3]	**SC200E-CE/-EM/-JP and SC206E-EM:** ● GPS/GLONASS/BDS/Galileo/QZSS/SBAS, L1 **SC200E-NA and SC206E-NA:** ● GPS/GLONASS/BDS/Galileo/QZSS/SBAS/NavIC, L1 + L5
SMS	● Text and PDU mode ● Point-to-point MO and MT ● SMS cell broadcast
LCM Interface	● Supports one group of 4-lane MIPI DSI ● Supports up to HD+ (1680 × 720) @ 60 fps
Camera Interfaces	● Support two groups of 4-lane MIPI CSI, up to 2.5 Gbps/lane ● Support two cameras (4-lane + 4-lane) or three cameras (4-lane + 2-lane + 1-lane) ● Support up to 25 MP or 13 MP + 13 MP with dual ISPs
Video Codec	● Video encoding + decoding: 720P @ 30 fps + 1080P @ 30 fps ● Encoding: up to 1080P @ 30 fps; Decoding: up to 1080P @ 30 fps
Audio Interfaces	**Audio inputs:** ● Two differential microphone inputs ● One single-ended microphone input **Audio outputs:** ● Class AB stereo headphone output ● Class AB earpiece differential output ● Class AB line out differential output
Audio Codec	● EVS, EVRC, EVRC-B, EVRC-WB ● G.711, G.729A, and G.729AB ● GSM-FR, GSM-EFR, GSM-HR ● AMR-NB, AMR-WB
USB Interface	**Type-C interface type:** ● Complies with both USB 3.1 Gen 1 or USB 2.0 specifications, with transmission rates up to 5 Gbps on USB 3.1 Gen 1 and 480 Mbps on USB 2.0 ● Supports USB OTG ● Used for AT command communication, data transmission, software debugging, and firmware upgrade
UART Interfaces	Three UART interfaces: UART0, UART1, and UART4 (debug UART) ● UART0: four-wire UART interface supporting RTS and CTS hardware flow

[2] The module is compliant with all mandatory Bluetooth 5.0 features, but does not support Bluetooth 5.0 optional features like 2 Mbps BLE, Advanced Advertising Extension, etc.
[3] SC200E-WF and SC206E-WF do not support GNSS.

	control ● UART1: two-wire UART interface ● UART4 (debug UART): two-wire UART interface dedicated for debugging
SD Card Interface	● Supports SD 3.0 ● Supports SD card hot-plug
(U)SIM Interfaces	● Two (U)SIM interfaces ● Support (U)SIM cards: 1.8/2.95 V ● Support Dual SIM Dual Standby (supported by default)
I2C Interfaces	● Four I2C interfaces ● Used for peripherals such as camera, sensor, touch panel, etc.
ADC Interface	One generic ADC interface, up to 15-bit resolution
Real Time Clock	Supported
Antenna Interfaces	**SC200E-CE/-EM/-NA/-JP and SC206E-EM/-NA:** Main antenna, Rx-diversity antenna, GNSS antenna and Wi-Fi/Bluetooth antenna interfaces **SC200E-WF and SC206E-WF:** Wi-Fi/Bluetooth antenna interface
Physical Characteristics	● Size: (40.5 ±0.15) mm × (40.5 ±0.15) mm × (2.85 ±0.2) mm ● Package: LCC + LGA ● Weight: Approx. 10.3 g
Temperature Range	● Operating temperature range [4]: -35 °C to +75 °C ● Storage temperature range: -40 °C to +90 °C
Firmware Upgrade	● USB interface ● OTA
RoHS	All hardware components are fully compliant with EU RoHS directive.

2.3. EVB Kit

To help you develop applications with the module, Quectel supplies an evaluation board (Smart EVB G2) with accessories to control or test the module. For more details, see ***document [1]***.

[4] Within the operating temperature range, the module meets 3GPP specifications.

3 Application Interfaces

3.1. General Description

SC200E and SC206E series are SMD type modules with 146 LCC pins and 128 LGA pins. The following interfaces and functions are described in detail in these subsequent chapters:

- Power supply
- VRTC
- Power output
- Charging interface
- USB interface
- UART interfaces
- (U)SIM interfaces
- SD card interface
- GPIO interfaces
- I2C interfaces
- ADC interface
- Motor drive interface
- LCM interface
- Flash interface
- Touch panel interface
- Camera interfaces
- Sensor interface
- Audio interfaces
- USB_BOOT interface

3.2. Pin Assignment

The following figure shows the pin assignment of the module.

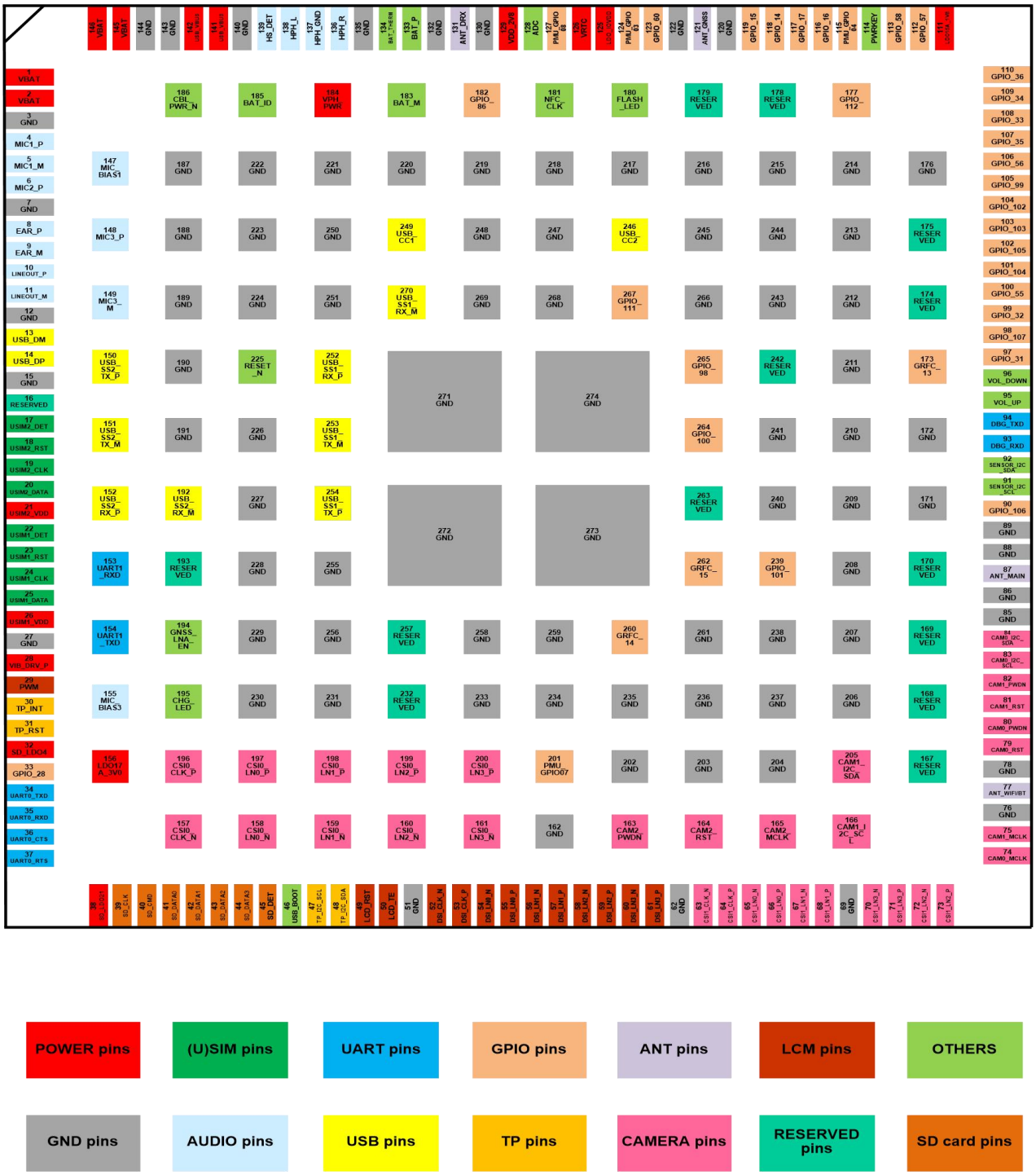

Figure 2: Pin Assignment (Top View)

3.3. Pin Description

Table 8: I/O Parameter Definition

Type	Description
AI	Analog Input
AO	Analog Output
AIO	Analog Input/Output
DI	Digital Input
DO	Digital Output
DIO	Digital Input/Output
OD	Open Drain
PI	Power Input
PO	Power Output
PIO	Power Input/Output

Table 9: Pin Description

Power Supply					
Pin Name	**Pin No.**	**I/O**	**Description**	**DC Characteristics**	**Comment**
VBAT	1, 2, 145, 146	PIO	Power supply for the module	Vmin = 3.55 V Vnom = 3.8 V Vmax = 4.4 V	Provide sufficient current up to 3 A. It is suggested to use a TVS for surge protection.
VPH_PWR	184	PO	Power supply for peripherals	Vmin = 3.55 V Vnom = 3.8 V Vmax = 4.4 V	This pin is used to power peripheral devices. Maximum output current is 1 A.
LDO15A_1V8	111	PO	1.8 V output	Vnom = 1.8 V $I_O$max = 200 mA	The power supply for LCM, sensor, cameras and I2C pull-up circuits.

LDO17A_3V0	156	PO	3.0 V output	Vnom = 3.0 V $I_O$max = 192 mA	The power supply for TP and sensor.
LDO_IOVDD	125	PO	1.8 V output	Vnom = 1.8 V $I_O$max = 300 mA	The power is reserved for LCM and camera's IOVDD. This voltage is not adjustable.
VRTC	126	PIO	Power supply for RTC	$V_O$max = 3.2 V $V_I$min = 2.5 V $V_I$max = 3.2 V	If unused, keep it open.
VDD_2V8	129	PO	2.8 V output	Vnom = 2.8 V $I_O$max = 500 mA	The power supply for camera's AVDD. This voltage is not adjustable.
Audio Interfaces					
Pin Name	**Pin No.**	**I/O**	**Description**	**DC Characteristics**	**Comment**
MIC_BIAS1	147	PO	Bias voltage 1 output for microphone	$V_O$min = 1.6 V $V_O$max = 2.85 V	The rated output current is 3 mA.
MIC1_P	4	AI	Microphone input for channel 1 (+)		
MIC1_M	5	AI	Microphone input for channel 1 (-)		
MIC2_P	6	AI	Microphone input for headset (+)		
MIC3_P	148	AI	Microphone input for channel 3 (+)		
MIC3_M	149	AI	Microphone input for channel 3 (-)		
MIC_BIAS3	155	PO	Bias voltage 3 output for microphone	Vnom = 1.8 V	The rated output current is 3 mA. The output voltage is fixed at 1.8 V and cannot be adjusted.
EAR_P	8	AO	Earpiece output (+)		
EAR_M	9	AO	Earpiece output (-)		
LINEOUT_P	10	AO	Audio line differential output (+)		The typical output voltage is 2 Vrms.
LINEOUT_M	11	AO	Audio line differential output (-)		
HPH_R	136	AO	Headphone right channel output		

HPH_GND	137	AO	Headphone reference ground		
HPH_L	138	AO	Headphone left channel output		
HS_DET	139	AI	Headset hot-plug detect		High level by default.
USB Interface					
Pin Name	**Pin No.**	**I/O**	**Description**	**DC Characteristics**	**Comment**
USB_VBUS	141, 142	PIO	Charging power input. Power supply output for OTG device. USB/adaptor insertion detection	Vmax = 6.0 V Vmin = 4.0 V Vnom = 5.0 V	The maximum output current is 500 mA.
USB_DM	13	AIO	USB differential data (-)		90 Ω differential impedance. USB 2.0 standard compliant.
USB_DP	14	AIO	USB differential data (+)		
USB_SS1_RX_P	252	AI	USB 3.1 channel 1 super-speed receive (+)		90 Ω differential impedance. USB 3.1 standard compliant.
USB_SS1_RX_M	270	AI	USB 3.1 channel 1 super-speed receive (-)		
USB_SS1_TX_P	254	AO	USB 3.1 channel 1 super-speed transmit (+)		
USB_SS1_TX_M	253	AO	USB 3.1 channel 1 super-speed transmit (-)		
USB_SS2_RX_P	152	AI	USB 3.1 channel 2 super-speed receive (+)		
USB_SS2_RX_M	192	AI	USB 3.1 channel 2 super-speed receive (-)		
USB_SS2_TX_P	150	AO	USB 3.1 channel 2 super-speed transmit (+)		
USB_SS2_TX_M	151	AO	USB 3.1 channel 2 super-speed transmit (-)		
USB_CC1	249	AI	USB Type-C detect 1		
USB_CC2	246	AI	USB Type-C detect 2		
(U)SIM Interfaces					
Pin Name	**Pin No.**	**I/O**	**Description**	**DC Characteristics**	**Comment**
USIM1_VDD	26	PO	(U)SIM1 card power supply	$I_O$max = 67 mA **1.8 V (U)SIM:**	Either 1.8 V or 2.95 V (U)SIM card is supported and can

				Vmax = 1.85 V Vmin = 1.75 V **2.95 V (U)SIM:** Vmax = 3.1 V Vmin = 2.8 V	be identified automatically by the module.
USIM1_DATA	25	DIO	(U)SIM1 card data	V_{IL}max = 0.2 × USIM1_VDD V_{IH}min = 0.7 × USIM1_VDD V_{OL}max = 0.4 V V_{OH}min = 0.8 × USIM1_VDD	Externally pulled up to USIM1_VDD with a 10 K resistor.
USIM1_CLK	24	DO	(U)SIM1 card clock	V_{OL}max = 0.4 V V_{OH}min = 0.8 × USIM1_VDD	
USIM1_RST	23	DO	(U)SIM1 card reset		
USIM1_DET	22	DI	(U)SIM1 card hot-plug detect	V_{IL}max = 0.63 V V_{IH}min = 1.17 V	Active low. Externally pulled up to 1.8 V. If unused, keep it open.
USIM2_VDD	21	PO	(U)SIM2 card power supply	$I_O$max = 67 mA **1.8 V (U)SIM:** Vmax = 1.85 V Vmin = 1.75 V **2.95 V (U)SIM:** Vmax = 3.1 V Vmin = 2.8 V	Either 1.8 V or 2.95 V (U)SIM card is supported and can be identified automatically by the module.
USIM2_DATA	20	DIO	(U)SIM2 card data	V_{IL}max = 0.2 × USIM2_VDD V_{IH}min = 0.7 × USIM2_VDD V_{OL}max = 0.4 V V_{OH}min = 0.8 × USIM2_VDD	Externally pulled up to USIM2_VDD with a 10 K resistor.
USIM2_CLK	19	DO	(U)SIM2 card clock	V_{OL}max = 0.4 V V_{OH}min = 0.8 × USIM2_VDD	
USIM2_RST	18	DO	(U)SIM2 card reset		
USIM2_DET	17	DI	(U)SIM2 card hot-plug detect	V_{IL}max = 0.63 V V_{IH}min = 1.17 V	Active low. Externally pulled up to 1.8 V. If unused, keep it

					open.
SD Card Interface					
Pin Name	**Pin No.**	**I/O**	**Description**	**DC Characteristics**	**Comment**
SD_CLK	39	DO	SD card clock	**1.8 V SD card:** V_{OL}max = 0.45 V V_{OH}min = 1.4 V **2.95 V SD card:** V_{OL}max = 0.37 V V_{OH}min = 2.2 V	50 Ω characteristic impedance.
SD_CMD	40	DIO	SD card command	**1.8 V SD card:** V_{IL}max = 0.58 V V_{IH}min = 1.27 V V_{OL}max = 0.45 V V_{OH}min = 1.4 V **2.95 V SD card:** V_{IL}max = 0.73 V V_{IH}min = 1.84 V V_{OL}max = 0.37 V V_{OH}min = 2.2 V	
SD_DATA0	41	DIO	SDIO data bit 0		
SD_DATA1	42	DIO	SDIO data bit 1		
SD_DATA2	43	DIO	SDIO data bit 2		
SD_DATA3	44	DIO	SDIO data bit 3		
SD_DET	45	DI	SD card hot-plug detect	V_{IL}max = 0.63 V V_{IH}min = 1.17 V	Active low.
SD_LDO21	38	PO	SD card power supply	2.95 V/ 841 mA	-
SD_LDO4	32	PO	1.8/2.95 V output power for SD card pull-up circuits	1.8/2.95 V 22 mA	-
Touch Panel Interface					
Pin Name	**Pin No.**	**I/O**	**Description**	**DC Characteristics**	**Comment**
TP_RST	31	DO	TP reset	V_{OL}max = 0.45 V V_{OH}min = 1.35 V	1.8 V power domain. Active low.
TP_INT	30	DI	TP interrupt	V_{IL}max = 0.63 V V_{IH}min = 1.17 V	1.8 V power domain.
TP_I2C_SCL	47	OD	TP I2C clock		Need to be pulled up to 1.8 V externally. Can be used for other I2C devices.
TP_I2C_SDA	48	OD	TP I2C data		
LCM Interface					
Pin Name	**Pin No.**	**I/O**	**Description**	**DC Characteristics**	**Comment**
LCD_RST	49	DO	LCD reset	V_{OL}max = 0.45 V	1.8 V power domain.

				V_{OH}min = 1.35 V	
LCD_TE	50	DI	LCD tearing effect	V_{IL}max = 0.63 V V_{IH}min = 1.17 V	
DSI_CLK_N	52	AO	LCD MIPI clock (-)		
DSI_CLK_P	53	AO	LCD MIPI clock (+)		
DSI_LN0_N	54	AO	LCD MIPI lane 0 data (-)		
DSI_LN0_P	55	AO	LCD MIPI lane 0 data (+)		
DSI_LN1_N	56	AO	LCD MIPI lane 1 data (-)		
DSI_LN1_P	57	AO	LCD MIPI lane 1 data (+)		
DSI_LN2_N	58	AO	LCD MIPI lane 2 data (-)		
DSI_LN2_P	59	AO	LCD MIPI lane 2 data (+)		
DSI_LN3_N	60	AO	LCD MIPI lane 3 data (-)		
DSI_LN3_P	61	AO	LCD MIPI lane 3 data (+)		
PWM	29	DO	PWM output		1.8 V power domain.
Camera Interfaces					
Pin Name	**Pin No.**	**I/O**	**Description**	**DC Characteristics**	**Comment**
CSI1_CLK_N	63	AI	MIPI CSI1 clock (-)		
CSI1_CLK_P	64	AI	MIPI CSI1 clock (+)		
CSI1_LN0_N	65	AI	MIPI CSI1 lane 0 data (-)		
CSI1_LN0_P	66	AI	MIPI CSI1 lane 0 data (+)		
CSI1_LN1_N	67	AI	MIPI CSI1 lane 1 data (-)		
CSI1_LN1_P	68	AI	MIPI CSI1 lane 1 data (+)		
CSI1_LN2_N	72	AI	MIPI CSI1 lane 2 data (-)		
CSI1_LN2_P	73	AI	MIPI CSI1 lane 2 data (+)		
CSI1_LN3_N	70	AI	MIPI CSI1 lane 3 data (-)		
CSI1_LN3_P	71	AI	MIPI CSI1 lane 3 data (+)		
CSI0_CLK_N	157	AI	MIPI CSI0 clock (-)		
CSI0_CLK_P	196	AI	MIPI CSI0 clock (+)		
CSI0_LN0_N	158	AI	MIPI CSI0 lane 0 data (-)		
CSI0_LN0_P	197	AI	MIPI CSI0 lane 0 data (+)		

CSI0_LN1_N	159	AI	MIPI CSI0 lane 1 data (-)		
CSI0_LN1_P	198	AI	MIPI CSI0 lane 1 data (+)		
CSI0_LN2_N	160	AI	MIPI CSI0 lane 2 data (-)		
CSI0_LN2_P	199	AI	MIPI CSI0 lane 2 data (+)		
CSI0_LN3_N	161	AI	MIPI CSI0 lane 3 data (-)		
CSI0_LN3_P	200	AI	MIPI CSI0 lane 3 data (+)		
CAM0_I2C_SCL	83	OD	I2C clock of camera 0		Need to be pulled up to 1.8 V externally. Can only be used for camera.
CAM0_I2C_SDA	84	OD	I2C data of camera 0		
CAM0_PWDN	80	DO	Power down of camera 0	V_{OL}max = 0.45 V V_{OH}min = 1.35 V	1.8 V power domain.
CAM1_PWDN	82	DO	Power down of camera 1		
CAM2_PWDN	163	DO	Power down of camera 2		
CAM0_MCLK	74	DO	Master clock of camera 0		
CAM1_MCLK	75	DO	Master clock of camera 1		
CAM2_MCLK	165	DO	Master clock of camera 2		
CAM0_RST	79	DO	Reset of camera 0		
CAM1_RST	81	DO	Reset of camera 1		
CAM2_RST	164	DO	Reset of camera 2		
CAM1_I2C_SCL	166	OD	I2C clock of camera 1		Need to be pulled up to 1.8 V externally. Can only be used for camera.
CAM1_I2C_SDA	205	OD	I2C data of camera 1		
Flash & Torch Interface					
Pin Name	**Pin No.**	**I/O**	**Description**	**DC Characteristics**	**Comment**
FLASH_LED	180	AO	Flash/torch driver output	$I_O$max = 1 A	Supports flash and torch modes.
Indication Interface					
Pin Name	**Pin No.**	**I/O**	**Description**	**DC Characteristics**	**Comment**
CHG_LED	195	AI	Indicate the module's charging status	$I_I$max = 5 mA	
Keypad Interfaces					
Pin Name	**Pin**	**I/O**	**Description**	**DC Characteristics**	**Comment**

	No.				
PWRKEY	114	DI	Turn on/off the module		Pulled up to 1.1 V internally. Active low.
VOL_UP	95	DI	Volume up	V_{IL}max = 0.63 V V_{IH}min = 1.17 V	If unused, keep it open. Cannot be externally pulled up. 1.8 V power domain.
VOL_DOWN	96	DI	Volume down	V_{IL}max = 0.63 V V_{IH}min = 1.17 V	
RESET_N	225	DI	Reset the module		Disabled by default and it can be enabled via software configuration.
UART Interfaces					
Pin Name	**Pin No.**	**I/O**	**Description**	**DC Characteristics**	**Comment**
DBG_TXD	94	DO	Debug UART transmit	V_{OL}max = 0.45 V V_{OH}min = 1.35 V	1.8 V power domain. If unused, keep it open.
DBG_RXD	93	DI	Debug UART receive	V_{IL}max = 0.63 V V_{IH}min = 1.17 V	
UART0_TXD	34	DO	UART0 transmit	V_{OL}max = 0.45 V V_{OH}min = 1.35 V	
UART0_RXD	35	DI	UART0 receive	V_{IL}max = 0.63 V V_{IH}min = 1.17 V	
UART0_RTS	37	DO	DCE request to send signal to DTE	V_{OL}max = 0.45 V V_{OH}min = 1.35 V	
UART0_CTS	36	DI	DCE clear to send signal from DTE	V_{IL}max = 0.63 V V_{IH}min = 1.17 V	
UART1_TXD	154	DO	UART1 transmit	V_{OL}max = 0.45 V V_{OH}min = 1.35 V	
UART1_RXD	153	DI	UART1 receive	V_{IL}max = 0.63 V V_{IH}min = 1.17 V	
Sensor I2C Interface					
Pin Name	**Pin No.**	**I/O**	**Description**	**DC Characteristics**	**Comment**
SENSOR_I2C_SCL	91	OD	I2C clock for external sensor		Need to be pulled up to 1.8 V externally. Can only be used for sensors.
SENSOR_I2C_SDA	92	OD	I2C data for external sensor		
RF Antenna Interfaces					
Pin Name	**Pin No.**	**I/O**	**Description**	**DC Characteristics**	**Comment**

ANT_MAIN	87	AIO	Main antenna interface		50 Ω impedance.
ANT_GNSS	121	AI	GNSS antenna interface		
ANT_DRX	131	AI	Diversity antenna interface		
ANT_WIFI/BT	77	AIO	Wi-Fi/Bluetooth antenna interface		
Antenna Tuner Control Interfaces					
Pin Name	**Pin No.**	**I/O**	**Description**	**DC Characteristics**	**Comment**
GRFC_13	173	DIO	Generic RF controller		Cannot be multiplexed into a generic GPIO. Cannot be pulled up when the module is turning on.
GRFC_14	260	DIO	Generic RF controller		
GRFC_15	262	DIO	Generic RF controller		Cannot be multiplexed into a generic GPIO.
ADC Interface					
Pin Name	**Pin No.**	**I/O**	**Description**	**DC Characteristics**	**Comment**
ADC	128	AI	General-purpose ADC interface		The maximum input voltage is 1.875 V.
Charging Interfaces					
Pin Name	**Pin No.**	**I/O**	**Description**	**DC Characteristics**	**Comment**
BAT_P	133	AI	Battery voltage detect (+)		Cannot be kept open.
BAT_M	183	AI	Battery voltage detect (-)		
BAT_ID	185	AI	Battery type detect	$V_I$min = 0 V $V_I$max = 1.875 V	Internally pulled down with a 100 kΩ resistor. If unused, keep it open.
BAT_THERM	134	AI	Battery temperature detect		Internally pull up by default. Supports 47 kΩ NTC thermistor by default. If unused, connect it to GND with a 47 kΩ resistor.
Vibration Motor Driver Interface					

Pin Name	Pin No.	I/O	Description	DC Characteristics	Comment
VIB_DRV_P	28	PO	Vibration motor driver output control	$V_O$min = 1.5 V $V_O$max = 3.3 V $I_O$max = 100 mA	Connect it to the positive pole of the motor.
Other Interfaces					
Pin Name	**Pin No.**	**I/O**	**Description**	**DC Characteristics**	**Comment**
USB_BOOT	46	DI	Force the module into emergency download mode		Force the module to enter emergency download mode by pulling this pin up to LDO15A_1V8 when the module is turning on.
GNSS_LNA_EN	194	DO	GNSS LNA enable control		
NFC_CLK	181	DO	NFC clock		The default output frequency is 38.4 MHz.
CBL_PWR_N	186	DI	Cable power-on; Initiate power-on when grounded		The module cannot be turned off when this pin is pulled down. If unused, keep it open.
GPIO Interfaces					
Pin Name	**Pin No.**	**I/O**	**Description**	**DC Characteristics**	**Comment**
GPIO_28	33	DIO	General-purpose input/output		
GPIO_31	97	DIO	General-purpose input/output		
GPIO_32	99	DIO	General-purpose input/output		
GPIO_33	108	DIO	General-purpose input/output		
GPIO_34	109	DIO	General-purpose input/output		
GPIO_35	107	DIO	General-purpose input/output		
GPIO_36	110	DIO	General-purpose input/output		

GPIO_55	100	DIO	General-purpose input/output	
GPIO_56	106	DIO	General-purpose input/output	
GPIO_57	112	DIO	General-purpose input/output	Cannot be pulled up when the module is turning on.
GPIO_58	113	DIO	General-purpose input/output	
GPIO_60	123	DIO	General-purpose input/output	
GPIO_86	182	DIO	General-purpose input/output	
GPIO_112	177	DIO	General-purpose input/output	
GPIO_111	267	DIO	General-purpose input/output	
GPIO_98	265	DIO	General-purpose input/output	
GPIO_99	105	DIO	General-purpose input/output	
GPIO_100	264	DIO	General-purpose input/output	
GPIO_101	239	DIO	General-purpose input/output	
GPIO_102	104	DIO	General-purpose input/output	
GPIO_103	103	DIO	General-purpose input/output	
GPIO_104	101	DIO	General-purpose input/output	
GPIO_105	102	DIO	General-purpose input/output	
GPIO_106	90	DIO	General-purpose input/output	
GPIO_107	98	DIO	General-purpose input/output	
GPIO_14	118	DIO	General-purpose input/output	
GPIO_15	119	DIO	General-purpose input/output	
GPIO_16	116	DIO	General-purpose input/output	

GPIO_17	117	DIO	General-purpose input/output
PMU_GPIO03	124	DIO	General-purpose input/output
PMU_GPIO04	115	DIO	General-purpose input/output
PMU_GPIO08	127	DIO	General-purpose input/output
PMU_GPIO07	201	DIO	General-purpose input/output
GND			
Pin Name	**Pin No.**		
GND	3, 7, 12, 15, 27, 51, 62, 69, 76, 78, 85, 86, 88, 89, 120, 122, 130, 132, 135, 140, 143, 144, 162, 171, 172, 176, 187–191, 202–204, 206–224, 226–231, 233–238, 240, 241, 243–245, 247, 248, 250, 251, 255, 256, 258, 259, 261, 266, 268, 269, 271–274		
RESERVED			
Pin Name	**Pin No.**		
RESERVED	16, 167, 168, 169, 170, 174, 175, 178, 179, 193, 232, 242, 257, 263		

NOTE

1. Keep all RESERVED and unused pins unconnected.
2. Connect all GND pins to ground.

3.4. Power Supply

3.4.1. Power Supply Pins

The module provides four VBAT pins for connection with external power supply.

3.4.2. Voltage Stability Requirements

The power supply range of the module is 3.55–4.4 V, and the recommended value is 3.8 V. The power supply performance, such as load capacity, voltage ripple, etc. will directly influence the module's performance and stability. Under ultimate conditions, the transient peak current of the module may surge up to 3 A. If the power supply capacity is not sufficient, there will be a risk that the module may power off automatically if the voltage drops below 3.1 V. Therefore, make sure the input voltage never drops below 3.1 V.

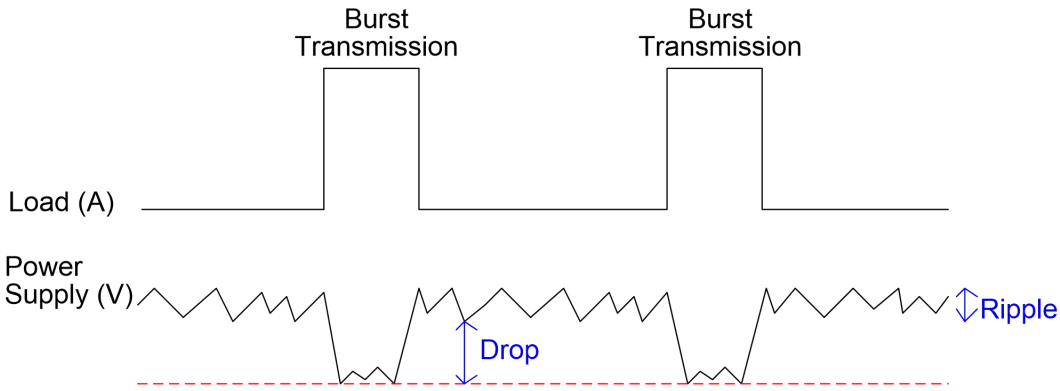

Figure 3: Power Supply Limits During Burst Transmission

To decrease voltage drop, use a bypass capacitor of about 100 μF with low ESR (ESR ≤ 0.7 Ω), and reserve a multi-layer ceramic chip capacitor (MLCC) array due to its ultra-low ESR. It is recommended to use three ceramic capacitors (100 nF, 33 pF, 10 pF) to compose the MLCC array and place these capacitors close to VBAT pins. Additionally, add a 4.7 μF capacitor in parallel. The main power supply from an external application has to be a single voltage source and can be expanded to two sub paths with star structure. The width of VBAT trace should be no less than 3 mm. In principle, the longer the VBAT trace is, the wider it should be.

In addition, to guarantee the stability of the power source, please use a TVS and place it as close to the VBAT pins as possible to enhance surge protection. The following figure shows the star topology of the power supply.

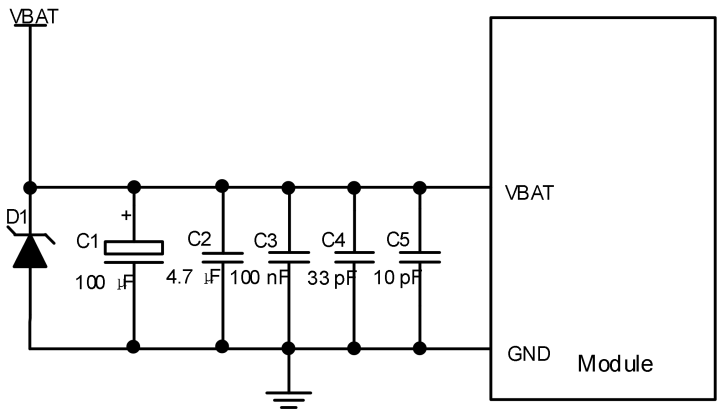

Figure 4: Reference Circuit for Power Supply

3.4.3. Reference Design for Power Supply

The power design for the module is very important, as the performance of the module largely depends on the power source. The power supply of the module should be able to provide sufficient current of 3 A at least. If the voltage difference between the input and output is not too big, use an LDO when supplying power to the module. If there is a big voltage difference between the input source and the desired output (VBAT), a buck converter is recommended.

The following figure shows a reference design for +5 V input power source. The typical output voltage is 3.8 V and the maximum load current is 5.0 A.

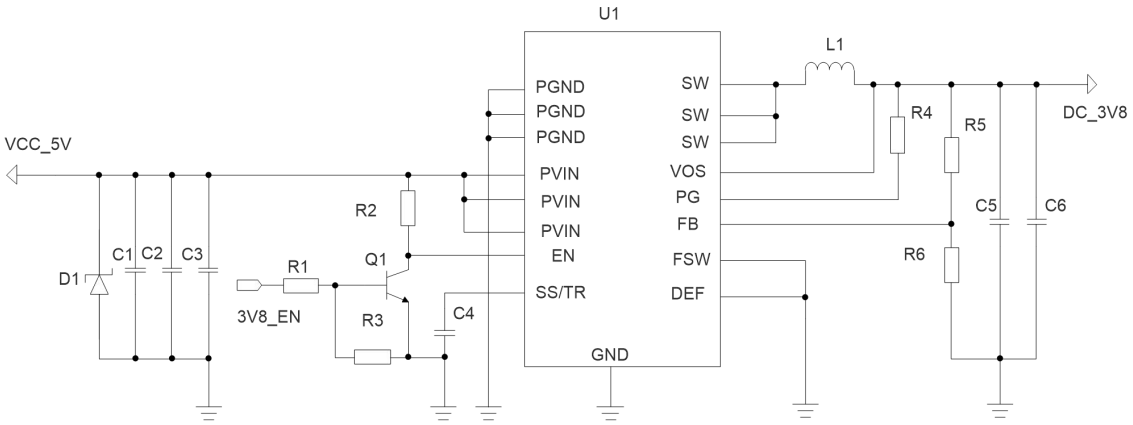

Figure 5: Reference Circuit of Power Supply

NOTE

1. In an abnormal state, it is recommended to restart the module by switching off and then switching back on the power supply.
2. The module supports battery charging by default. If the above power supply design is adopted, disable the charging function by software, or connect VBAT to a Schottky diode in series to avoid the reverse current to the power supply IC.

3.5. Turn On/Off

3.5.1. Turn On with PWRKEY

The module can be turned on by driving the PWRKEY pin low for at least 1.6 s. The PWRKEY pin is pulled up to 1.1 V internally. It is recommended to use an open collector driver to control PWRKEY. A simple reference circuit is illustrated in the following figure.

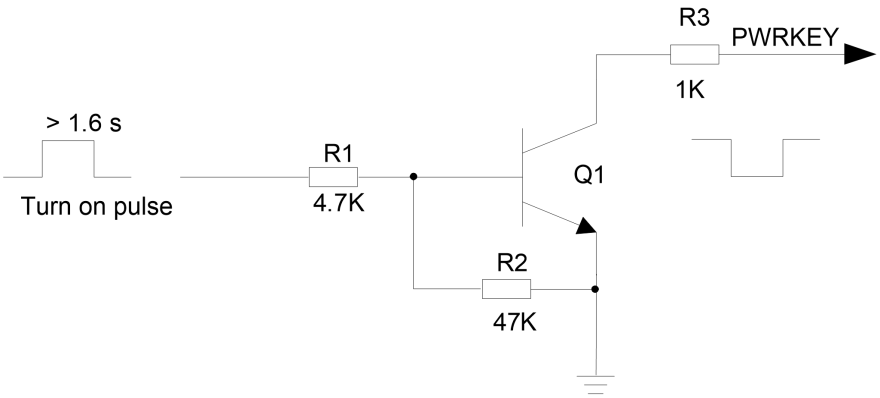

Figure 6: Turn On Module with Open Collector Driver

Another way to control PWRKEY is by using a button directly. You must place a TVS nearby the button for ESD protection. A reference circuit is shown by the following figure.

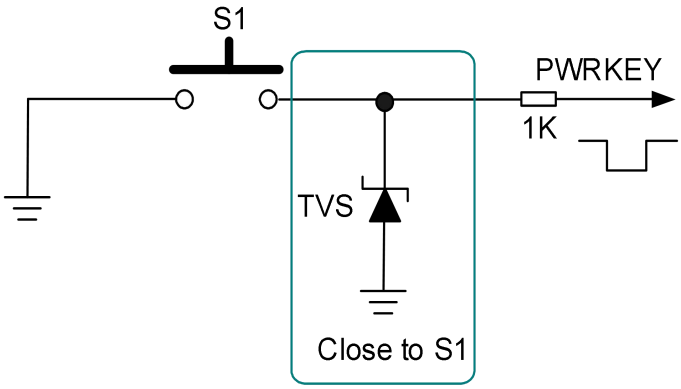

Figure 7: Turn On Module Using Button

The turning-on scenario is illustrated in the following figure.

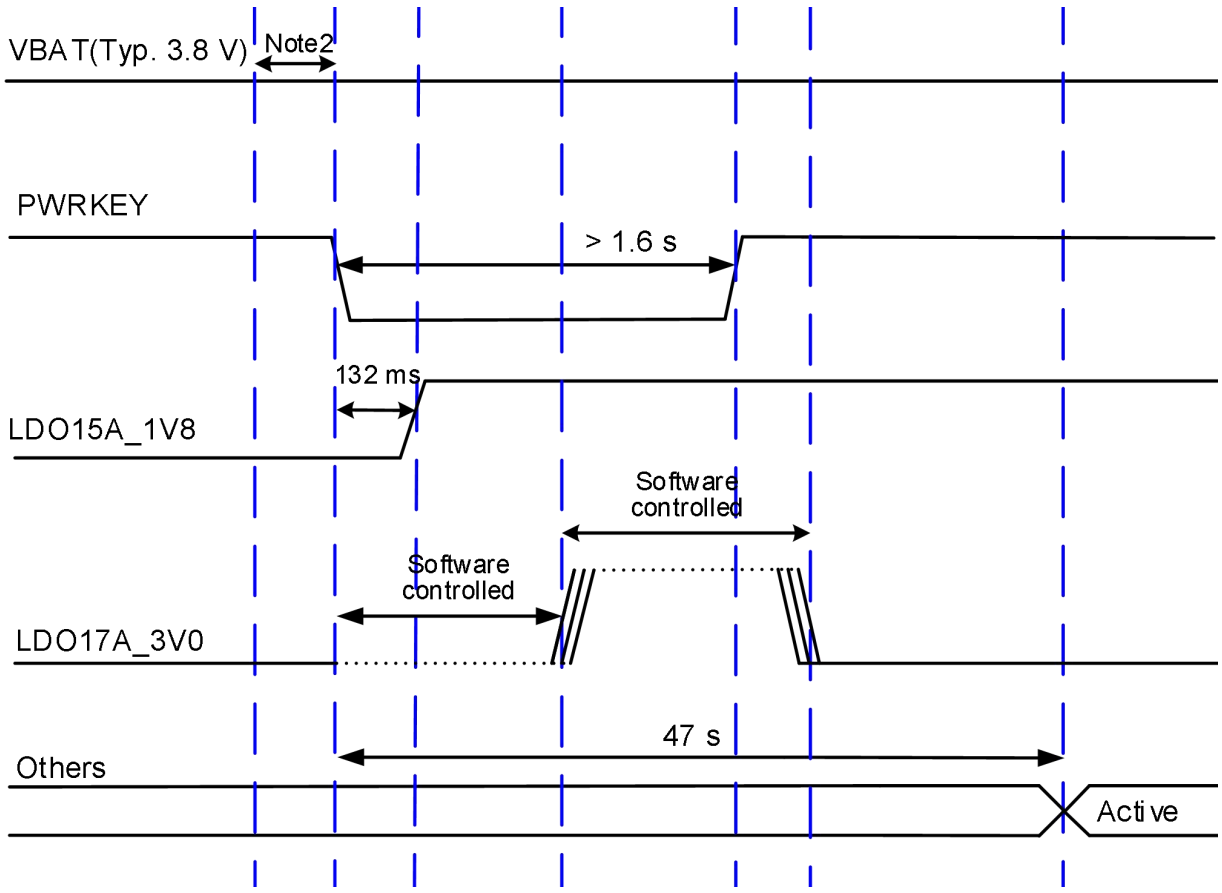

Figure 8: Turn-on Timing

NOTE

1. When the module is turned on for the first time, the turn-on timing may be different from that shown above.
2. Make sure that VBAT is stable before pulling down PWRKEY. It is recommended to wait until VBAT is stable at 3.8 V for at least 30 ms before pulling down PWRKEY. Additionally, do not keep pulling PWRKEY down all the time.

3.5.2. Turn Off

Drive the PWRKEY pin low for at least 1 s, and then choose to turn off the module when the prompt window comes up.

You can also force the module to turn off by driving PWRKEY low for at least 8 s. The forced turn-off timing is illustrated by the following figure.

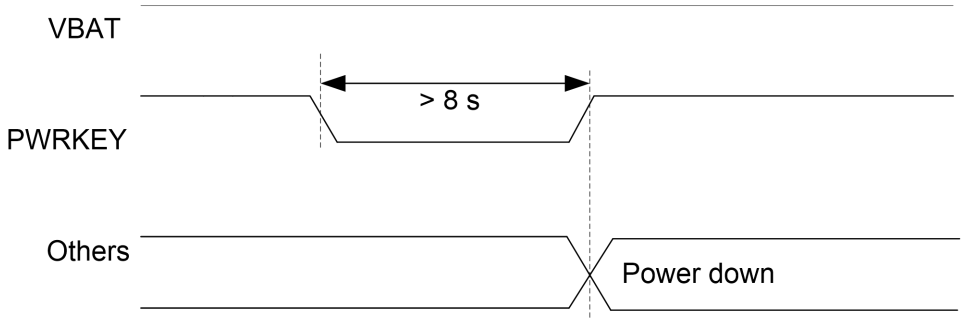

Figure 9: Forced Turn-off Timing

3.6. VRTC

The RTC (Real Time Clock) can be powered by an external power source through VRTC when the module is powered down and there is no power supplied to VBAT. The external power source can be a rechargeable battery (such as a coin cell) according to application demands. A reference circuit design is shown below.

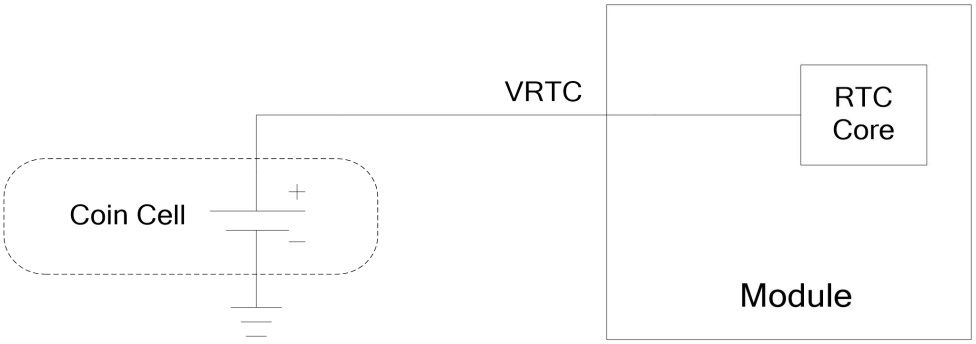

Figure 10: RTC Powered by Coin Cell

If RTC is ineffective, it can be synchronized through the network after the module is turned on. The recommended input voltage range for VRTC is 2.5–3.2 V and the recommended typical value is 3.0 V.

3.7. Power Output

The module supports output of regulated voltages for peripheral circuits. In applications, it is recommended to use a 33 pF and a 10 pF capacitor in parallel in the circuit to suppress high-frequency noise.

Table 10: Power Description

Pin Name	Pin No.	Default Voltage (V)	Driving Current (mA)	@ Idle State
LDO15A_1V8	111	1.8	200	Keeps ON
LDO_IOVDD	125	1.8	300	-
VDD_2V8	129	2.8	500	-
LDO17A_3V0	156	3.0	192	-
SD_LDO21	38	2.95	841	-
SD_LDO4	32	1.8/2.95	22	-
USIM1_VDD	26	1.8/2.95	67	-
USIM2_VDD	21	1.8/2.95	67	-

3.8. Charging Interface

The module supports battery charging. The battery charger IC in the module supports trickle charging, constant current charging and constant voltage charging modes, which optimize the charging procedure for Li-ion batteries.

- Trickle charging: There are two steps in this mode. When the battery voltage is below 2.1 V, a 90 mA trickle charging current is applied to the battery. When the battery voltage is charged up and is between 2.1 V and 3.4 V, the charging current can be set to 400 mA maximally.
- Constant current mode (CC mode): When the battery is increased to 3.4 to 4.35 V, the system will switch to CC mode. The maximum charging current is 1.85 A when an adapter is used for battery charging, and the maximum charging current is 450 mA for USB charging.
- Constant voltage mode (CV mode): When the battery voltage reaches the final value 4.35 V, the system will switch to CV mode and the charging current will decrease gradually. When the battery level reaches 100 %, charging is completed.

Table 11: Pin Definition of Charging Interface

Pin Name	Pin No.	I/O	Description	Comment
BAT_P	133	AI	Battery voltage detect (+)	Cannot be kept open.
BAT_M	183	AI	Battery voltage detect (-)	
BAT_THERM	134	AI	Battery temperature detect	Internally pulled up by default. Supports 47 kΩ NTC thermistor by default. If unused, connect it to GND with a 47 kΩ resistor.
BAT_ID	185	AI	Battery type detect	Internally pulled down with a 100 kΩ resistor. If unused, keep it open.

The module supports battery temperature detection in the condition that the battery integrates a thermistor (47 kΩ 1 % NTC thermistor with a B-constant of 4050 K by default) and the thermistor is connected to BAT_THERM pin. If the BAT_THERM pin is not connected, there will be malfunctions such as battery charging failure, battery level display error, etc. The battery charge temperature range varies with different types of batteries.

A reference design for the battery charging circuit is shown below.

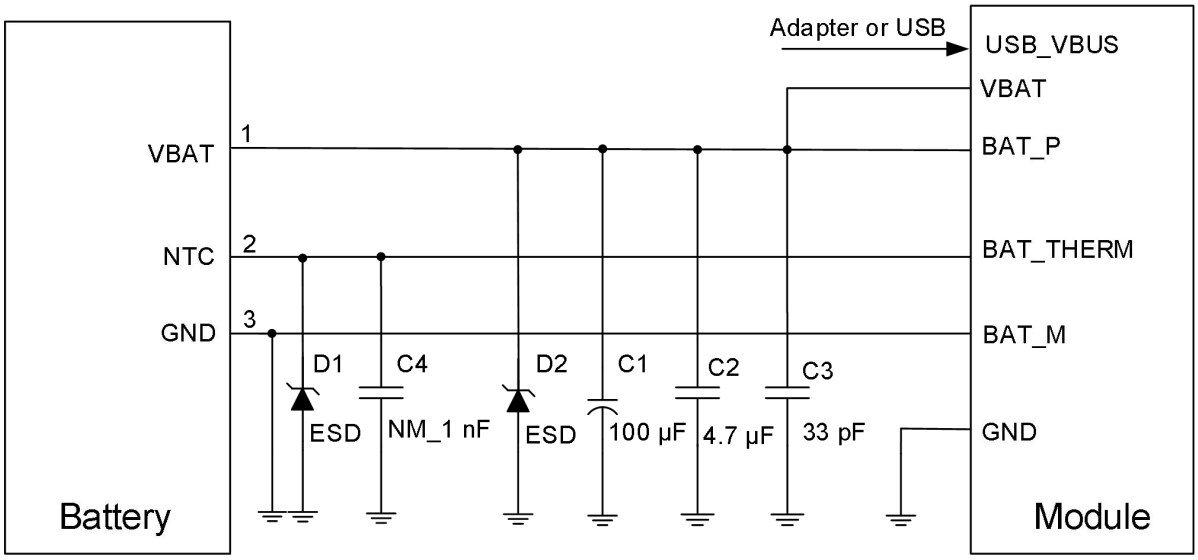

Figure 11: Reference Design for Battery Charging Circuit

Mobile devices such as mobile phones or handheld POS systems are powered by batteries. For different batteries, you should modify the charging and discharging curve correspondingly to achieve the best performance.

If the thermistor is not available in the battery, or an adapter is utilized to power the module, you must connect BAT_THERM to GND via a 47 kΩ resistor. Otherwise, the system may mistakenly judge that the battery temperature is abnormal, and therefore cause battery charging failure.

BAT_P and BAT_M must be connected. Otherwise, exceptions in voltage detection will be caused, with associated problems of turn-on/off and battery charging/discharging.

3.9. USB Interface (Type-C)

The module provides one USB interface which complies with both USB 3.1 Gen 1 and USB 2.0 specifications and supports SuperSpeed (5 Gbps) and high-speed (480 Mbps), and full-speed (12 Mbps) modes. The USB interface supports USB OTG and is used for AT command transmission, data transmission, software debugging and firmware upgrade.

The module only supports USB Type-C. The USB interface has one USB 2.0 compliant high-speed differential channel (USB_DP, USB_DM) and one USB 3.1 compliant SuperSpeed differential channel (USB_SS1_RX_P/M, USB_SS1_TX_P/M and USB_SS2_RX_P/M, USB_SS2_TX_P/M).

When Type-C is plugged in with one side up, the external device is detected by USB_CC1, and the data will be transmitted through USB_SS1; when it is plugged in with the other side up, the external device is detected by USB_CC2, and the data will be transmitted through USB_SS2. The following table shows the pin definition of USB interface.

Table 12: Pin Definition of USB Interface

Pin Name	Pin No.	I/O	Description	Comment
USB_VBUS	141, 142	PIO	Charging power input. Power supply output for OTG device. USB/adaptor insertion detection	Maximum output current is 500 mA.
USB_DM	13	AIO	USB differential data (-)	90 Ω differential impedance. USB 2.0 standard compliant.
USB_DP	14	AIO	USB differential data (+)	
USB_SS1_RX_P	252	AI	USB 3.1 channel 1 super-speed receive (+)	90 Ω differential impedance. USB 3.1 standard compliant.
USB_SS1_RX_M	270	AI	USB 3.1 channel 1 super-speed receive (-)	
USB_SS1_TX_P	254	AO	USB 3.1 channel 1 super-speed transmit (+)	
USB_SS1_TX_M	253	AO	USB 3.1 channel 1 super-speed transmit (-)	

USB_SS2_RX_P	152	AI	USB 3.1 channel 2 super-speed receive (+)
USB_SS2_RX_M	192	AI	USB 3.1 channel 2 super-speed receive (-)
USB_SS2_TX_P	150	AO	USB 3.1 channel 2 super-speed transmit (+)
USB_SS2_TX_M	151	AO	USB 3.1 channel 2 super-speed transmit (-)
USB_CC1	249	AI	USB Type-C detect 1
USB_CC2	246	AI	USB Type-C detect 2

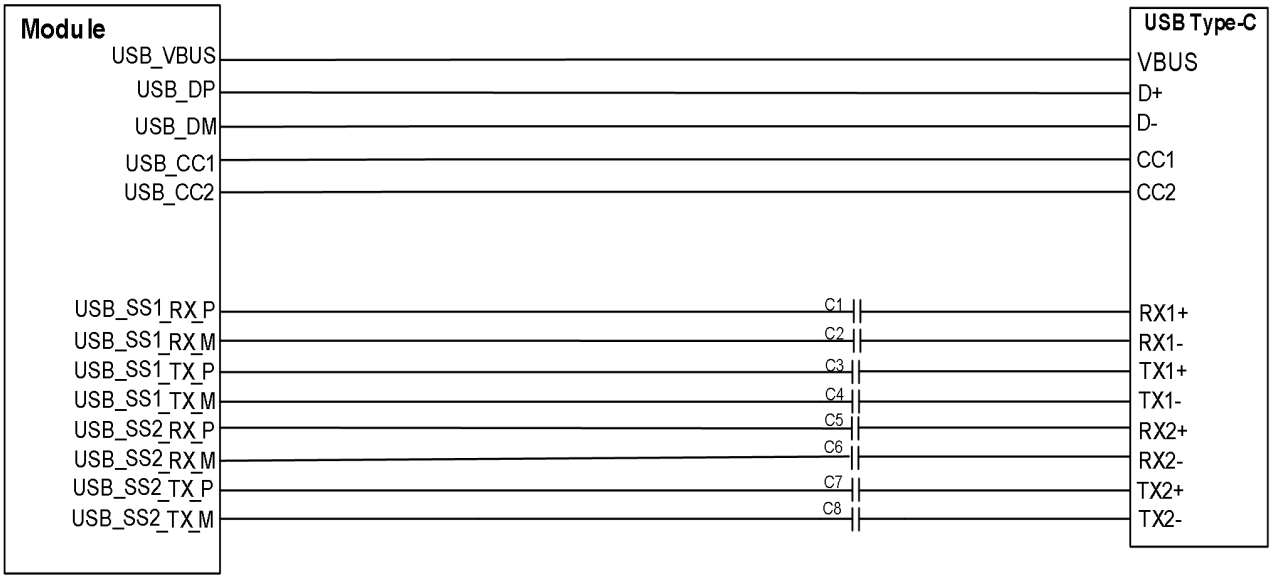

Figure 12: USB Interface Reference Design (OTG Supported)

In order to ensure USB performance, comply with the following principles when designing the USB interface.

- Route the USB signal traces as a differential pair with total grounding. The impedance of USB differential trace should be controlled to 90 Ω.
- Keep the ESD protection component as close as possible to the USB connector. Pay attention to the influence of junction capacitance of ESD protection component on USB data lines. Typically, the capacitance value should be less than 2 pF for USB 2.0 and less than 0.5 pF for USB 3.1.
- Do not route signal traces under crystals, oscillators, magnetic devices or RF signal traces. Route the USB differential traces in inner-layer of the PCB, and surround the traces with ground on that layer and with ground planes above and below.
- Make sure the intra-pair length difference within USB 2.0 differential pair does not exceed 2 mm, and that within USB 3.1 Rx or Tx differential pair does not exceed 0.7 mm.
- The spacing between USB signals and all other signals should be at least 4 times the trace width while the spacing between Rx and Tx should be at least 3 times the trace width.

- For USB 3.1, it is suggested to do simulation after the design is completed. If the cable is too long or there are too many vias, a redriver can be added to ensure the quality of signal transmission if necessary.

Table 13: USB Trace Length Inside the Module

Pin No.	Signal	Length (mm)	Length Difference (P - M)
13	USB_DM	24.13	0.24
14	USB_DP	24.37	
252	USB_SS1_RX_P	16.33	-0.17
270	USB_SS1_RX_M	16.50	
254	USB_SS1_TX_P	10.07	-0.07
253	USB_SS1_TX_M	10.14	
152	USB_SS2_RX_P	17.74	-0.28
192	USB_SS2_RX_M	18.02	
150	USB_SS2_TX_P	20.84	0.3
151	USB_SS2_TX_M	20.54	

3.10. UART Interfaces

The module provides three UART interfaces:

- UART0: four-wire UART interface, supports RTS and CTS hardware flow control
- UART4 (debug UART): two-wire UART interface, dedicated for debugging
- UART1: two-wire UART interface

Table 14: Pin Definition of UART Interfaces

Pin Name	Pin No.	I/O	Description	Comment
UART0_TXD	34	DO	UART0 transmit	1.8 V power domain. If unused, keep it open.
UART0_RXD	35	DI	UART0 receive	

UART0_RTS	37	DO	DCE request to send signal to DTE
UART0_CTS	36	DI	DCE clear to send signal from DTE
DBG_TXD	94	DO	Debug UART transmit
DBG_RXD	93	DI	Debug UART receive
UART1_TXD	154	DO	UART1 transmit
UART1_RXD	153	DI	UART1 receive

UART0 is a four-wire UART interface with 1.8 V power domain. You should use a voltage-level translator if your application is equipped with a 3.3 V UART interface. The following figure shows a reference design.

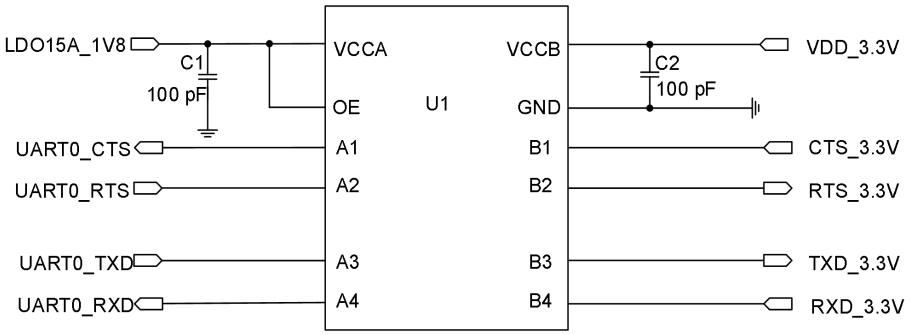

Figure 13: Reference Circuit with Voltage-level Translator Chip for UART0

The following figure presents an example of connection between the module and a PC. It is recommended to add a voltage-level translator and an RS-232 level translator chip between the module and the PC.

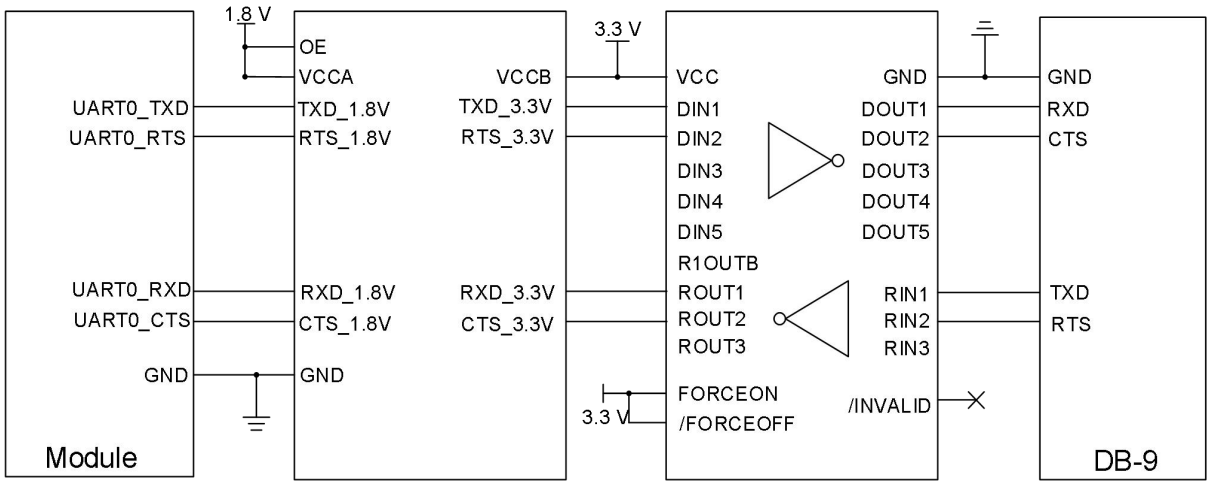

Figure 14: RS-232 Level Match Circuit for UART0

NOTE

UART4 (debug UART) and UART1 are similar to UART0. Please refer to the reference design of UART0 for the designs of the two UARTs.

3.11. (U)SIM Interfaces

The module provides two (U)SIM interfaces that meet ETSI and IMT-2000 requirements. Dual SIM Dual Standby is supported by default. Either 1.8 V or 2.95 V (U)SIM card is supported, and the (U)SIM card is powered by the internal power supply of the module.

Table 15: Pin Definition of (U)SIM Interfaces

Pin Name	Pin No.	I/O	Description	Comment
USIM1_VDD	26	PO	(U)SIM1 card power supply	Either 1.8 V or 2.95 V (U)SIM card is supported and can be identified automatically by the module.
USIM1_DATA	25	DIO	(U)SIM1 card data	Externally pulled up to USIM1_VDD with a 10 K resistor.
USIM1_CLK	24	DO	(U)SIM1 card clock	
USIM1_RST	23	DO	(U)SIM1 card reset	
USIM1_DET	22	DI	(U)SIM1 card hot-plug detect	Active low. Externally pulled up to 1.8 V. If unused, keep it open.
USIM2_VDD	21	PO	(U)SIM2 card power supply	Either 1.8 V or 2.95 V (U)SIM card is supported and can be identified automatically by the module.
USIM2_DATA	20	DIO	(U)SIM2 card data	Externally pulled up to USIM2_VDD with a 10 K resistor.
USIM2_CLK	19	DO	(U)SIM2 card clock	
USIM2_RST	18	DO	(U)SIM2 card reset	
USIM2_DET	17	DI	(U)SIM2 card hot-plug detect	Active low. Externally pulled up to 1.8 V. If unused, keep it

open.

The module supports (U)SIM card hot-plug via the USIM_DET pins. This function is disabled by default via software. To enable it, contact Quectel Technical Support to change the software configuration.

A reference circuit for (U)SIM interface with an 8-pin (U)SIM card connector is shown below.

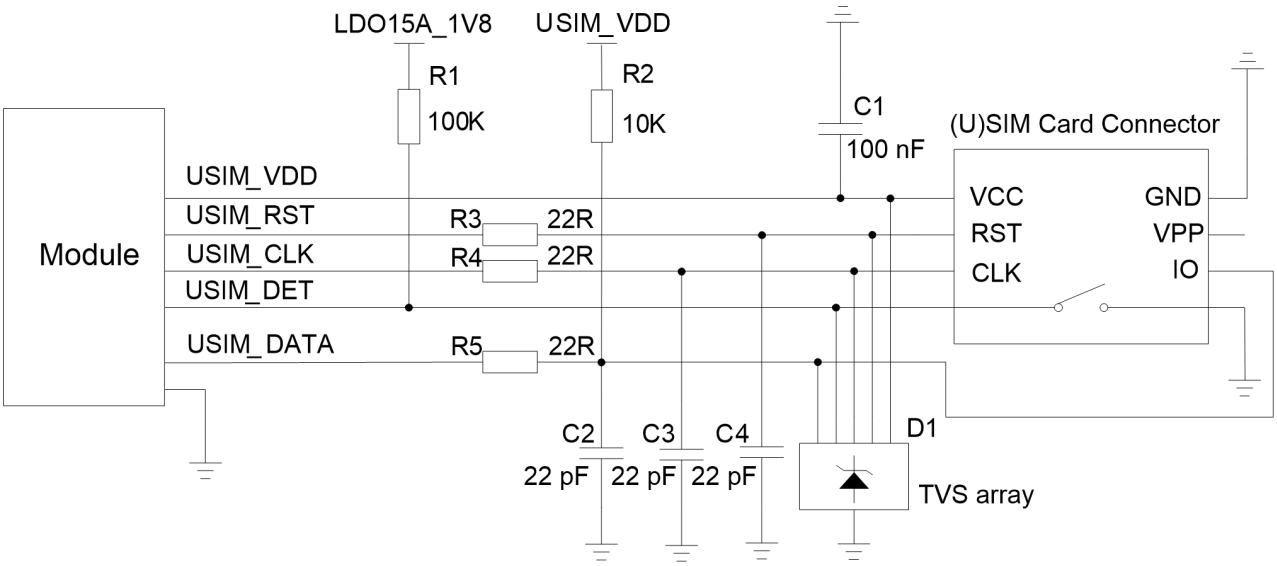

Figure 15: Reference Circuit for (U)SIM Interface with an 8-pin (U)SIM Card Connector

If you do not need hot-plug detection, keep USIM1_DET and USIM2_DET pins open. The following is a reference circuit for (U)SIM interface with a 6-pin (U)SIM card connector when hot-plug detection is not needed.

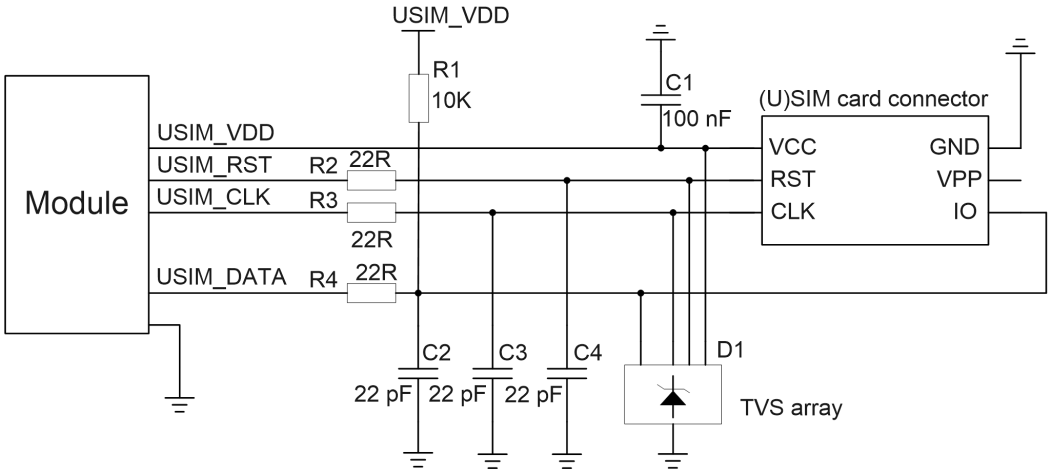

Figure 16: Reference Circuit for (U)SIM Interface with a 6-pin (U)SIM Card Connector

To enhance the reliability and availability of the (U)SIM card in applications, please follow the criteria below in (U)SIM circuit design:

- Place the (U)SIM card connector as close to the module as possible. Keep the trace length as short as possible, at most 200 mm.
- Keep (U)SIM card signals away from RF and VBAT traces.
- Reserve a filter capacitor for USIM_VDD, and its maximum capacitance should not exceed 1 μF. Additionally, place the capacitor near the (U)SIM card connector.
- To avoid cross-talk between USIM_DATA and USIM_CLK, keep them away from each other and shield them with ground. USIM_RST also needs ground protection.
- To ensure better ESD protection, it is recommended to add a TVS array with a parasitic capacitance not exceeding 10 pF. Add 22 Ω resistors in series between the module and (U)SIM card to suppress EMI such as spurious transmission and improve ESD protection. Please note that the (U)SIM peripheral circuit should be close to the (U)SIM card connector.
- Add 22 pF capacitors in parallel on USIM_DATA, USIM_CLK and USIM_RST signal traces to filter RF interference, and place them as close to the (U)SIM card connector as possible.

3.12. SD Card Interface

SD card interface of the module supports SD 3.0 protocol. The pin definition of SD card interface is shown below.

Table 16: Pin Definition of SD Card Interface

Pin Name	Pin No.	I/O	Description	Comment
SD_CLK	39	DO	SD card clock	50 Ω characteristic impedance.
SD_CMD	40	DIO	SD card command	
SD_DATA0	41	DIO	SDIO data bit 0	
SD_DATA1	42	DIO	SDIO data bit 1	
SD_DATA2	43	DIO	SDIO data bit 2	
SD_DATA3	44	DIO	SDIO data bit 3	
SD_DET	45	DI	SD card hot-plug detect	Active low.
SD_LDO21	38	PO	SD card power supply	-
SD_LDO4	32	PO	1.8/2.95 V output power for SD card pull-up circuits	-

A reference circuit for the SD card interface is shown below.

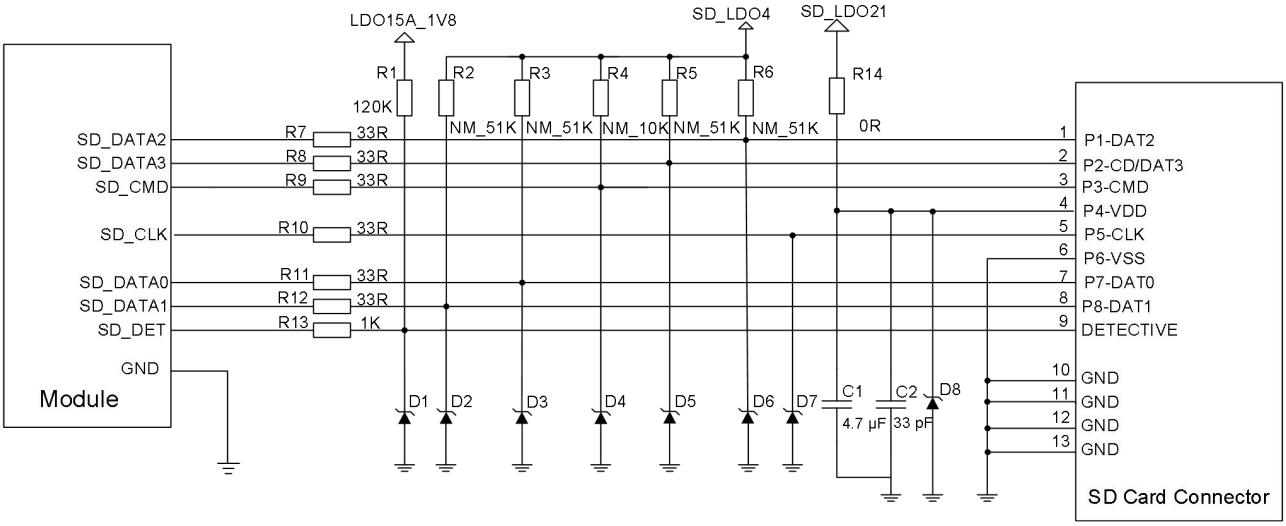

Figure 17: Reference Circuit for the SD Card Interface

SD_LDO21 is the power supply for the SD card and can provide up to 841 mA output current. Due to the high output current, it is recommended that the trace width should be at least 0.8 mm. To ensure output current stability, add a 4.7 μF and a 33 pF capacitor in parallel near the SD card connector.

SD_CMD, SD_CLK, SD_DATA0, SD_DATA1, SD_DATA2, and SD_DATA3 are all high-speed signal lines. In PCB design, control the characteristic impedance of them to 50 Ω, and do not cross them with other traces. It is recommended to route the traces on the inner layer of the PCB and keep them of the same length. Additionally, SD_CLK needs ground shielding separately.

Trace length requirements:

- Control the impedance to 50 Ω ±10 % and add ground shielding.
- Keep the trace length difference among SD_CLK, SD_CMD and SD_DATA less than 2 mm.

Table 17: SD Card Trace Length Inside the Module

Pin No.	Signal	Length (mm)
39	SD_CLK	35.01
40	SD_CMD	35.12
41	SD_DATA0	34.98
42	SD_DATA1	35.04

43	SD_DATA2	34.98
44	SD_DATA3	35.10

3.13. GPIO Interfaces

The module has abundant GPIO interfaces with a power domain of 1.8 V. The pin definition is listed below.

Table 18: Pin Definition of GPIO Interfaces

Pin Name	Pin No.	I/O	Description	Comment
GPIO_28	33	DIO	General-purpose input/output	
GPIO_31	97	DIO	General-purpose input/output	
GPIO_32	99	DIO	General-purpose input/output	
GPIO_33	108	DIO	General-purpose input/output	
GPIO_34	109	DIO	General-purpose input/output	
GPIO_35	107	DIO	General-purpose input/output	
GPIO_36	110	DIO	General-purpose input/output	
GPIO_55	100	DIO	General-purpose input/output	
GPIO_56	106	DIO	General-purpose input/output	
GPIO_57	112	DIO	General-purpose input/output	Cannot be pulled up when the module is turning on.
GPIO_58	113	DIO	General-purpose input/output	
GPIO_60	123	DIO	General-purpose input/output	
GPIO_86	182	DIO	General-purpose input/output	
GPIO_112	177	DIO	General-purpose input/output	
GPIO_111	267	DIO	General-purpose input/output	
GPIO_98	265	DIO	General-purpose input/output	
GPIO_99	105	DIO	General-purpose input/output	
GPIO_100	264	DIO	General-purpose input/output	

GPIO_101	239	DIO	General-purpose input/output
GPIO_102	104	DIO	General-purpose input/output
GPIO_103	103	DIO	General-purpose input/output
GPIO_104	101	DIO	General-purpose input/output
GPIO_105	102	DIO	General-purpose input/output
GPIO_106	90	DIO	General-purpose input/output
GPIO_107	98	DIO	General-purpose input/output
GPIO_14	118	DIO	General-purpose input/output
GPIO_15	119	DIO	General-purpose input/output
GPIO_16	116	DIO	General-purpose input/output
GPIO_17	117	DIO	General-purpose input/output
PMU_GPIO03	124	DIO	General-purpose input/output
PMU_GPIO04	115	DIO	General-purpose input/output
PMU_GPIO08	127	DIO	General-purpose input/output
PMU_GPIO07	201	DIO	General-purpose input/output

NOTE

For more details about GPIO configuration, see ***document [2]***.

3.14. I2C Interfaces

The module provides four I2C interfaces. All I2C interfaces are open drain signals and therefore you must pull them up externally. The reference power domain is 1.8 V. The sensor I2C interface only supports sensors of ADSP architecture. CAM0 I2C and CAM1 I2C signals are controlled by the Kernel code and support connection to radio-output-related devices.

Table 19: Pin Definition of I2C Interfaces

Pin Name	Pin No.	I/O	Description	Comment
TP_I2C_SCL	47	OD	TP I2C clock	Need to be pulled up to 1.8 V externally. Can be used for other I2C devices.
TP_I2C_SDA	48	OD	TP I2C data	
CAM0_I2C_SCL	83	OD	I2C clock of camera 0	Can only be used for camera.
CAM0_I2C_SDA	84	OD	I2C data of camera 0	
CAM1_I2C_SCL	166	OD	I2C clock of camera 1	
CAM1_I2C_SDA	205	OD	I2C data of camera 1	
SENSOR_I2C_SCL	91	OD	I2C clock for external sensor	Can only be used for sensors.
SENSOR_I2C_SDA	92	OD	I2C data for external sensor	

3.15. ADC Interface

The module supports one Analog-to-Digital Converter (ADC) interface. The ADC interface supports resolution of up to 15 bits. The pin definition is shown below.

Table 20: Pin Definition of ADC Interface

Pin Name	Pin No.	I/O	Description	Comment
ADC	128	AI	General-purpose ADC interface	The maximum input voltage is 1.875 V.

3.16. Vibration Motor Drive Interface

The pin definition of the vibration motor drive interface is listed below.

Table 21: Pin Definition of Vibration Motor Drive Interface

Pin Name	Pin No.	I/O	Description	Comment
VIB_DRV_P	28	PO	Vibration motor driver output control	Connect it to the positive pole of the motor.

The motor is driven by an exclusive circuit, and a reference circuit is shown below.

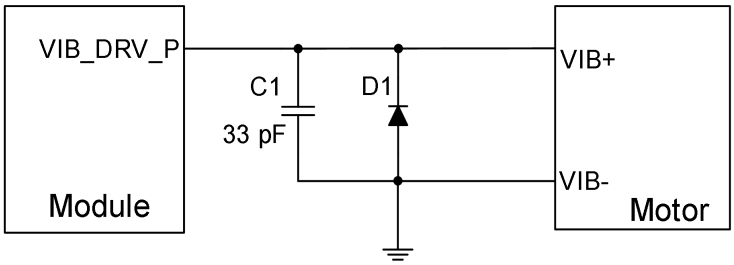

Figure 18: Reference Circuit for Motor Connection

When the motor stops working and the VIB_DRV_P is disconnected, the redundant electricity on the motor can be discharged from the circuit loop formed by diodes, thus avoiding damage to components.

3.17. LCM Interface

The module provides one LCM interface, which is MIPI DSI standard compliant. The interface supports high-speed differential data transmission and supports HD+ display (1680 × 720 @ 60 fps). The pin definition of the LCM interface is shown below.

Table 22: Pin Definition of LCM Interface

Pin Name	Pin No.	I/O	Description	Comment
LCD_RST	49	DO	LCD reset	1.8 V power domain.
LCD_TE	50	DI	LCD tearing effect	

DSI_CLK_N	52	AO	LCD MIPI clock (-)	-
DSI_CLK_P	53	AO	LCD MIPI clock (+)	-
DSI_LN0_N	54	AO	LCD MIPI lane 0 data (-)	-
DSI_LN0_P	55	AO	LCD MIPI lane 0 data (+)	-
DSI_LN1_N	56	AO	LCD MIPI lane 1 data (-)	-
DSI_LN1_P	57	AO	LCD MIPI lane 1 data (+)	-
DSI_LN2_N	58	AO	LCD MIPI lane 2 data (-)	-
DSI_LN2_P	59	AO	LCD MIPI lane 2 data (+)	-
DSI_LN3_N	60	AO	LCD MIPI lane 3 data (-)	-
DSI_LN3_P	61	AO	LCD MIPI lane 3 data (+)	-
PWM	29	DO	PWM output	1.8 V power domain.

A reference circuit for the LCM interface is shown below.

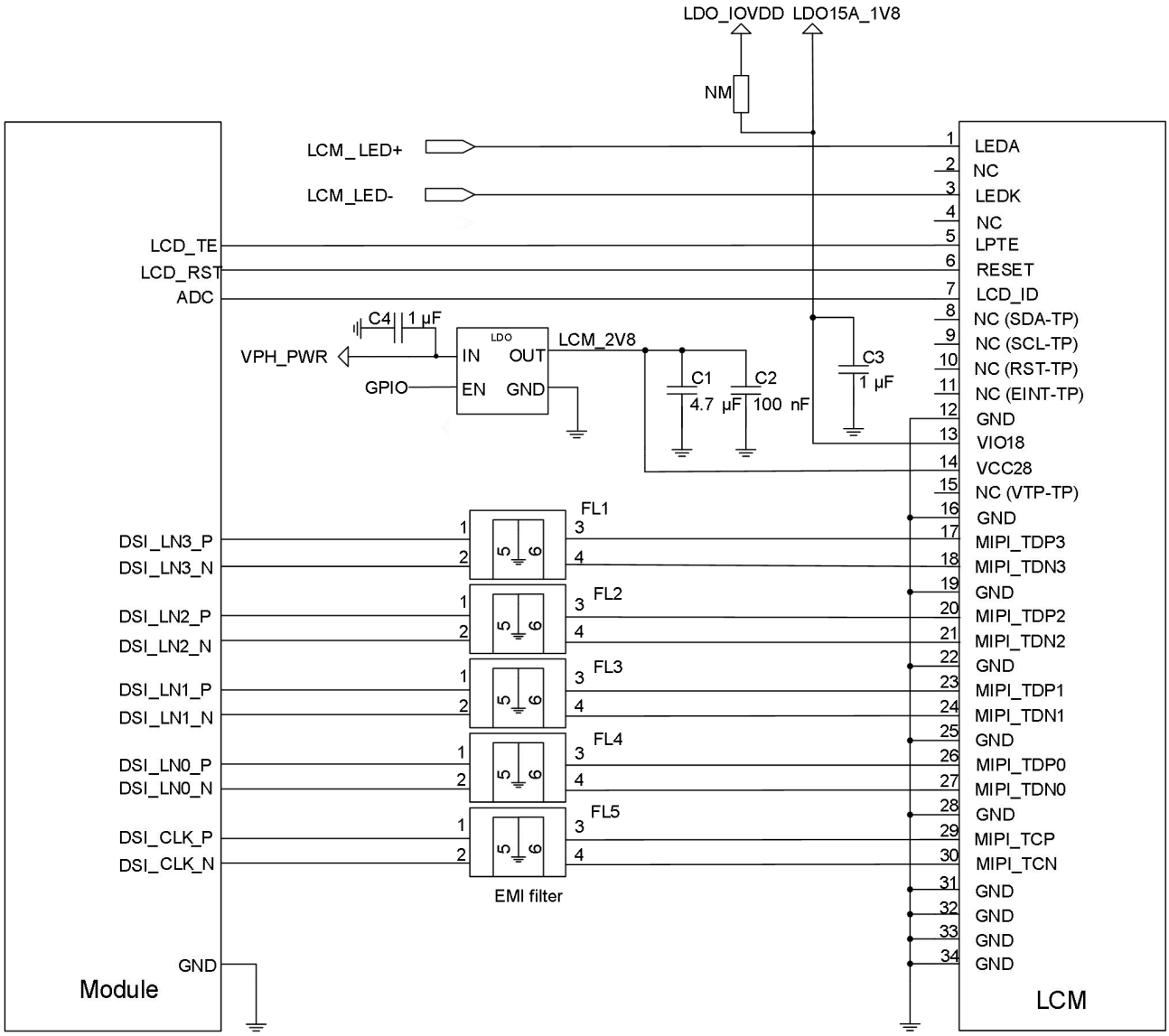

Figure 19: Reference Circuit Design for LCM Interface

MIPI are high-speed signal lines. It is recommended to add common-mode filters in series near the LCM connector, to improve protection against electromagnetic radiation interference.

It is recommended to read the LCM ID register through MIPI when compatible design with other displays is required. If several LCMs share the same IC, it is recommended that the LCM factory should burn an OTP register to distinguish different screens. You can also connect the LCD_ID pin of LCM to the ADC pin of the module, but you need to make sure that the output voltage of LCD_ID should not exceed the voltage range of the ADC pin.

You can design the external backlight driving circuit for LCM according to actual requirements. A reference circuit design is shown in the following figure, in which the PWM pin is used to adjust the backlight brightness.

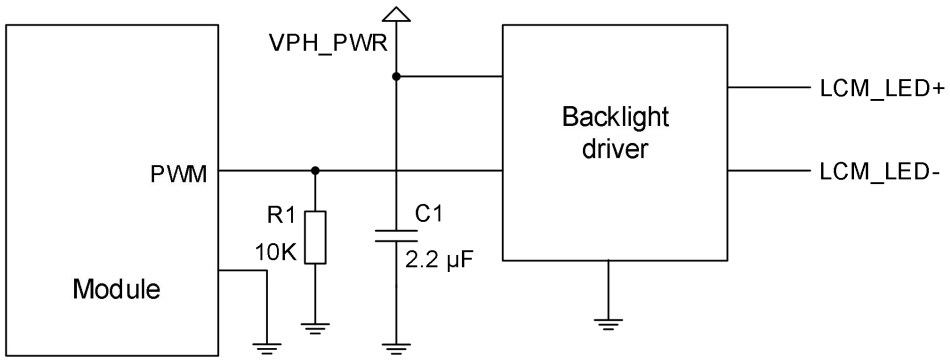

Figure 20: Reference Design for LCM External Backlight Driving Circuit

3.18. Flash Interface

The module supports one flash LED driver, with maximum output current up to 1 A.

Table 23: Pin Definition of Flash Interface

Pin Name	Pin No.	I/O	Description	Comment
FLASH_LED	180	AO	Flash/torch driver output	Supports flash and torch modes.

NOTE

Flash current is programmable in step 12.5 mA (max. 1 A) or 5 mA (max. 640 mA).

3.19. Touch Panel Interface

The module provides one I2C interface for the connection to a Touch Panel (TP), and also provides the corresponding power supply and interrupt pins. The pin definition of TP interface is illustrated below.

Table 24: Pin Definition of Touch Panel Interface

Pin Name	Pin No.	I/O	Description	Comment
TP_RST	31	DO	TP reset	1.8 V voltage domain. Active low.
TP_INT	30	DI	TP interrupt	1.8 V voltage domain.
TP_I2C_SCL	47	OD	TP I2C clock	Need to be pulled up to 1.8 V externally. Can be used for other I2C devices.
TP_I2C_SDA	48	OD	TP I2C data	

A reference circuit for the TP interface is shown below.

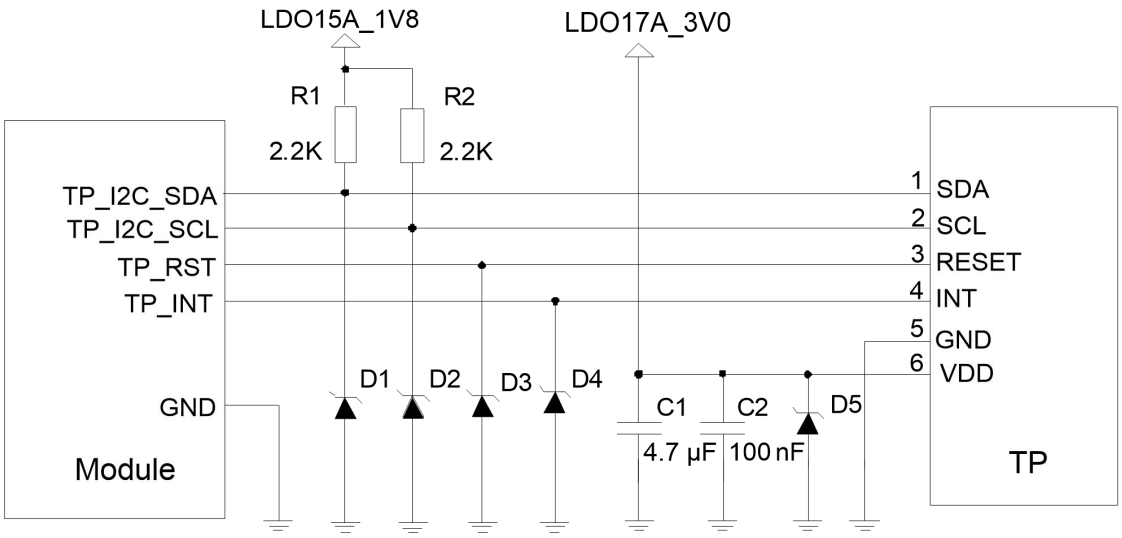

Figure 21: Reference Circuit Design for the Touch Panel Interface

3.20. Camera Interfaces

Based on MIPI CSI standard, the module supports two cameras (4-lane + 4-lane) or three cameras (4-lane + 2-lane + 1-lane), and the maximum pixel of the camera can be up to 25 MP. The video and photo quality are determined by various factors such as the camera sensor and camera lens specifications.

Table 25: Pin Definition of Camera Interfaces

Pin Name	Pin No.	I/O	Description	Comment
CSI1_CLK_N	63	AI	MIPI CSI1 clock (-)	-

CSI1_CLK_P	64	AI	MIPI CSI1 clock (+)	-
CSI1_LN0_N	65	AI	MIPI CSI1 lane 0 data (-)	-
CSI1_LN0_P	66	AI	MIPI CSI1 lane 0 data (+)	-
CSI1_LN1_N	67	AI	MIPI CSI1 lane 1 data (-)	-
CSI1_LN1_P	68	AI	MIPI CSI1 lane 1 data (+)	-
CSI1_LN2_N	72	AI	MIPI CSI1 lane 2 data (-)	-
CSI1_LN2_P	73	AI	MIPI CSI1 lane 2 data (+)	-
CSI1_LN3_N	70	AI	MIPI CSI1 lane 3 data (-)	-
CSI1_LN3_P	71	AI	MIPI CSI1 lane 3 data (+)	-
CSI0_CLK_N	157	AI	MIPI CSI0 clock (-)	-
CSI0_CLK_P	196	AI	MIPI CSI0 clock (+)	-
CSI0_LN0_N	158	AI	MIPI CSI0 lane 0 data (-)	-
CSI0_LN0_P	197	AI	MIPI CSI0 lane 0 data (+)	-
CSI0_LN1_N	159	AI	MIPI CSI0 lane 1 data (-)	-
CSI0_LN1_P	198	AI	MIPI CSI0 lane 1 data (+)	-
CSI0_LN2_N	160	AI	MIPI CSI0 lane 2 data (-)	-
CSI0_LN2_P	199	AI	MIPI CSI0 lane 2 data (+)	-
CSI0_LN3_N	161	AI	MIPI CSI0 lane 3 data (-)	-
CSI0_LN3_P	200	AI	MIPI CSI0 lane 3 data (+)	-
CAM0_I2C_SCL	83	OD	I2C clock of camera 0	Need to be pulled up to 1.8 V externally. Can only be used for camera.
CAM0_I2C_SDA	84	OD	I2C data of camera 0	
CAM0_PWDN	80	DO	Power down of camera 0	1.8 V power domain.
CAM1_PWDN	82	DO	Power down of camera 1	
CAM2_PWDN	163	DO	Power down of camera 2	
CAM0_MCLK	74	DO	Master clock of camera 0	

CAM1_MCLK	75	DO	Master clock of camera 1	
CAM2_MCLK	165	DO	Master clock of camera 2	
CAM0_RST	79	DO	Reset of camera 0	
CAM1_RST	81	DO	Reset of camera 1	
CAM2_RST	164	DO	Reset of camera 2	
CAM1_I2C_SCL	166	OD	I2C clock of camera 1	Need to be pulled up to 1.8 V externally. Can only be used for camera.
CAM1_I2C_SDA	205	OD	I2C data of camera 1	

The following is a reference circuit design for 3-camera applications.

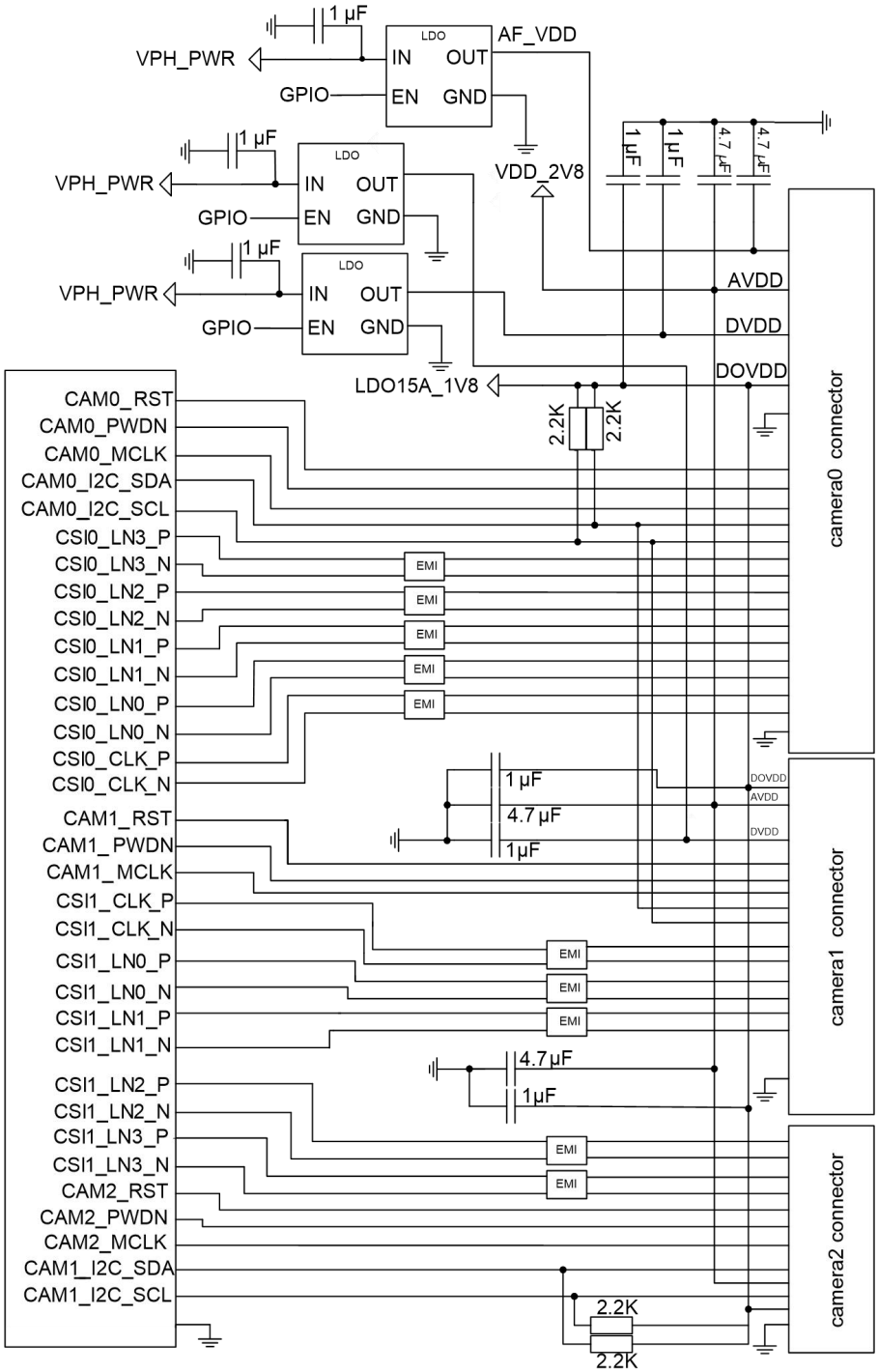

Figure 22: Reference Circuit Design for 3-Camera Applications

NOTE

In 3-camera applications, CSI1_LN3_P and CSI1_LN3_N are used as MIPI clock signals of camera 2. CSI1_LN2_P and CSI1_LN2_N are used as MIPI data signals of camera 2.

3.20.1. MIPI Design Considerations

- Special attention should be paid to the pin definition of LCM and camera connectors. Make sure the module and the connectors are correctly connected.
- MIPI lines are high-speed signal lines for DSI-supported maximum data rate of up to 1.5 Gbps and CSI-supported maximum data rate of up to 2.5 Gbps. The differential impedance should be controlled to 100 Ω. Additionally, it is recommended to route the trace on the inner layer of PCB, and do not cross it with other traces. For the same group of DSI or CSI signals, keep all the MIPI traces of the same length. In order to avoid crosstalk, keep a distance of 1.5 times the trace width among MIPI signal lines. During impedance matching, do not connect GND on different planes to ensure impedance consistency.
- It is recommended to select a low-capacitance TVS for ESD protection and the recommended parasitic capacitance should be below 1 pF.
- Route MIPI traces according to the following rules:
  a) The total trace length should not exceed 240 mm;
  b) Control the differential impedance to 100 Ω ± 10 %;
  c) Control intra-lane length difference within 0.7 mm;
  d) Control inter-lane length difference within 1.4 mm.

Table 26: MIPI Trace Length Inside the Module

Pin Name	Pin No.	Length (mm)	Length Difference (P - N)
DSI_CLK_N	52	38.53	-0.23
DSI_CLK_P	53	38.30	
DSI_LN0_N	54	38.59	-0.16
DSI_LN0_P	55	38.43	
DSI_LN1_N	56	38.22	0.25
DSI_LN1_P	57	38.47	
DSI_LN2_N	58	38.84	-0.28
DSI_LN2_P	59	38.56	
DSI_LN3_N	60	38.74	-0.26

DSI_LN3_P	61	38.48	
CSI1_CLK_N	63	18.87	-0.03
CSI1_CLK_P	64	18.84	
CSI1_LN0_N	65	19.42	-0.24
CSI1_LN0_P	66	19.18	
CSI1_LN1_N	67	19.02	0.26
CSI1_LN1_P	68	19.28	
CSI1_LN2_N	72	19.53	-0.3
CSI1_LN2_P	73	19.23	
CSI1_LN3_N	70	18.93	-0.11
CSI1_LN3_P	71	18.82	
CSI0_CLK_N	157	20.94	-0.21
CSI0_CLK_P	196	20.73	
CSI0_LN0_N	158	18.74	-0.34
CSI0_LN0_P	197	18.40	
CSI0_LN1_N	159	17.18	0.19
CSI0_LN1_P	198	17.37	
CSI0_LN2_N	160	8.28	-0.13
CSI0_LN2_P	199	8.15	
CSI0_LN3_N	161	4.97	-0.27
CSI0_LN3_P	200	4.70	

3.21. Sensor Interface

The module supports communication with sensors via I2C interfaces, and it supports ALS/PS, BDS, accelerometer, gyroscope, etc.

Table 27: Pin Definition of Sensor Interface

Pin Name	Pin No.	I/O	Description	Comment
SENSOR_I2C_SCL	91	OD	I2C clock for external sensor	Need to be pulled up to 1.8 V externally. Can only be used to connect sensor devices.
SENSOR_I2C_SDA	92	OD	I2C data for external sensor	

3.22. Audio Interfaces

The module provides three analog input channels and three analog output channels. The following table shows the pin definition.

Table 28: Pin Definition of Audio Interfaces

Pin Name	Pin No.	I/O	Description	Comment
MIC_BIAS1	147	PO	Bias voltage 1 output for microphone	The rated output current is 3 mA.
MIC1_P	4	AI	Microphone input for channel 1 (+)	-
MIC1_M	5	AI	Microphone input for channel 1 (-)	-
MIC2_P	6	AI	Microphone input for headset (+)	-
MIC3_P	148	AI	Microphone input for channel 3 (+)	-
MIC3_M	149	AI	Microphone input for channel 3 (-)	-
MIC_BIAS3	155	PO	Bias voltage 3 output for microphone	The rated output current is 3 mA. The output voltage is fixed to 1.8 V and cannot be adjusted.
EAR_P	8	AO	Earpiece output (+)	-
EAR_M	9	AO	Earpiece output (-)	-

LINEOUT_P	10	AO	Audio line differential output (+)	The typical output voltage is 2 Vrms.
LINEOUT_M	11	AO	Audio line differential output (-)	-
HPH_R	136	AO	Headphone right channel output	-
HPH_GND	137	AO	Headphone reference ground	-
HPH_L	138	AO	Headphone left channel output	-
HS_DET	139	AI	Headset hot-plug detect	High level by default.

- The module offers three audio input channels.
- The output voltage range of MIC_BIAS1 is programmable between 1.6 V and 2.85 V, and the maximum output current is 3 mA. MIC_BIAS3 supports 1.8 V pull-up output only and is not programmable.
- The earpiece interface uses differential output.
- The lineout interface uses differential output, lineout is used as audio PA input.
- The headphone interface features stereo left and right channel output, and supports headphone insertion detection.

3.22.1. Reference Circuit Design for Microphone Interfaces

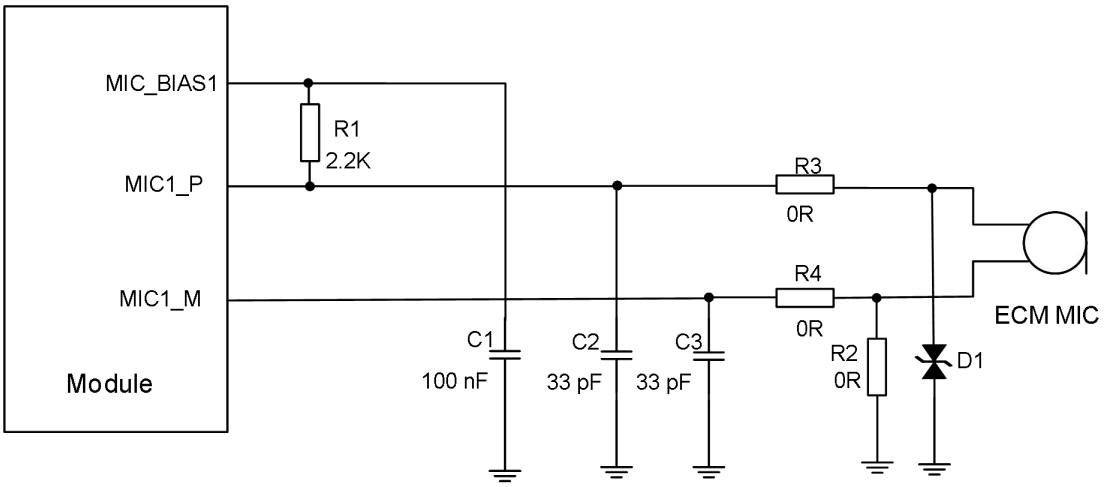

Figure 23: Reference Circuit Design for ECM Microphone Interface

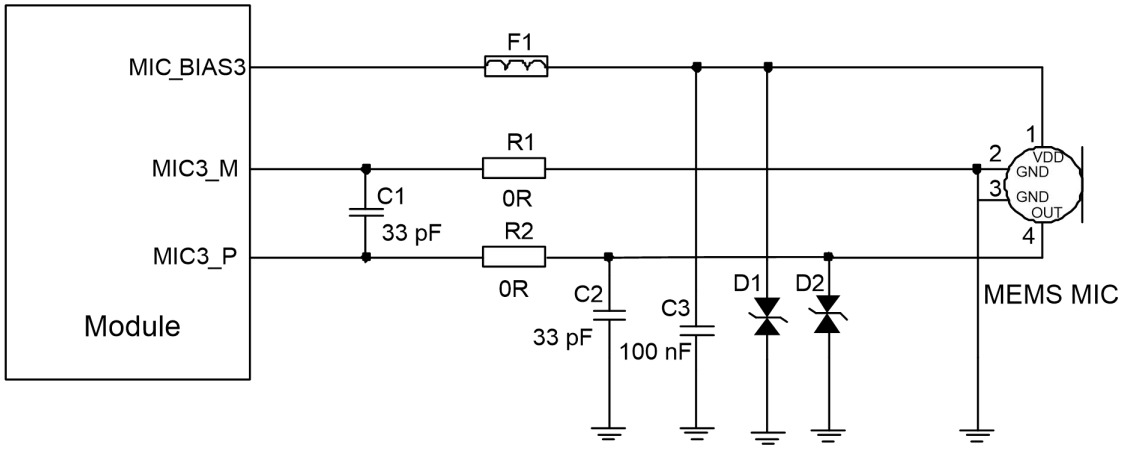

Figure 24: Reference Circuit Design for MEMS Microphone Interface

3.22.2. Reference Circuit Design for Earpiece Interface

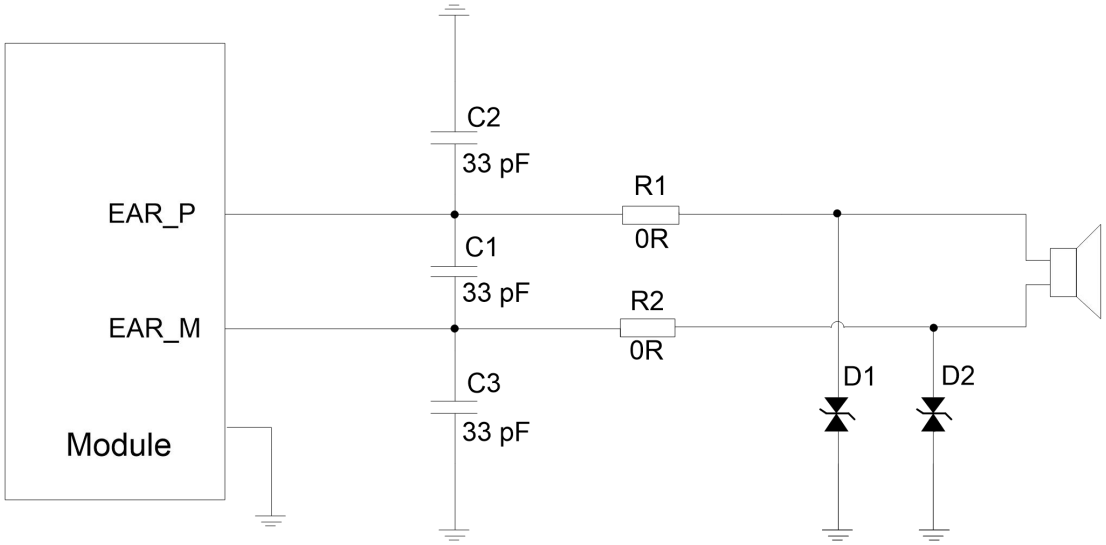

Figure 25: Reference Circuit Design for Earpiece Interface

3.22.3. Reference Circuit Design for Headset Interface

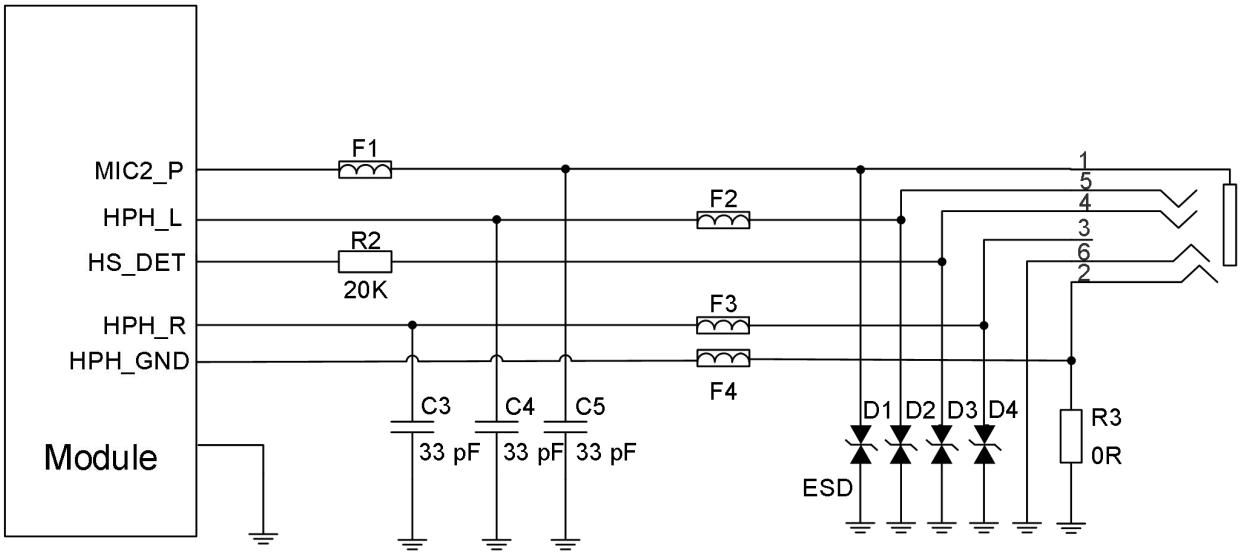

Figure 26: Reference Circuit Design for Headset Interface

3.22.4. Reference Circuit Design for Lineout Interface

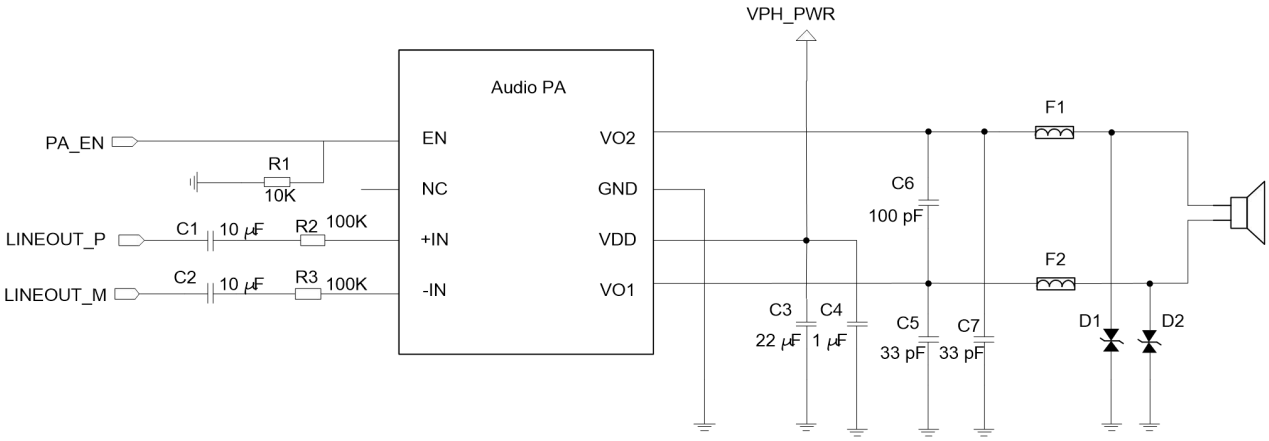

Figure 27: Reference Circuit Design for Lineout Interface

3.22.5. Audio Signal Design Considerations

It is recommended to use the ECM microphone with dual built-in capacitors (e.g., 10 pF and 33 pF) to filter out RF interference, thus reducing TDD noise. The 33 pF capacitor is applied to filter out RF interference when the module is transmitting at EGSM900. The 10 pF capacitor is used to filter out RF interference at DCS1800. Without this capacitor, TDD noise could be heard during voice calls. Please note that the resonant frequency point of a capacitor largely depends on its material and manufacturing technique. Therefore, you should consult the capacitor vendors to choose the most suitable capacitor to filter out the high-frequency noises.

The severity of RF interference in the voice channel during GSM transmitting largely depends on the application design. In some cases, EGSM900 TDD noise is more severe; while in other cases, DCS1800 TDD noise is more obvious. Therefore, you should select a suitable capacitor according to the test results. Sometimes, even no RF filtering capacitor is required.

In order to decrease radio or other signal interference, place RF antennas away from audio interfaces and audio traces. Additionally, keep power traces far away from the audio traces and do not route them in parallel.

Route the differential audio traces according to the differential signal layout rule.

3.23. USB_BOOT Control Interface

USB_BOOT is an emergency download interface. You can force the module to enter emergency download mode by pulling it up to LDO15A_1V8 when the module is turning on. This is an emergency option when failures such as abnormal start-up or running occur. For firmware upgrade and debugging in the future, reserve the following reference design.

Table 29: Pin Definition of USB_BOOT Control Interface

Pin Name	Pin No.	I/O	Description	Comment
USB_BOOT	46	DI	Force the module into emergency download mode	Force the module to enter emergency download mode by pulling this pin up to LDO15A_1V8 when the module is turning on.

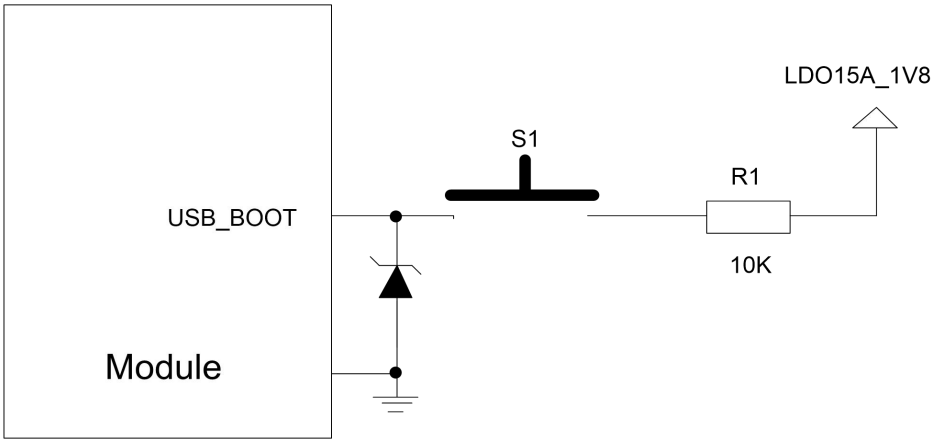

Figure 28: Reference Circuit Design for USB_BOOT Control Interface

4 Wi-Fi/Bluetooth

The module provides a shared antenna interface ANT_WIFI/BT for Wi-Fi and Bluetooth functions. The interface impedance should be controlled to 50 Ω. You can connect external antennas such as PCB antenna, sucker antenna, and ceramic antenna to the module via the interface to achieve Wi-Fi and Bluetooth functions. Bluetooth and WLAN (both 5 GHz and 2.4 GHz) are operating in TDD under coex mode.

4.1. Wi-Fi

The module supports 2.4 GHz and 5 GHz dual-band WLAN based on IEEE 802.11a/b/g/n/ac standard protocols. The maximum data rate is up to 150 Mbps in 2.4 GHz bands, and 433 Mbps in 5 GHz bands. The features are as below:

- Supports Wake-on-WLAN (WoWLAN)
- Supports ad hoc mode
- Supports WAPI SMS4 hardware encryption
- Supports AP and STA mode
- Supports Wi-Fi Direct
- Supports MCS 0–7 for HT20 and HT40
- Supports MCS 0–8 for VHT20
- Supports MCS 0–9 for VHT40 and VHT80

4.1.1. Wi-Fi Performance

The following table lists the Wi-Fi transmitting and receiving performance of the module.

Table 30: Wi-Fi Transmitting Performance

Frequency Bands	Standard	Rate	Output Power
2.4 GHz	802.11b	1 Mbps	16.5 dBm ±3 dB
	802.11b	11 Mbps	16.5 dBm ±3 dB
	802.11g	6 Mbps	16.5 dBm ±3 dB

	802.11g	54 Mbps	14.5 dBm ±3 dB
	802.11n HT20	MCS0	15 dBm ±3 dB
	802.11n HT20	MCS7	14.5 dBm ±3 dB
	802.11n HT40	MCS0	15 dBm ±3 dB
	802.11n HT40	MCS7	13.5 dBm ±3 dB
5 GHz	802.11a	6 Mbps	15.5 dBm ±3 dB
	802.11a	54 Mbps	13 dBm ±3 dB
	802.11n HT20	MCS0	15.5 dBm ±3 dB
	802.11n HT20	MCS7	13 dBm ±3 dB
	802.11n HT40	MCS0	15.5 dBm ±3 dB
	802.11n HT40	MCS7	13 dBm ±3 dB
	802.11ac VHT20	MCS0	15.5 dBm ±3 dB
	802.11ac VHT20	MCS8	12.5 dBm ±3 dB
	802.11ac VHT40	MCS0	15 dBm ±3 dB
	802.11ac VHT40	MCS9	12 dBm ±3 dB
	802.11ac VHT80	MCS0	14.5 dBm ±3 dB
	802.11ac VHT80	MCS9	11 dBm ±3 dB

Table 31: Wi-Fi Receiving Performance

Frequency Bands	Standard	Rate	Sensitivity
2.4 GHz	802.11b	1 Mbps	-96 dBm
	802.11b	11 Mbps	-87 dBm
	802.11g	6 Mbps	-90 dBm
	802.11g	54 Mbps	-74 dBm
	802.11n HT20	MCS0	-88 dBm

	802.11n HT20	MCS7	-68 dBm
	802.11n HT40	MCS0	-85 dBm
	802.11n HT40	MCS7	-66 dBm
5 GHz	802.11a	6 Mbps	-89 dBm
	802.11a	54 Mbps	-72 dBm
	802.11n HT20	MCS0	-88 dBm
	802.11n HT20	MCS7	-68 dBm
	802.11n HT40	MCS0	-85 dBm
	802.11n HT40	MCS7	-66 dBm
	802.11ac VHT20	MCS0	-89 dBm
	802.11ac VHT20	MCS8	-66 dBm
	802.11ac VHT40	MCS0	-85 dBm
	802.11ac VHT40	MCS9	-61 dBm
	802.11ac VHT80	MCS0	-82 dBm
	802.11ac VHT80	MCS9	-58 dBm

Reference specifications are listed below:

- *IEEE 802.11n WLAN MAC and PHY, October 2009 + IEEE 802.11-2007 WLAN MAC and PHY, June 2007*
- *IEEE Std 802.11a, IEEE Std 802.11b, IEEE Std 802.11g: IEEE 802.11-2007 WLAN MAC and PHY, June 2007*

4.2. Bluetooth

The module supports Bluetooth 5.0 (BR/EDR + BLE) specification, as well as GFSK, 8-DPSK, π/4-DQPSK modulation modes.

- Maximally supports up to 7 wireless connections.
- Maximally supports up to 3.5 piconets at the same time.
- Support one SCO or eSCO connection.

The BR/EDR channel bandwidth is 1 MHz, and can accommodate 79 channels. The BLE channel bandwidth is 2 MHz, and can accommodate 40 channels.

Table 32: Bluetooth Data Rate and Version

Version	Data Rate	Maximum Application Throughput
1.2	1 Mbit/s	> 80 kbit/s
2.0 + EDR	3 Mbit/s	> 80 kbit/s
3.0 + HS	24 Mbit/s	Reference 3.0 + HS
4.0	24 Mbit/s	Reference 4.0 LE
5.0	24 Mbit/s	Reference 5.0 LE

Reference specifications are listed below:

- *Bluetooth Radio Frequency TSS and TP Specification 1.2/2.0/2.0 + EDR/2.1/2.1 + EDR/3.0/3.0 + HS, August 6, 2009*
- *Bluetooth Low Energy RF PHY Test Specification, RF-PHY.TS/4.0.0, December 15, 2009*

4.2.1. Bluetooth Performance

The following table lists the Bluetooth transmitting and receiving performance of the module.

Table 33: Bluetooth Transmitting and Receiving Performance

Transmitter Performance			
Packet Types	DH5	2-DH5	3-DH5
Transmitting Power	7 dBm ±3 dB	6.5 dBm ±3 dB	6.5 dBm ±3 dB
Receiver Performance			
Packet Types	DH5	2-DH5	3-DH5
Receiving Sensitivity	-93 dBm	-90 dBm	-85 dBm

5 GNSS

The module integrates a IZat™ GNSS engine (GEN 8C) which supports multiple positioning and navigation systems including GPS, GLONASS, Galileo, BDS, QZSS, SBAS and NavIC [5]. With an embedded LNA, the positioning accuracy of the module has been significantly improved.

5.1. GNSS Performance

The following table lists the GNSS performance of the module in conduction mode.

Table 34: GNSS Performance

Parameter	Description	Typ.	Unit
Sensitivity	Acquisition	-147	dBm
	Reacquisition	-159	dBm
	Tracking	-159	dBm
TTFF	Cold start	31.2	s
	Warm start	24.7	s
	Hot start	1.32	s
Accuracy	CEP-50	2.5	m

NOTE

1. Tracking sensitivity: the minimum GNSS signal power at which the module can maintain lock (keep positioning for at least 3 minutes continuously).
2. Reacquisition sensitivity: the minimum GNSS signal power required for the module to maintain lock within 3 minutes after loss of lock.

[5] SC200E-WF and SC206E-WF do not support GNSS and NavIC is supported by SC200E-NA and SC206E-NA only.

3. Acquisition sensitivity: the minimum GNSS signal power at which the module can fix position successfully within 3 minutes after executing cold start command.

5.2. Reference Design

Bad design of antenna and layout may cause reduced GNSS receiving sensitivity, longer GNSS positioning time, or reduced positioning accuracy. In order to avoid this, follow the reference design rules as below:

- Maximize the distance between the GNSS RF part and the GPRS RF part (including trace routing and antenna layout) to avoid mutual interference.
- In user systems, place GNSS RF signal lines and RF components far away from high-speed circuits, switch-mode power supplies, power inductors, the clock circuit of single-chip microcomputers, etc.
- For applications with harsh electromagnetic environment or high ESD protection requirements, it is recommended to add ESD protective diodes for the antenna interface. The junction capacitance of the diodes should be less than 0.5 pF. Otherwise, it will influence the impedance characteristic of RF circuit loop, or cause attenuation of bypass RF signals.
- Control the impedance of feeder lines and PCB traces to 50 Ω, and keep the trace as short as possible.
- See ***Chapter 6.3*** for reference circuit designs of GNSS antenna.

6 Antenna Interfaces

SC200E-CE/-EM/-NA and SC206E-EM/-NA provide four antenna interfaces for the main, Rx-diversity, Wi-Fi/Bluetooth, and GNSS antennas respectively, while SC200E-WF and SC206E-WF provide one antenna interface for Wi-Fi/Bluetooth antenna only. The impedance of the antenna ports should be controlled to 50 Ω.

Appropriate antenna type and design should be used with matched antenna parameters according to specific application. It is required to perform a comprehensive functional test for the RF design before mass production of terminal products. The entire content of this chapter is provided for illustration only. Analysis, evaluation and determination are still necessary when designing target products.

6.1. Main Antenna and Rx-diversity Antenna Interfaces

Table 35: Pin Definition of Main/Rx-diversity Antenna Interfaces

Pin Name	Pin No.	I/O	Description	Comment
ANT_MAIN	87	AIO	Main antenna interface	50 Ω impedance
ANT_DRX	131	AI	Diversity antenna interface	

6.1.1. Operating Frequency

The operating frequencies of the modules are listed in the following tables.

Table 36: SC200E-CE Operating Frequency

3GPP Bands	Receive	Transmit	Unit
EGSM900	925–960	880–915	MHz
DCS1800	1805–1880	1710–1785	MHz
WCDMA B1	2110–2170	1920–1980	MHz

WCDMA B8	925–960	880–915	MHz
EVDO/CDMA BC0	869–894	824–849	MHz
LTE-FDD B1	2110–2170	1920–1980	MHz
LTE-FDD B3	1805–1880	1710–1785	MHz
LTE-FDD B5	869–894	824–849	MHz
LTE-FDD B8	925–960	880–915	MHz
LTE-TDD B34	2010–2025	2010–2025	MHz
LTE-TDD B38	2570–2620	2570–2620	MHz
LTE-TDD B39	1880–1920	1880–1920	MHz
LTE-TDD B40	2300–2400	2300–2400	MHz
LTE-TDD B41	2535–2675	2535–2675	MHz

Table 37: SC200E-EM&SC206E-EM Operating Frequency

3GPP Bands	Receive	Transmit	Unit
GSM850	869–894	824–849	MHz
EGSM900	925–960	880–915	MHz
DCS1800	1805–1880	1710–1785	MHz
PCS1900	1930–1990	1850–1910	MHz
WCDMA B1	2110–2170	1920–1980	MHz
WCDMA B2	1930–1990	1850–1910	MHz
WCDMA B4	2110–2155	1710–1755	MHz
WCDMA B5	869–894	824–849	MHz
WCDMA B8	925–960	880–915	MHz
LTE-FDD B1	2110–2170	1920–1980	MHz
LTE-FDD B2	1930–1990	1850–1910	MHz

LTE-FDD B3	1805–1880	1710–1785	MHz
LTE-FDD B4	2110–2155	1710–1755	MHz
LTE-FDD B5	869–894	824–849	MHz
LTE-FDD B7	2620–2690	2500–2570	MHz
LTE-FDD B8	925–960	880–915	MHz
LTE-FDD B20	791–821	832–862	MHz
LTE-FDD B28	758–803	703–748	MHz
LTE-TDD B38	2570–2620	2570–2620	MHz
LTE-TDD B40	2300–2400	2300–2400	MHz
LTE-TDD B41	2496–2690	2496–2690	MHz

Table 38: SC200E-NA&SC206E-NA Operating Frequency

3GPP Bands	Receive	Transmit	Unit
LTE-FDD B2	1930–1990	1850–1910	MHz
LTE-FDD B4	2110–2155	1710–1755	MHz
LTE-FDD B5	869–894	824–849	MHz
LTE-FDD B7	2620–2690	2500–2570	MHz
LTE-FDD B12	729–746	699–716	MHz
LTE-FDD B13	746–756	777–787	MHz
LTE-FDD B14	758–768	788–798	MHz
LTE-FDD B17	734–746	704–716	MHz
LTE-FDD B25	1930–1995	1850–1915	MHz
LTE-FDD B26	859–894	814–849	MHz
LTE-FDD B66	2110–2180	1710–1780	MHz
LTE-FDD B71	617–652	663–698	MHz

LTE-TDD B41	2496–2690	2496–2690	MHz

Table 39: SC200E-JP Operating Frequency

3GPP Bands	Receive	Transmit	Unit
WCDMA B1	2110–2170	1920–1980	MHz
WCDMA B6	875–885	830–840	MHz
WCDMA B8	925–960	880–915	MHz
WCDMA B19	875–885	830–840	MHz
LTE-FDD B1	2110–2170	1920–1980	MHz
LTE-FDD B3	1805–1880	1710–1785	MHz
LTE-FDD B5	869–894	824–849	MHz
LTE-FDD B8	925–960	880–915	MHz
LTE-FDD B11	1475.9–1495.9	1427.9–1447.9	MHz
LTE-FDD B18	860–875	815–830	MHz
LTE-FDD B19	875–890	830–845	MHz
LTE-FDD B21	1495.9–1510.9	1447.9–1462.9	MHz
LTE-FDD B26	859–894	814–849	MHz
LTE-FDD B28	758–803	703–748	MHz
LTE-TDD B41	2496–2690	2496–2690	MHz

6.1.2. Reference Design

A reference circuit design for the main and Rx-diversity antenna interfaces is shown below. Reserve a π-type matching circuit for each antenna to achieve better RF performance, and place the π-type matching components (R1/C1/C2 and R2/C3/C4) as close to the antennas as possible. The capacitors are not mounted by default and the resistors are 0 Ω.

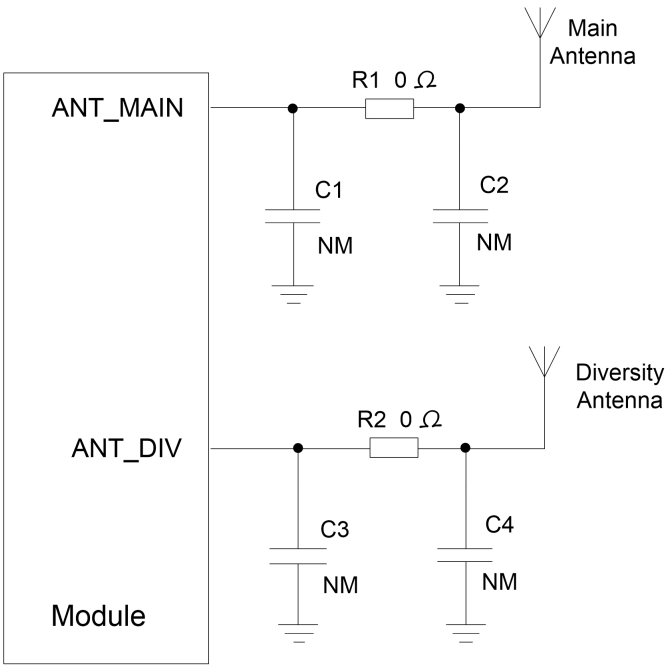

Figure 29: Reference Circuit Design for Main and Rx-diversity Antenna Interfaces

6.2. Wi-Fi/Bluetooth Antenna Interface

The following tables show the pin definition and frequency specification of the Wi-Fi/Bluetooth antenna interface.

Table 40: Pin Definition of Wi-Fi/Bluetooth Antenna Interface

Pin Name	Pin No.	I/O	Description	Comment
ANT_WIFI/BT	77	AIO	Wi-Fi/Bluetooth antenna interface	50 Ω impedance

Table 41: Wi-Fi/Bluetooth Frequency

Type	Frequency	Unit
Wi-Fi (2.4 GHz)	2412–2472	MHz
Wi-Fi (5 GHz)	5180–5825	MHz
Bluetooth 5.0	2402–2480	MHz

A reference circuit design for Wi-Fi/Bluetooth antenna interface is shown as below. C1 and C2 are not

mounted by default and the resistor is 0 Ω.

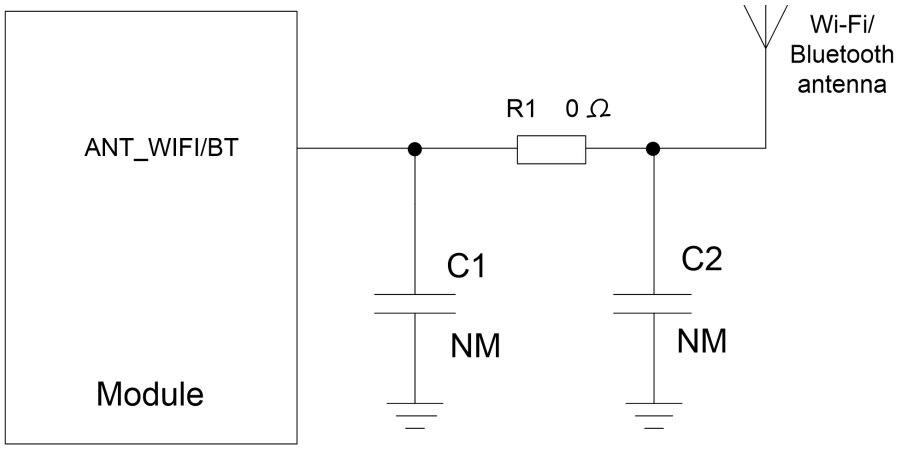

Figure 30: Reference Circuit Design for Wi-Fi/Bluetooth Antenna

6.3. GNSS Antenna Interface

The following tables show the pin definition and frequency specification of GNSS antenna interface.

Table 42: Pin Definition of GNSS Antenna Interface

Pin Name	Pin No.	I/O	Description	Comment
ANT_GNSS	121	AI	GNSS antenna interface	50 Ω impedance

Table 43: GNSS Frequency

Type	Frequency	Unit
GPS L1	1575.42 ±1.023	MHz
GPS L5	1176.45 ±10.23	MHz
GLONASS L1	1597.5–1605.8	MHz
BDS B1I	1561.098 ±2.046	MHz
Galileo E1	1575.42 ±2.046	MHz
Galileo E5a	1176.45 ±10.23	MHz
QZSS L1	1575.42 ±1.023	MHz

QZSS L5	1176.45 ±10.23	MHz
SBAS L1	1575.42 ±1.023	MHz
SBAS L5	1176.45 ±10.23	MHz
NavIC L5	1176.45 ±10.23	MHz

6.3.1. Reference Circuit Design for Passive GNSS Antenna

GNSS antenna interface supports passive ceramic antennas and other types of passive antennas. A reference circuit design is given below.

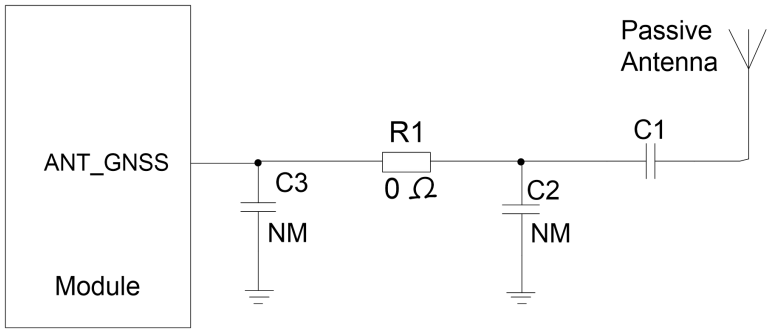

Figure 31: Reference Circuit Design for Passive GNSS Antenna

NOTE

It is not recommended to add an external LNA when using a passive GNSS antenna.

6.3.2. Reference Circuit Design for Active GNSS Antenna

In any case, it is recommended to use a passive antenna. If active antenna is indeed needed in your application, it is recommended to reserve a π-type attenuation circuit provision and use high-performance LDO as the power supply. The active antenna is powered by a 56 nH inductor through the antenna's signal path. The common power supply voltage ranges from 3.3 V to 5.0 V. Despite its low power consumption, the active antenna still requires stable and clean power supplies. Therefore, it is recommended to use high-performance LDO as the power supply.

A reference design for active GNSS antenna is shown below.

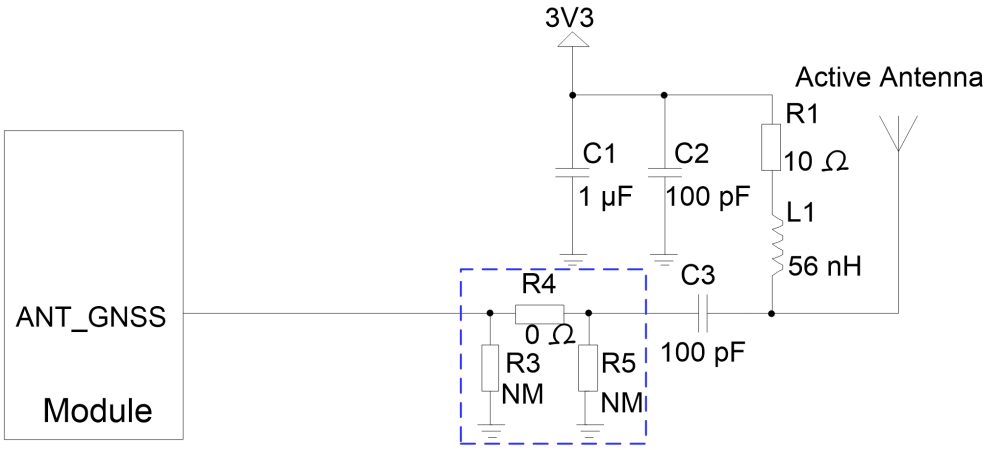

Figure 32: Reference Circuit Design for Active GNSS Antenna

NOTE

It is recommended to use a passive GNSS antenna when LTE B13 or B14 is supported, as the use of active antenna may generate harmonics which will affect the GNSS performance.

6.4. RF Routing Guidelines

For user's PCB, the characteristic impedance of all RF traces should be controlled to 50 Ω. The impedance of the RF traces is usually determined by the trace width (W), the materials' dielectric constant, the height from the reference ground to the signal layer (H), and the spacing between RF traces and grounds (S). Microstrip or coplanar waveguide is typically used in RF layout to control characteristic impedance. The following are reference designs of microstrip or coplanar waveguide with different PCB structures.

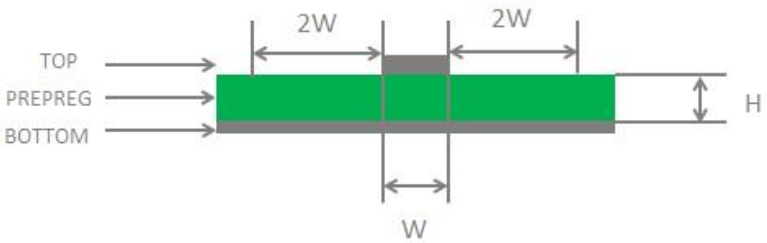

Figure 33: Microstrip Design on a 2-layer PCB

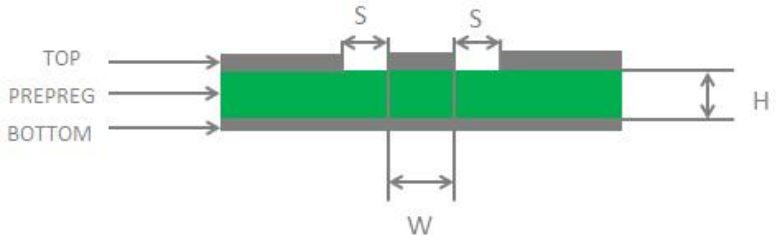

Figure 34: Coplanar Waveguide Design on a 2-layer PCB

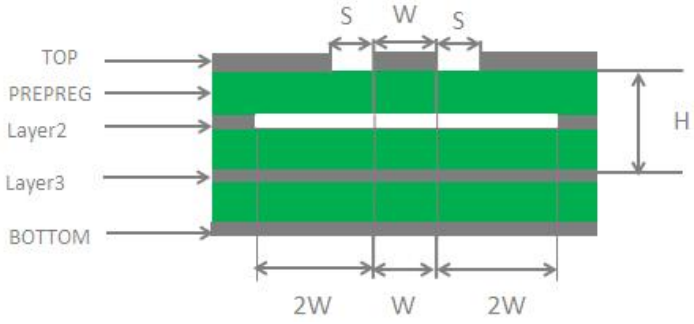

Figure 35: Coplanar Waveguide Design on a 4-layer PCB (Layer 3 as Reference Ground)

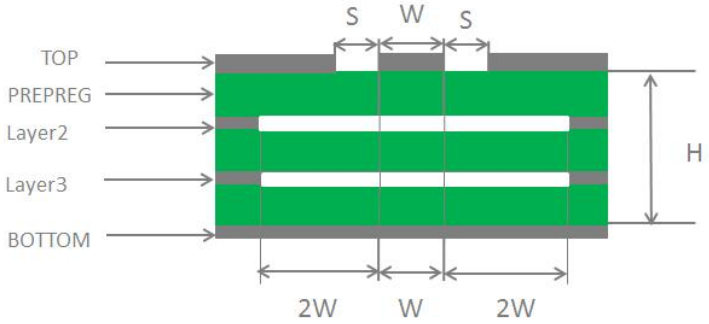

Figure 36: Coplanar Waveguide Design on a 4-layer PCB (Layer 4 as Reference Ground)

To ensure RF performance and reliability, follow the principles below in RF layout design:

- Use an impedance simulation tool to accurately control the characteristic impedance of RF traces to 50 Ω.
- The GND pins adjacent to RF pins should not be designed as thermal relief pads, and should be fully connected to ground.
- The distance between the RF pins and the RF connector should be as short as possible and all the right-angle traces should be changed to curved ones. The recommended trace angle is 135°.
- There should be clearance under the signal pin of the antenna connector or solder joint.

- The reference ground of RF traces should be complete. Meanwhile, adding some ground vias around RF traces and the reference ground could help to improve RF performance. The distance between the ground vias and RF traces should be not less than twice the width of RF signal traces (2 × W).
- Keep RF traces away from interference sources, and avoid intersection and paralleling between traces on adjacent layers.

For more details about RF layout, see ***document [3]***.

6.5. Antenna Installation

6.5.1. Antenna Design Requirements

The following table shows the requirements for the main antenna, Rx-diversity antenna, Wi-Fi/Bluetooth antenna, and GNSS antenna.

Table 44: Antenna Requirements

Type	Requirements
GSM/WCDMA/LTE	● VSWR: ≤ 2 ● Gain: 1 dBi ● Max Input Power: 50 W ● Input Impedance: 50 Ω ● Polarization Type: Vertical ● Cable insertion loss: **< 1 dB:** LB (< 1 GHz) **< 1.5 dB:** MB (1–2.3 GHz) **< 2 dB:** HB (> 2.3 GHz)
Wi-Fi/Bluetooth	● VSWR: ≤ 2 ● Gain: 1 dBi ● Max Input Power: 50 W ● Input Impedance: 50 Ω ● Polarization Type: Vertical ● Cable Insertion Loss: < 1 dB
GNSS	● Frequency range: L1: 1559–1609 MHz L5: 1166–1187 MHz (only supported on SC200E-NA & SC206E-NA) ● Polarization: RHCP or linear ● VSWR: ≤ 2 (Typ.)
	For passive antenna usage: Passive antenna gain: > 0 dBi

	For active antenna usage: Passive antenna gain: > 0 dBi Active antenna noise figure: < 1.5 dB (Typ.) Active antenna embedded LNA gain: < 17 dB (Typ.)

6.5.2. RF Connector Recommendation

If you use an RF connector for antenna connection, it is recommended to use the U.FL-R-SMT receptacle provided by Hirose.

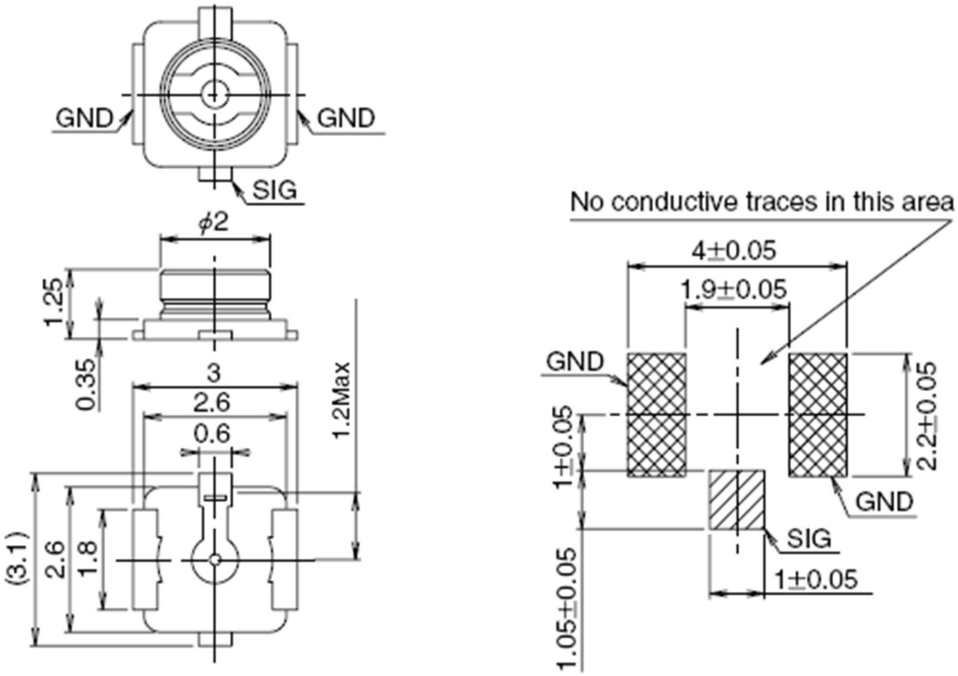

Figure 37: Dimensions of the Receptacle (Unit: mm)

U.FL-LP series mated plugs listed in the following figure can be used to match U.FL-R-SMT.

	U.FL-LP-040	U.FL-LP-066	U.FL-LP(V)-040	U.FL-LP-062	U.FL-LP-088
Part No.	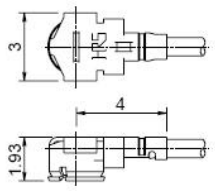	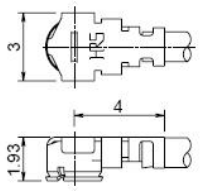	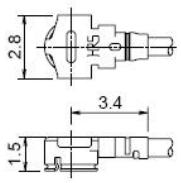	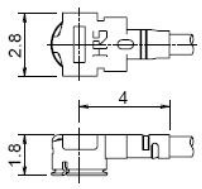	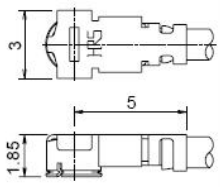
Mated Height	2.5mm Max. (2.4mm Nom.)	2.5mm Max. (2.4mm Nom.)	2.0mm Max. (1.9mm Nom.)	2.4mm Max. (2.3mm Nom.)	2.4mm Max. (2.3mm Nom.)
Applicable cable	Dia. 0.81mm Coaxial cable	Dia. 1.13mm and Dia. 1.32mm Coaxial cable	Dia. 0.81mm Coaxial cable	Dia. 1mm Coaxial cable	Dia. 1.37mm Coaxial cable
Weight (mg)	53.7	59.1	34.8	45.5	71.7
RoHS	YES				

Figure 38: Specifications of Mated Plugs

The following figure describes the space factor of mated connectors.

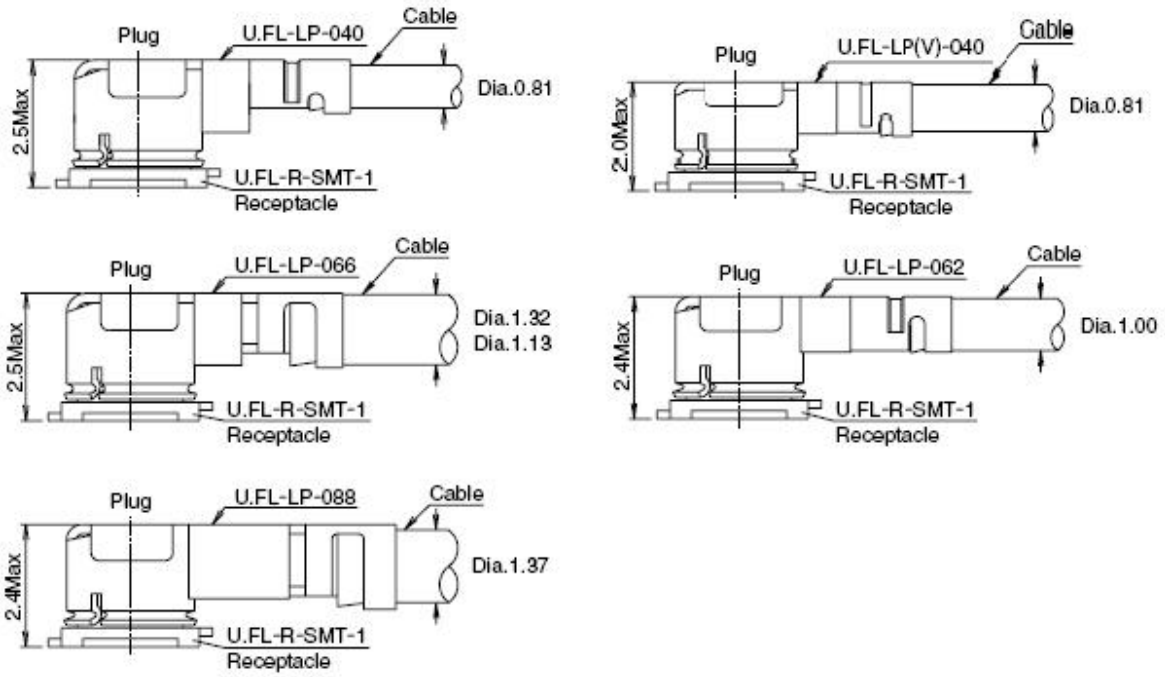

Figure 39: Space Factor of Mated Connectors (Unit: mm)

For more details, visit http://www.hirose.com.

7 Electrical Characteristics and Reliability

7.1. Absolute Maximum Ratings

Absolute maximum ratings for power supply and voltage on digital and analog pins of the module are listed in the following table.

Table 45: Absolute Maximum Ratings

Parameter	Min.	Max.	Unit
VBAT	-0.5	6	V
USB_VBUS	-0.5	16	V
Peak Current of VBAT	-	3	A
Voltage on Digital Pins	-0.3	2.16	V

7.2. Power Supply Ratings

Table 46: Power Supply Ratings

Parameter	Description	Conditions	Min.	Typ.	Max.	Unit
VBAT	VBAT	The actual input voltages must be kept between the minimum and maximum values	3.55	3.8	4.4	V
	Voltage drop during transmitting burst	Maximum power control level at EGSM900	-	-	400	mV
I_{VBAT}	Peak supply current (during transmission slot)	Maximum power control level at EGSM900	-	1.8	3.0	A

USB_VBUS	Charging power input	-	4.0	5.0	6.0	V
VRTC	Power supply voltage of the backup battery	-	2.5	3.0	3.2	V

7.3. Digital I/O Characteristics

Table 47: 1.8 V Digital I/O Requirements

Parameter	Description	Min.	Max.	Unit
V_{IH}	Input high voltage	1.17	2.1	V
V_{IL}	Input low voltage	-0.3	0.63	V
V_{OH}	Output high voltage	1.35	1.8	V
V_{OL}	Output low voltage	0	0.45	V

Table 48: (U)SIM 1.8 V I/O Requirements

Parameter	Description	Min.	Max.	Unit
USIM_VDD	Power supply	1.75	1.85	V
V_{IH}	Input high voltage	1.26	2.1	V
V_{IL}	Input low voltage	-0.3	0.36	V
V_{OH}	Output high voltage	1.44	1.8	V
V_{OL}	Output low voltage	0	0.4	V

Table 49: (U)SIM 2.95 V I/O Requirements

Parameter	Description	Min.	Max.	Unit
USIM_VDD	Power supply	2.8	3.1	V
V_{IH}	Input high voltage	2.065	3.25	V
V_{IL}	Input low voltage	-0.3	0.59	V

V_{OH}	Output high voltage	2.36	2.95	V
V_{OL}	Output low voltage	0	0.4	V

Table 50: SD Card 1.8 V I/O Requirements

Parameter	Description	Min.	Max.	Unit
V_{IH}	Input high voltage	1.27	2	V
V_{IL}	Input low voltage	-0.3	0.58	V
V_{OH}	Output high voltage	1.4	-	V
V_{OL}	Output low voltage	-	0.45	V

Table 51: SD Card 2.95 V I/O Requirements

Parameter	Description	Min.	Max.	Unit
V_{IH}	Input high voltage	1.84	3.25	V
V_{IL}	Input low voltage	-0.3	0.74	V
V_{OH}	Output high voltage	2.21	2.95	V
V_{OL}	Output low voltage	0	0.37	V

7.4. Operating and Storage Temperatures

The operating and storage temperatures are listed in the following table.

Table 52: Operating and Storage Temperatures

Parameter	Min.	Typ.	Max.	Unit
Operating temperature range [6]	-35	+25	+75	ºC
Storage Temperature Range	-40	-	+90	ºC

[6] Within operating temperature range, the module meets 3GPP specifications.

7.5. Power Consumption

The values of current consumption are shown below.

Table 53: SC200E-CE Power Consumption

Description	Conditions	Typ.	Unit
OFF state	Power off	42.0	μA
GSM/GPRS supply current	Sleep state (USB disconnected) @ DRX = 2	4.93	mA
	Sleep state (USB disconnected) @ DRX = 5	4.26	mA
	Sleep state (USB disconnected) @ DRX = 9	3.85	mA
WCDMA supply current	Sleep state (USB disconnected) @ DRX = 6	4.65	mA
	Sleep state (USB disconnected) @ DRX = 7	4.21	mA
	Sleep state (USB disconnected) @ DRX = 8	4.11	mA
	Sleep state (USB disconnected) @ DRX = 9	3.87	mA
CDMA supply current	BC0 CH283 @ Slot Cycle Index = 1	4.94	mA
	BC0 CH283 @ Slot Cycle Index = 7	3.71	mA
LTE-FDD supply current	Sleep state (USB disconnected) @ DRX = 5	6.27	mA
	Sleep state (USB disconnected) @ DRX = 6	5.00	mA
	Sleep state (USB disconnected) @ DRX = 7	4.28	mA
	Sleep state (USB disconnected) @ DRX = 8	4.17	mA
LTE-TDD supply current	Sleep state (USB disconnected) @ DRX = 5	6.30	mA
	Sleep state (USB disconnected) @ DRX = 6	5.10	mA
	Sleep state (USB disconnected) @ DRX = 7	4.43	mA
	Sleep state (USB disconnected) @ DRX = 8	3.99	mA
GSM voice call	EGSM900 @ PCL 5	287	mA

	EGSM900 @ PCL 12	143	mA
	EGSM900 @ PCL 19	87	mA
	DCS1800 @ PCL 0	190	mA
	DCS1800 @ PCL 7	137	mA
	DCS1800 @ PCL 15	85	mA
WCDMA voice call	B1 @ max. power	586	mA
	B8 @ max. power	640	mA
GPRS data transmission	EGSM900 (1UL/4DL) @ PCL 5	282	mA
	EGSM900 (2UL/3DL) @ PCL 5	451	mA
	EGSM900 (3UL/2DL) @ PCL 5	528	mA
	EGSM900 (4UL/1DL) @ PCL 5	613	mA
	DCS1800 (1UL/4DL) @ PCL 0	190	mA
	DCS1800 (2UL/3DL) @ PCL 0	297	mA
	DCS1800 (3UL/2DL) @ PCL 0	356	mA
	DCS1800 (4UL/1DL) @ PCL 0	439	mA
EDGE data transmission	EGSM900 (1UL/4DL) @ PCL 8	202	mA
	EGSM900 (2UL/3DL) @ PCL 8	326	mA
	EGSM900 (3UL/2DL) @ PCL 8	436	mA
	EGSM900 (4UL/1DL) @ PCL 8	556	mA
	DCS1800 (1UL/4DL) @ PCL 2	178	mA
	DCS1800 (2UL/3DL) @ PCL 2	278	mA
	DCS1800 (3UL/2DL) @ PCL 2	374	mA
	DCS1800 (4UL/1DL) @ PCL 2	476	mA
WCDMA data transmission	B1 (HSDPA) @ max power	552	mA
	B8 (HSDPA) @ max power	596	mA

	B1 (HSUPA) @ max power	573	mA
	B8 (HSUPA) @ max power	614	mA
EVDO/CDMA data transmission	BC0 @ max power	614	mA
LTE data transmission	LTE-FDD B1 @ max power	654	mA
	LTE-FDD B3 @ max power	653	mA
	LTE-FDD B5 @ max power	587	mA
	LTE-FDD B8 @ max power	638	mA
	LTE-TDD B34 @ max power	307	mA
	LTE-TDD B38 @ max power	407	mA
	LTE-TDD B39 @ max power	325	mA
	LTE-TDD B40 @ max power	401	mA
	LTE-TDD B41 @ max power	433	mA

Table 54: SC200E-EM&SC206E-EM Power Consumption

Description	Conditions	Typ.	Unit
OFF state	Power off	39.0	μA
GSM/GPRS supply current	Sleep state (USB disconnected) @ DRX = 2	4.99	mA
	Sleep state (USB disconnected) @ DRX = 5	4.24	mA
	Sleep state (USB disconnected) @ DRX = 9	4.01	mA
WCDMA supply current	Sleep state (USB disconnected) @ DRX = 6	4.57	mA
	Sleep state (USB disconnected) @ DRX = 7	4.17	mA
	Sleep state (USB disconnected) @ DRX = 8	3.97	mA
	Sleep state (USB disconnected) @ DRX = 9	3.85	mA
LTE-FDD supply current	Sleep state (USB disconnected) @ DRX = 5	6.26	mA
	Sleep state (USB disconnected) @ DRX = 6	4.98	mA
	Sleep state (USB disconnected) @ DRX = 7	4.31	mA

	Sleep state (USB disconnected) @ DRX = 8	4.01	mA
LTE-TDD supply current	Sleep state (USB disconnected) @ DRX = 5	6.36	mA
	Sleep state (USB disconnected) @ DRX = 6	5.03	mA
	Sleep state (USB disconnected) @ DRX = 7	4.38	mA
	Sleep state (USB disconnected) @ DRX = 8	4.02	mA
GSM voice call	GSM850 @ PCL 5	274	mA
	GSM850 @ PCL 12	139	mA
	GSM850 @ PCL 19	83	mA
	EGSM900 @ PCL 5	291	mA
	EGSM900 @ PCL 12	138	mA
	EGSM900 @ PCL 19	83	mA
	DCS1800 @ PCL 0	181	mA
	DCS1800 @ PCL 7	133	mA
	DCS1800 @ PCL 15	81	mA
	PCS1900 @ PCL 0	190	mA
	PCS1900 @ PCL 7	135	mA
	PCS1900 @ PCL 15	81	mA
WCDMA voice call	B1 @ max power	590	mA
	B2 @ max power	590	mA
	B4 @ max power	630	mA
	B5 @ max power	550	mA
	B8 @ max power	630	mA
GPRS data transmission	GSM850 (1UL/4DL) @ PCL 5	267	mA
	GSM850 (2UL/3DL) @ PCL 5	417	mA
	GSM850 (3UL/2DL) @ PCL 5	490	mA
	GSM850 (4UL/1DL) @ PCL 5	579	mA
	EGSM900 (1UL/4DL) @ PCL 5	287	mA

	EGSM900 (2UL/3DL) @ PCL 5	451	mA
	EGSM900 (3UL/2DL) @ PCL 5	524	mA
	EGSM900 (4UL/1DL) @ PCL 5	617	mA
	DCS1800 (1UL/4DL) @ PCL 0	188	mA
	DCS1800 (2UL/3DL) @ PCL 0	277	mA
	DCS1800 (3UL/2DL) @ PCL 0	344	mA
	DCS1800 (4UL/1DL) @ PCL 0	426	mA
	PCS1900 (1UL/4DL) @ PCL 0	193	mA
	PCS1900 (2UL/3DL) @ PCL 0	291	mA
	PCS1900 (3UL/2DL) @ PCL 0	352	mA
	PCS1900 (4UL/1DL) @ PCL 0	435	mA
EDGE data transmission	GSM850 (1UL/4DL) @ PCL 8	194	mA
	GSM850 (2UL/3DL) @ PCL 8	318	mA
	GSM850 (3UL/2DL) @ PCL 8	430	mA
	GSM850 (4UL/1DL) @ PCL 8	550	mA
	EGSM900 (1UL/4DL) @ PCL 8	200	mA
	EGSM900 (2UL/3DL) @ PCL 8	325	mA
	EGSM900 (3UL/2DL) @ PCL 8	438	mA
	EGSM900 (4UL/1DL) @ PCL 8	554	mA
	DCS1800 (1UL/4DL) @ PCL 2	173	mA
	DCS1800 (2UL/3DL) @ PCL 2	275	mA
	DCS1800 (3UL/2DL) @ PCL 2	376	mA
	DCS1800 (4UL/1DL) @ PCL 2	491	mA
	PCS1900 (1UL/4DL) @ PCL 2	171	mA
	PCS1900 (2UL/3DL) @ PCL 2	274	mA
	PCS1900 (3UL/2DL) @ PCL 2	373	mA
	PCS1900 (4UL/1DL) @ PCL 2	480	mA

WCDMA data transmission	B1 (HSDPA) @ max power	560	mA
	B2 (HSDPA) @ max power	550	mA
	B4 (HSDPA) @ max power	590	mA
	B5 (HSDPA) @ max power	515	mA
	B8 (HSDPA) @ max power	610	mA
	B1 (HSUPA) @ max power	575	mA
	B2 (HSUPA) @ max power	565	mA
	B4 (HSUPA) @ max power	600	mA
	B5 (HSUPA) @ max power	530	mA
	B8 (HSUPA) @ max power	600	mA
LTE data transmission	LTE-FDD B1 @ max power	645	mA
	LTE-FDD B2 @ max power	640	mA
	LTE-FDD B3 @ max power	630	mA
	LTE-FDD B4 @ max power	670	mA
	LTE-FDD B5 @ max power	580	mA
	LTE-FDD B7 @ max power	690	mA
	LTE-FDD B8 @ max power	585	mA
	LTE-FDD B20 @ max power	605	mA
	LTE-FDD B28 @ max power	620	mA
	LTE-TDD B38 @ max power	370	mA
	LTE-TDD B40 @ max power	370	mA
	LTE-TDD B41 @ max power	400	mA

Table 55: SC200E-NA&SC206E-NA Power Consumption

Description	Conditions	Typ.	Unit
OFF state	Power off	36.0	μA
LTE-FDD supply current	Sleep state (USB disconnected) @ DRX = 5	6.25	mA
	Sleep state (USB disconnected) @ DRX = 6	4.85	mA
	Sleep state (USB disconnected) @ DRX = 7	4.19	mA
	Sleep state (USB disconnected) @ DRX = 8	3.96	mA
LTE-TDD supply current	Sleep state (USB disconnected) @ DRX = 5	6.34	mA
	Sleep state (USB disconnected) @ DRX = 6	5.07	mA
	Sleep state (USB disconnected) @ DRX = 7	4.33	mA
	Sleep state (USB disconnected) @ DRX = 8	4.04	mA
LTE data transmission	LTE-FDD B2 @ max power	671	mA
	LTE-FDD B4 @ max power	649	mA
	LTE-FDD B5 @ max power	670	mA
	LTE-FDD B7 @ max power	822	mA
	LTE-FDD B12 @ max power	722	mA
	LTE-FDD B13 @ max power	742	mA
	LTE-FDD B14 @ max power	639	mA
	LTE-FDD B17@ max power	705	mA
	LTE-FDD B25 @ max power	707	mA
	LTE-FDD B26 @ max power	660	mA
	LTE-FDD B66 @ max power	673	mA
	LTE-FDD B71 @ max power	634	mA
	LTE-TDD B41 @ max power	423	mA

Table 56: SC200E-JP Power Consumption

Description	Conditions	Typ.	Unit
OFF state	Power off	TBD	μA
WCDMA supply current	Sleep state (USB disconnected) @ DRX = 6	TBD	mA
	Sleep state (USB disconnected) @ DRX = 7	TBD	mA
	Sleep state (USB disconnected) @ DRX = 8	TBD	mA
	Sleep state (USB disconnected) @ DRX = 9	TBD	mA
LTE-FDD supply current	Sleep state (USB disconnected) @ DRX = 5	TBD	mA
	Sleep state (USB disconnected) @ DRX = 6	TBD	mA
	Sleep state (USB disconnected) @ DRX = 7	TBD	mA
	Sleep state (USB disconnected) @ DRX = 8	TBD	mA
LTE-TDD supply current	Sleep state (USB disconnected) @ DRX = 5	TBD	mA
	Sleep state (USB disconnected) @ DRX = 6	TBD	mA
	Sleep state (USB disconnected) @ DRX = 7	TBD	mA
	Sleep state (USB disconnected) @ DRX = 8	TBD	mA
WCDMA voice call	B1 @ max power	TBD	mA
	B6 @ max power	TBD	mA
	B8 @ max power	TBD	mA
	B19 @ max power	TBD	mA
WCDMA data transmission	B1 (HSDPA) @ max power	TBD	mA
	B6 (HSDPA) @ max power	TBD	mA
	B8 (HSDPA) @ max power	TBD	mA
	B19 (HSDPA) @ max power	TBD	mA
	B1 (HSUPA) @ max power	TBD	mA
	B6 (HSUPA) @ max power	TBD	mA
	B8(HSUPA) @ max power	TBD	mA
	B19 (HSUPA) @ max power	TBD	mA

LTE data transmission	LTE-FDD B1 @ max power	TBD	mA
	LTE-FDD B3 @ max power	TBD	mA
	LTE-FDD B5 @ max power	TBD	mA
	LTE-FDD B8 @ max power	TBD	mA
	LTE-FDD B11 @ max power	TBD	mA
	LTE-FDD B18 @ max power	TBD	mA
	LTE-FDD B19 @ max power	TBD	mA
	LTE-FDD B21 @ max power	TBD	mA
	LTE-FDD B26 @ max power	TBD	mA
	LTE-FDD B28 @ max power	TBD	mA
	LTE-TDD B41 @ max power	TBD	mA

7.6. Tx Power

The following tables show the RF output power of the module.

Table 57: SC200E-CE RF Tx Power

Frequency Bands	Max. RF Output Power	Min. RF Output Power
EGSM900	33 dBm ±2 dB	5 dBm ±5 dB
DCS1800	30 dBm ±2 dB	0 dBm ±5 dB
WCDMA B1	23 dBm ±2 dB	< -49 dBm
WCDMA B8	23 dBm ±2 dB	< -49 dBm
EVDO/CDMA BC0	24 dBm +3/-1 dB	< -49 dBm
LTE-FDD B1	23 dBm ±2 dB	< -39 dBm
LTE-FDD B3	23 dBm ±2 dB	< -39 dBm
LTE-FDD B5	23 dBm ±2 dB	< -39 dBm
LTE-FDD B8	23 dBm ±2 dB	< -39 dBm
LTE-TDD B34	23 dBm ±2 dB	< -39 dBm

LTE-TDD B38	23 dBm ±2 dB	< -39 dBm
LTE-TDD B39	23 dBm ±2 dB	< -39 dBm
LTE-TDD B40	23 dBm ±2 dB	< -39 dBm
LTE-TDD B41	23 dBm ±2 dB	< -39 dBm

Table 58: SC200E-EM&SC206E-EM RF Tx Power

Frequency Bands	Max. RF Output Power	Min. RF Output Power
GSM850	33 dBm ±2 dB	5 dBm ±5 dB
EGSM900	33 dBm ±2 dB	5 dBm ±5 dB
DCS1800	30 dBm ±2 dB	0 dBm ±5 dB
PCS1900	30 dBm ±2 dB	0 dBm ±5 dB
WCDMA B1	23 dBm ±2 dB	< -49 dBm
WCDMA B2	23 dBm ±2 dB	< -49 dBm
WCDMA B4	23 dBm ±2 dB	< -49 dBm
WCDMA B5	23 dBm ±2 dB	< -49 dBm
WCDMA B8	23 dBm ±2 dB	< -49 dBm
LTE-FDD B1	23 dBm ±2 dB	< -39 dBm
LTE-FDD B2	23 dBm ±2 dB	< -39 dBm
LTE-FDD B3	23 dBm ±2 dB	< -39 dBm
LTE-FDD B4	23 dBm ±2 dB	< -39 dBm
LTE-FDD B5	23 dBm ±2 dB	< -39 dBm
LTE-FDD B7	23 dBm ±2 dB	< -39 dBm
LTE-FDD B8	23 dBm ±2 dB	< -39 dBm
LTE-FDD B20	23 dBm ±2 dB	< -39 dBm
LTE-FDD B28	23 dBm ±2 dB	< -39 dBm
LTE-TDD B38	23 dBm ±2 dB	< -39 dBm
LTE-TDD B40	23 dBm ±2 dB	< -39 dBm
LTE-TDD B41	23 dBm ±2 dB	< -39 dBm

Table 59: SC200E-NA&SC206E-NA RF Tx Power

Frequency Bands	Max. RF Output Power	Min. RF Output Power
LTE-FDD B2	23 dBm ±2 dB	< -39 dBm
LTE-FDD B4	23 dBm ±2 dB	< -39 dBm
LTE-FDD B5	23 dBm ±2 dB	< -39 dBm
LTE-FDD B7	23 dBm ±2 dB	< -39 dBm
LTE-FDD B12	23 dBm ±2 dB	< -39 dBm
LTE-FDD B13	23 dBm ±2 dB	< -39 dBm
LTE-FDD B14	23 dBm ±2 dB	< -39 dBm
LTE-FDD B17	23 dBm ±2 dB	< -39 dBm
LTE-FDD B25	23 dBm ±2 dB	< -39 dBm
LTE-FDD B26	23 dBm ±2 dB	< -39 dBm
LTE-FDD B66	23 dBm ±2 dB	< -39 dBm
LTE-FDD B71	23 dBm ±2 dB	< -39 dBm
LTE-TDD B41	23 dBm ±2 dB	< -39 dBm

Table 60: SC200E-JP RF Tx Power

Frequency Bands	Max. RF Output Power	Min. RF Output Power
WCDMA B1	23 dBm ±2 dB	< -49 dBm
WCDMA B6	23 dBm ±2 dB	< -49 dBm
WCDMA B8	23 dBm ±2 dB	< -49 dBm
WCDMA B19	23 dBm ±2 dB	< -49 dBm
LTE-FDD B1	23 dBm ±2 dB	< -39 dBm
LTE-FDD B3	23 dBm ±2 dB	< -39 dBm
LTE-FDD B5	23 dBm ±2 dB	< -39 dBm
LTE-FDD B8	23 dBm ±2 dB	< -39 dBm

LTE-FDD B11	23 dBm ±2 dB	< -39 dBm
LTE-FDD B18	23 dBm ±2 dB	< -39 dBm
LTE-FDD B19	23 dBm ±2 dB	< -39 dBm
LTE-FDD B21	23 dBm ±2 dB	< -39 dBm
LTE-FDD B26	23 dBm ±2 dB	< -39 dBm
LTE-FDD B28	23 dBm ±2 dB	< -39 dBm
LTE-TDD B41	23 dBm ±2 dB	< -39 dBm

NOTE

In GPRS and EDGE 4-slot Tx mode, the maximum output power is reduced by 4 dB. This design conforms to the GSM specification as described in *3GPP TS 51.010-1 subclause 13.16* and *subclause 13.17*.

7.7. Rx Sensitivity

The following table shows the RF receiving sensitivity of the module.

Table 61: SC200E-CE RF Rx Sensitivity (Unit: dBm)

Frequency Bands	Receiving Sensitivity (Typ.)			3GPP (SIMO)
	Primary	Diversity	SIMO	
EGSM900	-109.5	-	-	-102.4
DCS1800	-109.0	-	-	-102.4
WCDMA B1	-110.5	-111.0	-113.0	-106.7
WCDMA B8	-111.0	-111.0	-112.5	-103.7
EVDO/CDMA BC0	-108.5	-	-	-104
LTE-FDD B1 (10 MHz)	-98.0	-100.0	-102.0	-96.3
LTE-FDD B3 (10 MHz)	-98.5	-98.5	-101.5	-93.3
LTE-FDD B5 (10 MHz)	-99.5	-99.5	-102.5	-94.3

LTE-FDD B8 (10 MHz)	-99.0	-100.0	-102.5	-93.3
LTE-TDD B34 (10 MHz)	-98.0	-99.0	-101.5	-96.3
LTE-TDD B38 (10 MHz)	-97.0	-98.0	-99.5	-96.3
LTE-TDD B39 (10 MHz)	-98.0	-99.0	-101.5	-96.3
LTE-TDD B40 (10 MHz)	-97.5	-98.5	-101.0	-96.3
LTE-TDD B41 (10 MHz)	-96.0	-98.0	-99.5	-94.3

Table 62: SC200E-EM&SC206E-EM RF Rx Sensitivity (Unit: dBm)

Frequency Bands	Receiving Sensitivity (Typ.)			3GPP (SIMO)
	Primary	Diversity	SIMO	
GSM850	-109.5	-	-	-102.4
EGSM900	-108.5	-	-	-102.4
DCS1800	-109.5	-	-	-102.4
PCS1900	-108.5	-	-	-102.4
WCDMA B1	-109.0	-111.0	-112.5	-106.7
WCDMA B2	-109.0	-110.0	-112.5	-104.7
WCDMA B4	-109.0	-110.0	-111.0	-106.7
WCDMA B5	-110.0	-111.0	-112.5	-104.7
WCDMA B8	-110.5	-111.0	-112.5	-103.7
LTE-FDD B1 (10 MHz)	-97.5	-99.0	-101.5	-96.3
LTE-FDD B2 (10 MHz)	-97.0	-98.0	-100.5	-94.3
LTE-FDD B3 (10 MHz)	-98.5	-98.0	-101.5	-93.3
LTE-FDD B4 (10 MHz)	-97.0	-99.0	-101.0	-96.3
LTE-FDD B5 (10 MHz)	-99.0	-99.0	-102.0	-94.3
LTE-FDD B7 (10 MHz)	-97.0	-97.0	-100.0	-94.3
LTE-FDD B8 (10 MHz)	-99.0	-99.5	-102.0	-93.3
LTE-FDD B20 (10 MHz)	-99.0	-100.0	-102.5	-93.3
LTE-FDD B28 (10 MHz)	-99.0	-99.5	-102.0	-94.8

LTE-TDD B38 (10 MHz)	-97.0	-97.0	-99.5	-96.3
LTE-TDD B40 (10 MHz)	-97.5	-98.5	-100.5	-96.3
LTE-TDD B41 (10 MHz)	-96.0	-97.0	-99.5	-94.3

Table 63: SC200E-NA&SC206E-NA RF Rx Sensitivity (Unit: dBm)

Frequency Bands	Receiving Sensitivity (Typ.)			3GPP (SIMO)
	Primary	Diversity	SIMO	
LTE-FDD B2 (10 MHz)	-97.0	-98.5	-101.0	-94.3
LTE-FDD B4 (10 MHz)	-97.0	-98.0	-100.5	-96.3
LTE-FDD B5 (10 MHz)	-99.0	-98.5	-102.0	-94.3
LTE-FDD B7 (10 MHz)	-96.0	-98.0	-100.0	-94.3
LTE-FDD B12 (10 MHz)	-98.5	-98.0	-101.5	-93.3
LTE-FDD B13 (10 MHz)	-98.0	-99.0	-101.5	-93.3
LTE-FDD B14 (10 MHz)	-97.5	-98.5	-101.0	-93.3
LTE-FDD B17 (10 MHz)	-97.0	-99.0	-101.0	-93.3
LTE-FDD B25 (10 MHz)	-97.0	-98.5	-101.0	-92.8
LTE-FDD B26 (10 MHz)	-98.5	-99.5	-102.0	-93.8
LTE-FDD B66 (10 MHz)	-97.0	-97.5	-100.5	-95.8
LTE-FDD B71 (10 MHz)	-99.0	-100.5	-103.0	-93.5
LTE-TDD B41 (10 MHz)	-96.5	-96.5	-99.5	-94.3

Table 64: SC200E-JP RF Rx Sensitivity (Unit: dBm)

Frequency Bands	Receiving Sensitivity (Typ.)			3GPP (SIMO)
	Primary	Diversity	SIMO	
WCDMA B1	TBD	TBD	TBD	-106.7
WCDMA B6	TBD	TBD	TBD	-106.7
WCDMA B8	TBD	TBD	TBD	-103.7

WCDMA B19	TBD	TBD	TBD	-106.7
LTE-FDD B1 (10 MHz)	TBD	TBD	TBD	-96.3
LTE-FDD B3 (10 MHz)	TBD	TBD	TBD	-93.3
LTE-FDD B5 (10 MHz)	TBD	TBD	TBD	-94.3
LTE-FDD B8 (10 MHz)	TBD	TBD	TBD	-93.3
LTE-FDD B11 (10 MHz)	TBD	TBD	TBD	-96.3
LTE-FDD B18 (10 MHz)	TBD	TBD	TBD	-96.3
LTE-FDD B19 (10 MHz)	TBD	TBD	TBD	-96.3
LTE-FDD B21 (10 MHz)	TBD	TBD	TBD	-96.3
LTE-FDD B26 (10 MHz)	TBD	TBD	TBD	-93.8
LTE-FDD B28 (10 MHz)	TBD	TBD	TBD	-94.8
LTE-TDD B41 (10 MHz)	TBD	TBD	TBD	-94.3

7.8. ESD Protection

Static electricity occurs naturally and it may damage the module. Therefore, applying proper ESD countermeasures and handling methods is imperative. For example, wear anti-static gloves during the development, production, assembly and testing of the module; add ESD protection components to the ESD sensitive interfaces and points in the product design.

The following table shows the electrostatic discharge characteristics of the module.

Table 65: Electrostatic Discharge Characteristics (Temperature: 25 ºC, Humidity: 45 %)

Tested Interfaces	Contact Discharge	Air Discharge	Unit
VBAT, GND	±5	±10	kV
Antenna Interfaces	±5	±10	kV
Other Interfaces	±0.5	±1	kV

8 Mechanical Information

This chapter describes the mechanical dimensions of the module. All dimensions are measured in millimeter (mm), and the dimensional tolerances are ±0.2 mm unless otherwise specified.

8.1. Mechanical Dimensions

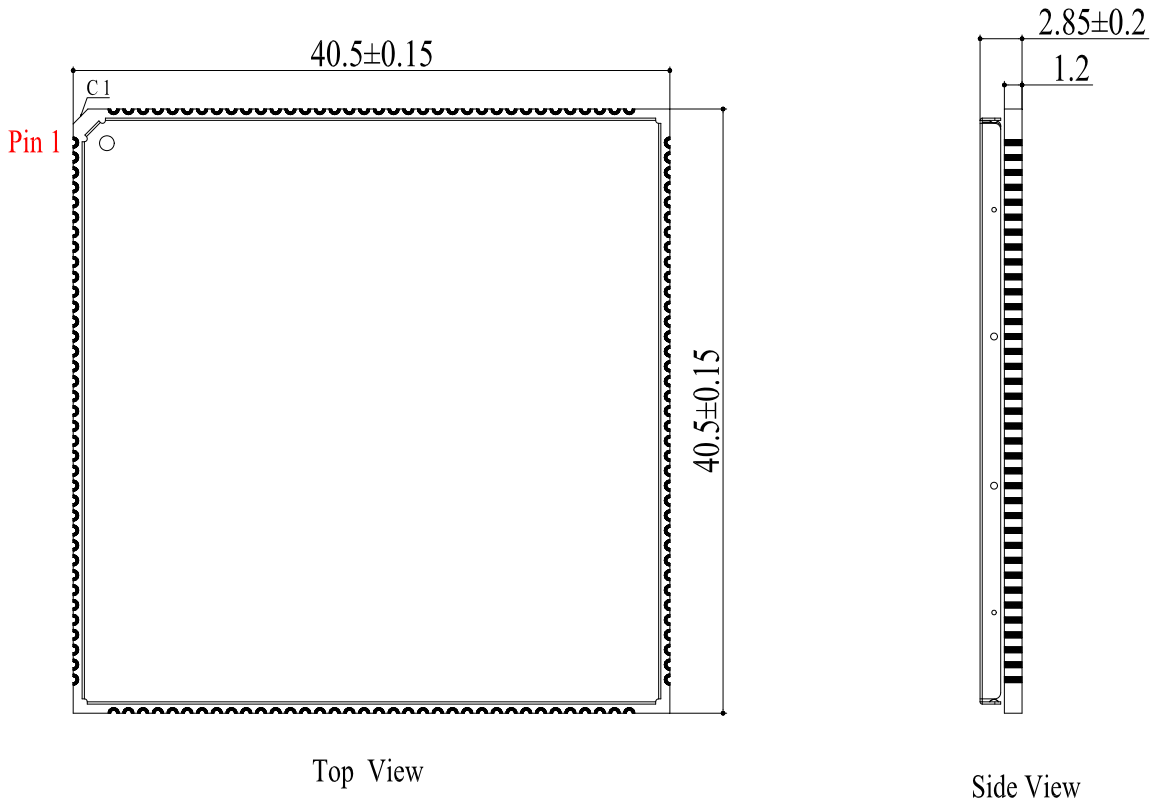

Figure 40: Module Top and Side Dimensions

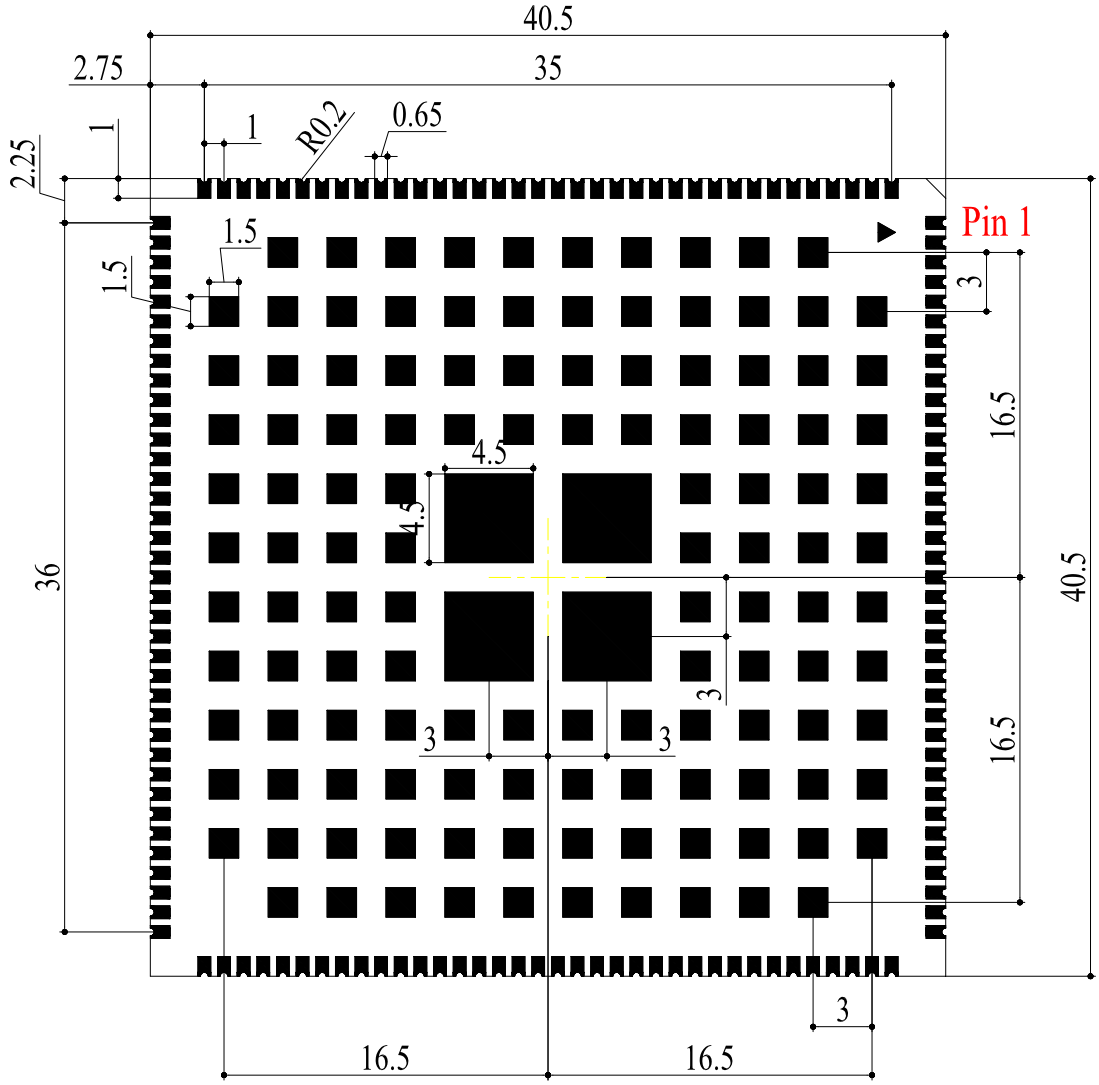

Figure 41: Module Bottom Dimensions (Bottom View)

NOTE

The package warpage level of the module conforms to *JEITA ED-7306* standard.

8.2. Recommended Footprint

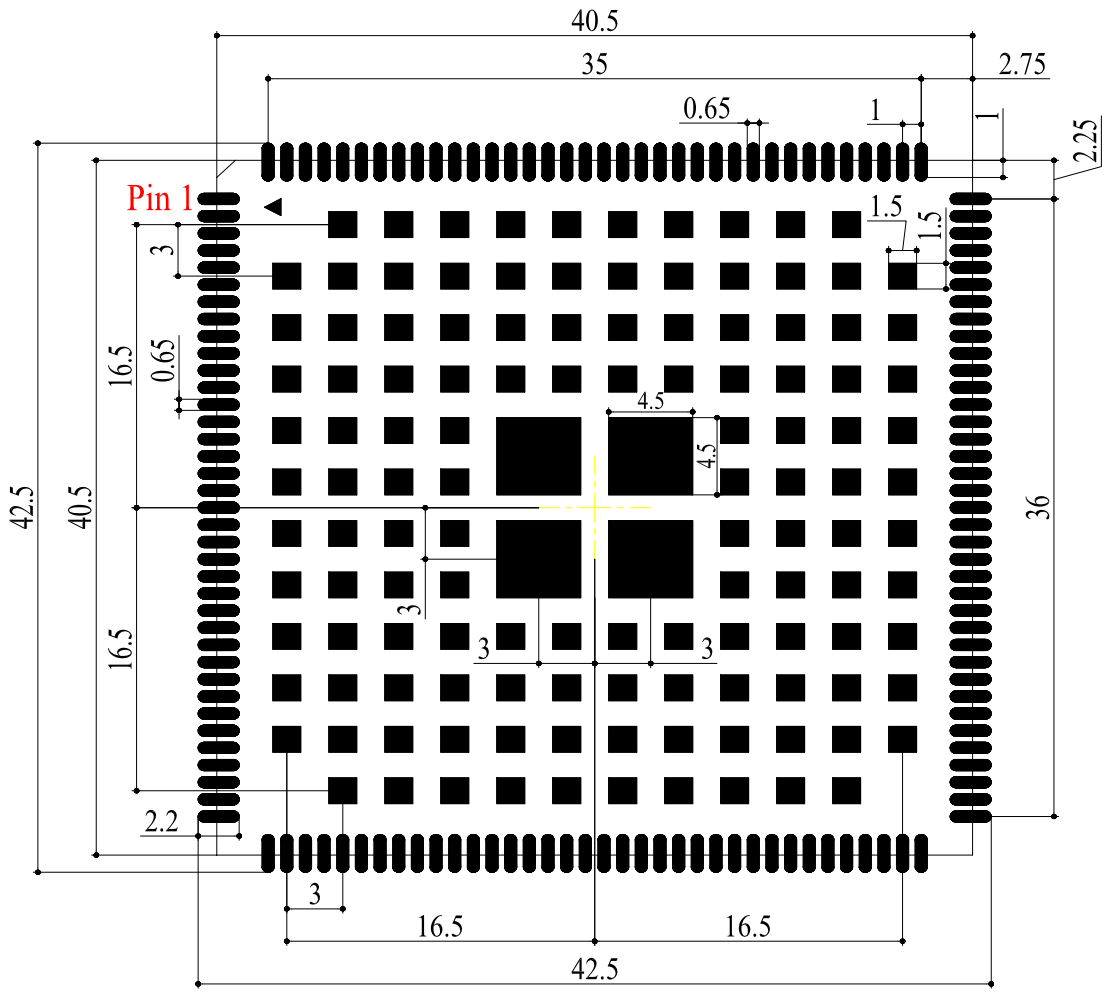

Figure 42: Recommended Footprint (Top View)

NOTE

Keep at least 3 mm between the module and other components on the motherboard to improve soldering quality and maintenance convenience.

8.3. Top and Bottom Views

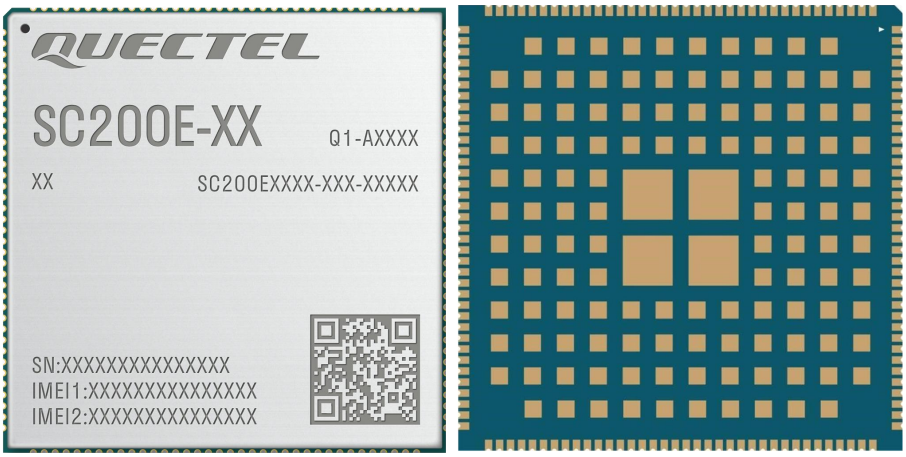

Figure 43: Top and Bottom Views of SC200E Series

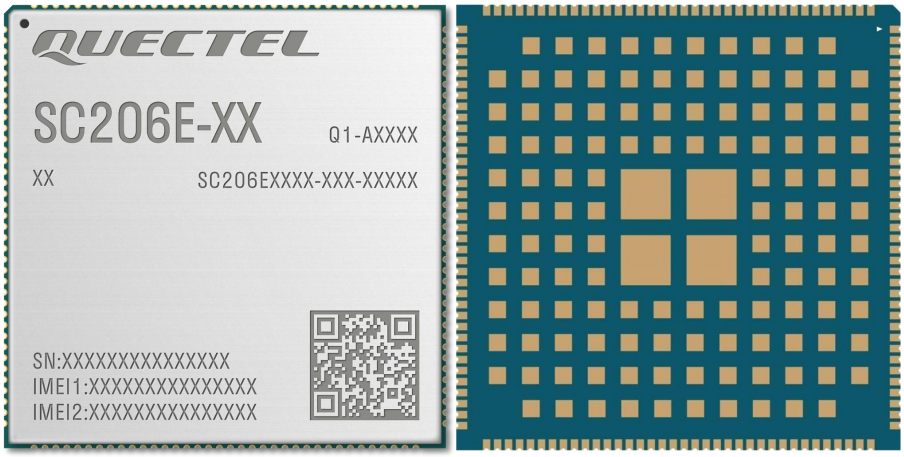

Figure 44: Top and Bottom Views of SC206E Series

NOTE

Images above are for illustration purpose only and may differ from the actual module. For authentic appearance and label, please refer to the module received from Quectel.

9 Storage, Manufacturing & Packaging

9.1. Storage Conditions

The module is provided with vacuum-sealed packaging. MSL of the module is rated as 3. The storage requirements are shown below.

1. Recommended Storage Condition: the temperature should be 23 ± 5 °C and the relative humidity should be 35–60 %.

2. Shelf life (in a vacuum-sealed packaging): 12 months in Recommended Storage Condition.

3. Floor life: 168 hours [7] in a factory where the temperature is 23 ±5 °C and relative humidity is below 60 %. After the vacuum-sealed packaging is removed, the module must be processed in reflow soldering or other high-temperature operations within 168 hours. Otherwise, the module should be stored in an environment where the relative humidity is less than 10 % (e.g., a dry cabinet).

4. The module should be pre-baked to avoid blistering, cracks and inner-layer separation in PCB under the following circumstances:

   - The module is not stored in Recommended Storage Condition;
   - Violation of the third requirement mentioned above;
   - Vacuum-sealed packaging is broken, or the packaging has been removed for over 24 hours;
   - Before module repairing.

5. If needed, the pre-baking should follow the requirements below:

   - The module should be baked for 8 hours at 120 ±5 °C;
   - The module must be soldered to PCB within 24 hours after the baking, otherwise it should be put in a dry environment such as in a dry cabinet.

[7] This floor life is only applicable when the environment conforms to *IPC/JEDEC J-STD-033*. It is recommended to start the solder reflow process within 24 hours after the package is removed if the temperature and moisture do not conform to, or are not sure to conform to *IPC/JEDEC J-STD-033*. And do not remove the packages of tremendous modules if they are not ready for soldering.

NOTE

1. To avoid blistering, layer separation and other soldering issues, extended exposure of the module to the air is forbidden.
2. Take out the module from the package and put it on high-temperature-resistant fixtures before baking. If shorter baking time is desired, see *IPC/JEDEC J-STD-033* for the baking procedure.
3. Pay attention to ESD protection, such as wearing anti-static gloves, when touching the modules.

9.2. Manufacturing and Soldering

Push the squeegee to apply the solder paste on the surface of stencil, thus making the paste fill the stencil openings and then penetrate to the PCB. Apply proper force on the squeegee to produce a clean stencil surface on a single pass. To guarantee module soldering quality, the thickness of stencil for the module is recommended to be 0.18–0.20 mm. For more details, see ***document [4]***.

The peak reflow temperature should be 235–246 ºC, with 246 ºC as the absolute maximum reflow temperature. To avoid damage to the module caused by repeated heating, it is strongly recommended that the module should be mounted only after reflow soldering for the other side of PCB has been completed. The recommended reflow soldering thermal profile (lead-free reflow soldering) and related parameters are shown below.

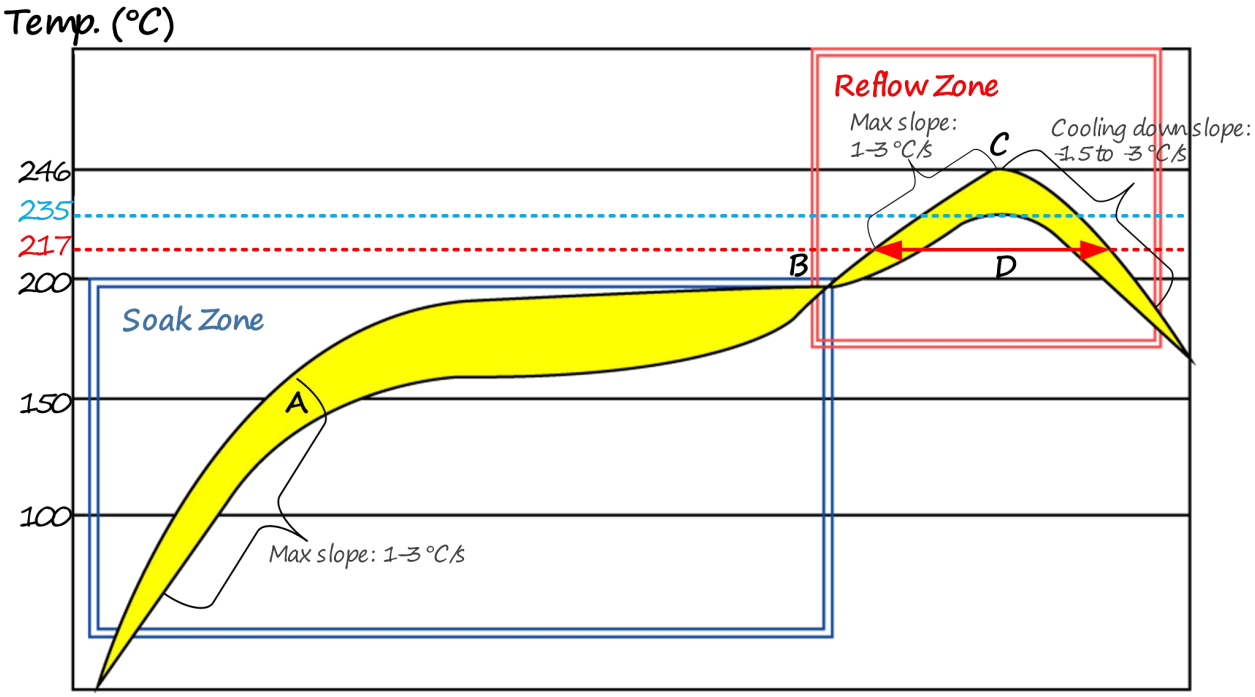

Figure 45: Recommended Reflow Soldering Thermal Profile

Table 66: Recommended Thermal Profile Parameters

Factor	Recommendation
Soak Zone	
Max slope	1–3 °C/s
Soak time (between A and B: 150 °C and 200 °C)	70–120 s
Reflow Zone	
Max slope	1–3 °C/s
Reflow time (D: over 217 °C)	40–70 s
Max temperature	235 °C to 246 °C
Cooling down slope	-1.5 to -3 °C/s
Reflow Cycle	
Max reflow cycle	1

NOTE

1. If a conformal coating is necessary for the module, do NOT use any coating material that may chemically react with the PCB or shielding cover, and prevent the coating material from flowing into the module.
2. Avoid using ultrasonic technology for module cleaning since it can damage crystals inside the module.
3. Due to the complexity of the SMT process, please contact Quectel Technical Support in advance for any situation that you are not sure about, or any process (e.g., selective soldering, ultrasonic soldering) that is not mentioned in ***document [4]***.

9.3. Packaging Specification

This chapter describes only the key parameters and process of packaging. All figures below are for reference only. The appearance and structure of the packaging materials are subject to the actual delivery.

The module adopts carrier tape packaging and details are as follow:

9.3.1. Carrier Tape

Dimension details are as follow:

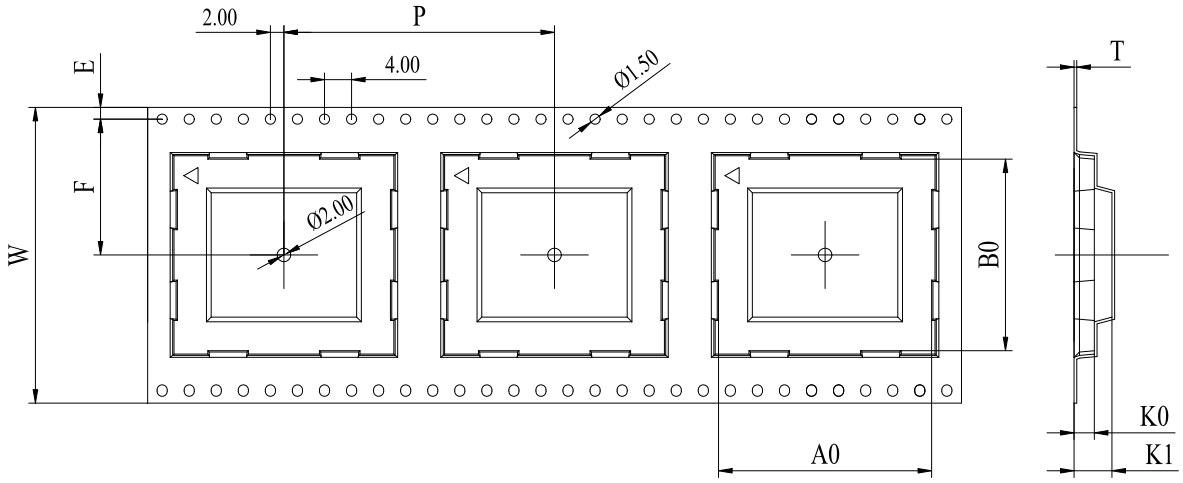

Figure 46: Carrier Tape Dimension Drawing

Table 67: Carrier Tape Dimension Table (Unit: mm)

W	P	T	A0	B0	K0	K1	F	E
72	56	0.4	41.2	41.2	4	4.6	34.2	1.75

9.3.2. Plastic Reel

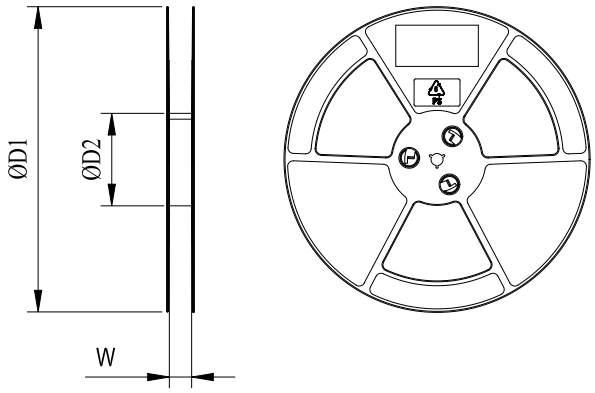

Figure 47: Plastic Reel Dimension Drawing

Table 68: Plastic Reel Dimension Table (Unit: mm)

øD1	øD2	W
380	180	72.5

9.3.3. Packaging Process

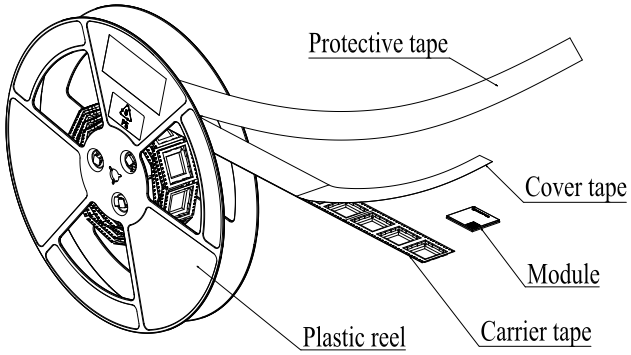

Place the module into the carrier tape and use the cover tape to cover it; then wind the heat-sealed carrier tape to the plastic reel and use the protective tape for protection. 1 plastic reel can load 200 modules.

Place the packaged plastic reel, 1 humidity indicator card and 1 desiccant bag into a vacuum bag, then vacuumize it.

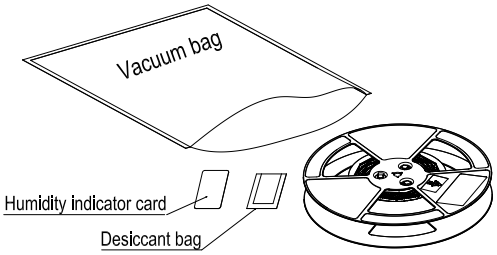

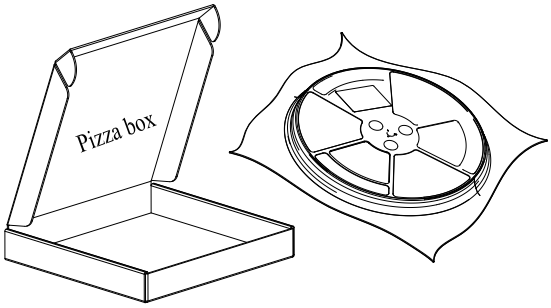

Place the vacuum-packed plastic reel into the pizza box.

Put 4 packaged pizza boxes into 1 carton box and seal it. 1 carton box can pack 800 modules.

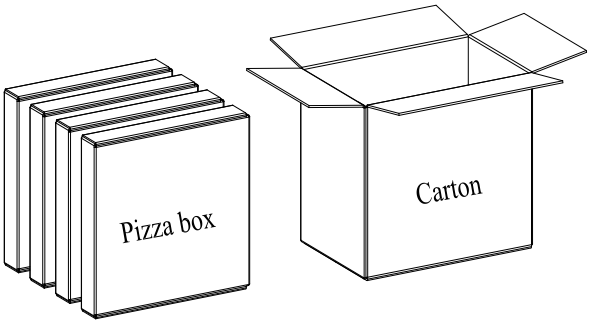

Figure 48: Packaging Process

10 Appendix References

Table 69: Related Documents

Document Name
[1] Quectel_Smart_EVB_G2_User_Guide
[2] Quectel_SC200E&SC206E_Series_GPIO_Configuration
[3] Quectel_RF_Layout_Application_Note
[4] Quectel_Module_Secondary_SMT_Application_Note

Table 70: Terms and Abbreviations

Abbreviation	Description
3GPP	3rd Generation Partnership Project
ADC	Analog-to-Digital Converter
ADSP	Audio Digital Signal Processor
ALS	Ambient Light Sensor
AMR-NB	Adaptive Multi Rate-Narrow Band Speech Codec
AMR-WB	Adaptive Multi-Rate Wideband
AP	Access Point/Application Processor
ARM	Advanced RISC Machine
BDS	BeiDou Navigation Satellite System
BLE	Bluetooth Low Energy
bps	Bits per Second
BR	Basic Rate

CDMA	Code Division Multiple Access
CEP	Circular Error Probable
CPE	Customer-Premise Equipment
CS	Coding Scheme
CSD	Circuit Switched Data
CSI	Camera Serial Interface
CTS	Clear to Send
DC	Dual Carrier
DC-HSPA+	Dual Carrier High Speed Packet Access Plus
DCE	Data Communications Equipment/Data Circuit terminating Equipment
DCS	Digital Cellular System
DL	Downlink
DPSK	Differential Phase Shift Keying
DQPSK	Differential Quadrature Reference Phase Shift Keying
DRX	Discontinuous Reception
DSI	Display Serial Interface
DSP	Digital Signal Processor
DTE	Data Terminal Equipment
ECM	Electret Condenser Microphone
EDGE	Enhanced Data Rate for GSM Evolution
EDR	Enhanced Data Rate
EFR	Enhanced Full Rate
EGSM	Extended GSM
eMMC	Embedded Multimedia Card
eSCO	Extended Synchronous Connection Oriented

ESD	Electrostatic Discharge
ESR	Equivalent Series Resistance
ETSI	European Telecommunications Standards Institute
EVB	Evaluation Board
EVDO	Evolution-Data Optimized
EVRC	Enhanced Variable Rate Codec
FDD	Frequency Division Duplex
fps	Frame per Second
FR	Full Rate
Galileo	Galileo Satellite Navigation System (EU)
GFSK	Gaussian Frequency Shift Keying
GLONASS	Global Navigation Satellite System (Russia)
GMSK	Gaussian Minimum Shift Keying
GND	Ground
GNSS	Global Navigation Satellite System
GPIO	General Purpose Input/Output
GPRS	General Packet Radio Service
GPS	Global Positioning System
GPU	Graphics Processing Unit
GRFC	Generic RF control
GSM	Global System for Mobile Communications
G.W.	Gross Weight
HR	Half Rate
HS	High Speed
HSDPA	High Speed Downlink Packet Access

HSPA+	High-Speed Packet Access+
HSUPA	High Speed Uplink Packet Access
HT	High Throughput
I2C	Inter-Integrated Circuit
IC	Integrated Circuit
IEEE	Institute of Electrical and Electronics Engineers
IMT-2000	International Mobile Telecommunications for the year 2000
I/O	Input/Output
$I_I$max	Maximum Input Load Current
$I_O$max	Maximum Output Load Current
ISP	Image Signal Processor/Internet Service Provider
LCC	Leadless Chip Carrier
LCD	Liquid Crystal Display
LCM	LCD Module
LDO	Low Dropout Regulator
LE	Low Energy
LED	Light Emitting Diode
LGA	Land Grid Array
LNA	Low Noise Amplifier
LPDDR	Low-Power Double Data Rate
LTE	Long-Term Evolution
M2M	Machine to Machine
MAC	Media Access Control
MCS	Modulation and Coding Scheme
MEMS	Micro-Electro-Mechanical System

MIC	Microphone
MIMO	Multi-Input Multi-Output / Multiple Input Multiple Output
MIPI	Mobile Industry Processor Interface
MP	Megapixel
MO	Mobile Originating/Originated
MOQ	Minimum Order Quantity
MSL	Moisture Sensitivity Levels
MT	Mobile Terminating/Terminated
NavIC	Indian Regional Navigation Satellite System
N.W.	Net Weight
NFC	Near Field Communication
NTC	Negative Temperature Coefficient
OTA	Over-the-Air Upgrade
OTG	On-The-Go
OTP	One Time Programable
PA	Power Amplifier
PC	Personal Computer
PCB	Printed Circuit Board
PCL	Power Control Level
PCS	Personal Communication Service
PDA	Personal Digital Assistant
PDU	Protocol Data Unit
PHY	Physical Layer
PMU	Power Management Unit
POS	Point of Sale

PWM	Pulse Width Modulation
PSK	Phase Shift Keying
QAM	Quadrature Amplitude Modulation
QPSK	Quadrature Phase Shift Keying
QZSS	Quasi-Zenith Satellite System
RF	Radio Frequency
RHCP	Right Hand Circular Polarization
RoHS	Restriction of Hazardous Substances
RTC	Real Time Clock
RTS	Request to Send
SBAS	Satellite-Based Augmentation System
SCO	Synchronous Connection Oriented
SD	Secure Digital
SIMO	Single Input Multiple Output
SMD	Surface Mounting Device
SMS	Short Message Service
SMT	Surface Mount Technology
STA	Station
TDD	Time-Division Duplex
TP	Touch Panel
TTFF	Time to First Fix
TVS	Transient Voltage Suppressor
UART	Universal Asynchronous Receiver & Transmitter
UL	Uplink
UMTS	Universal Mobile Telecommunications System

USB	Universal Serial Bus
(U)SIM	(Universal) Subscriber Identity Module
VBAT	Voltage at Battery (Pin)
VHT	Very High Throughput
Vmax	Maximum Voltage
Vmin	Minimum Voltage
Vnom	Nominal Voltage
$V_I$max	Absolute Maximum Input Voltage
$V_I$min	Absolute Minimum Input Voltage
V_{IH}min	Minimum High-level Input Voltage
V_{IL}max	Maximum Low-level Input Voltage
$V_O$max	Maximum Output Voltage
V_{OH}min	Minimum High-level Output Voltage
V_{OL}max	Maximum Low-level Output Voltage
Vrms	Root Mean Square Voltage
VSWR	Voltage Standing Wave Ratio
WAPI	WLAN Authentication and Privacy Infrastructure
WCDMA	Wideband Code Division Multiple Access
Wi-Fi	Wireless Fidelity
WLAN	Wireless Local Area Network

FCC Statement

Warning: Changes or modifications to this unit not expressly approved by the party responsible for compliance could void the user's authority to operate the equipment.

NOTE: This equipment has been tested and found to comply with the limits for a Class B digital device, pursuant to Part 15 of the FCC Rules. These limits are designed to provide reasonable protection against harmful interference in a residential installation. This equipment generates, uses and can radiate radio frequency energy and, if not installed and used in accordance with the instructions, may cause harmful interference to radio communications.

However, there is no guarantee that interference will not occur in a particular installation. If this equipment does cause harmful interference to radio or television reception, which can be determined by turning the equipment off and on, the user is encouraged to try to correct the interference by one or more of the following measures:

- Reorient or relocate the receiving antenna.
- Increase the separation between the equipment and receiver.
- Connect the equipment into an outlet on a circuit different from that to which the receiver is connected.
- Consult the dealer or an experienced radio/TV technician for help

The device must not be co-located or operating in conjunction with any other antenna or transmitter. This device complies with Part 15 of the FCC Rules. Operation is subject to the following two conditions : (1) this device may not cause harmful interference, and (2) this device must accept any interference received, including interference that may cause undesired operation.

FCC Radiation Exposure Statement
This equipment should be installed and operated with minimum distance 20cm between the radiator and your body.

Does not comply with the use restrictions of the product:
Portable devices used close with human's body (within 20cm), Like Cell phone, Notebook etc.

Integration instructions for host product manufacturers according to KDB 996369 D03 OEM Manual v01

2.2 List of applicable FCC rules
FCC Part 15 Subpart C 15.247 & 15.209 &15.407.
2.3 Specific operational use conditions
The module can be used for mobile applications with a maximum 1.28 dBi antenna. The host manufacturer installing this module into their product must ensure that the final compos it product complies with the FCC requirements by a technical assessment or evaluation to the FCC rules, including the transmitter operation. The host manufacturer has to be aware not to provide information to the end user regarding how to install or remove this RF module in the user's manual of the end product which

integrates this module The end user manual shall include all required regulatory information/warning as show in this manual.

2.4 Limited module procedures

Not applicable The module is a Single module and complies with the requirement of FCC Part 15.212.

2.5 Trace antenna designs

Not applicable The module has its own antenna, and doesn't need a hosts printed board micro strip trace antenna etc.

2.6 RF exposure considerations

The module must be installed in the host equipment such that at least 20cm is maintained between the antenna and users" body; and if RF exposure statement or module layout is changed, then the host product manufacturer required to take responsibility of the module through a change in FCC ID or new application The FCC ID of the module cannot be used on the final product In these circumstances, the host manufacturer will be responsible for reevaluating the end product (including the transmitter) and obtaining a separate FCC authorization.

2.7 Antennas

Antenna Specification are as follows:
Type: External Antenna
Gain: 2.4G: 0.47dBi Max; 5G:1.28dBi Max
This device is intended only for host manufacturers under the following conditions: The transmitter module may not be co-located with any other transmitter or antenna; The module shall be only used with the internal antenna(s) that has been originally tested and certified with this module. The antenna must be either permanently attached or employ a "unique" antenna coupler.
As long as the conditions above are met, further transmitter test will not be required However, the host manufacturer is still responsible for testing their end-product for any additional compliance requirements required with this module installed (for example, digital device emissions, PC peripheral requirements, etc).

2.8 Label and compliance information

Host product manufacturers need to provide a physical or e-label stating "Contains FCC ID: XMR2024SC200EWF" with their finished product.

2.9 Information on test modes and additional testing requirements

Host manufacturer must perform test of radiated & conducted emission and spurious emission, e.t.c according to the actual test modes for a stand-alone modular transmitter in a host, as well as for multiple simultaneously transmitting modules or other transmitters in a host product. Only when all the test results of test modes comply with FCC requirements, then the end product can be sold legally.

2.10 Additional testing, Part 15 Subpart B disclaimer

The modular transmitter is only FCC authorized for FCC Part 15 Subpart C 15.247 & 15 209 &15.407 and that the host product manufacturer is responsible for compliance to any other FCC rules that apply

to the host not covered by the modular transmitter grant of certification. If the grantee markets their product as being Part 15 Subpart B compliant (when it also contains unintentional-radiator digital circuity), then the grantee shall provide a notice stating that the final host product still requires Part 15 Subpart B compliance testing with the modular transmitter installed.

Federal Communication Commission Statement (FCC, U S)

This equipment has been tested and found to comply with the limits for a Class B digital device, pursuant to Part 15 of the FCC Rules These limits are designed to provide reasonable protection against harmful interference in a residential installation This equipment generates, uses and can radiate radio frequency energy and, if not installed and used in accordance with the instructions, may cause harmful interference to radio communications However, there is no guarantee that
interference will not occur in a particular installation If this equipment does cause harmful interference to radio or television reception, which can be determined by turning the equipment off and on, the user is encouraged to try to correct the interference by one of the following measures:

- Reorient or relocate the receiving antenna
- Increase the separation between the equipment and receiver
- Connect the equipment into an outlet on a circuit different from that to which the receiver is connected
- Consult the dealer or an experienced radio/TV technician for help

This device complies with Part 15 of the FCC Rules Operation is subject to the following two conditions: (1) This device may not cause harmful interference, and (2) this device must accept any interference received, including interference that may cause undesired operation.

FCC Caution:

Any changes or modifications not expressly approved by the party responsible for compliance could void the user's authority to operate this equipment.

IMPORTANT NOTES

Co-location warning:

This transmitter must not be co-located or operating in conjunction with any other antenna or transmitter.

OEM integration instructions:

This device is intended only for OEM integrators under the following conditions:

The transmitter module may not be co-located with any other transmitter or antenna The module shall be only used with the external antenna(s) that has been originally tested and certified with this module.

As long as the conditions above are met, further transmitter test will not be required. However, the OEM integrator is still responsible for testing their end-product for any additional compliance requirements required with this module installed (for example, digital device emissions, PC peripheral requirements, etc.).

Validity of using the module certification:

In the event that these conditions cannot be met (for example certain laptop configurations or co-location with another transmitter), then the FCC authorization for this module in combination with the host equipment is no longer considered valid and the FCC ID of the module cannot be used on the final product In these circumstances, the OEM integrator will be responsible for re-evaluating the end product (including the transmitter) and obtaining a separate FCC authorization.

End product labeling:

The final end product must be labeled in a visible area with the following: "Contains Transmitter Module FCC ID: XMR2024SC200EWF"

Information that must be placed in the end user manual:

The OEM integrator has to be aware not to provide information to the end user regarding how to install or remove this RF module in the user's manual of the end product which integrates this module.The end user manual shall include all required regulatory information/warning as show in this manual.

IC Statement

This device contains licence-exempt transmitter(s)/receiver(s) that comply with Innovation, Science and Economic Development Canada's licence-exempt RSS(s). Operation is subject to the following two conditions:

(1) This device may not cause interference.

(2) This device must accept any interference, including interference that may cause undesired operation of the device.

l'appareil contient des émetteurs/récepteurs exempts de licence qui sont conformes aux CNR exempts de licence d'Innovation, Sciences et Développement économique Canada. L'exploitation est soumise aux deux conditions suivantes :

(1) l'appareil ne doit pas produire de brouillage,

(2) l'utilisateur de l'appareil doit accepter tout brouillage radioélectrique subi, même si le brouillage est susceptible d'en compromettre le fonctionnement.

IC Radiation Exposure Statement

This equipment complies with FCC/IC RSS-102 radiation exposure limits set forth for an uncontrolled environment. This equipment should be installed and operated with minimum distance 20cm between the radiator & your body.

ce matériel est conforme aux limites de dose d'exposition aux rayonnements, FCC / CNR-102 énoncée dans un autre environnement.cette eqipment devrait être installé et exploité avec distance minimale de 20 entre le radiateur et votre corps.

RSS-247 Section 6.4 (5) (6) (for local area network devices, 5GHz)

The user manual for local area network devices shall contain instructions related to the restrictions mentioned in the above sections, namely that:

(i) the device for operation in the band 5150-5250 MHz is only for indoor use to reduce the potential for harmful interference to co-channel mobile satellite systems;

(ii) the maximum antenna gain permitted for devices in the bands 5250-5350 MHz and 5470-5725 MHz shall comply with the e.i.r.p. limit; and

(iii) the maximum antenna gain permitted for devices in the band 5725-5825 MHz shall comply with the

e.i.r.p. limits specified for point-to-point and non point-to-point operation as appropriate.

(i)Les dispositifs fonctionnant dans la bande 5150-5250 MHz sont réservés uniquement pour une utilisation à l'intérieur afin de réduire les risques de brouillage préjudiciable aux systèmes de satellites mobiles utilisant les mêmes canaux.
(ii) le gain d'antenne maximal autorisé pour les appareils dans les bandes 5250-5350 MHz et 5470-5725 MHz doivent respecter le pire limiter; et
(iii) le gain d'antenne maximal autorisé pour les appareils dans la bande 5725-5825 MHz doivent respecter le pire limites spécifiées pour le point-à-point et l'exploitation non point à point, le cas échéant.

Users should also be advised that high-power radars are allocated as primary users (i.e. priority users) of the bands 5250-5350 MHz and 5650-5850 MHz and that these radars could cause interference and/or damage to LE-LAN devices.

Les utilisateurs de radars de haute puissance sont désignés utilisateurs principaux (c.-à-d., qu'ils ont la priorité) pour les bandes 5250-5350 MHz et 5650-5850 MHz et que ces radars pourraient causer du brouillage et/ou des dommages aux dispositifs LAN-EL.