TEST REPORT

Applicant:	Quectel Wireless Solutions Co., Ltd.
EUT Description:	5G RedCap Sub-6 GHz M.2 Module
Model:	RM255C-GL
Brand:	QUECTEL
FCC ID:	XMR2025RM255CGL
Standards:	FCC CFR Title 47 Part 2 FCC CFR Title 47 Part 96
Date of Receipt:	2025/02/26
Date of Test:	2025/02/26 to 2025/05/28
Date of Issue:	2025/05/28

TOWE. tested the above equipment in accordance with the requirements set forth in the above standards. The test results show that the equipment tested is capable of demonstrating compliance with the requirements as documented in this report.

the results documented in this report apply only the tested sample, under the conditions and modes of operation as described herein. It is the manufacturer's responsibility assure that additional production units of the model are manufactured with identical electrical and mechanical components. All sample tested were in good operating condition throughout the entire test program. Measurement Uncertainties are published for informational purposes only and were not taken into account unless noted otherwise. without written approval of TOWE, the test report shall not be reproduced except in full.

ACCREDITED
CERTIFICATE #7088.01

Huang Kun
Approved By:

Chen Chengfu
Reviewed By:

All rights reserved. Unless otherwise specified, no part of this report may be reproduced or utilized in any part, form or by any means, electronic or mechanical, including photocopying and microfilm, without permission in writing from TOWE.

Revision History

Rev.	Issue Date	Description	Revised by
01	2025/05/28	Original	Chen Chengfu

All rights reserved. Unless otherwise specified, no part of this report may be reproduced or utilized in any part, form or by any means, electronic or mechanical, including photocopying and microfilm, without permission in writing from TOWE.

Summary of Test Results

FCC Part	Test Band	Test Item	Test Result
§96.41	LTE Band 42/43/48	Maximum EIRP and Maximum PSD	Pass
§96.41	LTE Band 42/43/48	Peak-Average Ratio	Pass
§2.1049	LTE Band 42/43/48	Occupied Bandwidth	Pass
§2.1051 §96.41	LTE Band 42/43/48	Band Edge	Pass
§2.1051 §96.41	LTE Band 42/43/48	Spurious Emission at Antenna Terminals	Pass
§2.1053 §96.41	LTE Band 42/43/48	Field Strength of Spurious Radiation	Pass
§2.1055 §96.41	LTE Band 42/43/48	Frequency Stability	Pass
§96.41	LTE Band 48	Adjacent Channel Leakage Ratio	Pass
Remark: Pass: Meet the requirement.			

All rights reserved. Unless otherwise specified, no part of this report may be reproduced or utilized in any part, form or by any means, electronic or mechanical, including photocopying and microfilm, without permission in writing from TOWE.

Table of Contents

1 General Description 5
1.1 Lab Information 5
1.1.1 Testing Location 5
1.1.2 Test Facility / Accreditations 5
1.2 Client Information 5
1.2.1 Applicant 5
1.2.2 Manufacturer 5
1.3 Product Information 6
2 Test Configuration 7
2.1 Test Channel 7
2.2 Worst-case configuration and Mode 8
2.3 Support Unit used in test 8
2.4 Test Environment 8
2.5 Test RF Cable 8
2.6 Modifications 8
2.7 Test Setup Diagram 9
2.7.1 Conducted Configuration 9
2.7.2 Radiated Configuration 10
3 Equipment and Measurement Uncertainty 11
3.1 Test Equipment List 11
3.2 Measurement Uncertainty 13
4 Test Results 14
4.1 Maximum EIRP and Maximum PSD 14
4.2 Peak-Average Ratio 16
4.3 Occupied Bandwidth 17
4.4 Band Edge and Emission Mask 18
4.5 Spurious Emission at Antenna Terminals 19
4.6 Field Strength of Spurious Radiation 20
4.7 Frequency Stability V.S. Temperature, Voltage 22
5 Test Setup Photos 23
Appendix 24

All rights reserved. Unless otherwise specified, no part of this report may be reproduced or utilized in any part, form or by any means, electronic or mechanical, including photocopying and microfilm, without permission in writing from TOWE.

1 General Description

1.1 Lab Information

1.1.1 Testing Location

These measurements tests were conducted at the Sushi TOWE Wireless Testing(Shenzhen) Co., Ltd. facility located at F401 and F101, Building E, Hongwei Industrial Zone, Liuxian 3rd Road, Bao'an District, Shenzhen, China. The measurement facility is compliant with the test site requirements specified in ANSI C63.4-2014
Tel.: +86-755-27212361
Contact Email: info@towewireless.com

1.1.2 Test Facility / Accreditations

A2LA (Certificate Number: 7088.01)
This laboratory is accredited in accordance with the recognized International Standard ISO/IEC 17025:2017 General requirements for the competence of testing and calibration laboratories. This accreditation demonstrates technical competence for a defined scope and the operation of a laboratory quality management system (refer to joint ISO-ILAC-IAF Communiqué dated April 2017).

FCC Designation No.: CN1353
Sushi TOWE Wireless Testing(Shenzhen) Co., Ltd. has been recognized as an accredited testing laboratory. Designation Number: CN1353.

ISED CAB identifier: CN0152
Sushi TOWE Wireless Testing(Shenzhen) Co., Ltd. has been recognized by ISED as an accredited testing laboratory.
CAB identifier: CN0152
Company Number: 31000

1.2 Client Information

1.2.1 Applicant

Applicant:	Quectel Wireless Solutions Co., Ltd.
Address:	Building 5, Shanghai Business Park Phase III (Area B), No.1016 Tianlin Road, Minhang District, Shanghai, 200233, China.

1.2.2 Manufacturer

Manufacturer:	Quectel Wireless Solutions Co., Ltd.
Address:	Building 5, Shanghai Business Park Phase III (Area B), No.1016 Tianlin Road, Minhang District, Shanghai, 200233, China.

All rights reserved. Unless otherwise specified, no part of this report may be reproduced or utilized in any part, form or by any means, electronic or mechanical, including photocopying and microfilm, without permission in writing from TOWE.

1.3 Product Information

EUT Description:	5G RedCap Sub-6 GHz M.2 Module		
Model:	RM255C-GL		
Brand:	QUECTEL		
Hardware Version:	R1.0		
Software Version:	RM255CGLAAR01A01M2G		
Power Class:	Class 2: LTE Band 42; LTE Band 43; Class 3: All		
IMEI:	866243060020764		
Device Capabilities:			
Modulation Type:	LTE:	☒ QPSK, ☒ 16QAM, ☒ 64QAM, ☒ 256QAM	
Operation Frequency Range:	Band	TX Frequency	RX Frequency
	LTE Band 42*	3550 to 3600 MHz	3550 to 3600 MHz
	LTE Band 43*	3600 to 3700 MHz	3600 to 3700 MHz
	LTE Band 48*	3550 ~ 3700 MHz	3550 ~ 3700 MHz
	Note*: The frequency range of LTE Band 48 covers the frequency range of LTE Band 42(part 96) and LTE Band 43, so LTE Band 42(part 96) and LTE Band 43 are exempt from testing.		
Antenna Type:	☒ External, ☐ Integrated		
Antenna Gain:	Band	Ant1 (dBi)	
	LTE Band 42	-6.12	
	LTE Band 43	-7.10	
	LTE Band 48	-6.12	
Remark: 1.The above EUT's information was declared by applicant, please refer to the specifications or user's manual for more detailed description. 2.RM255C-GL has two versions, one is the standard version, the other is customized version, refer to the statement provided by applicant.			

All rights reserved. Unless otherwise specified, no part of this report may be reproduced or utilized in any part, form or by any means, electronic or mechanical, including photocopying and microfilm, without permission in writing from TOWE.

2 Test Configuration

2.1 Test Channel

Test Mode	Bandwidth	TX / RX	RF Channel		
			Low (L)	Middle (M)	High (H)
LTE Band 42 (3550-3600)	5MHz	TX	Channel 40115	Channel 43340	Channel 43565
			3552.5 MHz	3575 MHz	3597.5 MHz
		RX	Channel 40115	Channel 43340	Channel 43565
			3552.5 MHz	3575 MHz	3597.5 MHz
	10MHz	TX	Channel 43140	Channel 43340	Channel 43540
			3555 MHz	3575 MHz	3595 MHz
		RX	Channel 43140	Channel 43340	Channel 43540
			3555 MHz	3575 MHz	3595 MHz
	15MHz	TX	Channel 43165	Channel 43340	Channel 43515
			3557.5 MHz	3575 MHz	3592.5 MHz
		RX	Channel 43165	Channel 43340	Channel 43515
			3557.5 MHz	3575 MHz	3592.5 MHz
	20MHz	TX	Channel 43190	Channel 43340	Channel 43490
			3560 MHz	3575 MHz	3590 MHz
		RX	Channel 43190	Channel 43340	Channel 43490
			3560 MHz	3575 MHz	3590 MHz

Test Mode	Bandwidth	TX / RX	RF Channel		
			Low (L)	Middle (M)	High (H)
LTE Band 43 (3600-3700)	5MHz	TX/RX	Channel 43615	Channel44090	Channel 44565
			3602.5 MHz	3650.0 MHz	3697.5 MHz
	10MHz	TX/RX	Channel 43640	Channel44090	Channel 44540
			3605.0 MHz	3650.0 MHz	3695.0 MHz
	15MHz	TX/RX	Channel 43665	Channel44090	Channel 44515
			3607.5 MHz	3650.0 MHz	3692.5 MHz
	20MHz	TX/RX	Channel 43690	Channel44090	Channel 44490
			3610 MHz	3650.0 MHz	3690.0 MHz

Test Mode	Bandwidth	TX / RX	RF Channel		
			Low (L)	Middle (M)	High (H)
LTE Band 48	5MHz	TX/RX	Channel 55265	Channel55990	Channel 56715
			3552.5 MHz	3625.0 MHz	3697.5 MHz
	10MHz	TX/RX	Channel 55290	Channel55990	Channel 56690
			3555.0 MHz	3625.0 MHz	3695.0 MHz
	15MHz	TX/RX	Channel 55315	Channel55990	Channel 56665
			3557.5 MHz	3625.0 MHz	3692.5 MHz
	20MHz	TX/RX	Channel 55340	Channel55990	Channel 56640
			3560.0 MHz	3625.0 MHz	3690.0 MHz

All rights reserved. Unless otherwise specified, no part of this report may be reproduced or utilized in any part, form or by any means, electronic or mechanical, including photocopying and microfilm, without permission in writing from TOWE.

2.2 Worst-case configuration and Mode

Test Mode	Description
TM 1	EUT communication with simulated station in LTE/QPSK mode
TM 2	EUT communication with simulated station in LTE/16QAM mode
TM 3	EUT communication with simulated station in LTE/64QAM mode
TM 4	EUT communication with simulated station in LTE/256QAM mode

2.3 Support Unit used in test

Description	Manufacturer	Model	Serial Number
Development Board*	QUECTEL	5G-M2-EVB	P1Y23F868000110
Remark: *the information is provided by applicant.			

2.4 Test Environment

Temperature:	Normal: 15℃ ~ 35℃, Extreme: -30℃ ~ +50℃
Relative Humidity	45-56 % RH Ambient
Voltage:	Nominal: 3.7 Vdc, Extreme: Low 3.135 Vdc, High 4.4 Vdc

2.5 Test RF Cable

For all conducted test items: The offset level is set spectrum analyzer to compensate the RF cable loss and attenuator factor between RF conducted output port and spectrum analyzer. With the offset compensation, the spectrum analyzer reading level will be exactly the RF output level.
The spectrum analyzer offset is derived from RF cable loss and attenuator factor.
Offset = RF cable loss + attenuator factor.

2.6 Modifications

No modifications were made during testing.

All rights reserved. Unless otherwise specified, no part of this report may be reproduced or utilized in any part, form or by any means, electronic or mechanical, including photocopying and microfilm, without permission in writing from TOWE.

2.7 Test Setup Diagram

2.7.1 Conducted Configuration

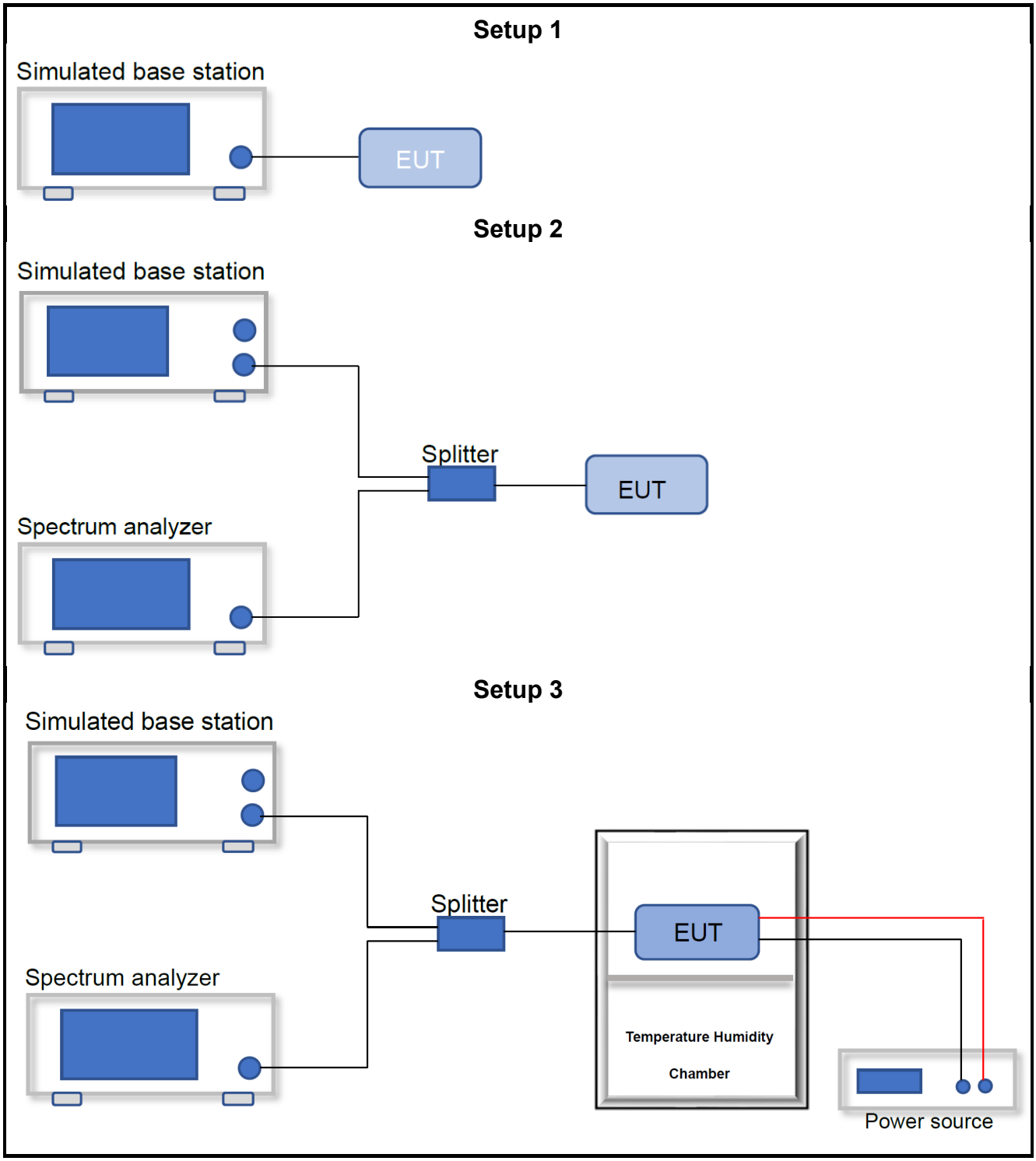

All rights reserved. Unless otherwise specified, no part of this report may be reproduced or utilized in any part, form or by any means, electronic or mechanical, including photocopying and microfilm, without permission in writing from TOWE.

2.7.2 Radiated Configuration

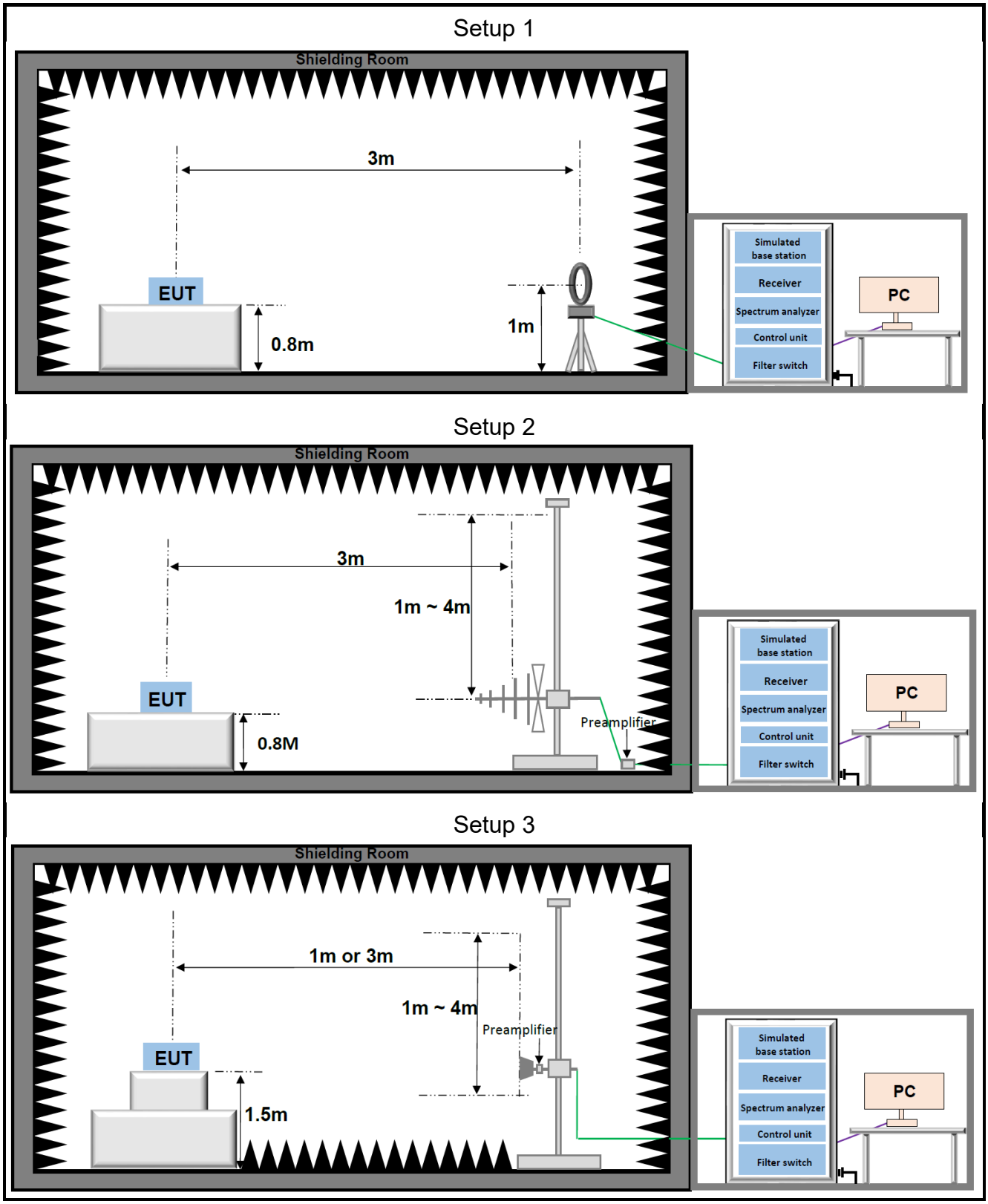

All rights reserved. Unless otherwise specified, no part of this report may be reproduced or utilized in any part, form or by any means, electronic or mechanical, including photocopying and microfilm, without permission in writing from TOWE.

3 Equipment and Measurement Uncertainty

All test and measuring equipment utilized to perform the tests documented in this report are calibrated on a regular basis, whichever is less, and where applicable is traceable recognized national standards.

3.1 Test Equipment List

RF Conducted 02					
Description	**Manufacturer**	**Model**	**S.N.**	**Last Due**	**Cal Due**
Signal Analyzer	Keysight	N9020A	MY53280106	2024/04/09	2025/04/08
				2025/03/11	2026/03/10
EXG X-Series Microwave Analog Signal Generator	Keysight	N5173B	MY62220561	2024/05/30	2025/05/29
Radio Communication Test Station	Anritsu	MT8000A	6262036781	2024/11/04	2025/11/03
Power Divider	Qotana	DBPD0200001800C	22122900036	2023/04/08	2025/04/07
				2025/03/11	2027/03/10
Hygrometer	BingYu	HTC-1	N/A	2023/06/01	2025/05/31
EXA Signal Analyzer, Multi-touch	Keysight	N9010B	MY63440541	2024/05/30	2025/05/29
5G NR Basestation	StartPoint	SP9500-CTS	SP20676	2024/03/25	2025/03/24
				2025/03/11	2026/03/10
Band Reject Filter Group	Tonscend	JS0806-F	23C806F0669	N/A	N/A
RF Control Unit	Tonscend	JS0806-1	22L8060651	N/A	N/A
Measurement Software	Tonscend	TS1120 V3.1.46	10636	N/A	N/A

All rights reserved. Unless otherwise specified, no part of this report may be reproduced or utilized in any part, form or by any means, electronic or mechanical, including photocopying and microfilm, without permission in writing from TOWE.

Radiated Emission					
Description	**Manufacturer**	**Model**	**S.N.**	**Last Due**	**Cal Due**
Biconic Logarithmic Periodic Antennas	Schwarzbeck	VULB9163	1643	2023/06/25	2025/06/24
Double-Ridged Horn Antennas	Schwarzbeck	BBHA 9120D	2809	2023/06/25	2025/06/24
Broad-Band Horn Antenna	Schwarzbeck	BBHA 9170	1290	2023/06/25	2025/06/24
Loop Antenna	Schwarzbeck	FMZB 1519C	1519C-028	2023/06/29	2025/06/28
Signal Analyzer	Keysight	N9020A	MY49100252	2024/03/25	2025/03/24
				2025/03/11	2026/03/10
EXA Signal Analyzer, Multi-touch	Keysight	N9010B	MY63440541	2024/05/30	2025/05/29
Wideband Radio Communication Tester	R&S	CMW500	150645	2024/03/25	2025/03/24
				2025/03/11	2026/03/10
Low Noise Amplifier	Tonscend	TAP9K3G40	AP23A8060273	2023/04/08	2025/04/07
				2025/03/11	2027/03/10
Low Noise Amplifier	Tonscend	TAP01018050	AP22G806258	2023/04/08	2025/04/07
				2025/03/11	2027/03/10
Low Noise Amplifier	Tonscend	TAP18040048	AP22G806247	2023/04/08	2025/04/07
				2025/03/11	2027/03/10
Hygrometer	BINGYU	HTC-1	N/A	2023/06/01	2025/05/31
Test Software	Tonscend	TS+	Version: 5.0.0	N/A	N/A

All rights reserved. Unless otherwise specified, no part of this report may be reproduced or utilized in any part, form or by any means, electronic or mechanical, including photocopying and microfilm, without permission in writing from TOWE.

3.2 Measurement Uncertainty

Parameter	U_{lab}
Frequency error	50.30Hz
Output Power	0.76dB
Conducted spurious emissions	2.22dB
Radiated Emissions(9kHz~30MHz)	2.40dB
Radiated Emissions(30MHz~1000MHz)	4.66dB
Radiated Emissions(1GHz~18GHz)	5.42dB
Radiated Emissions(18GHz~40GHz)	5.46dB

Uncertainty figures are valid to a confidence level of 95%

All rights reserved. Unless otherwise specified, no part of this report may be reproduced or utilized in any part, form or by any means, electronic or mechanical, including photocopying and microfilm, without permission in writing from TOWE.

4 Test Results

4.1 Maximum EIRP and Maximum PSD

Limits

FCC Part	Test Band	Limit		
§96.41	LTE Band 42/43/48	**Device**	**Maximum EIRP (dBm/10 megahertz)**	**Maximum PSD (dBm/MHz)**
		End User Device	23	n/a
		Category A CBSD	30	20
		Category B CBSD[1]	47	37

Test Procedure

KDB 971168 D01 V03r01 Section 5.4

Test Settings

1. Set span to 2 × to 3 × the OBW.
2. Set RBW = 1% to 5% of the OBW.
3. Set VBW ≥ 3 × RBW.
4. Set number of measurement points in sweep ≥ 2 × span / RBW.
5. Sweep time:
   a) Set = auto-couple, or
   b) Set ≥ [10 × (number of points in sweep) × (transmission symbol period)] for single sweep (automation-compatible) measurement.
6. Detector = power averaging (rms).
7. Set sweep trigger to “free run.”
8. Trace average at least 100 traces in power averaging (rms) mode if sweep is set to auto-couple. To accurately determine the average power over the on and off time of the transmitter, it can be necessary to increase the number of traces to be averaged above 100, or if using a manually configured sweep time, increase the sweep time.
9. Compute power by integrating the spectrum across the OBW of the signal using the instrument’s band or channel power measurement function with band/channel limits set equal to the OBW band edges. If the instrument does not have a band or channel power function, sum the spectrum levels (in linear power units) at intervals equal to the RBW extending across the entire OBW of the spectrum.
10. Add 10 log (1/duty cycle) to the measured power level to compute the average power during continuous transmission. For example, add [10 log (1/0.25)] = 6 dB if the duty cycle is a constant 25%.

Test notes

1. When average PSD limits are specified, the same fundamental measurement condition applies as previously discussed (i.e., averaging is to be performed only over durations of active transmissions at maximum output power level). Thus, when performing this measurement, the EUT must either be configured to transmit continuously at full power while the compliance measurement is performed, or else the measurement instrumentation must be configured to acquire data only over durations when the EUT is actively transmitting at full power. In circumstances where neither of these conditions can be realized, then alternative procedures are provided for both constant duty cycle and non-constant duty cycle transmissions.
2. The PSD is measured following the same procedures described in 5.2.4.4 for measuring the total average power, but with the RBW set to the reference bandwidth specified by the applicable regulatory requirement, and by using the marker function to identify the maximum PSD instead of summing the power across the OBW. If the fundamental measurement condition cannot be realized, then one of the alternative procedures in 5.2.4.4.2 or 5.2.4.4.3 should be selected.

All rights reserved. Unless otherwise specified, no part of this report may be reproduced or utilized in any part, form or by any means, electronic or mechanical, including photocopying and microfilm, without permission in writing from TOWE.

Test Setup

Refer to section 2.7.1 Setup 2

Measuring Instruments

The measuring equipment is listed in the section 3.1 of this test report.

Test Result

The detailed test data see: **Appendix.**

All rights reserved. Unless otherwise specified, no part of this report may be reproduced or utilized in any part, form or by any means, electronic or mechanical, including photocopying and microfilm, without permission in writing from TOWE.

4.2 Peak-Average Ratio

Limits

§96.41: The peak-to-average ratio (PAR) of the transmission may not exceed 13 dB.

Test Procedure

FCC KDB 971168 D01 V03r01 Section 5.7.1

Test Settings

The following guidelines are offered for performing a CCDF measurement.

11. Set resolution/measurement bandwidth ≥ OBW or specified reference bandwidth.
12. Set the number of counts to a value that stabilizes the measured CCDF curve.
13. Set the measurement interval as follows:
    a) For continuous transmissions, set to the greater of [10 × (number of points in sweep) × (transmission symbol period)] or 1 ms.
    b) For burst transmissions, employ an external trigger that is synchronized with the EUT burst timing sequence, or use the internal burst trigger with a trigger level that allows the burst to stabilize. Set the measurement interval to a time that is less than or equal to the burst duration.
    c) If there are several carriers in a single antenna port, the peak power shall be determined for each individual carrier (by disabling the other carriers while measuring the required carrier) and the total peak power calculated from the sum of the individual carrier peak powers.
14. Record the maximum PAPR level associated with a probability of 0.1%.
15. The peak power level is calculated form the sum of the PAPR value from step d) to the measured average power.

Test Setup

Refer to section 2.7.1 Setup 2

Measuring Instruments

The measuring equipment is listed in the section 3.1 of this test report.

Test Result

The detailed test data see: **Appendix.**

All rights reserved. Unless otherwise specified, no part of this report may be reproduced or utilized in any part, form or by any means, electronic or mechanical, including photocopying and microfilm, without permission in writing from TOWE.

4.3 Occupied Bandwidth

Limits

For Reporting Purposes only

Test Procedure

FCC KDB 971168 D01 V03r01 Section 4.2 & 4.3

Test Settings

1. The transmitter output was connected to a calibrated coaxial cable and coupler, The other end is connected to the spectrum analyzer and simulated station.
2. The signal analyzer automatic bandwidth measurement capability was used to perform the 99% occupied bandwidth and the 26dB bandwidth. The bandwidth measurement was not influenced by ant intermediate power nulls in the fundamental emission.
3. The simulated base station was set to force the EUT to its maximum power setting.
4. RBW = 1 - 5% of the expected OBW
5. VBW = 3 times the RBW
6. Sweep = Auto
7. Detector = Peak
8. Trace = Max hold
9. The trace was allowed to stabilize

Test Setup

Refer to section 2.7.1 Setup 2

Measuring Instruments

The measuring equipment is listed in the section 3.1 of this test report.

Test Result

The detailed test data see: **Appendix.**

All rights reserved. Unless otherwise specified, no part of this report may be reproduced or utilized in any part, form or by any means, electronic or mechanical, including photocopying and microfilm, without permission in writing from TOWE.

4.4 Band Edge and Emission Mask

Limits

FCC part	Test Band	Limit
§96.41	LTE Band 42/43/48	for channel and frequency assignments made by the SAS to CBSDs, the conducted power of any emission outside the fundamental emission (whether in or outside of the authorized band) shall not exceed −13 dBm/MHz within 0-10 megahertz above the upper SAS-assigned channel edge and within 0-10 megahertz below the lower SAS-assigned channel edge.

Test Procedure

FCC KDB 971168 D01 V03r01 Section 6.0

Test Settings

1. The transmitter output was connected to a calibrated coaxial cable and coupler, The other end is connected to the spectrum analyzer and simulated station.
2. The simulated base station was set to force the EUT to its maximum power setting.
3. Start and stop frequency were set such that the band edge would be placed in the center of the plot.
4. RBW ≥ 1% of the emission bandwidth
5. VBW ≥ 3 times the RBW
6. Detector = RMS
7. Number of sweep point ≥ 2 times Span/RBW
8. Sweep = Auto
9. Trace = Max hold
10. The trace was allowed to stabilize

Test Setup

Refer to section 2.7.1. Setup 2

Measuring Instruments

The measuring equipment is listed in the section 3.1 of this test report.

Test Result

The detailed test data see: **Appendix.**

All rights reserved. Unless otherwise specified, no part of this report may be reproduced or utilized in any part, form or by any means, electronic or mechanical, including photocopying and microfilm, without permission in writing from TOWE.

4.5 Spurious Emission at Antenna Terminals

Limits

FCC part	Test Band	Limit
§96.41	LTE Band 42/43/48	for channel and frequency assignments made by the SAS to CBSDs, the conducted power of any emission outside the fundamental emission (whether in or outside of the authorized band) shall not exceed −13 dBm/MHz within 0-10 megahertz above the upper SAS-assigned channel edge and within 0-10 megahertz below the lower SAS-assigned channel edge. At all frequencies greater than 10 megahertz above the upper SAS assigned channel edge and less than 10 MHz below the lower SAS assigned channel edge, the conducted power of any emission shall not exceed −25 dBm/MHz. (2) Additional protection levels. Notwithstanding paragraph (d)(1) of this section, the conducted power of any emissions below 3530 MHz or above 3720 MHz shall not exceed −40dBm/MHz.

Test Procedure

FCC KDB 971168 D01 V03r01 Section 6.0

Test Settings

1. The transmitter output was connected to a calibrated coaxial cable and coupler, The other end is connected to the spectrum analyzer and simulated station.
2. The simulated base station was set to force the EUT to its maximum power setting.
3. Start frequency was set to 9kHz and stop frequency was set to 10th harmonic.
4. RBW and VBW (see test notes)
5. Detector = RMS
6. Sweep = Auto
7. Trace = trace average for continuous emissions, max hold for pulse emissions
8. Allow trace to fully stabilize

Test Notes

1. Compliance with the applicable limits is based on the use of measurement instrumentation employing a resolution bandwidth 100kHz or greater for measurements below 1GHz. However, in the 1MHz bands immediately outside and adjacent to the frequency block a resolution bandwidth of at least one percent of the emission bandwidth of the fundamental emission of the transmitter may be employed. The emission bandwidth is defined as the width of the signal between two points, one below the carrier center frequency and one above the carrier center frequency, outside of which all emission is attenuated at least 26dB below the transmitter power
2. 9kHz – 150kHz: RBW=1kHz, VBW≥3 times the RBW
3. 150kHz – 30MHz: RBW=10kHz, VBW≥3 times the RBW

Test Setup

Refer to section 2.7.1. Setup 2

Measuring Instruments

The measuring equipment is listed in the section 3.1 of this test report.

Test Result

The detailed test data see: **Appendix.**

All rights reserved. Unless otherwise specified, no part of this report may be reproduced or utilized in any part, form or by any means, electronic or mechanical, including photocopying and microfilm, without permission in writing from TOWE.

4.6 Field Strength of Spurious Radiation

Limits

FCC part	Test Band	Limit
§96.41	LTE Band 42/43/48	for channel and frequency assignments made by the SAS to CBSDs, the conducted power of any emission outside the fundamental emission (whether in or outside of the authorized band) shall not exceed −13 dBm/MHz within 0-10 megahertz above the upper SAS-assigned channel edge and within 0-10 megahertz below the lower SAS-assigned channel edge. At all frequencies greater than 10 megahertz above the upper SAS assigned channel edge and less than 10 MHz below the lower SAS assigned channel edge, the conducted power of any emission shall not exceed −25 dBm/MHz. (2) Additional protection levels. Notwithstanding paragraph (d)(1) of this section, the conducted power of any emissions below 3530 MHz or above 3720 MHz shall not exceed −40dBm/MHz.

Test Procedure

FCC KDB 971168 D01 V03r01 Section 7

Test Settings

1. For radiated emissions measurements performed at frequencies less than or equal to 1GHz, the EUT shall be placed on a RF-transparent table or support at a nominal height of 80cm above the reference ground plane.
2. For radiated emissions measurements performed at frequencies above 1GHz, the EUT shall be placed on a RF-transparent table or support at a nominal height of 80cm above the ground plane.
3. Radiated measurements shall be made with the measurement antenna positioned in both horizontal and vertical polarization. The measurement antenna shall be varied from 1m to 4m in height above the reference ground in a search for the relative positioning that produces the maximum radiated signal level (i.e, field strength or received power), when orienting the measurement antenna in vertical polarization, the minimum height of the lowest element of the antenna shall clear the site reference ground plane by at least 25cm.
4. For each suspected emission, the EUT was ranged its worst case and then tune the antenna tower(from 1~4m) and turntable(from 0~360°) find the maximum reading. Preamplifier and a high pass filter are used for the test in order get better signal level comply with the guidelines.
5. The simulated base station was set to force the EUT to its maximum transmitting power.
6. spectrum analyzer setting:
   Measurements 9kHz~150kHz: RBW = 300Hz; VBW ≥ 3 kHz; Detector = RMS
   Measurements 150kHz~30MHz: RBW = 10kHz; VBW ≥ 30 kHz; Detector = RMS
   Measurements 30MHz~1000MHz: RBW = 100kHz or 1MHz; VBW ≥ 1MHz or 3MHz; Detector = RMS
   Measurements Above 1000MHz: RBW = 1 MHz; VBW ≥ 3 MHz; Detector = RMS
7. The field strength is calculated by adding the Antenna Factor, Cable Factor. The basic equation with a sample calculation is as follows:
   E(dBμV/m) = Measured amplitude level (dBμV) + Cable Loss (dB) + Antenna Factor (dB/m).
   E(dBμV/m) = Measured amplitude level (dBm) + 107 + Cable Loss (dB) + Antenna Factor (dB/m).
   E(dBuV/m) = EIRP(dBm) - 20log(D) + 104.8; where D is the measurement distance(in the far field region) in m.
   EIRP(dBm) = E(dBμV/m) + 20log(D) - 104.8; where D is the measurement distance(in the far field region) in m.
   *So, from d: The measuring distance is usually at 3m, then 20*Log(3)=9.5424*
   Then, EIRP (dBm)= E (dBμV/m) +9.5424-104.8=E (dBμV/m)-95.2576
8. Repeat above procedures until all frequencies measured was complete.
9. Measure and record the results in the test report.

All rights reserved. Unless otherwise specified, no part of this report may be reproduced or utilized in any part, form or by any means, electronic or mechanical, including photocopying and microfilm, without permission in writing from TOWE.

Test notes

1. The EUT was tested in three orthogonal planes and in all possible test configurations and positioning. The worst-case emissions are reported with the EUT positioning, modulations, RB sizes and offsets, and channel bandwidth configurations shown in the tables below.
2. Emissions below 18GHz were measured at a 3-meter test distance while emissions above 18GHz were measured at a 1-meter test distance with the application of a distance correction factor.
3. Radiated spurious emissions were investigated from 9kHz to 30MHz, 30MHz-1GHz and above 1GHz. the disturbance between 9kHz to 30MHz, 30MHz-1GHz and 18GHz to 40GHz was very low. The amplitude of spurious emissions from the radiator which are attenuated more than 20dB below the limit need not be recorded, so only the harmonics had been displayed.
4. The "-" shown in the following RSE tables are used to denote a noise floor measurement.

Test Setup

Refer to section 2.7.2 for details.

Measuring Instruments

The measuring equipment is listed in the section 3.1 of this test report.

Test Result

The detailed test data see: **Appendix.**

All rights reserved. Unless otherwise specified, no part of this report may be reproduced or utilized in any part, form or by any means, electronic or mechanical, including photocopying and microfilm, without permission in writing from TOWE.

4.7 Frequency Stability V.S. Temperature, Voltage

Limits

§96.41:
The frequency stability shall be sufficient to ensure that the fundamental emission stays within the authorized frequency block.

Test Procedure

FCC KDB 971168 D01 V03r01 Section 9

Test Settings

1. The carrier frequency of the transmitter is measured at room temperature (20°C to provide a reference).
2. The equipment is turned on in a "standby" condition for fifteen minutes before applying power to the transmitter. Measurement of the carrier frequency of the transmitter is made within one minute after applying power to the transmitter.
3. Frequency measurements are made at 10°C intervals ranging from -30°C to +50°C. A period of at least one half-hour is provided to allow stabilization of the equipment at each temperature level.

Test Notes

a.) Temperature:
The temperature is varied from -30°C to +50°C in 10°C increments using an environmental chamber.
b.) Primary Supply Voltage:
The primary supply voltage is varied from 85% to 115% of the nominal value for non hand-carried battery and AC powered equipment. For hand-carried, battery-powered equipment, primary supply voltage is reduced to the battery operating end point which shall be specified by the manufacturer.

Test Setup

Refer to section 2.7.1 Setup 3

Measuring Instruments

The measuring equipment is listed in the section 3.1 of this test report.

Test Result

The detailed test data see: **Appendix.**

All rights reserved. Unless otherwise specified, no part of this report may be reproduced or utilized in any part, form or by any means, electronic or mechanical, including photocopying and microfilm, without permission in writing from TOWE.

5 Test Setup Photos

The detailed test data see: **Appendix-D WWAN Setup Photos**

All rights reserved. Unless otherwise specified, no part of this report may be reproduced or utilized in any part, form or by any means, electronic or mechanical, including photocopying and microfilm, without permission in writing from TOWE.

Appendix

Appendix List:

Appendix-A LTE Band 48
Appendix-C Field Strength of Spurious Radiation-LTE

~The End~

All rights reserved. Unless otherwise specified, no part of this report may be reproduced or utilized in any part, form or by any means, electronic or mechanical, including photocopying and microfilm, without permission in writing from TOWE.