TEST REPORT

Applicant:	Quectel Wireless Solutions Co., Ltd.
EUT Description:	5G RedCap Sub-6 GHz Module
Model No:	RG255G-GL
Brand:	QUECTEL
FCC ID:	XMR2026RG255GGL
Standards:	CFR 47, FCC Part 2; CFR 47, FCC Part 22 CFR 47, FCC Part 24; CFR 47, FCC Part 27; CFR 47, FCC Part 90
Date of Receipt:	2026/03/19
Date of Test:	2026/03/19 to 2026/06/16
Date of Issue:	2026/06/16

TOWE tested the above equipment in accordance with the requirements set forth in the above standards. The test results show that the equipment tested is capable of demonstrating compliance with the requirements as documented in this report.

The results documented in this report apply only to the tested sample, under the conditions and modes of operation as described herein. It is the manufacturer's responsibility to assure that additional production units of the model are manufactured with identical electrical and mechanical components. All samples tested were in good operating condition throughout the entire test program. Measurement Uncertainties are published for informational purposes only and were not taken into account unless noted otherwise. Without written approval of TOWE, the test report shall not be reproduced except in full.

CFR 47, FCC Part 2 is a general rules and regulations document rather than a testing standard, and as such falls outside the scope of A2LA accreditation. All other FCC standards referenced in this report are within the laboratory's accredited scope.

ACCREDITED
CERTIFICATE #7088.01

Jim Huang
Approved By:

Carey Chen
Reviewed By:

All rights reserved. Unless otherwise specified, no part of this report may be reproduced or utilized in any part, form or by any means, electronic or mechanical, including photocopying and microfilm, without permission in writing from TOWE.

Revision History

Rev.	Issue Date	Description	Revised by
01	2026/06/16	Original	Carey Chen

All rights reserved. Unless otherwise specified, no part of this report may be reproduced or utilized in any part, form or by any means, electronic or mechanical, including photocopying and microfilm, without permission in writing from TOWE.

Summary of Test Results

FCC Part	Test Band	Test Item	Test Result
§2.1046, §22.913(a)(5) §27.50(c)(10) §90.542(a) §27.50(b)(9)	NR Band n5/ NR Band n26(824~849 MHz) NR Band n12/71/85 NR Band n14 NR Band n13	Effective Radiated Power	Pass
§2.1046, §27.50(h)(2) §24.232(c) §27.50(d)(4) §27.50(k)(3) §27.50(j)(3)	NR Band n7/ NR Band n38/ NR Band n41 NR Band n2/ NR Band n25 NR Band n66 NR Band n77/n78(3450-3550MHz) NR Band n77/n78(3700-3980MHz)	Effective Isotropic Radiated Power	Pass
§27.50(a)(3)	NR Band n30	Maximum EIRP and Maximum PSD	Pass
§2.1046, §90.635(b)	NR Band n26(814~824 MHz)	Transmitter Conducted Power Output	Pass
§22.913(d) §24.232(d) §27.50(d)(5)	NR Band n5/ NR Band n26(824~849 MHz) NR Band n2/ NR Band n25 Others NR Band	Peak-Average Ratio	Pass
§2.1049	All NR Band	Occupied Bandwidth	Pass
§2.1051 §90.210(b) § 90.691(a)	NR Band n14 NR Band n26(814~824 MHz)	Emission Mask	Pass
§2.1051 §22.917(a) §27.53(m4) §24.238(a) §27.53(g) §27.53(c) §90.543(e)(2)(3) §27.53(a)(4) §27.53(h) §27.50(n)(2) §27.53(l)(2)	NR Band n5/ NR Band n26(824~849 MHz) NR Band n7/ NR Band n38/ NR Band n41 NR Band n2/ NR Band n25 NR Band n12/71/85 NR Band n13 NR Band n14 NR Band n30 NR Band n66 NR Band n77/n78(3450-3550MHz) NR Band n77/n78(3700-3980MHz)	Band Edge	Pass
§2.1051 §22.917(a) §27.53(m) §24.238(a) §27.53(g) §27.53(c)(f) §90.543(c)(f) §90.691 §27.53(a)(4) §27.53(h) §27.50(n)(2) §27.53(l)(2)	NR Band n5/ NR Band n26(824~849 MHz) NR Band n7/ NR Band n38/ NR Band n41 NR Band n2/ NR Band n25 NR Band n12/71/85 NR Band n13 NR Band n14 NR Band n26(814~824 MHz) NR Band n30 NR Band n66 NR Band n77/n78(3450-3550MHz) NR Band n77/n78(3700-3980MHz)	Spurious Emission at Antenna Terminals	Pass
§2.1051 §22.917(a) §27.53(m) §24.238(a) §27.53(g) §27.53(c)(f) §90.543(c)(f) §90.691 §27.53(a)(4) §27.53(h) §27.50(n)(2) §27.53(l)(2)	NR Band n5/ NR Band n26(824~849 MHz) NR Band n7/ NR Band n38/ NR Band n41 NR Band n2/ NR Band n25 NR Band n12/71/85 NR Band n13 NR Band n14 NR Band n26(814~824 MHz) NR Band n30 NR Band n66 NR Band n77/n78(3450-3550MHz) NR Band n77/n78(3700-3980MHz)	Field Strength of Spurious Radiation	Pass

All rights reserved. Unless otherwise specified, no part of this report may be reproduced or utilized in any part, form or by any means, electronic or mechanical, including photocopying and microfilm, without permission in writing from TOWE.

FCC Part	Test Band	Test Item	Test Result
§2.1055 §22.355 §24.235 §27.54 §90.213	NR Band n5/ NR Band n26(824~849 MHz) NR Band n2/ NR Band n25 Others NR Band NR Band n14/NR Band n26(814~824 MHz)	Frequency Stability	Pass
Remark: Pass: Meet the requirement.			

All rights reserved. Unless otherwise specified, no part of this report may be reproduced or utilized in any part, form or by any means, electronic or mechanical, including photocopying and microfilm, without permission in writing from TOWE.

Table of Contents

1 General Description 6
1.1 Lab Information 6
1.1.1 Testing Location 6
1.1.2 Test Facility / Accreditations 6
1.2 Client Information 6
1.2.1 Applicant 6
1.2.2 Manufacturer 6
1.3 Product Information 7
2 Test Configuration 9
2.1 Test Channel 9
2.2 Worst-case configuration and Mode 14
2.3 Support Unit used in test 14
2.4 Test Environment 14
2.5 Test RF Cable 14
2.6 Modifications 14
2.7 Test Setup Diagram 15
2.7.1 Conducted Configuration 15
2.7.2 Radiated Configuration 16
3 Equipment and Measurement Uncertainty 17
3.1 Test Equipment List 17
3.2 Measurement Uncertainty 18
4 Test Results 19
4.1 Output Power(ERP / EIRP / Conducted Power) 19
4.2 Maximum EIRP and Maximum PSD 21
4.3 Peak-Average Ratio 23
4.4 Occupied Bandwidth 24
4.5 Band Edge and Emission Mask 25
4.6 Spurious Emission at Antenna Terminals 27
4.7 Field Strength of Spurious Radiation 28
4.8 Frequency Stability V.S. Temperature, Voltage 30
5 Test Setup Photos 31
Appendix 32

All rights reserved. Unless otherwise specified, no part of this report may be reproduced or utilized in any part, form or by any means, electronic or mechanical, including photocopying and microfilm, without permission in writing from TOWE.

1 General Description

1.1 Lab Information

1.1.1 Testing Location

These measurement tests were conducted at the Sushi TOWE Wireless Testing(Shenzhen) Co., Ltd. facility located at F401 and F101, Building E, Hongwei Industrial Zone, Liuxian 3rd Road, Bao'an District, Shenzhen, China. The measurement facility is compliant with the test site requirements specified in ANSI C63.4-2014
Tel.: +86-755-27212361
Contact Email: info@towewireless.com

1.1.2 Test Facility / Accreditations

A2LA (Certificate Number: 7088.01)
This laboratory is accredited in accordance with the recognized International Standard ISO/IEC 17025:2017 General requirements for the competence of testing and calibration laboratories. This accreditation demonstrates technical competence for a defined scope and the operation of a laboratory quality management system (refer to joint ISO-ILAC-IAF Communiqué dated April 2017).

FCC Designation No.: CN1353
Sushi TOWE Wireless Testing(Shenzhen) Co., Ltd. has been recognized as an accredited testing laboratory.
Test Firm Registration Number: 684095
Designation Number: CN1353.

ISED CAB identifier: CN0152
Sushi TOWE Wireless Testing(Shenzhen) Co., Ltd. has been recognized by ISED as an accredited testing laboratory.
CAB identifier: CN0152
Company Number: 31000

1.2 Client Information

1.2.1 Applicant

Applicant:	Quectel Wireless Solutions Co., Ltd.
Address:	No. 8 Waipojing Road, Sijing Town, Songjiang District, Shanghai 201601, China

1.2.2 Manufacturer

Manufacturer:	Quectel Wireless Solutions Co., Ltd.
Address:	No. 8 Waipojing Road, Sijing Town, Songjiang District, Shanghai 201601, China

All rights reserved. Unless otherwise specified, no part of this report may be reproduced or utilized in any part, form or by any means, electronic or mechanical, including photocopying and microfilm, without permission in writing from TOWE.

1.3 Product Information

EUT Description:	5G RedCap Sub-6 GHz Module		
Model No:	RG255G-GL		
Brand:	QUECTEL		
Hardware Version:	R1.0		
Software Version:	RG255GGL00ACR01A04M21 (with GNSS) RG255GGL00ABR01A04M21 (without GNSS)		
NR Specification:	☒ RedCap ☐V2X		
IMEI:	RF Conducted	866605070025407	
	RSE	866605070024630	
Technical specification:			
Operation Frequency Range:	Band	TX Frequency	RX Frequency
	NR Band n2	1850 to 1910 MHz	1930 to 1990 MHz
	NR Band n5	824 to 849 MHz	869 to 894 MHz
	NR Band n7	2500 to 2570 MHz	2620 to 2690 MHz
	NR Band n12	699 to 716 MHz	729 to 746 MHz
	NR Band n13	777 to 787 MHz	746 to 756 MHz
	NR Band n14	788 to 798 MHz	758 to 768 MHz
	NR Band n25	1850 to 1915MHz	1930 to 1995 MHz
	NR Band n26 (814 to 824 MHz)	814 to 824MHz	859 to 869 MHz
	NR Band n26 (824 to 849 MHz)	824 to 849 MHz	869 to 894 MHz
	NR Band n30	2305 to 2315 MHz	2350 to 2360 MHz
	NR Band n38	2570 to 2620 MHz	2570 to 2620 MHz
	NR Band n41	2496 to 2690 MHz	2496 to 2690 MHz
	NR Band n66	1710 to 1780 MHz	2110 to 2180 MHz
	NR Band n71	663 to 698 MHz	617 to 652 MHz
	NR Band n77*	3450 to 3550 MHz	3450 to 3550 MHz
		3700 to 3980 MHz	3700 to 3980 MHz
	NR Band n78*	3450 to 3550 MHz	3450 to 3550 MHz
		3700 to 3800 MHz	3700 to 3800 MHz
	NR Band n85	698 ~ 716 MHz	728 ~ 746 MHz
	Note*: The frequency range of NR Band n77 covers the frequency range of NR Band n78, so NR Band n78 only test the items of Power.		
Type of Modulation:	☒ DFT-s-OFDM:	Pi/2-BPSK, QPSK, 16-QAM, 64-QAM, 256-QAM	
	☒ CP-OFDM:	QPSK, 16-QAM, 64-QAM, 256-QAM	
Power Class:	Class 2: NR Band 77; NR Band 78; Class 3: All		
Antenna Type:	☒ External, ☐ Integrated		
Antenna Gain:	Band	Ant (dBi)	
	NR Band n2	1.8	

All rights reserved. Unless otherwise specified, no part of this report may be reproduced or utilized in any part, form or by any means, electronic or mechanical, including photocopying and microfilm, without permission in writing from TOWE.

	NR Band n5	0.3
	NR Band n7	1.4
	NR Band n12	-0.5
	NR Band n13	-0.7
	NR Band n14	-0.5
	NR Band n25	1.8
	NR Band n26	0.3
	NR Band n30	0.98
	NR Band n38	1.4
	NR Band n41	1.4
	NR Band n66	1.5
	NR Band n71	-0.9
	NR Band n77 (3450 to 3550 MHz)	0.08
	NR Band n77 (3700 to 3980 MHz)	1.26
	NR Band n78 (3450 to 3550 MHz)	0.08
	NR Band n78 (3700 to 3800 MHz)	1.26
	NR Band n85	-0.5

Remark:
1. The above EUT's information was declared by applicant, please refer to the specifications or user manual for more detailed description.
2. For RG255G-GL project, there are two versions, one is the with GNSS version, the other is without GNSS version. Please refer to the Statement provided by the client for specific differences.

All rights reserved. Unless otherwise specified, no part of this report may be reproduced or utilized in any part, form or by any means, electronic or mechanical, including photocopying and microfilm, without permission in writing from TOWE.

2 Test Configuration

2.1 Test Channel

5G NR Band n2 and SCS 15 kHz						
Bandwidth	TX Frequency			RX Frequency		
	Range	Carrier centre (ARFCN)	Carrier centre (MHz)	Range	Carrier centre (ARFCN)	Carrier centre (MHz)
5MHz	Low	370500	1852.5	Low	386500	1932.5
	Middle	376000	1880	Middle	392000	1960
	High	381500	1907.5	High	397500	1987.5
10MHz	Low	371000	1855	Low	387000	1935
	Middle	376000	1880	Middle	392000	1960
	High	381000	1905	High	397000	1985
15MHz	Low	371500	1857.5	Low	387500	1937.5
	Middle	376000	1880	Middle	392000	1960
	High	380500	1902.5	High	396500	1982.5
20MHz	Low	372000	1860	Low	388000	1940
	Middle	376000	1880	Middle	392000	1960
	High	380000	1900	High	396000	1980

5G NR Band n5 and SCS 15 kHz						
Bandwidth	TX Frequency			RX Frequency		
	Range	Carrier centre (ARFCN)	Carrier centre (MHz)	Range	Carrier centre (ARFCN)	Carrier centre (MHz)
5MHz	Low	165300	826.5	Low	174300	871.5
	Middle	167300	836.5	Middle	176300	881.5
	High	169300	846.5	High	178300	891.5
10MHz	Low	165800	829	Low	174800	874
	Middle	167300	836.5	Middle	176300	881.5
	High	168800	844	High	177800	889
15MHz	Low	166300	831.5	Low	175300	876.5
	Middle	167300	836.5	Middle	176300	881.5
	High	168300	841.5	High	177300	886.5
20MHz	Low	166800	834	Low	175800	879
	Middle	167300	836.5	Middle	176300	881.5
	High	167800	839	High	176800	884

5G NR Band n7 and SCS 15 kHz						
Bandwidth	TX Frequency			RX Frequency		
	Range	Carrier centre (ARFCN)	Carrier centre (MHz)	Range	Carrier centre (ARFCN)	Carrier centre (MHz)
5MHz	Low	500500	2502.5	Low	524500	2622.5
	Middle	507000	2535	Middle	531000	2655
	High	513500	2567.5	High	537500	2687.5
10MHz	Low	501000	2505	Low	525000	2625
	Middle	507000	2535	Middle	531000	2655
	High	513000	2565	High	537000	2685
15MHz	Low	501500	2507.5	Low	525500	2627.5
	Middle	507000	2535	Middle	531000	2655
	High	512500	2562.5	High	536500	2682.5
20MHz	Low	502000	2510	Low	526000	2630
	Middle	507000	2535	Middle	531000	2655
	High	512000	2560	High	536000	2680

All rights reserved. Unless otherwise specified, no part of this report may be reproduced or utilized in any part, form or by any means, electronic or mechanical, including photocopying and microfilm, without permission in writing from TOWE.

5G NR Band n12 and SCS 15 kHz						
Bandwidth	TX Frequency			RX Frequency		
	Range	Carrier centre (ARFCN)	Carrier centre (MHz)	Range	Carrier centre (ARFCN)	Carrier centre (MHz)
5MHz	Low	140300	701.5	Low	146300	731.5
	Middle	141500	707.5	Middle	147500	737.5
	High	142700	713.5	High	148700	743.5
10MHz	Low	140800	704	Low	146800	734
	Middle	141500	707.5	Middle	147500	737.5
	High	142200	711	High	148200	741
15MHz	Low	141300	706.5	Low	147300	736.5
	Middle	141500	707.5	Middle	147500	737.5
	High	141700	708.5	High	147700	738.5

5G NR Band n13 and SCS 15 kHz						
Bandwidth	TX Frequency			RX Frequency		
	Range	Carrier centre (ARFCN)	Carrier centre (MHz)	Range	Carrier centre (ARFCN)	Carrier centre (MHz)
5MHz	Low	155900	779.5	Low	149700	748.5
	Middle	156400	782	Middle	150200	751
	High	156900	784.5	High	150700	753.5
10MHz	Low	156400	782	Low	150200	751
	Middle			Middle		
	High			High		

5G NR Band n14 and SCS 15 kHz						
Bandwidth	TX Frequency			RX Frequency		
	Range	Carrier centre (ARFCN)	Carrier centre (MHz)	Range	Carrier centre (ARFCN)	Carrier centre (MHz)
5MHz	Low	158100	790.5	Low	152100	760.5
	Middle	158600	793	Middle	152600	763
	High	159100	795.5	High	153100	765.5
10MHz	Low	158600	793	Low	152600	763
	Middle			Middle		
	High			High		

5G NR Band n25 and SCS 15 kHz						
Bandwidth	TX Frequency			RX Frequency		
	Range	Carrier centre (ARFCN)	Carrier centre (MHz)	Range	Carrier centre (ARFCN)	Carrier centre (MHz)
5MHz	Low	370500	1852.5	Low	386500	1932.5
	Middle	376500	1882.5	Middle	392500	1962.5
	High	382500	1912.5	High	398500	1992.5
10MHz	Low	371000	1855	Low	387000	1935
	Middle	376500	1882.5	Middle	392500	1962.5
	High	382000	1910	High	398000	1990
15MHz	Low	371500	1857.5	Low	387500	1937.5
	Middle	376500	1882.5	Middle	392500	1962.5
	High	381500	1907.5	High	397500	1987.5
20MHz	Low	372000	1860	Low	388000	1940
	Middle	376500	1882.5	Middle	392500	1962.5
	High	381000	1905	High	397000	1985

All rights reserved. Unless otherwise specified, no part of this report may be reproduced or utilized in any part, form or by any means, electronic or mechanical, including photocopying and microfilm, without permission in writing from TOWE.

5G NR Band n26(814~824MHz) and SCS 15 kHz						
Bandwidth	TX Frequency			RX Frequency		
	Range	Carrier centre (ARFCN)	Carrier centre (MHz)	Range	Carrier centre (ARFCN)	Carrier centre (MHz)
5MHz	Low	163300	816.5	Low	172300	861.5
	Middle	163800	819	Middle	172800	864
	High	164300	821.5	High	173300	866.5
10MHz	Low	163800	819	Low	172800	864
	Middle			Middle		
	High			High		

5G NR Band n26(824~849MHz) and SCS 15 kHz						
Bandwidth	TX Frequency			RX Frequency		
	Range	Carrier centre (ARFCN)	Carrier centre (MHz)	Range	Carrier centre (ARFCN)	Carrier centre (MHz)
5MHz	Low	165300	826.5	Low	174300	871.5
	Middle	167300	836.5	Middle	176300	881.5
	High	169300	846.5	High	178300	891.5
10MHz	Low	165800	829	Low	174800	874
	Middle	167300	836.5	Middle	176300	881.5
	High	168800	844	High	177800	889
15MHz	Low	166300	831.5	Low	175300	876.5
	Middle	167300	836.5	Middle	176300	881.5
	High	168300	841.5	High	177300	886.5
20MHz	Low	166800	834	Low	175800	879
	Middle	167300	836.5	Middle	176300	881.5
	High	167800	839	High	176800	884

5G NR Band n30 and SCS 15 kHz						
Bandwidth	TX Frequency			RX Frequency		
	Range	Carrier centre (ARFCN)	Carrier centre (MHz)	Range	Carrier centre (ARFCN)	Carrier centre (MHz)
5MHz	Low	461500	2307.5	Low	470500	2352.5
	Middle	462000	2310	Middle	471000	2355
	High	462500	2312.5	High	471500	2357.5
10MHz	Low	462000	2310	Low	471000	2355
	Middle	462000	2310	Middle	471000	2355
	High	462000	2310	High	471000	2355

5G NR Band n38, SCS 30 kHz and ΔF_{Raster} 30 kHz			
Bandwidth	TX & RX Frequency		
	Range	Carrier centre (ARFCN)	Carrier centre (MHz)
10MHz	Low	515000	2575
	Middle	519000	2595
	High	523000	2615
15MHz	Low	515500	2577.5
	Middle	519000	2595
	High	522500	2612.5
20MHz	Low	516000	2580
	Middle	519000	2595
	High	522000	2610

All rights reserved. Unless otherwise specified, no part of this report may be reproduced or utilized in any part, form or by any means, electronic or mechanical, including photocopying and microfilm, without permission in writing from TOWE.

5G NR Band n41, SCS 30 kHz and ΔF_{Raster} 30 kHz			
Bandwidth	TX & RX Frequency		
	Range	Carrier centre (ARFCN)	Carrier centre (MHz)
10MHz	Low	500202	2501.01
	Middle	518598	2592.99
	High	537000	2685
15MHz	Low	500700	2503.5
	Middle	518598	2592.99
	High	536496	2682.48
20MHz	Low	501204	2506.02
	Middle	518598	2592.99
	High	535998	2679.99

5G NR Band n66, SCS 15 kHz						
Bandwidth	TX Frequency			RX Frequency		
	Range	Carrier centre (ARFCN)	Carrier centre (MHz)	Range	Carrier centre (ARFCN)	Carrier centre (MHz)
5MHz	Low	435500	1712.5	Low	422500	2112.5
	Middle	342500	1745	Middle	429000	2145.0
	High	349000	1777.5	High	435500	2177.5
10MHz	Low	343000	1715	Low	423000	2115.0
	Middle	349000	1745	Middle	429000	2145.0
	High	355000	1775	High	435000	2175.0
15MHz	Low	343500	1717.5	Low	423500	2117.5
	Middle	349000	1745	Middle	429000	2145.0
	High	354500	1772.5	High	434500	2172.5
20MHz	Low	344000	1720	Low	424000	2120.0
	Middle	349000	1745	Middle	429000	2145.0
	High	354000	1770	High	434000	2170.0

5G NR Band n71, SCS 15 kHz						
Bandwidth	TX Frequency			RX Frequency		
	Range	Carrier centre (ARFCN)	Carrier centre (MHz)	Range	Carrier centre (ARFCN)	Carrier centre (MHz)
5MHz	Low	133100	665.5	Low	123900	619.5
	Middle	136100	680.5	Middle	126900	634.5
	High	139100	695.5	High	129900	649.5
10MHz	Low	133600	668	Low	124400	622
	Middle	136100	680.5	Middle	126900	634.5
	High	138600	693	High	129400	647
15MHz	Low	134100	670.5	Low	124900	624.5
	Middle	136100	680.5	Middle	126900	634.5
	High	138100	690.5	High	128900	644.5
20MHz	Low	134600	673	Low	125400	627
	Middle	136100	680.5	Middle	126900	634.5
	High	137600	688	High	128400	642

All rights reserved. Unless otherwise specified, no part of this report may be reproduced or utilized in any part, form or by any means, electronic or mechanical, including photocopying and microfilm, without permission in writing from TOWE.

5G NR Band n77/n78(3450~3550MHz), SCS 30 kHz and ΔF_{Raster} 30 kHz			
Bandwidth	TX & RX Frequency		
	Range	Carrier centre (ARFCN)	Carrier centre (MHz)
10MHz	Low	630334	3455.01
	Middle	633334	3500.01
	High	636334	3545.01
15MHz	Low	630500	3457.5
	Middle	633334	3500.01
	High	636166	3542.49
20MHz	Low	630668	3460.02
	Middle	633334	3500.01
	High	636000	3540

5G NR Band n77(3700~3980MHz), SCS 30 kHz and ΔF_{Raster} 30 kHz			
Bandwidth	TX & RX Frequency		
	Range	Carrier centre (ARFCN)	Carrier centre (MHz)
10MHz	Low	647000	3705
	Middle	656000	3840
	High	665000	3975
15MHz	Low	647168	3707.52
	Middle	656000	3840
	High	664832	3972.48
20MHz	Low	647334	3710.01
	Middle	656000	3840
	High	664666	3969.99

5G NR Band n78(3700~3800MHz), SCS 30 kHz and ΔFRaster 30 kHz			
Bandwidth	TX & RX Frequency		
	Range	Carrier centre (ARFCN)	Carrier centre (MHz)
10MHz	Low	647000	3705
	Middle	650000	3750
	High	653000	3795
15MHz	Low	647168	3707.52
	Middle	650000	3750
	High	652832	3792.48
20MHz	Low	647334	3710.01
	Middle	650000	3750
	High	652666	3789.99

5G NR Band n85, SCS 15 kHz						
Bandwidth	TX Frequency			RX Frequency		
	Range	Carrier centre (ARFCN)	Carrier centre (MHz)	Range	Carrier centre (ARFCN)	Carrier centre (MHz)
5MHz	Low	140100	700.5	Low	146100	730.5
	Middle	141400	707.0	Middle	147400	737.0
	High	142700	713.5	High	148700	743.5
10MHz	Low	140600	703.0	Low	146600	733.0
	Middle	141400	707.0	Middle	147400	737.0
	High	142200	711.0	High	148200	741.0
15MHz	Low	141100	705.5	Low	147100	735.5
	Middle	141400	707.0	Middle	147400	737.0
	High	141700	708.5	High	147700	738.5

All rights reserved. Unless otherwise specified, no part of this report may be reproduced or utilized in any part, form or by any means, electronic or mechanical, including photocopying and microfilm, without permission in writing from TOWE.

2.2 Worst-case configuration and Mode

Test Mode	Description
TM 1	EUT communication with simulated station in DFT-s-OFDM Pi/2-BPSK mode
TM 2	EUT communication with simulated station in DFT-s-OFDM QPSK mode
TM 3	EUT communication with simulated station in DFT-s-OFDM 16QAM mode
TM 4	EUT communication with simulated station in DFT-s-OFDM 64QAM mode
TM 5	EUT communication with simulated station in DFT-s-OFDM 256QAM mode
TM 6	EUT communication with simulated station in CP QPSK mode
TM 7	EUT communication with simulated station in CP 16QAM mode
TM 8	EUT communication with simulated station in CP 64QAM mode
TM 9	EUT communication with simulated station in CP 256QAM mode

2.3 Support Unit used in test

Description	Manufacturer	Model	Serial Number
Development Board*	QUECTEL	RG255G-GL MINIPCIE	D1N26B917000068
Development Board*	QUECTEL	MINIPCIE-EVB	MP825E40J000044
Remark: *the information are provided by applicant.			

2.4 Test Environment

Temperature:	Normal: 15℃ ~ 35℃, Extreme: -30℃ ~ +50℃
Relative Humidity:	45 ~ 56 % RH Ambient
Voltage:	Nominal: 3.8 Vdc, Extreme: Low 3.3 Vdc, High 4.3 Vdc

2.5 Test RF Cable

For all conducted test items: The offset level is set spectrum analyzer to compensate the RF cable loss and attenuator factor between RF conducted output port and spectrum analyzer. With the offset compensation, the spectrum analyzer reading level will be exactly the RF output level.
The spectrum analyzer offset is derived from RF cable loss and attenuator factor.
Offset = RF cable loss + attenuator factor.

2.6 Modifications

No modifications were made during testing.

All rights reserved. Unless otherwise specified, no part of this report may be reproduced or utilized in any part, form or by any means, electronic or mechanical, including photocopying and microfilm, without permission in writing from TOWE.

2.7 Test Setup Diagram

2.7.1 Conducted Configuration

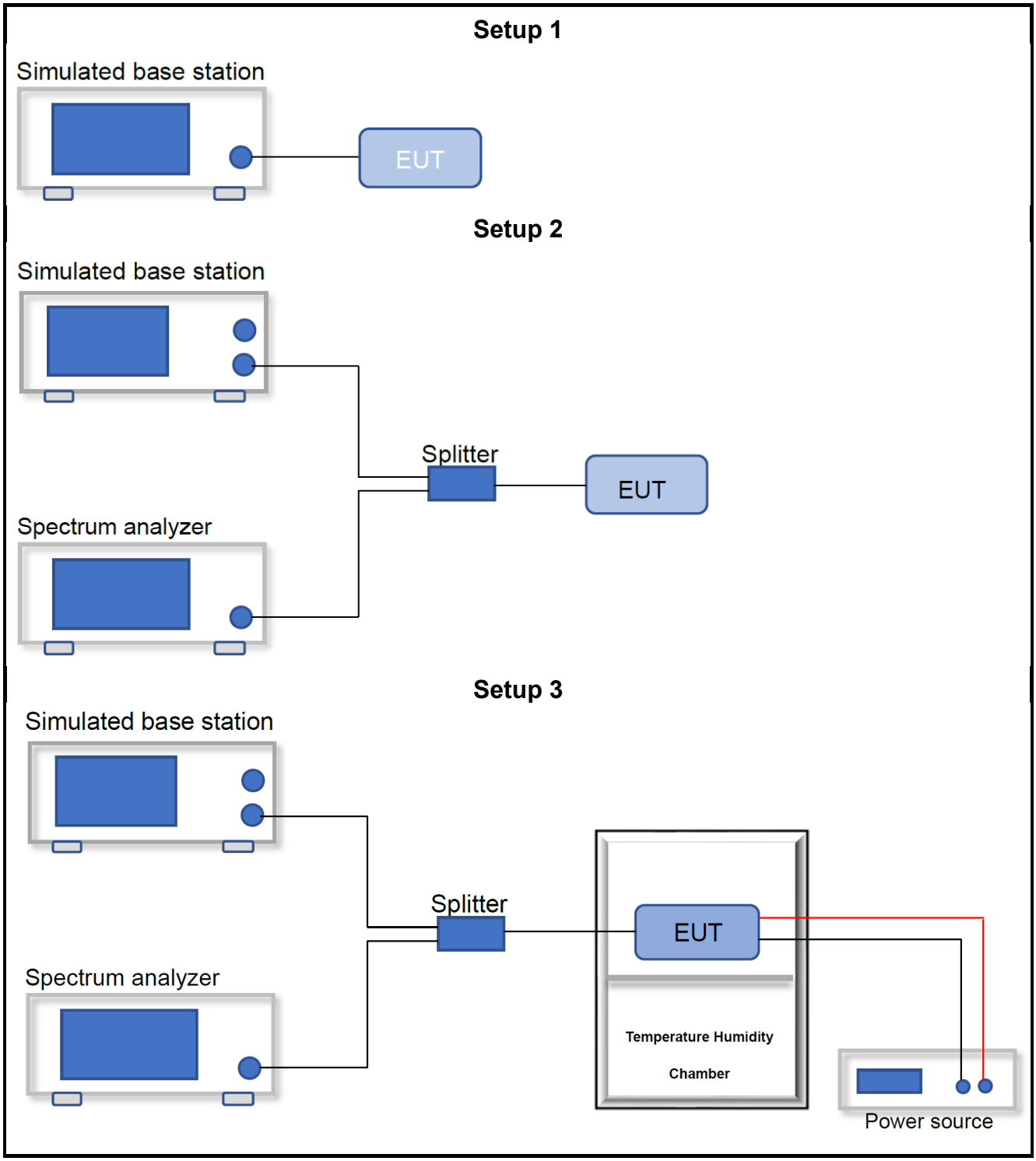

All rights reserved. Unless otherwise specified, no part of this report may be reproduced or utilized in any part, form or by any means, electronic or mechanical, including photocopying and microfilm, without permission in writing from TOWE.

2.7.2 Radiated Configuration

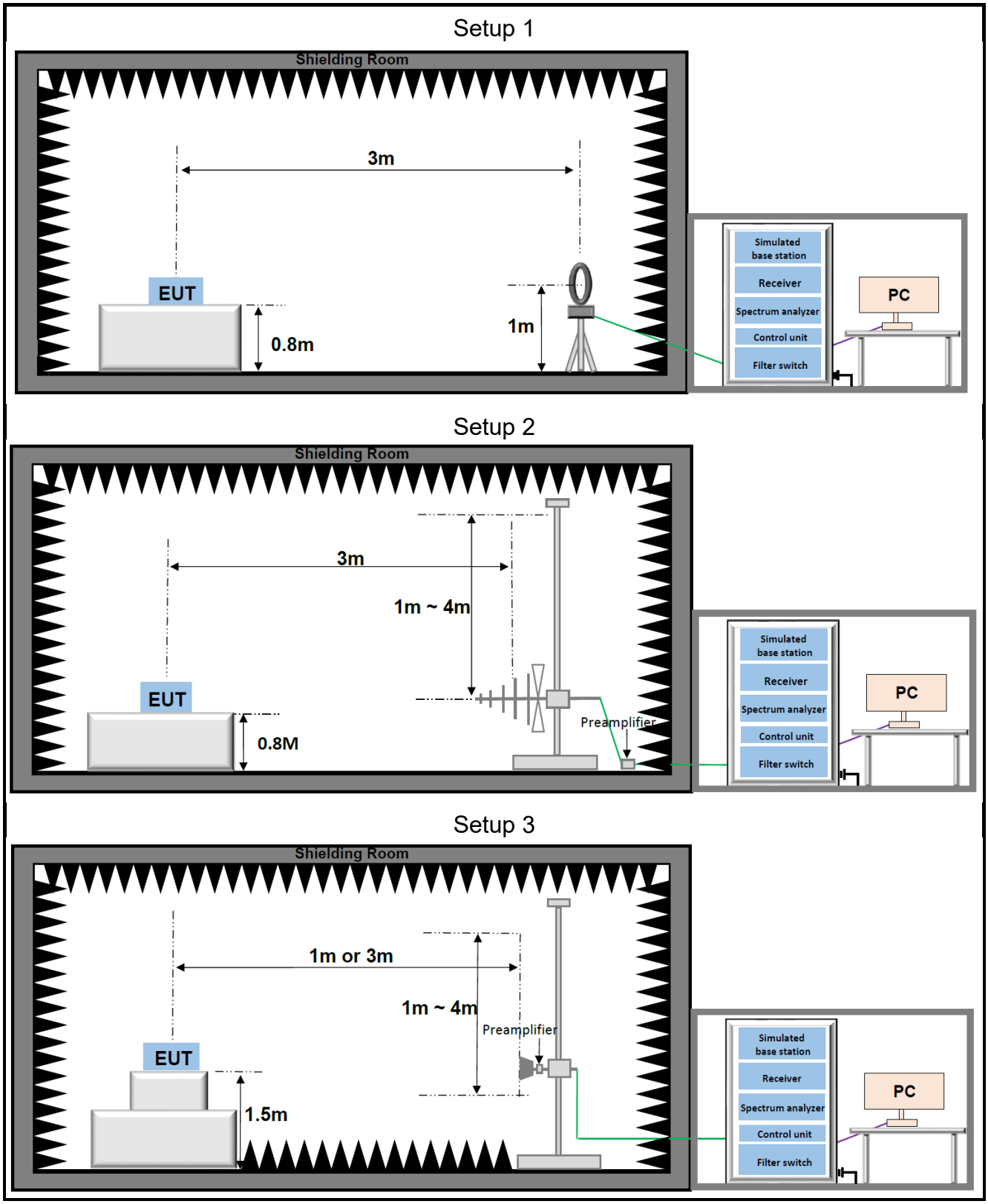

All rights reserved. Unless otherwise specified, no part of this report may be reproduced or utilized in any part, form or by any means, electronic or mechanical, including photocopying and microfilm, without permission in writing from TOWE.

3 Equipment and Measurement Uncertainty

All test and measuring equipment utilized to perform the tests documented in this report are calibrated on a regular basis, whichever is less, and where applicable is traceable recognized national standards.

3.1 Test Equipment List

RF Conducted 02					
Description	**Manufacturer**	**Model**	**S.N.**	**Last Due**	**Cal Due**
Signal Analyzer	Keysight	N9020A	MY53280106	2026/03/05	2027/03/04
EXG X-Series Microwave Analog Signal Generator	Keysight	N5173B	MY62220561	2025/05/29	2026/05/28
				2026/05/29	2027/05/28
Radio Communication Test Station	Anritsu	MT8000A	6262036781	2025/10/31	2026/10/30
Power Divider	Qotana	DBPD0200001800C	22122900036	2025/03/11	2027/03/10
Hygrometer	BingYu	HTC-1	N/A	2025/05/29	2027/05/28
EXA Signal Analyzer, Multi-touch	Keysight	N9010B	MY63440541	2025/05/29	2026/05/28
				2026/05/29	2027/05/28
5G NR Basestation	StartPoint	SP9500-CTS	SP20676	2026/03/05	2027/03/04
Band Reject Filter Group	Tonscend	JS0806-F	23C806F0669	N/A	N/A
RF Control Unit	Tonscend	JS0806-1	22L8060651	N/A	N/A
Measurement Software	Tonscend	TS1120 V3.1.46	10636	N/A	N/A

Radiated Emission					
Description	**Manufacturer**	**Model**	**S.N.**	**Last Due**	**Cal Due**
Biconic Logarithmic Periodic Antennas	Schwarzbeck	VULB9163	1643	2023/06/25	2026/06/24
Double-Ridged Horn Antennas	Schwarzbeck	BBHA 9120D	2809	2023/06/25	2026/06/24
Broad-Band Horn Antenna	Schwarzbeck	BBHA 9170	1290	2023/06/25	2026/06/24
Loop Antenna	Schwarzbeck	FMZB 1519C	1519C-028	2023/06/29	2026/06/28
Signal Analyzer	Keysight	N9020A	MY50200055	2026/03/06	2027/03/05
EXA Signal Analyzer, Multi-touch	Keysight	N9010B	MY63440541	2025/05/29	2026/05/28
				2026/05/29	2027/05/28
Wideband Radio Communication Tester	R&S	CMW500	150645	2026/03/06	2027/03/05
Low Noise Amplifier	Tonscend	TAP9K3G40	AP23A8060273	2025/03/11	2027/03/10
Low Noise Amplifier	Tonscend	TAP01018050	AP22G806258	2025/03/11	2027/03/10
Low Noise Amplifier	Tonscend	TAP18040048	AP22G806247	2025/03/11	2027/03/10
Hygrometer	BINGYU	HTC-1	N/A	2025/07/25	2026/07/24
Test Software	Tonscend	TS+	Version: 5.0.0	N/A	N/A

All rights reserved. Unless otherwise specified, no part of this report may be reproduced or utilized in any part, form or by any means, electronic or mechanical, including photocopying and microfilm, without permission in writing from TOWE.

3.2 Measurement Uncertainty

Parameter	U_{lab}
Frequency error	50.30Hz
Output Power	0.76dB
Conducted spurious emissions	2.22dB
Radiated Emissions(9kHz~30MHz)	2.40dB
Radiated Emissions(30MHz~1000MHz)	4.66dB
Radiated Emissions(1GHz~18GHz)	5.42dB
Radiated Emissions(18GHz~40GHz)	5.46dB

Uncertainty figures are valid to a confidence level of 95%

All rights reserved. Unless otherwise specified, no part of this report may be reproduced or utilized in any part, form or by any means, electronic or mechanical, including photocopying and microfilm, without permission in writing from TOWE.

4 Test Results

4.1 Output Power(ERP / EIRP / Conducted Power)

Limits

FCC Part	Test Band	Limit
§22.913(a)(5)	NR Band n5/ NR Band n26 (824~849 MHz)	The ERP of mobile transmitters and auxiliary test transmitters must not exceed 7watts.
§24.232(c)	NR Band n2/ NR Band n25	Mobile and portable stations are limited to 2 watts EIRP and the equipment must employ a means for limiting power to the minimum necessary for successful communications.
§27.50(h)(2)	NR Band n7/ NR Band n38/ NR Band n41	Mobile and other user stations. Mobile stations are limited to 2.0 watts EIRP. All user stations are limited to 2.0 watts transmitter output power
§27.50(d)(4)	NR Band n66	Fixed, mobile, and portable (hand-held) stations operating in the 1710-1755MHz band and mobile and portable stations operating in the 1695-1710 MHz and 1755-1780MHz bands are limited to 1watt EIRP. Fixed stations operating in the 1710-1755MHz band are limited to a maximum antenna height of 10 meters above ground. Mobile and portable stations operating in these bands must employ a means for limiting power to the minimum necessary for successful communications.
§27.50(c)(10)	NR Band n12/71/85	Portable stations (hand-held devices) in the 600 MHz uplink band and the 698-746 MHz band, and fixed and mobile stations in the 600 MHz uplink band are limited to 3watts ERP.
§27.50(k)(3)	5G NR n77/78(3450-3550MHz)	Mobile devices are limited to 1Watt (30 dBm) EIRP
§27.50(j)(3)	5G NR n77/78(3700-3980MHz)	Mobile and portable stations are limited to 1 Watt EIRP
§27.50(b)(9)	NR Band n13	Control stations and mobile stations transmitting in the 746–757 MHz, 776–788 MHz, and 805–806 MHz bands and fixed stations transmitting in the 787–788 MHz and 805–806 MHz bands are limited to 30 watts ERP.
§90.542(a)	NR Band n14	Portable stations (hand-held devices) transmitting in the 758-768 MHz band and the 788-798 MHz band are limited to 3 watts ERP.
§90.635(b)	NR Band n26(814~824MHz)	The maximum output power of the transmitter for mobile stations is 100 watts (20dBw).

Test Procedure

FCC KDB 971168 D01 V03r01 Section 5.2.1, for Conducted Output Power;

FCC KDB 971168 D01 V03r01 Section 5.2, for 4.2 for Effective (Isotropic) Radiated Power

Test Settings

Conducted Output Power:

The transmitter output was connected to a calibrated attenuator, the other end of which was connected to the simulated base station. The simulated station was set to force the EUT to its maximum power setting, Transmitter output power was read off in dBm, Read values have added cable loss and attenuation.

Effective (Isotropic) Radiated Power:

All rights reserved. Unless otherwise specified, no part of this report may be reproduced or utilized in any part, form or by any means, electronic or mechanical, including photocopying and microfilm, without permission in writing from TOWE.

The formula for calculating ERP/EIRP based on conduction power is as follows:
EIRP(dBm) = Conducted Power (dBm) + antenna gain (dBi)
ERP=EIRP - 2.15dB

Test Setup

Refer to section 2.7.1 Setup 1

Measuring Instruments

The measuring equipment is listed in the section 3.1 of this test report.

Test Result

The detailed test data see: **Appendix.**

All rights reserved. Unless otherwise specified, no part of this report may be reproduced or utilized in any part, form or by any means, electronic or mechanical, including photocopying and microfilm, without permission in writing from TOWE.

4.2 Maximum EIRP and Maximum PSD

Limits

FCC Part	Test Band	Limit
§27.50(a)(3)	NR Band n30	For mobile and portable stations transmitting in the 2305-2315 MHz band or the 2350-2360 MHz band, the average EIRP must not exceed 50 milliwatts within any 1 megahertz of authorized bandwidth, except that for mobile and portable stations compliant with 3GPP LTE standards or another advanced mobile broadband protocol that avoids concentrating energy at the edge of the operating band the average EIRP must not exceed 250 milliwatts within any 5 megahertz of authorized bandwidth but may exceed 50 milliwatts within any 1 megahertz of authorized bandwidth.

Test Procedure

KDB 971168 D01 V03r01 Section 5.4

Test Settings

1. Set span to 2 × to 3 × the OBW.
2. Set RBW = 1% to 5% of the OBW.
3. Set VBW ≥ 3 × RBW.
4. Set number of measurement points in sweep ≥ 2 × span / RBW.
5. Sweep time:
   a) Set = auto-couple, or
   b) Set ≥ [10 × (number of points in sweep) × (transmission symbol period)] for single sweep (automation-compatible) measurement.
6. Detector = power averaging (rms).
7. Set sweep trigger to “free run.”
8. Trace average at least 100 traces in power averaging (rms) mode if sweep is set to auto-couple. To accurately determine the average power over the on and off time of the transmitter, it can be necessary to increase the number of traces to be averaged above 100, or if using a manually configured sweep time, increase the sweep time.
9. Compute power by integrating the spectrum across the OBW of the signal using the instrument’s band or channel power measurement function with band/channel limits set equal to the OBW band edges. If the instrument does not have a band or channel power function, sum the spectrum levels (in linear power units) at intervals equal to the RBW extending across the entire OBW of the spectrum.
10. Add 10 log (1/duty cycle) to the measured power level to compute the average power during continuous transmission. For example, add [10 log (1/0.25)] = 6 dB if the duty cycle is a constant 25%.

Test notes

1. When average PSD limits are specified, the same fundamental measurement condition applies as previously discussed (i.e., averaging is to be performed only over durations of active transmissions at maximum output power level). Thus, when performing this measurement, the EUT must either be configured to transmit continuously at full power while the compliance measurement is performed, or else the measurement instrumentation must be configured to acquire data only over durations when the EUT is actively transmitting at full power. In circumstances where neither of these conditions can be realized, then alternative procedures are provided for both constant duty cycle and non-constant duty cycle transmissions.
2. The PSD is measured following the same procedures described in 5.2.4.4 for measuring the total average power, but with the RBW set to the reference bandwidth specified by the applicable regulatory requirement, and by using the marker function to identify the maximum PSD instead of summing the power across the OBW. If the fundamental measurement condition cannot be realized, then one of the alternative procedures in 5.2.4.4.2 or 5.2.4.4.3 should be selected.

All rights reserved. Unless otherwise specified, no part of this report may be reproduced or utilized in any part, form or by any means, electronic or mechanical, including photocopying and microfilm, without permission in writing from TOWE.

Test Setup

Refer to section 2.7.1 Setup 2

Measuring Instruments

The measuring equipment is listed in the section 3.1 of this test report.

Test Result

The detailed test data see: **Appendix.**

All rights reserved. Unless otherwise specified, no part of this report may be reproduced or utilized in any part, form or by any means, electronic or mechanical, including photocopying and microfilm, without permission in writing from TOWE.

4.3 Peak-Average Ratio

Limits

§22.913(d): The peak-to-average ratio (PAR) of the transmission must not exceed 13 dB.

§24.232(d): The peak-to-average ratio (PAR) of the transmission may not exceed 13 dB.

§27.50(d)(5): The peak-to-average ratio (PAR) of the transmission may not exceed 13 dB.

Test Procedure

FCC KDB 971168 D01 V03r01 Section 5.7.1

Test Settings

The following guidelines are offered for performing a CCDF measurement.

1. Set resolution/measurement bandwidth ≥ OBW or specified reference bandwidth.
2. Set the number of counts to a value that stabilizes the measured CCDF curve.
3. Set the measurement interval as follows:
   a) For continuous transmissions, set to the greater of [10 × (number of points in sweep) × (transmission symbol period)] or 1 ms.
   b) For burst transmissions, employ an external trigger that is synchronized with the EUT burst timing sequence, or use the internal burst trigger with a trigger level that allows the burst to stabilize. Set the measurement interval to a time that is less than or equal to the burst duration.
   c) If there are several carriers in a single antenna port, the peak power shall be determined for each individual carrier (by disabling the other carriers while measuring the required carrier) and the total peak power calculated from the sum of the individual carrier peak powers.
4. Record the maximum PAPR level associated with a probability of 0.1%.
5. The peak power level is calculated form the sum of the PAPR value from step d) to the measured average power.

Test Setup

Refer to section 2.7.1 Setup 2

Measuring Instruments

The measuring equipment is listed in the section 3.1 of this test report.

Test Result

The detailed test data see: **Appendix.**

All rights reserved. Unless otherwise specified, no part of this report may be reproduced or utilized in any part, form or by any means, electronic or mechanical, including photocopying and microfilm, without permission in writing from TOWE.

4.4 Occupied Bandwidth

Limits

For Reporting Purposes only

Test Procedure

FCC KDB 971168 D01 V03r01 Section 4.2 & 4.3

Test Settings

1. The transmitter output was connected to a calibrated coaxial cable and coupler, The other end is connected to the spectrum analyzer and simulated station.
2. The signal analyzer automatic bandwidth measurement capability was used to perform the 99% occupied bandwidth and the 26dB bandwidth. The bandwidth measurement was not influenced by ant intermediate power nulls in the fundamental emission.
3. The simulated base station was set to force the EUT to its maximum power setting.
4. RBW = 1 - 5% of the expected OBW
5. VBW = 3 times the RBW
6. Sweep = Auto
7. Detector = Peak
8. Trace = Max hold
9. The trace was allowed to stabilize

Test Setup

Refer to section 2.7.1 Setup 2

Measuring Instruments

The measuring equipment is listed in the section 3.1 of this test report.

Test Result

The detailed test data see: **Appendix.**

All rights reserved. Unless otherwise specified, no part of this report may be reproduced or utilized in any part, form or by any means, electronic or mechanical, including photocopying and microfilm, without permission in writing from TOWE.

4.5 Band Edge and Emission Mask

Limits

Band	Limit
NR Band n5/ NR Band n26 (824~849 MHz) NR Band n2/ NR Band n25 NR Band n12/71/85 NR Band n13 NR Band n66	The power of any emission outside of the authorized operating frequency ranges must be attenuated below the transmitting power (P) by a factor of at least 43 + 10 log(P) dB.
NR Band n7/ NR Band n38/ NR Band n41	For mobile digital stations, the attenuation factor shall be not less than 40 + 10 log (P) dB on all frequencies between the channel edge and 5 MHz from the channel edge, 43 + 10 log (P) dB on all frequencies between 5 MHz and X MHz from the channel edge, and 55 + 10 log (P) dB on all frequencies more than X MHz from the channel edge, where X is the greater of 6 MHz or the actual emission bandwidth as defined in paragraph (m)(6) of this section. In addition, the attenuation factor shall not be less that 43 + 10 log (P) dB on all frequencies between 2490.5 MHz and 2496 MHz and 55 + 10 log (P) dB at or below 2490.5 MHz.
NR Band n14/NR Band 26(814 ~ 824MHz)	On all frequencies between 769-775 MHz and 799-805 MHz, by a factor not less than 65 + 10 log (P) dB in a 6.25 kHz band segment, for mobile and portable stations. On any frequency between 775-788 MHz, above 805 MHz, and below 758 MHz, by at least 43 + 10 log (P) dB. in the 100 kHz bands immediately outside and adjacent to the frequency block, a resolution bandwidth of 30 kHz be employed.
NR Band n30	By a factor of not less than: 43 + 10 log (P) dB on all frequencies between 2305 and 2320 MHz and on all frequencies between 2345 and 2360 MHz that are outside the licensed band(s) of operation, not less than 55 + 10 log (P) dB on all frequencies between 2320 and 2324 MHz and on all frequencies between 2341 and 2345 MHz, not less than 61 + 10 log (P) dB on all frequencies between 2324 and 2328 MHz and on all frequencies between 2337 and 2341 MHz, and not less than 67 + 10 log (P) dB on all frequencies between 2328 and 2337 MHz; By a factor of not less than 43 + 10 log (P) dB on all frequencies between 2300 and 2305 MHz, 55 + 10 log (P) dB on all frequencies between 2296 and 2300 MHz, 61 + 10 log (P) dB on all frequencies between 2292 and 2296 MHz, 67 + 10 log (P) dB on all frequencies between 2288 and 2292 MHz, and 70 + 10 log (P) dB below 2288 MHz; By a factor of not less than 43 + 10 log (P) dB on all frequencies between 2360 and 2365 MHz, and not less than 70 + 10 log (P) dB above 2365 MHz.
NR Band n77/78(3450-3550MHz)	In the 1 MHz bands immediately outside and adjacent to the licensee's frequency block: ≤-13 dB/(1% EBW, but no exceed 200kHz). In the bands between 1 and 5 MHz removed from the licensee's frequency block: ≤-13 dB/(500 kHz, or grater)
NR Band n77/78(3700-3980MHz)	In the 1 MHz bands immediately outside and adjacent to the licensee's frequency block: ≤-13 dB/(1% EBW, or 350kHz). In the bands between 1 and 5 MHz removed from the licensee's frequency block: ≤-13 dB/(500 kHz, or grater)

All rights reserved. Unless otherwise specified, no part of this report may be reproduced or utilized in any part, form or by any means, electronic or mechanical, including photocopying and microfilm, without permission in writing from TOWE.

Test Procedure

FCC KDB 971168 D01 V03r01 Section 6.0

Test Settings

1. The transmitter output was connected to a calibrated coaxial cable and coupler, The other end is connected to the spectrum analyzer and simulated station.
2. The simulated base station was set to force the EUT to its maximum power setting.
3. Start and stop frequency were set such that the band edge would be placed in the center of the plot.
4. RBW ≥ 1% of the emission bandwidth
5. VBW ≥ 3 times the RBW
6. Detector = RMS
7. Number of sweep point ≥ 2 times Span/RBW
8. Sweep = Auto
9. Trace = Max hold
10. The trace was allowed to stabilize

Test Setup

Refer to section 2.7.1. Setup 2

Measuring Instruments

The measuring equipment is listed in the section 3.1 of this test report.

Test Result

The detailed test data see: **Appendix.**

All rights reserved. Unless otherwise specified, no part of this report may be reproduced or utilized in any part, form or by any means, electronic or mechanical, including photocopying and microfilm, without permission in writing from TOWE.

4.6 Spurious Emission at Antenna Terminals

Limits

Band	Limit
NR Band n5/ NR Band n26 (824~849 MHz) NR Band n2/ NR Band n25 NR Band n66 NR Band n77/78(3450-3550MHz) NR Band n77/78(3700-3980MHz) NR Band n12/13/71/85 NR Band n14	The power of any emission outside of the authorized operating frequency ranges must be attenuated below the transmitting power (P) by a factor of at least 43 + 10 log(P) dB.
NR Band n7/ NR Band n38/ NR Band n41	All frequencies between 2490.5 MHz and 2496 MHz and 55 + 10 log (P) dB at or below 2490.5 MHz.
NR Band n26(814~824 MHz)	The power of any emission shall be attenuated below the transmitter power (P) in watts by at least 43 + 10Log (P) decibels or 80 decibels, whichever is the lesser attenuation.
NR Band n30	not less than 70 + 10 log (P) dB below 2288 MHz and above 2365 MHz.

Test Procedure

FCC KDB 971168 D01 V03r01 Section 6.0

Test Settings

1. The transmitter output was connected to a calibrated coaxial cable and coupler, The other end is connected to the spectrum analyzer and simulated station.
2. The simulated base station was set to force the EUT to its maximum power setting.
3. Start frequency was set to 9kHz and stop frequency was set to 10th harmonic.
4. RBW and VBW (see test notes)
5. Detector = RMS
6. Sweep = Auto
7. Trace = trace average for continuous emissions, max hold for pulse emissions
8. Allow trace to fully stabilize

Test Notes

1. Compliance with the applicable limits is based on the use of measurement instrumentation employing a resolution bandwidth 100kHz or greater for measurements below 1GHz. However, in the 1MHz bands immediately outside and adjacent to the frequency block a resolution bandwidth of at least one percent of the emission bandwidth of the fundamental emission of the transmitter may be employed. The emission bandwidth is defined as the width of the signal between two points, one below the carrier center frequency and one above the carrier center frequency, outside of which all emission is attenuated at least 26dB below the transmitter power
2. 9kHz – 150kHz: RBW=1kHz, VBW≥3 times the RBW
3. 150kHz – 30MHz: RBW=10kHz, VBW≥3 times the RBW

Test Setup

Refer to section 2.7.1. Setup 2

Measuring Instruments

The measuring equipment is listed in the section 3.1 of this test report.

Test Result

The detailed test data see: **Appendix.**

All rights reserved. Unless otherwise specified, no part of this report may be reproduced or utilized in any part, form or by any means, electronic or mechanical, including photocopying and microfilm, without permission in writing from TOWE.

4.7 Field Strength of Spurious Radiation

Limits

Band	Limit
NR Band n5/ NR Band n26 (824~849 MHz) NR Band n2/ NR Band n25 NR Band n12/71/85 NR Band n66 NR Band n77/78(3450-3550MHz) NR Band n77/78(3700-3980MHz)	The power of any emission outside of the authorized operating frequency ranges must be attenuated below the transmitting power (P) by a factor of at least 43 + 10 log(P) dB.
NR Band n13	On any frequency outside the 776-788 MHz band, the power of any emission shall be attenuated outside the band below the transmitter power (P) by at least 43 + 10 log (P) dB; For operations in the 746-758 MHz, 775-788 MHz, and 805-806 MHz bands, emissions in the band 1559-1610 MHz shall be limited to −70 dBW/MHz equivalent isotropically radiated power (EIRP) for wideband signals, and −80 dBW EIRP for discrete emissions of less than 700 Hz bandwidth. For the purpose of equipment authorization, a transmitter shall be tested with an antenna that is representative of the type that will be used with the equipment in normal operation.
NR Band n14	least 43 + 10 log (P) dB. For operations in the 758-775 MHz and 788-805 MHz bands, all emissions including harmonics in the band 1559-1610 MHz shall be limited to −70 dBW/MHz equivalent isotopically radiated power (EIRP) for wideband signals.
NR Band n7/ NR Band n38/ NR Band n41	All frequencies between 2490.5 MHz and 2496 MHz and 55 + 10 log (P) dB at or below 2490.5 MHz.
NR Band n26(814~824 MHz)	The power of any emission shall be attenuated below the transmitter power (P) in watts by at least 43 + 10Log (P) decibels or 80 decibels, whichever is the lesser attenuation.
NR Band n30	By a factor of not less than: 43 + 10 log (P) dB on all frequencies between 2305 and 2320 MHz and on all frequencies between 2345 and 2360 MHz that are outside the licensed band(s) of operation, not less than 55 + 10 log (P) dB on all frequencies between 2320 and 2324 MHz and on all frequencies between 2341 and 2345 MHz, not less than 61 + 10 log (P) dB on all frequencies between 2324 and 2328 MHz and on all frequencies between 2337 and 2341 MHz, and not less than 67 + 10 log (P) dB on all frequencies between 2328 and 2337 MHz; By a factor of not less than 43 + 10 log (P) dB on all frequencies between 2300 and 2305 MHz, 55 + 10 log (P) dB on all frequencies between 2296 and 2300 MHz, 61 + 10 log (P) dB on all frequencies between 2292 and 2296 MHz, 67 + 10 log (P) dB on all frequencies between 2288 and 2292 MHz, and 70 + 10 log (P) dB below 2288 MHz; By a factor of not less than 43 + 10 log (P) dB on all frequencies between 2360 and 2365 MHz, and not less than 70 + 10 log (P) dB above 2365 MHz.

Test Procedure

FCC KDB 971168 D01 V03r01 Section 7

All rights reserved. Unless otherwise specified, no part of this report may be reproduced or utilized in any part, form or by any means, electronic or mechanical, including photocopying and microfilm, without permission in writing from TOWE.

Test Settings

1. For radiated emissions measurements performed at frequencies less than or equal to 1GHz, the EUT shall be placed on a RF-transparent table or support at a nominal height of 80cm above the reference ground plane.
2. For radiated emissions measurements performed at frequencies above 1GHz, the EUT shall be placed on a RF-transparent table or support at a nominal height of 80cm above the ground plane.
3. Radiated measurements shall be made with the measurement antenna positioned in both horizontal and vertical polarization. The measurement antenna shall be varied from 1m to 4m in height above the reference ground in a search for the relative positioning that produces the maximum radiated signal level (i.e, field strength or received power), when orienting the measurement antenna in vertical polarization, the minimum height of the lowest element of the antenna shall clear the site reference ground plane by at least 25cm.
4. For each suspected emission, the EUT was ranged its worst case and then tune the antenna tower(from 1~4m) and turntable(from 0~360°) find the maximum reading. Preamplifier and a high pass filter are used for the test in order get better signal level comply with the guidelines.
5. The simulated base station was set to force the EUT to its maximum transmitting power.
6. spectrum analyzer setting:
   Measurements 9kHz~150kHz: RBW = 300Hz; VBW ≥ 3 kHz; Detector = RMS
   Measurements 150kHz~30MHz: RBW = 10kHz; VBW ≥ 30 kHz; Detector = RMS
   Measurements 30MHz~1000MHz: RBW = 100kHz or 1MHz; VBW ≥ 1MHz or 3MHz; Detector = RMS
   Measurements Above 1000MHz: RBW = 1 MHz; VBW ≥ 3 MHz; Detector = RMS
7. The field strength is calculated by adding the Antenna Factor, Cable Factor. The basic equation with a sample calculation is as follows:
   E(dBμV/m) = Measured amplitude level (dBμV) + Cable Loss (dB) + Antenna Factor (dB/m).
   E(dBμV/m) = Measured amplitude level (dBm) + 107 + Cable Loss (dB) + Antenna Factor (dB/m).
   E(dBuV/m) = EIRP(dBm) - 20log(D) + 104.8; where D is the measurement distance(in the far field region) in m.
   EIRP(dBm) = E(dBμV/m) + 20log(D) - 104.8; where D is the measurement distance(in the far field region) in m.
   *So, from d: The measuring distance is usually at 3m, then 20*Log(3)=9.5424*
   Then, EIRP (dBm)= E (dBμV/m) +9.5424-104.8=E (dBμV/m)-95.2576
8. Repeat above procedures until all frequencies measured was complete.
9. Measure and record the results in the test report.

Test notes

1. The EUT was tested in three orthogonal planes and in all possible test configurations and positioning. The worst-case emissions are reported with the EUT positioning, modulations, RB sizes and offsets, and channel bandwidth configurations shown in the tables below.
2. Emissions below 18GHz were measured at a 3-meter test distance while emissions above 18GHz were measured at a 1-meter test distance with the application of a distance correction factor.
3. Radiated spurious emissions were investigated from 9kHz to 30MHz, 30MHz-1GHz and above 1GHz. the disturbance between 9kHz to 30MHz, 30MHz-1GHz and 18GHz to 40GHz was very low. The amplitude of spurious emissions from the radiator which are attenuated more than 20dB below the limit need not be recorded, so only the harmonics had been displayed.
4. The "-" shown in the following RSE tables are used to denote a noise floor measurement.

Test Setup

Refer to section 2.7.2 for details.

Measuring Instruments

The measuring equipment is listed in the section 3.1 of this test report.

Test Result

The detailed test data see: **Appendix.**

All rights reserved. Unless otherwise specified, no part of this report may be reproduced or utilized in any part, form or by any means, electronic or mechanical, including photocopying and microfilm, without permission in writing from TOWE.

4.8 Frequency Stability V.S. Temperature, Voltage

Limits

§22.355:
The carrier frequency shall not depart from the reference frequency in excess of ±2.5 ppm for mobile stations.
§24.235 / §27.54 / §90.213:
The frequency stability shall be sufficient to ensure that the fundamental emission stays within the authorized frequency block.

Test Procedure

FCC KDB 971168 D01 V03r01 Section 9

Test Settings

1. The carrier frequency of the transmitter is measured at room temperature (20°C to provide a reference).
2. The equipment is turned on in a "standby" condition for fifteen minutes before applying power to the transmitter. Measurement of the carrier frequency of the transmitter is made within one minute after applying power to the transmitter.
3. Frequency measurements are made at 10°C intervals ranging from -30°C to +50°C. A period of at least one half-hour is provided to allow stabilization of the equipment at each temperature level.

Test Notes

a.) Temperature:
The temperature is varied from -30°C to +50°C in 10°C increments using an environmental chamber.
b.) Primary Supply Voltage:
The primary supply voltage is varied from 85% to 115% of the nominal value for non hand-carried battery and AC powered equipment. For hand-carried, battery-powered equipment, primary supply voltage is reduced to the battery operating end point which shall be specified by the manufacturer.

Test Setup

Refer to section 2.7.1 Setup 3

Measuring Instruments

The measuring equipment is listed in the section 3.1 of this test report.

Test Result

The detailed test data see: **Appendix.**

All rights reserved. Unless otherwise specified, no part of this report may be reproduced or utilized in any part, form or by any means, electronic or mechanical, including photocopying and microfilm, without permission in writing from TOWE.

5 Test Setup Photos

The detailed test data see: **Appendix-D WWAN Setup Photos**

All rights reserved. Unless otherwise specified, no part of this report may be reproduced or utilized in any part, form or by any means, electronic or mechanical, including photocopying and microfilm, without permission in writing from TOWE.

Appendix

Appendix List:

Appendix-B NR Band n2
Appendix-B NR Band n5
Appendix-B NR Band n7
Appendix-B NR Band n12
Appendix-B NR Band n13
Appendix-B NR Band n14
Appendix-B NR Band n25
Appendix-B NR Band n26(814-824)
Appendix-B NR Band n26(824-849)
Appendix-B NR Band n30
Appendix-B NR Band n38
Appendix-B NR Band n41
Appendix-B NR Band n66
Appendix-B NR Band n71
Appendix-B NR Band n77(3450-3550)
Appendix-B NR Band n77(3700-3980)
Appendix-B NR Band n78(3450-3550)
Appendix-B NR Band n85
Appendix-C Field Strength of Spurious Radiation-NR

~The End~

All rights reserved. Unless otherwise specified, no part of this report may be reproduced or utilized in any part, form or by any means, electronic or mechanical, including photocopying and microfilm, without permission in writing from TOWE.