HSM110XC
Hardware Design

Short-Range Products

Version: 1.0.0

Date: 2026-04-10

Status: Preliminary

At Quectel, our aim is to provide timely and comprehensive services to our customers. If you require any assistance, please contact our headquarters:

Quectel Wireless Solutions Co., Ltd.
No. 8 Waipojing Road, Sijing Town, Songjiang District, Shanghai 201601, China
Tel: +86 21 5108 6236
Email: info@quectel.com

Or our local offices. For more information, please visit:
https://www.quectel.com/contact/.

For technical support, or to report documentation errors, please visit:
https://www.quectel.com/tech-support/.
Or email us at: support@quectel.com.

Legal Notices

We provide this document to support your product design. You are required to design your products based on the specifications and parameters set forth herein. You agree that you are responsible for using independent analysis and evaluation in designing intended products, and we provide reference designs for illustrative purposes only. Before using any hardware, software or service guided by this document, please read this notice carefully. Even though we employ commercially reasonable efforts to provide the best possible experience, you hereby acknowledge and agree that this document and related services hereunder are provided to you on an “as available” basis. You acknowledge and agree that we may add to, amend, or restate this document at any time at our sole discretion without any prior notice to you, and such additions, amendments, or restatements shall be binding upon you.

Use and Disclosure Restrictions

License Agreements

The recipient of any hardware, software, materials, or documentation provided by us shall keep such content confidential, unless expressly authorized by us. The recipient shall not disclose, access, or use any part of the received content for any purpose other than the execution and implementation of the intended project.

Copyright

Our and third-party products hereunder may contain copyrighted materials, including but not limited to protected content, hardware, software, and documentation owned by us or applicable third parties. Unless prior written consent is obtained, you shall not access, use, or disclose any documents or information provided by us, nor shall you copy, reproduce, republish, display, translate, distribute, merge, modify, or create derivative works from any such copyrighted materials. We and the applicable third party retain exclusive rights to all copyrighted materials. No license to any patents, copyrights, trademarks, or service marks shall be granted or transferred. For the avoidance of doubt, no form of purchase shall be construed as granting any license beyond a normal, non-exclusive, royalty-free license to use the product. We reserve the right to pursue legal action against any violation of confidentiality obligations, unauthorized use, or any other unlawful or malicious use of the aforementioned documents and information.

Trademarks

Unless otherwise expressly provided, nothing in this document shall be construed as conferring any rights to use any trademark, trade name, name, abbreviation, or counterfeit thereof owned by us or any third party in advertising, publicity, or any other contexts.

Third-Party Rights

You understand that this document may refer to hardware, software, and/or documentation owned by one or more third parties ("third-party materials"). Use of such third-party materials is subject to all applicable restrictions and obligations set forth herein.

We make no warranty or representation, either express or implied, regarding the third-party materials, including but not limited to any implied or statutory, warranties of merchantability or fitness for a particular purpose, quiet enjoyment, system integration, information accuracy, and non-infringement of any third-party intellectual property rights with regard to the licensed technology or use thereof. Nothing herein constitutes a representation or warranty by us to either develop, enhance, modify, distribute, market, sell, offer for sale, or otherwise maintain production of any our products or any other hardware, software, device, tool, information, or product. We moreover disclaim any and all warranties arising from the course of dealing, course of performance, or usage of trade.

Privacy Policy

To enable product functionality, certain device data may be uploaded to our or third-party servers, including those operated by carriers, chipset suppliers, or servers designated by you. We strictly comply with applicable laws and regulations and will retain, use, disclose, or otherwise process relevant data solely for the purpose of enabling product functionality, or as permitted by applicable laws. Before interacting with any third party regarding data exchange, please be informed of and understand their privacy and data security policies.

Disclaimer

a) We shall not be liable for any damages resulting from failure to comply with applicable operational or design specifications.
b) We shall bear no liability for any inaccuracies or omissions in this document, nor for any damages arising from the use of the information contained herein.
c) While we make every effort to ensure the integrity, accuracy, and timeliness of the features and functions under development, errors or omissions may nevertheless occur. Unless otherwise provided in a valid written agreement, we make no warranties of any kind, express, implied, or statutory, and disclaim all liability for any loss or damage arising from the use of any features or functions under development, to the maximum extent permitted by law, regardless of whether such loss or damage is foreseeable.
d) We assume no legal responsibility for the accessibility, safety, accuracy, availability, legality, or completeness of any information, content, advertising, commercial offers, products, services, or materials on third-party websites or third-party resources.

Copyright © Quectel Wireless Solutions Co., Ltd. 2026. All rights reserved.

Safety Information

The following safety precautions must be observed during all phases of operation, such as usage, service or repair of any terminal or mobile incorporating the module. Manufacturers of the terminal should notify users and operating personnel of the following safety information by incorporating these guidelines into all manuals of the product. Otherwise, Quectel assumes no liability for customers' failure to comply with these precautions.

	Full attention must be paid to driving at all times in order to reduce the risk of an accident. Using a mobile while driving (even with a handsfree kit) causes distraction and can lead to an accident.
	Switch off the terminal or mobile before boarding an aircraft. The operation of wireless appliances in an aircraft is forbidden to prevent interference with communication systems. If there is an Airplane Mode, it should be enabled prior to boarding an aircraft. Please consult the airline staff for more restrictions on the use of wireless devices on an aircraft.
	Wireless devices may cause interference on sensitive medical equipment, so please be aware of the restrictions on the use of wireless devices when in hospitals, clinics or other healthcare facilities.
	The terminal or mobile contains a transceiver. When it is ON, it receives and transmits radio frequency signals. RF interference can occur if it is used close to TV sets, radios, computers or other electric equipment.
	In locations with explosive or potentially explosive atmospheres, obey all posted signs and turn off wireless devices such as mobile phone or other terminals. Areas with explosive or potentially explosive atmospheres include fueling areas, below decks on boats, fuel or chemical transfer or storage facilities, and areas where the air contains chemicals or particles such as grain, dust or metal powders.

About the Document

Revision History

Version	Date	Author	Description
-	2026-04-07	Jason Zhao/ Stephen Li	Creation of the document
1.0.0	2026-04-10	Jason Zhao/ Stephen Li	Preliminary

Contents

Safety Information 3

About the Document 4

Contents 5

Table Index 7

Figure Index 8

1 Introduction 9

2 Product Overview 9
- 2.1. Key Features 10

3 Application Interfaces 12
- 3.1. Pin Assignment 12
- 3.2. Pin Definitions 13
- 3.3. GPIO Multiplexing 16
- 3.4. Application Interfaces 19
  - 3.4.1. UART Interface 19
  - 3.4.2. SPI Interface 20
  - 3.4.3. I2C Interface 21
  - 3.4.4. ADC Interfaces 21

4 Operating Characteristics 23
- 4.1. Power Supply 23
  - 4.1.1. Reference Design for Power Supply 23
- 4.2. Reset 24
- 4.3. Download Mode 25

5 RF Specifications 26
- 5.1. Bluetooth Performances 26
- 5.2. Antenna Interfaces 26
  - 5.2.1. Antenna Interfaces 27
  - 5.2.2. Reference Design of ANT_EX 27
  - 5.2.3. RF Routing Guidelines 28
  - 5.2.4. RF Connector Recommendation 29
    - 5.2.4.1. Antenna Connector Specifications 29
    - 5.2.4.2. Antenna Connector Installation 30
    - 5.2.4.3. Recommended Manufacturers of RF Connector and Cable 32
  - 5.2.5. Requirements for Antenna Design 32
  - 5.2.6. Antenna Direction Diagram 32

6 Electrical Characteristics and Reliability 34
- 6.1. Absolute Maximum Ratings 34

6.2. Power Supply Ratings....34
6.3. Bluetooth Power Consumption....35
6.4. Digital I/O Characteristics....36
6.5. ESD Protection....36

7 Mechanical Information....37
7.1. Mechanical Dimensions....37
7.2. Recommended Footprint....38
7.3. Top View....39

8 Storage, Manufacturing and Packaging....40
8.1. Storage Conditions....40
8.2. Manufacturing and Soldering....40
8.3. Packaging Specifications....42
8.3.1. Carrier Tape....42
8.3.2. Plastic Reel....43
8.3.3. Mounting Direction....43
8.3.4. Packaging Process....44

9 Appendix References....45

Table Index

Table 1: Basic Information 9
Table 2: Key Features 10
Table 3: Parameter Definition 13
Table 4: Pin Description 13
Table 5: GPIO Multiplexing 16
Table 6: Pin Description of UART Interface 19
Table 7: Pin Description of SPI 20
Table 8: Pin Description of I2C Interface 21
Table 9: Pin Description of ADC Interfaces 21
Table 10: ADC Features 22
Table 11: Pin Description of Power Supply and GND Pins 23
Table 12: Pin Description of RESET_N 24
Table 13: Bluetooth Performances 26
Table 14: Pin Description of ANT_IN and ANT_EX 27
Table 15: Major Specifications of the RF Connector 30
Table 16: Requirements for Antenna Design 32
Table 17: Absolute Maximum Ratings (Unit: V) 34
Table 18: Module's Power Supply Ratings (Unit: V) 34
Table 19: Bluetooth Power Consumption (Unit: mA; Max.) 35
Table 20: Power Consumption in Sleep Mode (Unit: µA; Typ.) 35
Table 21: VBAT I/O Characteristics (Unit: V) 36
Table 22: Electrostatic Discharge Characteristics (Unit: kV) 36
Table 23: Recommended Thermal Profile Parameters 41
Table 24: Carrier Tape Dimension Table (Unit: mm) 42
Table 25: Plastic Reel Dimension Table (Unit: mm) 43
Table 26: Related Documents 45
Table 27: Terms and Abbreviations 45

Figure Index

Figure 2 : Pin Assignment (Top View)....12
Figure 3 : UART1 Interface Connection Diagram 19
Figure 4 : SPI Interface Connection Diagram (Master Mode)....21
Figure 5 : Reference Design of Power Supply....24
Figure 6 : Reference Circuit of Reset with Driving Circuit....24
Figure 7 : Reference Circuit of Reset with a Button....25
Figure 8 : Reset Timing 25
Figure 9 : Reference Design of Antenna Interface (ANT_EX) 27
Figure 10 : Microstrip Design on a 2-layer PCB 28
Figure 11 : Coplanar Waveguide Design on a 2-layer PCB 28
Figure 12 : Coplanar Waveguide Design on a 4-layer PCB (Layer 3 as Reference Ground)....29
Figure 13 : Coplanar Waveguide Design on a 4-layer PCB (Layer 4 as Reference Ground)....29
Figure 14 : Dimensions of the Receptacle (Unit: mm) 30
Figure 15 : Dimensions of the Receptacle (Unit: mm) 31
Figure 16 : Space Factor of Mated Connectors (Ø 0.81 mm Coaxial Cables) (Unit: mm)....31
Figure 17 : Space Factor of Mated Connectors (Ø 1.13 mm Coaxial Cables) (Unit: mm)....32
Figure 18 : Antenna Direction Diagram 33
Figure 19 : Top and Side Dimensions 37
Figure 20 : Recommended Footprint....38
Figure 21 : Top View....39
Figure 22 : Recommended Reflow Soldering Thermal Profile 41
Figure 23 : Carrier Tape Dimension Drawing (Unit: mm) 42
Figure 24 : Plastic Reel Dimension Drawing 43
Figure 25 : Mounting Direction....43
Figure 26 : Packaging Process....44

1 Introduction

This document defines HSM110XC in Open solution and describes its hardware interfaces and air interfaces connected to your applications, which can help you quickly understand the hardware interface characteristics, RF characteristics, electrical characteristics, mechanical specifications and other relevant information of the module.

The module has no RF shielding
The Class Il permissive changes is required for each specific host installation

2 Product Overview

HSM110XC is a low-power, cost-effective Bluetooth module supporting BLE 5.4 protocol. It features built-in power management unit. The module has ultra-low power consumption, with broadcast power consumption as low as 10 μA, and connected power consumption as low as 7 μA (both at 1-second intervals). The module has multiple interfaces such as UART, SPI, I2C and ADC for various applications.

The module is an SMD module with compact packaging. The general features of the module are as follow:

- ARM Cortex-M4 processor with 64 MHz low-power
- EFUSE: 256-bit
- 80 KB SRAM memory, 1 MB Flash, and 8 KB I-Cache (command cache)
- Ultra-low power consumption

Table 1: Basic Information

HSM110XC	
Product Form	SIP
Packaging Type	LGA
Pin Counts	33
Dimensions	(6 ±0.1) mm × (6 ±0.1) mm × (0.9 ±0.1) mm

Weight	Approx. 0.05 g

2.1. Key Features

Table 2: Key Features

Basic Information	
Protocol and Standard	● Bluetooth protocol: BLE 5.4 ● All hardware components fully comply with EU RoHS directive
Supply Voltage	**VBAT Power Supply:** ● 1.71 – 3.6 V ● Typ. 3.3 V
Temperature Ranges	● Normal operating temperature [1]: -40 °C to +85 °C ● Storage temperature: -45 °C to +95 °C
TE-B Kit	HSM110XC-TE-B [2]
RF Antenna Interfaces [3]	
Antenna Interfaces	● ANT_IN, ANT_EX (optional) ● 50 Ω impedance
Application Interfaces [4]	
Application Interfaces	UART, SPI, I2C, ADC

[1] Within this range, the module's indicators comply with Bluetooth specification requirements.
[2] Quectel supplies a HSM110XC-TE-B with accessories to develop and test the module.
[3] The module is provided with one of the two antenna interface designs. For more details, please contact Quectel Technical Support.

3 Application Interfaces

3.1. Pin Assignment

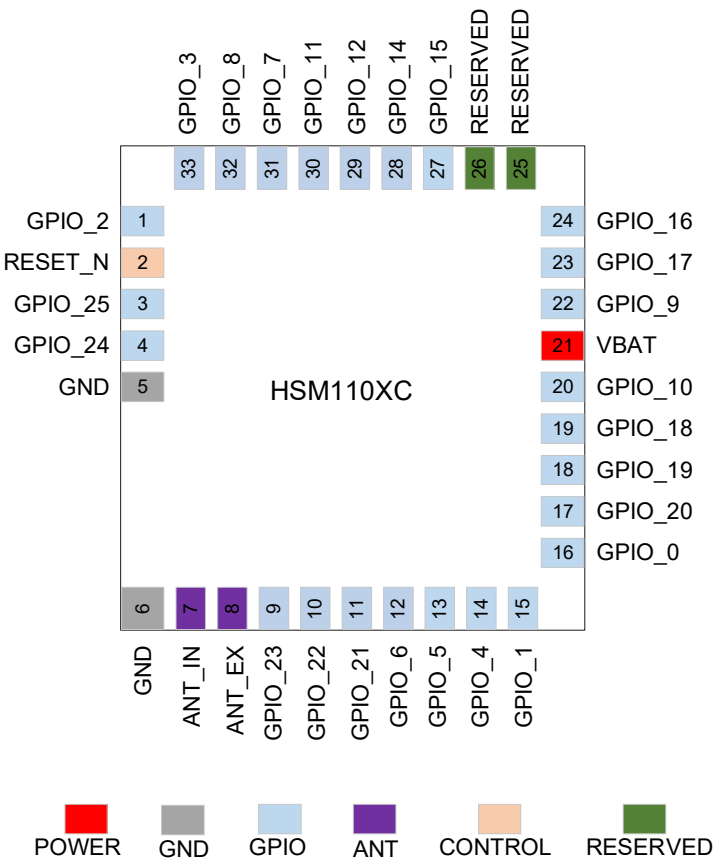

Figure 1: Pin Assignment (Top View)

NOTE

1. Keep all RESERVED and unused pins open.
2. All GND pins should be connected to ground.
3. Ensure that there is no current sink on all module pins except input power supply pins before the module turns on.
4. The module has 25 GPIO interfaces by default. In the case of multiplexing, it supports interfaces including

UART, SPI, I2C and ADC. For more details, see ***Chapter 3.3*** and ***Chapter 3.4***.

3.2. Pin Definitions

Table 3: Parameter Definition

Parameter	Description
AIO	Analog Input/Output
DI	Digital Input
DIO	Digital Input/Output
PI	Power Input
PU	Pull Up
Hi-Z	High Impedance

DC characteristics include power domain and rated current.

Table 4: Pin Description

Power Supply and GND Pins						
Pin Name	**Pin No.**	**I/O**	**Status after Reset**	**Description**	**DC Characteristics**	**Comment**
VABT	21	PI	-	Power supply for the module	Vmin = 1.71 V Vnom = 3.3 V Vmax = 3.6 V	It is recommended to provide a current of at least 0.1 A.
GND	5, 6					Connect them to the ground.
Reset						
Pin Name	**Pin No.**	**I/O**	**Status after Reset**	**Description**	**DC Characteristics**	**Comment**
RESET_N	2	DI	Hi-Z	Reset the module	VBAT	Hardware reset. Active low.

GPIO Interfaces						
Pin Name	**Pin No.**	**I/O**	**Status after Reset**	**Description**	**DC Characteristics**	**Comment**
GPIO_2	1	DIO	Hi-Z	General-purpose input/output	VBAT	
GPIO_25	3	DIO	Hi-Z	General-purpose input/output		
GPIO_24	4	DIO	Hi-Z	General-purpose input/output		
GPIO_23	9	DIO	Hi-Z	General-purpose input/output		
GPIO_22	10	DIO	Hi-Z	General-purpose input/output		
GPIO_21	11	DIO	Hi-Z	General-purpose input/output		
GPIO_6	12	DIO	Hi-Z	General-purpose input/output		
GPIO_5	13	DIO	Hi-Z	General-purpose input/output		
GPIO_4	14	DIO	Hi-Z	General-purpose input/output		
GPIO_1	15	DIO	Hi-Z	General-purpose input/output		
GPIO_0	16	DIO	Hi-Z	General-purpose input/output		
GPIO_20	17	DIO	Hi-Z	General-purpose input/output		
GPIO_19	18	DIO	Hi-Z	General-purpose input/output		
GPIO_18	19	DIO	Hi-Z	General-purpose input/output		
GPIO_10	20	DIO	Hi-Z	General-purpose input/output		
GPIO_9	22	DIO	Hi-Z	General-purpose input/output		
GPIO_17	23	DIO	Hi-Z	General-purpose input/output		
GPIO_16	24	DIO	Hi-Z	General-purpose input/output		
GPIO_15	27	DIO	Hi-Z	General-purpose input/output		

GPIO_14	28	DIO	Hi-Z	General-purpose input/output		
GPIO_12	29	DIO	Hi-Z	General-purpose input/output		
GPIO_11	30	DIO	Hi-Z	General-purpose input/output		
GPIO_7	31	DIO	Hi-Z	General-purpose input/output		
GPIO_8	32	DIO	Hi-Z	General-purpose input/output		
GPIO_3	33	DIO	Hi-Z	General-purpose input/output		
RF Antenna Interfaces						
Pin Name	**Pin No.**	**I/O**	**Status after Reset**	**Description**	**DC Characteristics**	**Comment**
ANT_IN	7	AIO	-	Bluetooth antenna interface (module internal antenna)		50 Ω impedance.
ANT_EX	8	AIO	-	Bluetooth antenna interface		
RESERVED Pins						
Pin Name	**Pin No.**					**Comment**
RESERVED	25, 26					Keep them open.

NOTE

To reduce the probability of module damage and extend module service life, do not power up and down frequently.

3.3. GPIO Multiplexing

The module supports 25 GPIO interfaces. THe multiplexing details are shown in the following figure:

Table 5: GPIO Multiplexing

Pin Name	Pin No.	Alternate Function 0 (GPIO No.)	Alternate Function 1	Alternate Function 2	Alternate Function 3	Alternate Function 4	Alternate Function 5
GPIO_0	16	GPIO_0	UART0_TX	-	SPI0_MISO	I2C_SCL	-
GPIO_1	15	GPIO_1	UART0_RX	UART1_CTS	SPI0_MOSI	I2C_SDA	-
GPIO_2	1	GPIO_2	UART0_TX	UART1_RTS	SPI0_CSN	I2C_SCL	ADC1
GPIO_3	33	GPIO_3	UART0_RX	UART1_RX	SPI0_SCK	I2C_SDA	ADC2
GPIO_4	14	GPIO_4	UART0_TX	UART1_TX	SPI1_MISO	I2C_SCL	BOOT
GPIO_5	13	GPIO_5	UART0_TX	UART1_TX	SPI1_MOSI	I2C_SDA	-
GPIO_6	12	GPIO_6	UART0_RX	UART1_RX	SPI1_CSN	I2C_SCL	-
GPIO_7	31	GPIO_7	UART0_RX	UART1_CTS	SPI1_SCK	I2C_SDA	ADC3
GPIO_8	32	GPIO_8	UART0_TX	UART1_RTS	SPI0_MISO	I2C_SCL	ADC4
GPIO_9	22	GPIO_9	UART0_RX	UART1_RX	SPI0_MOSI	I2C_SDA	-

GPIO_10	20	GPIO_10	UART0_TX	UART1_TX	SPI0_CSN	I2C_SCL	-
GPIO_11	30	GPIO_11	UART0_RX	UART1_CTS	SPI0_SCK	I2C_SDA	ADC5
GPIO_12	29	GPIO_12	UART0_TX	UART1_RTS	SPI1_MISO	I2C_SCL	ADC6
GPIO_14	28	GPIO_14	UART0_TX	UART1_TX	SPI1_CSN	I2C_SCL	ADC7
GPIO_15	27	GPIO_15	UART0_RX	UART1_CTS	SPI1_SCK	I2C_SDA	ADC8
GPIO_16	24	GPIO_16	UART0_TX	UART1_RTS	SPI0_MISO	I2C_SCL	-
GPIO_17	23	GPIO_17	UART0_RX	UART1_RX	SPI0_MOSI	I2C_SDA	-
GPIO_18	19	GPIO_18	UART0_TX	UART1_TX	SPI0_CSN	I2C_SCL	-
GPIO_19	18	GPIO_19	UART0_RX	UART1_CTS	SPI0_SCK	I2C_SDA	-
GPIO_20	17	GPIO_20	UART0_TX	UART1_RTS	SPI1_MISO	I2C_SCL	-
GPIO_21	11	GPIO_21	UART0_RX	UART1_RX	SPI1_MOSI	I2C_SDA	-
GPIO_22	10	GPIO_22	UART0_TX	UART1_TX	SPI1_CSN	I2C_SCL	-
GPIO_23	9	GPIO_23	UART0_RX	-	SPI1_SCK	I2C_SDA	-
GPIO_24	4	GPIO_24	UART0_TX	UART1_RX	SPI0_MISO	I2C_SCL	-
GPIO_25	3	GPIO_25	UART0_RX	UART1_TX	SPI0_MOSI	I2C_SDA	-

NOTE

1.After the module is powered down, all of its GPIO interfaces must be driven low. Otherwise, the current leakage may make the module enter an abnormal status.

2.The maximum number of each application interface multiplexed with GPIO interfaces is not available simultaneously. For more details, see ***Chapter 3.4***.

3.4. Application Interfaces

3.4.1. UART Interface

In the case of multiplexing, the module supports up to two UART interfaces. UART1 interface supports hardware flow control, and it can be used for data transmission with peripherals. The two UART interfaces all support baud rates up to 921600 bps.

The UART1 interface connection between the module and the MCU is shown below:

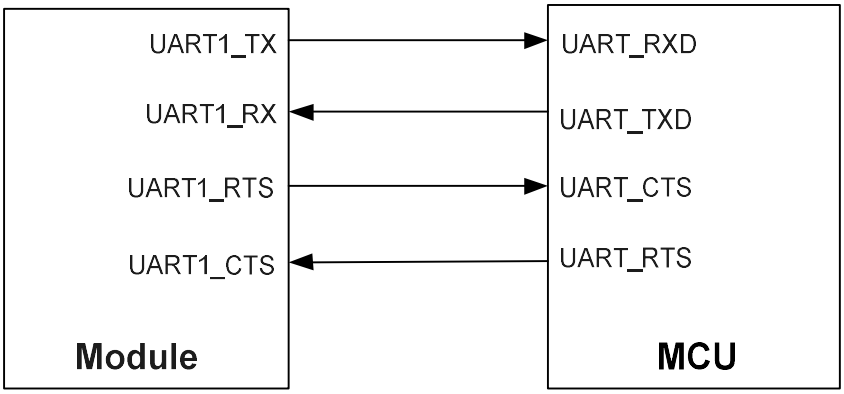

Figure 2: UART1 Interface Connection Diagram

NOTE

To increase the stability of UART1 communication, it is recommended to add UART1 hardware flow control design.

Table 6: Pin Description of UART Interface

Pin Name	Pin No.	Multiplexing Function	I/O	Description	Comment
GPIO_5	13	UART0_TX	DO	UART0 transmit	For other multiplexing UART configuration, see ***Table 5***.
GPIO_6	12	UART0_RX	DI	UART0 receive	
GPIO_4	14	UART1_TX	DO	UART1 transmit	
GPIO_3	33	UART1_RX	DI	UART1 receive	
GPIO_2	1	UART1_RTS	DO	Request to send signal from the	

				module
GPIO_1	15	UART1_CTS	DI	Clear to send signal to the module

3.4.2. SPI Interface

In the case of multiplexing, the module supports two SPI interfaces, which support both master and slave modes (operating at master mode by default). The maximum clock frequency is 32 MHz. For another multiplexing SPI configuration, see ***Table 5***.

Table 7: Pin Description of SPI

Pin Name	Pin No.	Multiplexing Function	I/O	Description	Comment
GPIO_8	32	SPI0_MISO	DIO	SPI0 master-in slave-out	
GPIO_9	22	SPI0_MOSI	DIO	SPI0 master-out slave-in	
GPIO_10	20	SPI0_CSN	DIO	SPI0 chip select	They are output signals in master mode and input signals in slave mode.
GPIO_11	30	SPI0_SCK	DIO	SPI0 clock	
GPIO_20	17	SPI1_MISO	DIO	SPI1 master-in slave-out	
GPIO_21	11	SPI1_MOSI	DIO	SPI1 master-out slave-in	
GPIO_22	10	SPI1_CSN	DIO	SPI1 chip select	They are output signals in master mode and input signals in slave mode.
GPIO_23	09	SPI1_SCK	DIO	SPI1 clock	

The common connection of SPI interface is shown below.

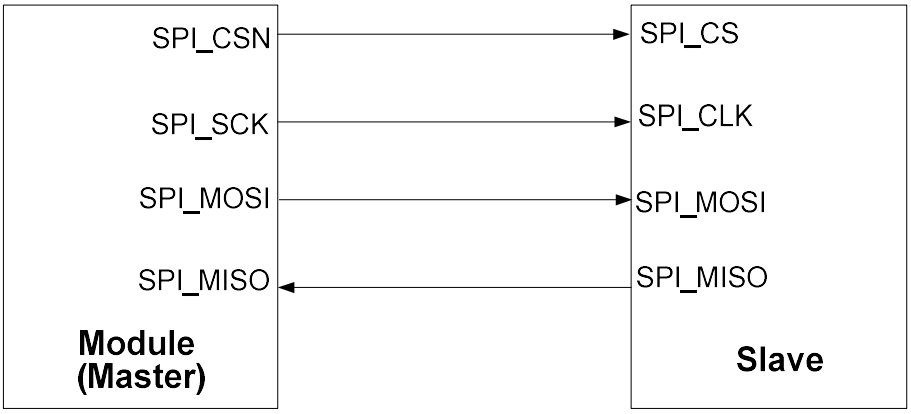

Figure 3: SPI Interface Connection Diagram (Master Mode)

3.4.3. I2C Interface

In the case of multiplexing, the module supports up to one I2C interface.

Table 8: Pin Description of I2C Interface

Pin Name	Pin No.	Multiplexing Function	I/O	Description	Comment
GPIO_14	28	I2C_SCL	OD	I2C serial clock	For other multiplexing I2C configuration, see ***Table 5***.
GPIO_15	27	I2C_SDA	OD	I2C serial data	

3.4.4. ADC Interfaces

In the case of multiplexing, the module supports up to eight ADC interfaces. To improve the voltage measurement accuracy, the trace of ADC interface should be surrounded by ground.

Table 9: Pin Description of ADC Interfaces

Pin Name	Pin No.	Multiplexing Function	I/O	Description
GPIO_2	1	ADC1	AI	General ADC1 interface
GPIO_3	33	ADC2	AI	General ADC2 interface
GPIO_7	31	ADC3	AI	General ADC3 interface
GPIO_8	32	ADC4	AI	General ADC4 interface

GPIO_11	30	ADC5	AI	General ADC5 interface
GPIO_12	29	ADC6	AI	General ADC6 interface
GPIO_14	28	ADC7	AI	General ADC7 interface
GPIO_15	27	ADC8	AI	General ADC8 interface

Table 10: ADC Features

Parameter	Min.	Typ.	Max.	Unit
ADC Input Voltage	0	-	VBAT	V
ADC Resolution	-	12	-	bit

NOTE

1. The input voltage of every ADC interface should not exceed its corresponding voltage range.
2. It is prohibited to supply any voltage to ADC interface when the nodule is not powered by the VBAT.
3. It is recommended to use a resistor divider circuit for ADC application.

4 Operating Characteristics

4.1. Power Supply

Table 11: Pin Description of Power Supply and GND Pins

Pin Name	Pin No.	I/O	Description	Min.	Typ.	Max.	Unit
VBAT	21	PI	Power supply for the module	1.71	3.3	3.6	V
GND	5, 6						

4.1.1. Reference Design for Power Supply

The module is powered by VBAT, and it is recommended to use a power supply chip that provides at least 0.1 A to ensure sufficient current. For better power supply performance, it is recommended to parallel two filter capacitors of 1 μF and 100 nF near the module's VBAT pin. In addition, to avoid ripple and surge and ensure the stability of the power supply to the module, add a TVS diode with adequate surge power capability on each input power rail. If the TVS is not added, surges on the input power rail may cause damage to the module. As per design rules, the longer the VBAT trace is, the wider it should be.

The reference design for the VBAT is shown below:

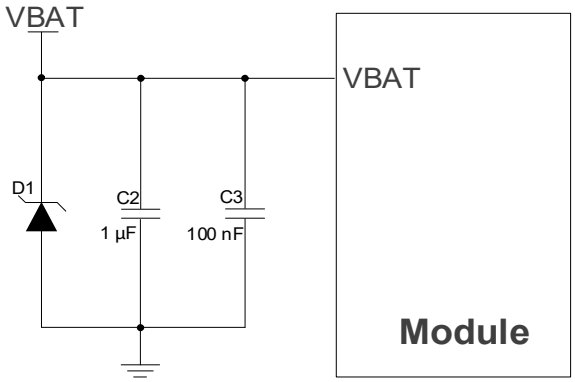

Figure 4: Reference Design of Power Supply

4.2. Reset

Pull RESET_N down to 0.3 V for at least 40 µs and then release it to reset the module. In order to avoid module restart due to abnormal interference, it is recommended to route the trace as short as possible and surround it with ground. It is also recommended to add a 10 kΩ pull-up resistor on the RESET_N signal trace to VBAT, and a 100 nF pull-down capacitor to GND in parallel.

Table 12: Pin Description of RESET_N

Pin Name	Pin No.	I/O	Description	Comment
RESET_N	2	DI	Reset the module	Hardware reset. Active low.

It is recommended to use an open-collector driver circuit to control RESET_N.

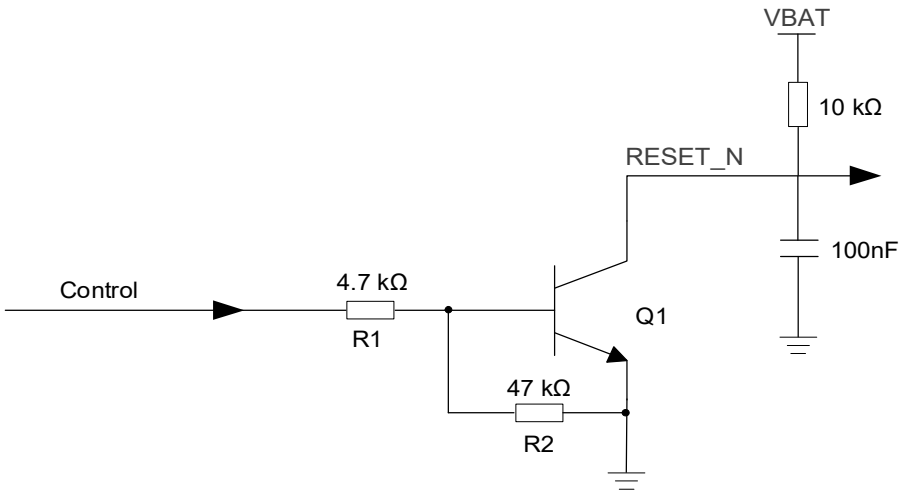

Figure 5: Reference Circuit of Reset with Driving Circuit

Another way to control the RESET_N pin is by using a button directly. A TVS diode should be placed near the button for protection against ESD, since static electricity may be generated by the touch of a finger. A reference circuit is shown in the following figure.

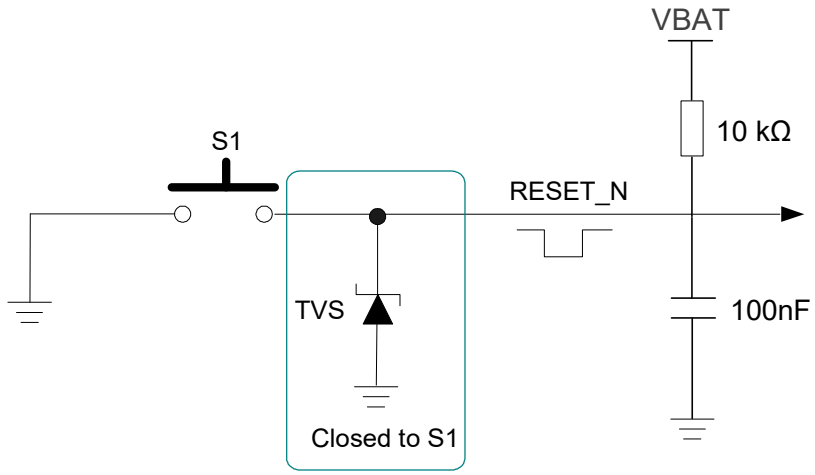

Figure 6: Reference Circuit of Reset with a Button

The module reset timing is shown below:

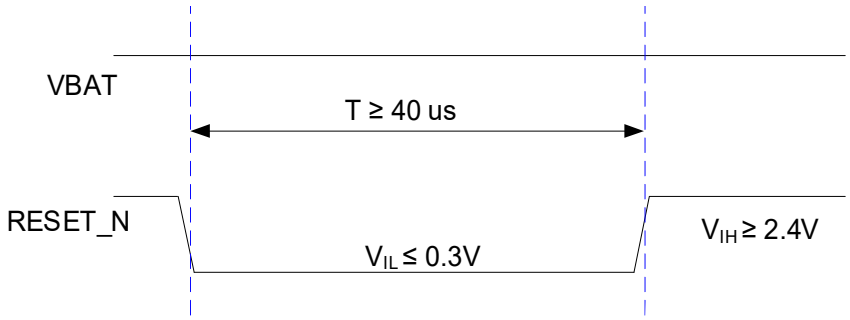

Figure 7: Reset Timing

4.3. Download Mode

Pull down the BOOT pin (GPIO_4) when the module is powered up, then power it down and up again to enable the module to enter the download mode. In the download mode, UART0 can be used for firmware download.

5 RF Specifications

5.1. Bluetooth Performances

Table 13: Bluetooth Performances

Operating Frequency		
2.400 – 2.4835 GHz		
Modulation		
GFSK		
Operating Mode		
BLE		
Condition (VBAT = 3.3 V; Temp. 25° C)	**Typ.; Unit: dBm; Tolerance: ± 2 dB**	
	Transmit Power	**Receiver Sensitivity**
BLE (1 Mbps)	3	-98
BLE (2 Mbps)	3	-96

5.2. Antenna Interfaces [5]

Appropriate antenna type and design should be used with matched antenna parameters according to specific application. It is required to conduct a comprehensive functional test for the RF design before mass production of terminal products. The entire content of this chapter is provided for illustration only. Analysis, evaluation and determination are still necessary when designing target products.

The module is provided with one of the two antenna interface designs: module internal antenna (ANT_IN) and pin antenna interface (ANT_EX). When the module's internal antenna (ANT_IN) is selected, short-circuit ANT_IN to

[5] The module is provided with one of the two antenna interface designs. For more details, please contact Quectel Technical Support.

ANT_EX; when the pin antenna interface (ANT_EX) is used, keep ANT_IN open and connect an external antenna via ANT_EX. The impedance of antenna port is 50 Ω.

5.2.1. Antenna Interfaces

Table 14: Pin Description of ANT_IN and ANT_EX

Pin Name	Pin No.	I/O	Description	Comment
ANT_IN	7	AIO	Bluetooth antenna interface (module internal antenna)	50 Ω impedance.
ANT_EX	8	AIO	Bluetooth Antenna Interface	

5.2.2. Reference Design of ANT_EX

The circuit of pin antenna interface (ANT_EX) is shown below. For better RF performance, it is recommended to reserve a dual-L type circuit and an ESD protection component. Components (R1, C1, C2, C3 and D1) of the dual-L type circuit should be placed as close to the antenna as possible. C1, C2 and D1 are not mounted by default and a 0 Ω resistor is mounted on R1.

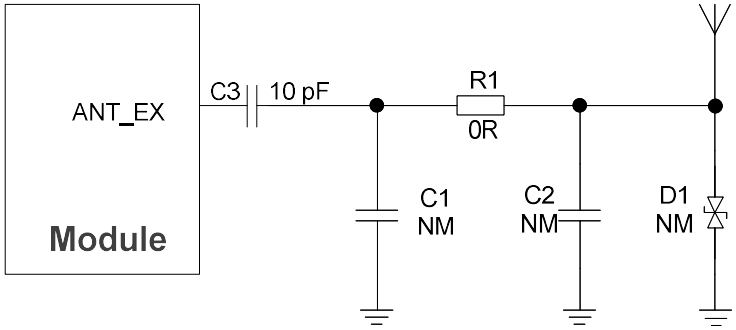

Figure 8: Reference Design of Antenna Interface (ANT_EX)

NOTE

1.It is recommended to reserve an ESD protection component for the antenna interface and the junction capacitance should not exceed 0.05 pF.

2.Notes on C3:

1) If there is DC power at the antenna port, place a capacitor on C3 to prevent short circuit to ground. The capacitance value is recommended to be 10 pF, which can be adjusted according to the debugging results.
2) If there is no DC power in the peripheral design:
   a) Do not reserve C3.

b) If C3 has already been reserved, it should be mounted with a component, and it is recommended to use a 0 Ω resistor. You can also match the components according to the debugging results.

5.2.3. RF Routing Guidelines

For user's PCB, the characteristic impedance of all RF traces should be controlled to 50 Ω. The impedance of the RF traces is usually determined by the trace width (W), the materials' dielectric constant, the height from the reference ground to the signal layer (H), and the spacing between RF traces and grounds (S). Microstrip or coplanar waveguide is typically used in RF layout to control characteristic impedance. The following are reference designs of microstrip or coplanar waveguide with different PCB structures.

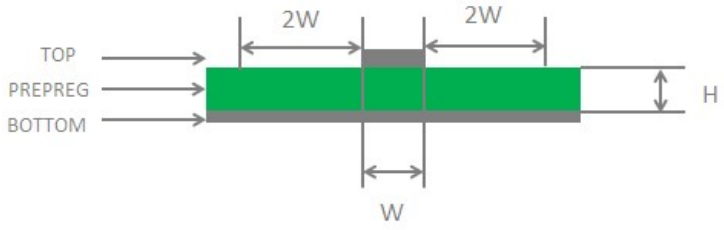

Figure 9: Microstrip Design on a 2-layer PCB

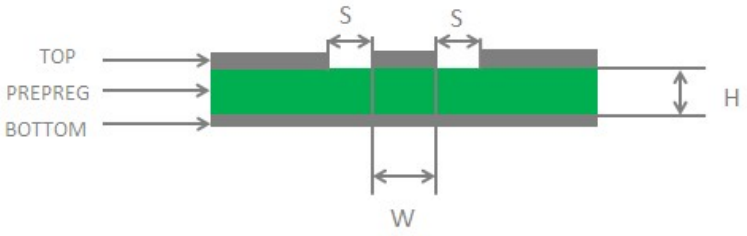

Figure 10: Coplanar Waveguide Design on a 2-layer PCB

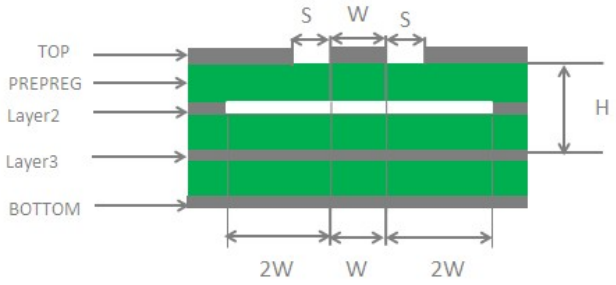

Figure 11: Coplanar Waveguide Design on a 4-layer PCB (Layer 3 as Reference Ground)

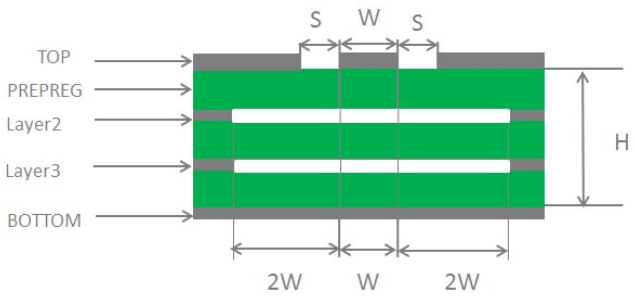

Figure 12: Coplanar Waveguide Design on a 4-layer PCB (Layer 4 as Reference Ground)

To ensure RF performance and reliability, follow the principles below in RF layout design:

- Use an impedance simulation tool to accurately control the characteristic impedance of RF traces to 50 Ω.
- The GND pins adjacent to RF pins should not be designed as thermal relief pads, and should be fully connected to ground.
- The distance between the RF pins and the RF connector should be as short as possible and all the right-angle traces should be changed to curved ones. The recommended trace angle is 135°.
- There should be clearance under the signal pin of the antenna connector or solder joint.
- The reference ground of RF traces should be complete. Meanwhile, adding some ground vias around RF traces and the reference ground could help to improve RF performance. The distance between the ground vias and RF traces should be at least twice the width of RF signal traces (2 × W).
- Keep RF traces away from interference sources (such as DC-DC, (U)SIM/USB/SDIO high frequency digital signals, display signals, and clock signals), and avoid intersection and paralleling between traces on adjacent layers.

For more details about RF layout, see ***document [2]***.

5.2.4. RF Connector Recommendation

5.2.4.1. Antenna Connector Specifications

The mechanical dimensions of the receptacle are as follows.

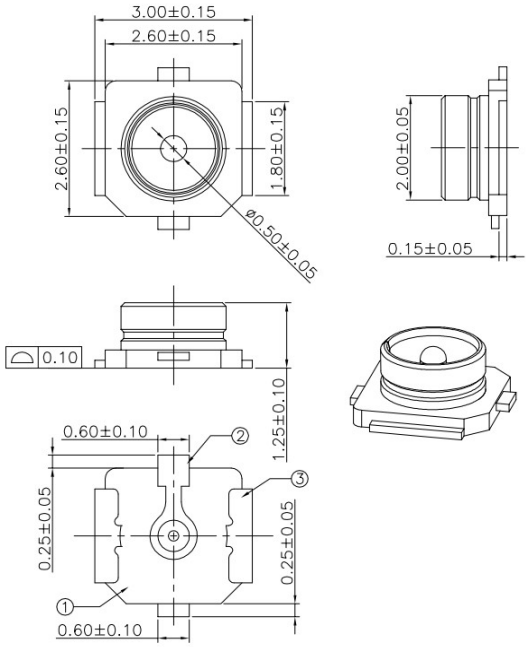

Figure 13: Dimensions of the Receptacle (Unit: mm)

Table 15: Major Specifications of the RF Connector

Parameter	Specification
Nominal Frequency Range	DC to 6 GHz
Nominal Impedance	50 Ω
Temperature Ranges	-40 ° C to +85 ° C
Voltage Standing Wave Ratio (VSWR)	Meet the following requirements: ● Max. 1.3 (DC – 3 GHz) ● Max. 1.45 (3 – 6 GHz)

5.2.4.2. Antenna Connector Installation

The receptacle used in conjunction with the module will accept two types of mated plugs that will meet a maximum height of 2.0 mm using a Ø 0.81 mm coaxial cable or a maximum height of 2.2 mm utilizing a Ø 1.13 mm coaxial cable.

The following figure shows the dimensions of mated plugs using a Ø 0.81 mm/Ø 1.13 mm coaxial cable.

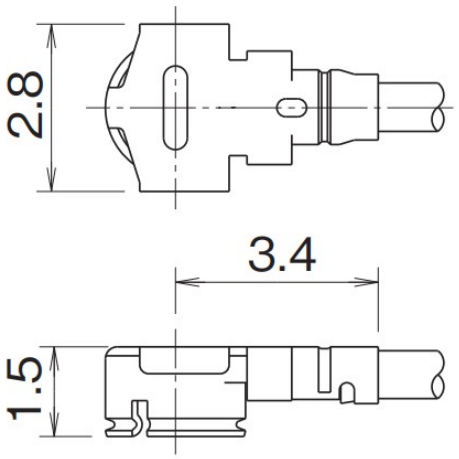

Figure 14: Dimensions of the Receptacle (Unit: mm)

The following figure illustrates the connection between the receptacle on the module and the mated plug using a Ø 0.81 mm coaxial cable.

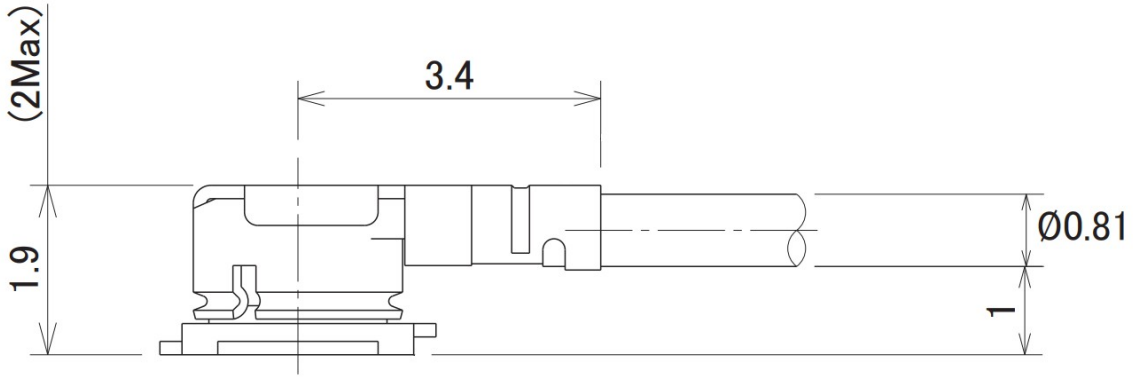

Figure 15: Space Factor of Mated Connectors (Ø 0.81 mm Coaxial Cables) (Unit: mm)

The following figure illustrates the connection between the receptacle on the module and the mated plug using a Ø 1.13 mm coaxial cable.

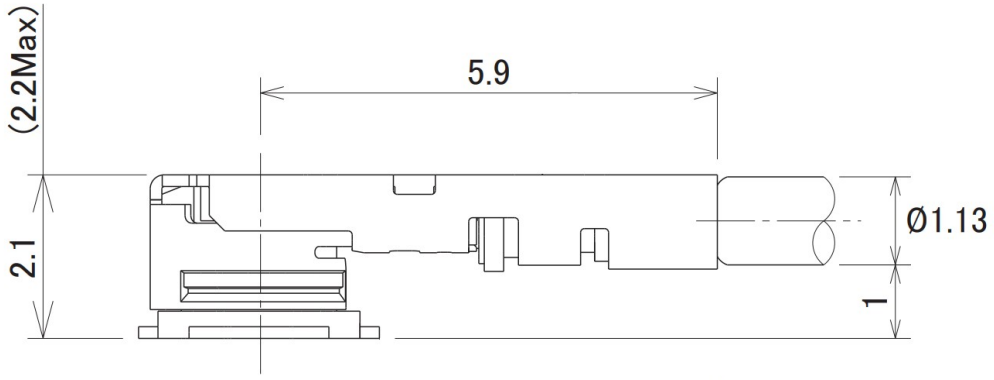

Figure 16: Space Factor of Mated Connectors (Ø 1.13 mm Coaxial Cables) (Unit: mm)

5.2.4.3. Recommended Manufacturers of RF Connector and Cable

RF connectors and cables by I-PEX are recommended. For more details, visit https://www.i-pex.com.

5.2.5. Requirements for Antenna Design

Table 16: Requirements for Antenna Design

Parameter	Requirements
Frequency Range (GHz)	**2.4 GHz:** 2.400 – 2.4835
Loss (dB)	< 1
Input Impedance (Ω)	50 (Typ.)
VSWR	≤ 2 (Typ.)
Gain (dBi)	1 (Typ.)
Polarization	Vertical

5.2.6. Antenna Direction Diagram

X-Y Plane X-Y Plane
X-Z Plane

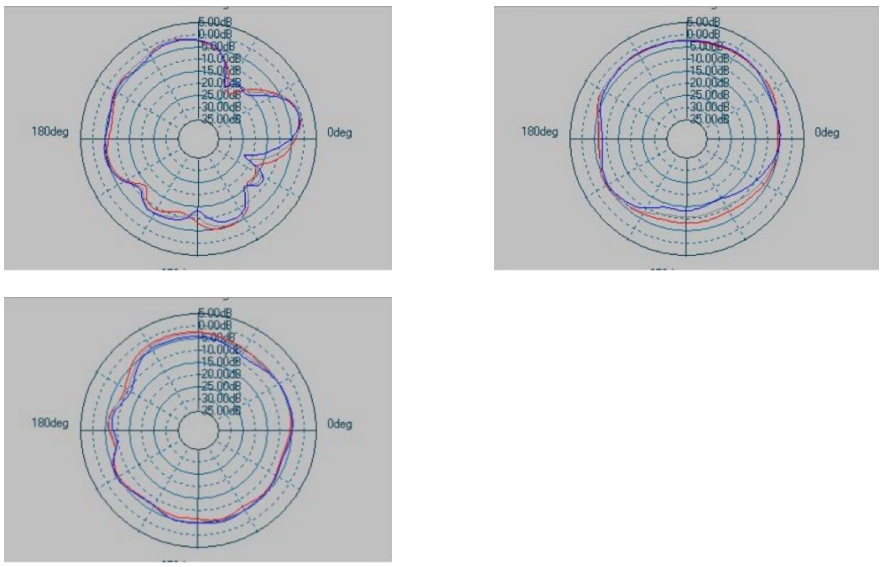

Figure 17: Antenna Direction Diagram

6 Electrical Characteristics and Reliability

6.1. Absolute Maximum Ratings

Table 17: Absolute Maximum Ratings (Unit: V)

Parameter	Min.	Max.
VBAT	-0.3	3.9
Voltage at digital pins	-0.3	3.9
ADC Input voltage	0	3.9

NOTE

Exceeding the conditions of use as shown above may cause permanent damage to the module.

6.2. Power Supply Ratings

Table 18: Module's Power Supply Ratings (Unit: V)

Parameter	Description	Condition	Min.	Typ.	Max.
VBAT	Power supply for the module	The actual input voltages must be kept between the minimum and maximum values	1.71	3.3	3.6

6.3. Bluetooth Power Consumption

Test conditions for module power consumption are as follows:

- An ambient temperature of 25 °C
- Typical power domain
- 50 Ω impedance

The following power consumption data are for your reference only. Actual values may vary among different modules due to differences in internal components, software versions and test ambient temperatures. For more details, please contact Quectel Technical Support.

Table 19: Bluetooth Power Consumption (Unit: mA; Max.)

Condition	I_{VBAT}
RX	3.4
TX Power: 20 dBm	3.6
TX Power: 0 dBm	4.2
TX Power: +4 dBm	5.5
TX Power: +7.5 dBm	8.5
Beacon broadcasting, interval: 1 s, 23 bytes, 0 dBm	10 μA

Table 20: Power Consumption in Sleep Mode (Unit: μA; Typ.)

Power Supply Mode	32 KHz RCOSC	SRAM retention	Wakeup Mode	Power Consumption
Turn-off	OFF	OFF	GPIO wake-up	0.6
Sleep Mode	ON	16 KB RAM	GPIO wake-up and clock wake-up	1.2
	ON	80 KB RAM	GPIO wake-up and clock wake-up	1.7

6.4. Digital I/O Characteristics

Table 21: VBAT I/O Characteristics (Unit: V)

Parameter	Description	Min.	Max.
V_{IH}	High-level input voltage	0.7 × VBAT	VBAT + 0.3
V_{IL}	Low-level input voltage	-0.3	0.3 × VBAT
V_{OH}	High-level output voltage	0.9 × VBAT	-
V_{OL}	Low-level output voltage	-	0.1 × VBAT

6.5. ESD Protection

Static electricity occurs naturally and it may damage the module. Therefore, applying proper ESD countermeasures and handling methods is imperative. For example, wear anti-static gloves during the development, production, assembly and testing of the module; add ESD protection components to the ESD sensitive interfaces and points in the product design.

Table 22: Electrostatic Discharge Characteristics (Unit: kV)

Model	Test Result	Reference Standard
Human Body Model	±4	*ESDA/JEDEC JS-001-2017*
Charge Device Model	±1	*ESDA/JEDEC JS-002-2018*

7 Mechanical Information

This chapter describes the mechanical dimensions of the module. All dimensions are measured in millimeter (mm), and the dimensional tolerances are ±0.1 mm unless otherwise specified.

7.1. Mechanical Dimensions

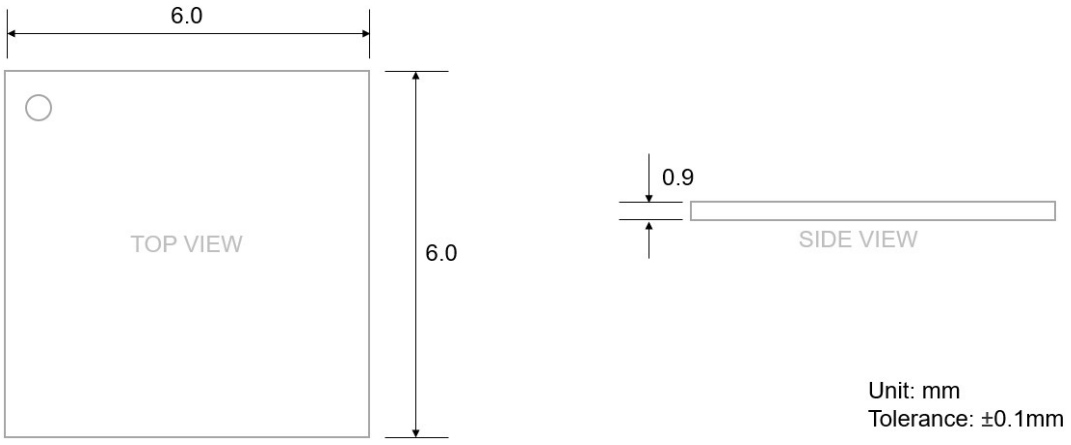

Figure 18: Top and Side Dimensions

7.2. Recommended Footprint

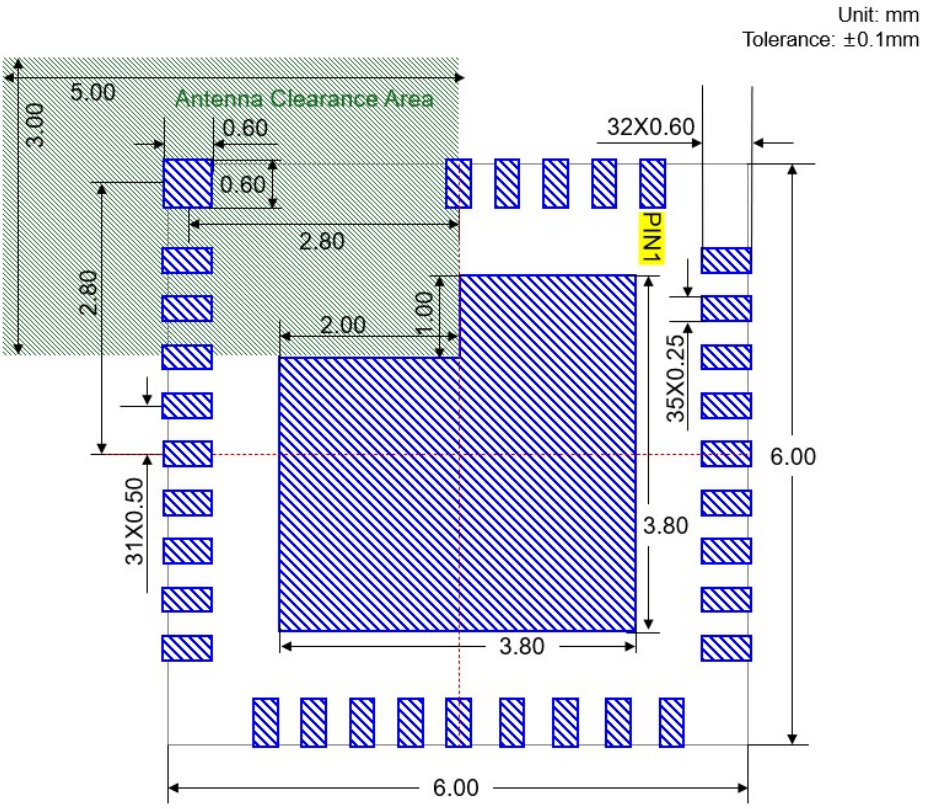

Figure 19: Recommended Footprint

NOTE

Keep at least 2 mm between the module and other components on the motherboard to improve soldering quality and maintenance convenience.

7.3. Top View

Figure 20: Top View

NOTE

Image above is for illustration purpose only and may differ from the actual module. For authentic appearance and label, please refer to the module received from Quectel.

8 Storage, Manufacturing and Packaging

8.1. Storage Conditions

The storage/shelf life of the module in a vacuum-sealed packaging is 12 months under conditions of temperature < 40 °C and relative humidity < 90%.

NOTE

1. To avoid blistering, layer separation and other soldering issues, extended exposure of the module to the air is forbidden.
2. Take out the module from the package and put it on high-temperature-resistant fixtures before baking. If shorter baking time is desired, see *IPC/JEDEC J-STD-033* for the baking procedure.
3. Pay attention to ESD protection, such as wearing anti-static gloves, when touching the modules.

8.2. Manufacturing and Soldering

The recommended peak reflow temperature should be 235–245 ºC, with 250 ºC as the absolute maximum reflow temperature. To avoid damage to the module caused by repeated heating, it is recommended that the module should be mounted only after reflow soldering for the other side of PCB has been completed. The recommended reflow soldering thermal profile (lead-free reflow soldering) and related parameters are shown below. It is recommended to use a reflow oven with over 10 temperature zones.

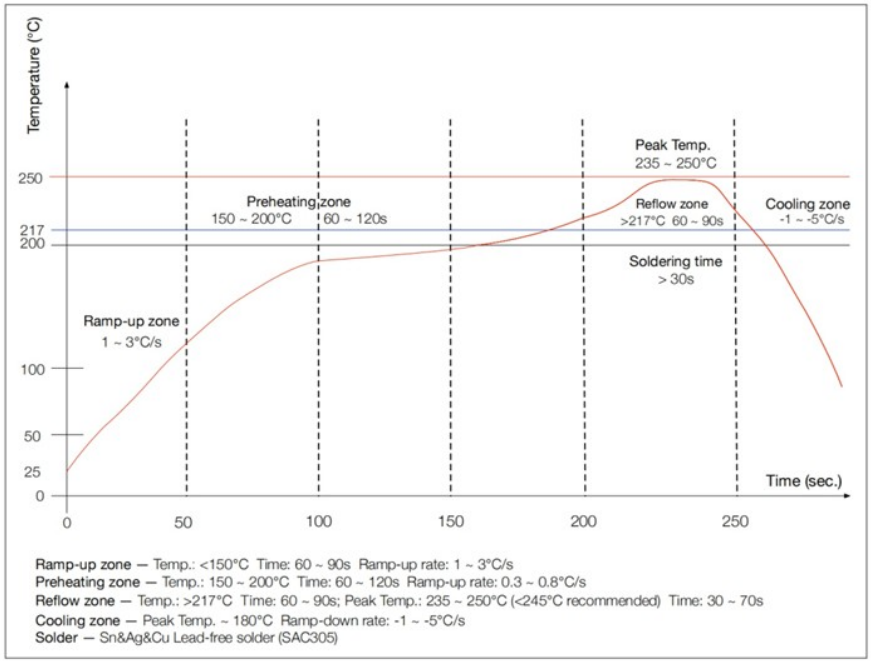

Figure 21: Recommended Reflow Soldering Thermal Profile

Table 23: Recommended Thermal Profile Parameters

Factor	Recommended Value
Ramp-up Zone	
Ramp-to-soak Slope	1 – 3 °C/s
Ramp-up Time	60 – 90 s
Reflow Zone	
Reflow Time (D: over 217° C)	60 – 90 s
Max Temperature	235 – 250 °C
Cool-down Slope	-1 – -5 °C/s
Reflow Cycle	
Max Reflow Cycle	1

8.3. Packaging Specifications

This chapter outlines the key packaging parameters and processes. All figures below are for reference purposes only, as the actual appearance and structure of packaging materials may vary in delivery.

The modules are packed in a tape and reel packaging as specified in the sub-chapters below.

8.3.1. Carrier Tape

Carrier tape dimensions are illustrated in the following figure and table:

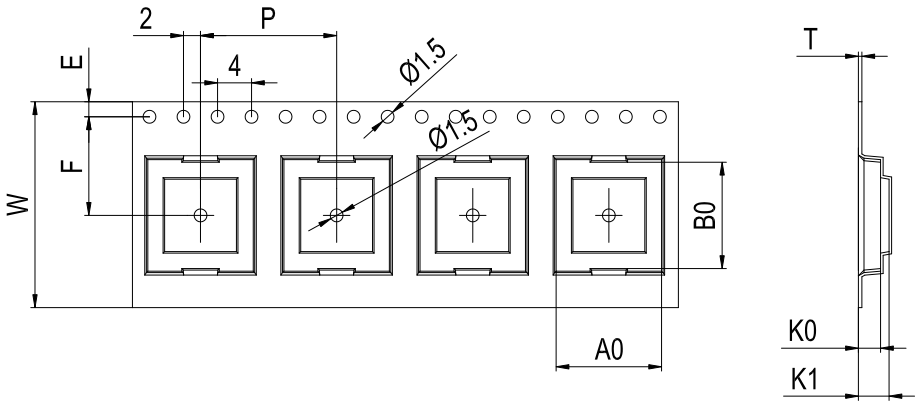

Figure 22: Carrier Tape Dimension Drawing (Unit: mm)

Table 24: Carrier Tape Dimension Table (Unit: mm)

W	P	T	A0	B0	K0	K1	F	E
16	12	0.3	6.3	6.3	1.1	-	7.5	1.75

8.3.2. Plastic Reel

Plastic reel dimensions are illustrated in the following figure and table:

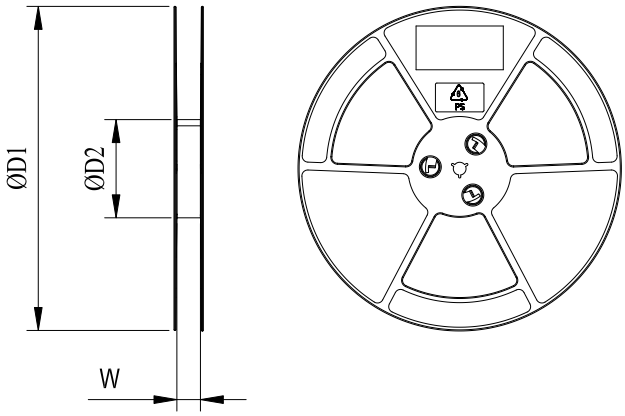

Figure 23: Plastic Reel Dimension Drawing

Table 25: Plastic Reel Dimension Table (Unit: mm)

øD1	øD2	W
330	100	16

8.3.3. Mounting Direction

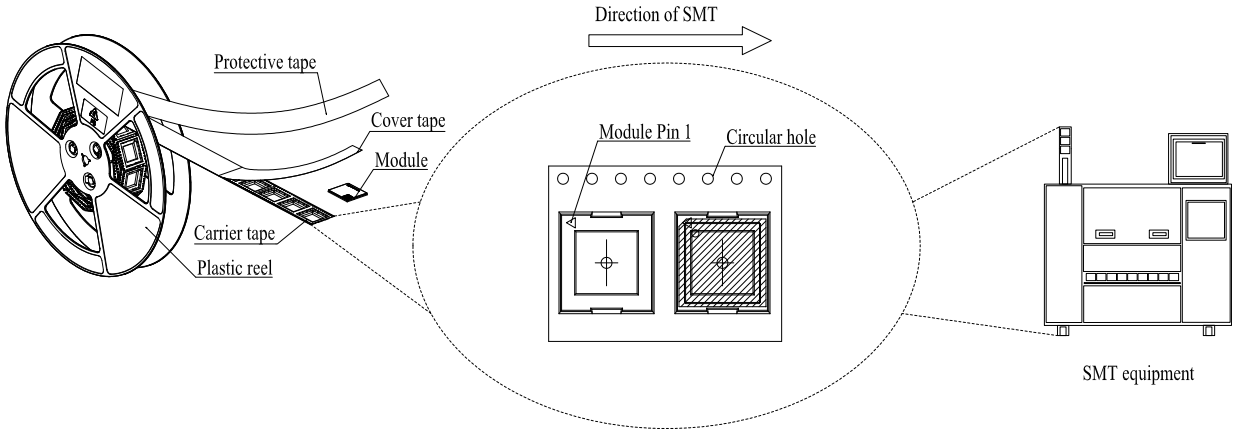

Figure 24: Mounting Direction

8.3.4. Packaging Process

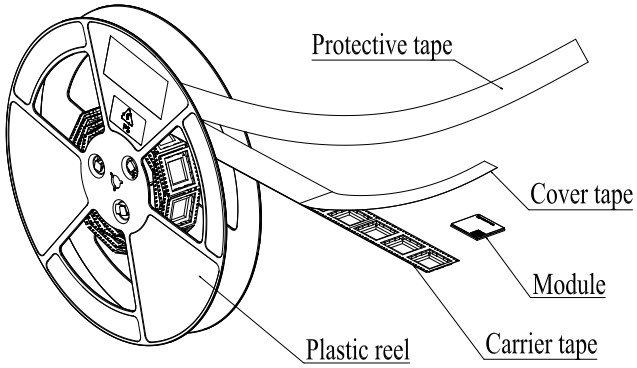

Place the modules onto the carrier tape cavity and cover them securely with cover tape. Wind the heat-sealed carrier tape onto a plastic reel and apply a protective tape for additional protection. 1 plastic reel can pack 3000 modules.

Place the packaged plastic reel, humidity indicator card and desiccant bag into a vacuum bag, and vacuumize it.

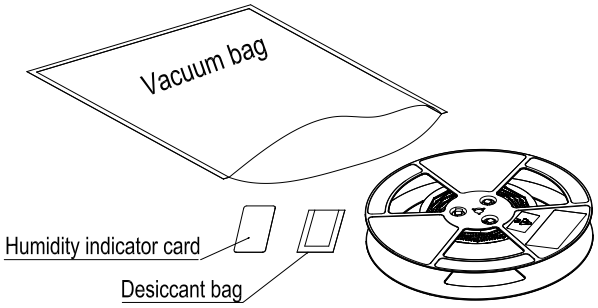

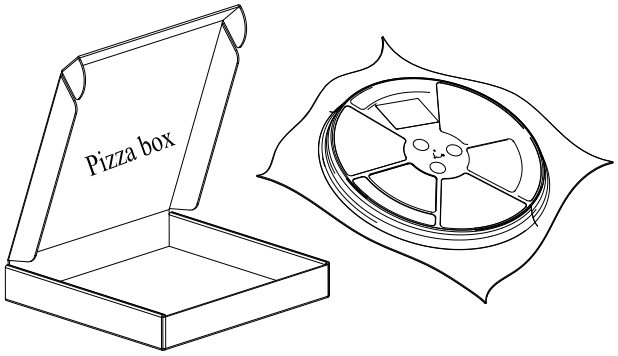

Place the vacuum-packed plastic reel into a pizza box.

Place the 4 packaged pizza boxes into 1 carton and seal it. 1 carton can pack 12000 modules.

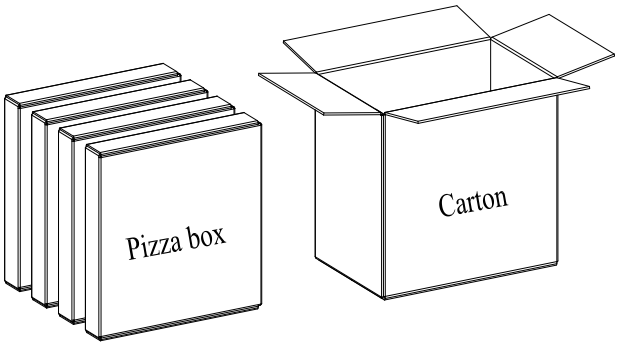

Figure 25: Packaging Process

9 Appendix References

Table 26: Related Documents

Document Name
[1] Quectel_HSM110XC_TE-B_User_Guide
[2] Quectel_RF_Layout_Application_Note

Table 27: Terms and Abbreviations

Abbreviation	Description
ARM	Advanced RISC Machine
BLE	Bluetooth Low Energy
DMA	Direct Memory Access
EFUSE	Electronic Fuse
ESD	Electrostatic Discharge
GFSK	Gauss Frequency Shift Keying
GND	Ground
GPIO	General-Purpose Input/Output
I/O	Input/Output
I2C	Inter-Integrated Circuit
I2S	Inter-IC Sound
Mbps	Million Bits Per Second
MCU	Microcontroller Unit
PCB	Printed Circuit Board

PWM	Pulse Width Modulation
RAM	Random-Access Memory
RCOSC	Resistor-Capacitor Oscillator
RF	Radio Frequency
RoHS	Restriction of Hazardous Substances
SIP	System in Package
SPI	Serial Peripheral Interface
SRAM	Static Random-Access Memory
TVS	Transient Voltage Suppressor
UART	Universal Asynchronous Receiver/Transmitter
V_{IH}	High-level Input Voltage
V_{IL}	Low-level Input Voltage
Vmax	Maximum Voltage
Vmin	Minimum Voltage
Vnom	Nominal Voltage
V_{OH}	High-level Output Voltage
V_{OL}	Low-level Output Voltage
VSWR	Voltage Standing Wave Ratio

FCC Statement FCC ID: XMRHSM110XC

Warning: Changes or modifications to this unit not expressly approved by the party responsible for compliance could void the user's authority to operate the equipment.

NOTE: This equipment has been tested and found to comply with the limits for a Class B digital device, pursuant to Part 15 of the FCC Rules. These limits are designed to provide reasonable protection against harmful interference in a residential installation. This equipment generates, uses and can radiate radio frequency energy and, if not installed and used in accordance with the instructions, may cause harmful interference to radio communications.

However, there is no guarantee that interference will not occur in a particular installation. If this equipment does cause harmful interference to radio or television reception, which can be determined by turning the equipment off and on, the user is encouraged to try to correct the interference by one or more of the following measures:

- Reorient or relocate the receiving antenna.
- Increase the separation between the equipment and receiver.
- Connect the equipment into an outlet on a circuit different from that to which

the receiver is connected.

- Consult the dealer or an experienced radio/TV technician for help

The device must not be co-located or operating in conjunction with any other antenna or transmitter.

This device complies with Part 15 of the FCC Rules. Operation is subject to the following two conditions : (1) this device may not cause harmful interference, and (2) this device must accept any interference received, including interference that may cause undesired operation.

FCC Radiation Exposure Statement

This equipment should be installed and operated with minimum distance 20cm between the radiator and your body.

Does not comply with the use restrictions of the product:

Portable devices used close with human's body (within 20cm), Like Cell phone, Notebook etc.

Note: This module has no RF shield. Un-shielded circuitry may cause receiver performance degradation or end-product emission risks. Host integrator is responsible for layout, mitigation and end-product compliance.

1. General Compliance Statement

This wireless module has obtained FCC modular certification in accordance with 47 CFR Part 15.212 and KDB 996369 D03 V01. The module is a standalone radio frequency transmitting device. All integration and application behaviors of the host integrator must strictly comply with the specifications in this manual. Any integration beyond the authorized scope will automatically invalidate the FCC certification of the module.

2. Applicable FCC Rules (KDB 996369 D03-2.2)

This modular transmitter is authorized under **Applicable FCC Part 15 Subpart C 15.247 & 15.209** .

Important Note: The module FCC grant only covers the intentional radiator performance of the module. It does not extend the Part 15B unintentional radiator compliance to the final host system. The OEM host integrator shall independently complete the Part 15B EMI test and compliance certification for the complete host product.

3. Specific Operational Integration Conditions (KDB 996369 D03-2.3)

All host integration and application scenarios must meet the following fixed conditions. No unauthorized modification is allowed.

1. **Application Scenario Restriction**: The module is only allowed to be installed in **fixed or mobile host devices**. Integration and use in portable handheld, wearable body-worn devices are prohibited without additional FCC authorization.

2. **Power Supply Specification**: The host device shall provide a stable rated working voltage of **3.3 V** for the module. The module is equipped with a built-in power regulation circuit. The host shall not modify, replace or reconstruct the module power supply circuit and peripheral power distribution structure.

3. **Hardware & Signal Restriction**: The module PCB layout, shielding structure, component layout and signal input interface are fixed and certified. The host shall not modify PCB wiring, remove

shielding parts, alter component parameters, or amplify/remodulate RF-related signal input. All hardware and firmware modifications are strictly prohibited.

4. **Co-location Restriction**: This transmitter shall not be co-located or operated simultaneously with any other radio transmitters, antennas or RF modules in the same host device, unless the host completes official FCC multi-transmitter co-location evaluation and obtains approval.

4. Limited Module Special Provisions

Important Limited Module Mandatory Rule: This product is a FCC limited modular transmitter, and the following provisions are mandatory and shall not be omitted.

If this is a limited modular transmitter, the host OEM integrator must obtain written integration approval from the module grantee before integrating the module into any host product. For new host model integration, the integrator shall complete FCC Class-II Permissive Change filing and approval.

6. RF Exposure Compliance Requirements (KDB 996369 D03-2.6)

1. The certified minimum separation distance between the module antenna and human body is **20 cm**. The host mechanical and structural design must ensure that this safety distance is always maintained during normal device operation.

2. The module RF exposure evaluation is only applicable to fixed and mobile device scenarios. If the module is integrated into portable body-worn devices with a working distance less than 20cm, the host integrator must complete independent SAR testing and FCC RF exposure certification.

3. The host final product user manual must be added with official RF exposure warning statements to meet FCC regulatory requirements.

Recommended End-user Manual RF Exposure Statement

This equipment complies with FCC RF radiation exposure limits set forth for an uncontrolled environment. This equipment should be installed and operated with a minimum distance of **20 cm** between the radiator and your body.

7. Antenna Compliance Specifications (KDB 996369 D03-2.7)

Only the certified matching antenna can be used with this module. Unauthorized replacement and

modification are prohibited.

Antenna Parameter	Certified Specification
Antenna Type	Chip antenna
Maximum Antenna Gain	1 dBi
Antenna Impedance	50Ω
Connector Type	RF connectors and cables by I-PEX are recommended. For more details, visit https://www.i-pex.com

1. Generic vague descriptions (such as omnidirectional antenna) are not acceptable for FCC audit. The antenna type must be clearly defined.

2. It is strictly prohibited to replace the antenna, adjust antenna gain, extend antenna cable, or add antenna splitters and auxiliary antenna devices.

3. The host must use the certified fixed connector type, and no adaptive modification of the interface is allowed.

8. Labeling Compliance Requirements (KDB 996369 D03-2.8)

1. The module shall retain the original permanent FCC ID label, which shall not be removed, modified or covered.

2. The final host product shall be permanently and clearly marked with the statement: **Contains FCC ID: XMRHSM110XC**. The marking can adopt physical label or electronic label that complies with KDB 784748 specification.

3. The host product shall not independently use the module's FCC ID as the host's own certification ID. All host-level compliance responsibilities are undertaken by the OEM integrator.

9. Testing & Verification Guidance (KDB 996369 D03-2.9)

1. The OEM integrator shall obtain the module RF test mode authority to verify the RF performance after host integration.

2. After module integration, the host must complete independent Part 15B conducted and radiated

emission tests for unintentional radiation.

3. If the host has multiple transmitters co-located, a complete multi-transmitter co-location evaluation test must be performed.

4. If the host application scenario, power supply, antenna and other conditions exceed the module certification authorization scope, the integrator must apply for FCC Class-II Permissive Change or re-certification.

The test plan shall confirm and demonstrate compliance with the following:

✓ Confirm and document the continued compliance for the fundamentals for each band under each specific rule part granted for the module.

✓ The test shall demonstrate each band's worst-case modulation mode(s).

✓ Test band edge compliance for the widest and narrowest bandwidths per modulation type. ✓ Include radiated spurious emissions with the antenna connected. Testing shall be performed for each supported modulation testing 15.31(m). In all cases, a test of each modulation is required for channels over the frequency range defined in 15.33(a) for unlicensed transmitters and 2.1057(a) for licensed transmitters.

✓ Confirm and demonstrate with the radiated test that no additional parasitic, non-compliant emissions exist due to ingress (parasitic oscillations, radiation of stray signals within a host, etc.) are present.

✓ These tests can be based on C63.10 and C63.26 as guidance:

Examples: The devices that support Bluetooth LE all bandwidths, and data rates. Testing may be documented for a limited selection of Bluetooth LE modes for worst-case GFSK subcarrier or tone arrangements. The worst-case modes can be selected from the radio module's initial test report. The widest bandwidth, highest aggregate power, and highest power spectral density should be tested. If these conditions do not all combine in the same mode, then multiple modes require testing until the modes with these three parameters have been tested and confirmed. Compliance testing is necessary if the manufacturer does not identify the worst-case settings for each modulation and data rate.

10. Compliance Responsibility Division (KDB 996369 D03-2.10)

1. The module manufacturer (grantee) is only responsible for the standalone RF compliance of the module itself, and is not responsible for any system-level compliance problems caused by host improper integration.

2. The OEM host integrator bears full responsibility for all system-level compliance of the final product, including but not limited to: host EMI/EMC compliance, Part15B compliance, RF exposure/SAR evaluation, labeling compliance, multi-transmitter co-location compliance, and filing of necessary permit changes.

3. Any failure to follow this integration manual will result in the invalidation of the module's FCC certification in the host system, and all related risks and liabilities shall be borne by the host integrator.

IC Statement IC:10224A-HSM110XC

This device complies with Industry Canada license-exempt RSS standard(s). Operation is subject to the following two conditions: (1) this device may not cause interference, and (2) this device must accept any interference, including interference that may cause undesired operation of the device. Le présent appareil est conforme aux CNR d'Industrie Canada applicables aux appareils radio exempts de licence. L'exploitation est autorisée aux deux conditions suivantes :(1) l'appareil ne doit pas produire de brouillage, et (2) l'utilisateur de l'appareil doit accepter tout brouillage radioélectrique subi, même si le brouillage est susceptible d'en compromettre le fonctionnement. The device is compliance with RF field strength limits, users can obtain Canadian information on RF exposure and compliance.

IC Radiation Exposure Statement

This equipment complies with IC radiation exposure limits set forth for an uncontrolled environment. This equipment should be installed and operated with minimum distance 20cm between the radiator & your body.

Déclaration d' exposition aux radiations:

Cet équipement est conforme aux limites d’ exposition aux rayonnements IC établies pour un environnement non contrôlé. Cet équipement doit être installé et utilisé avec un minimum de 20 cm de distance entre la source de rayonnement et votre corps.

The Bluetooth module is designed to comply with the ISED statement. The module ID is 10224A-HSM110XC. The host system using HSM110XC, should have label indicatedit contain modular's IC :10224A-HSM110XC.This radio module must not installed to co-locate and operating simultaneously with otherradios in host system, additional testing and equipment authorization should be requiredto operating simultaneously with other radio.Le module HSM110XC est concu pour se conformer a la declaration ISDE. Le numerod'identification du module est 10224A-HSM110XC tte indiquant qu'il contient l'IC modulaire: 10224A-HSM110XC.Ce module radio ne doit pas etre installe pour co-localiser et fonctionner simultanementavec d'autres radios dans le systeme hote, des tests supplementaires et une autorisationd'equipement peuvent etre necessaires pour fonctionner simultanement avec d'autresradios.

End Product Labeling
This transmitter module is authorized only for use in device where the antenna may be installed such that20 cm may be maintained between the antenna and users. The final end product must belabeled in a visible area with the following: “Contains IC:10224A-HSM110XC".

Étiquetage du produit final
Ce module émetteur n’est autorisé que pour une utilisation dans un dispositif où l’antenne peut être installée de telle sorte que 20 cm puissent être maintenus entre l’antenne et les utilisateurs. Le produit final doit être étiqueté dans une zone visible avec la mention suivante: “contient IC:10224A-HSM110XC”.

PMN: QUECTEL HSM110XC