Wireless Device Over the Air Performance Test Report

REPORT NO.		OQ352515
APPLICANT	:	Withings
MANUFACTURER	:	TSMT - Regent Electron (Suzhou) Co., LTD
EQUIPMENT	:	Antenna
DATE OF RECEIPT	:	May 26, 2023
DATE OF TEST	:	May 26, 2023
ISSUE DATE	:	June 13, 2023

Reviewed by:

Tim Kao / Vice Manager

We, SPORTON INTERNATIONAL INC., would like to declare that the tested sample has been evaluated in accordance with the procedures and shown the compliance with the applicable technical standards.

The test results in this report apply exclusively to the tested model / sample. Without written approval of SPORTON INTERNATIONAL INC., the test report shall not be reproduced except in full.

The declared product specification for EUT presented in this report is provided by the manufacturer / applicant, and the manufacturer / applicant takes all the responsibilities for the accuracy of product specification.

SPORTON INTERNATIONAL INC. EMC & WIRELESS COMMUNICATIONS LABORATORY

Table of Contents

Revision History ---------- **3**
1. Test Laboratory ---------- **4**
2. Client Information ---------- **4**
2.1 Applicant ---------- 4
2.2 Manufacturer ---------- 4
3. Equipment Under test(EUT) Information ---------- **5**
3.1 Description of EUT ---------- 5
4. Measurement Environment ---------- **6**
5. Summary of Test Results ---------- **8**
5.1 Declaration ---------- 8
5.2 Abbreviations and Definitions ---------- 8
5.3 Summary Table ---------- 9
Appendix A Pattern Plots ---------- **10**
2D Gain-FS_2400 MHz-X-Y ---------- 10
2D Gain-FS_2450 MHz-X-Y ---------- 11
2D Gain-FS_2500 MHz-X-Y ---------- 12
2D Gain-FS_2400 MHz-X-Z ---------- 13
2D Gain-FS_2450 MHz-X-Z ---------- 14
2D Gain-FS_2500 MHz-X-Z ---------- 15
2D Gain-FS_2400 MHz-Y-Z ---------- 16
2D Gain-FS_2450 MHz-Y-Z ---------- 17
2D Gain-FS_2500 MHz-Y-Z ---------- 18
3D Gain-FS_2400 MHz ---------- 19
3D Gain-FS_2450 MHz ---------- 20
3D Gain-FS_2500 MHz ---------- 21

Revision History

REPORT NO.	VERSION	DESCRIPTION	ISSUED DATE
OQ352515	1.0	Initial issue of report	June 13, 2023

1. Test Laboratory

Test Site	Sporton International Inc. EMC & Wireless Communications Laboratory
Telephone Number	TEL: +886-3-327-3456; FAX: +886-3-328-4978
Address	No.52, Huaya 1st Rd., Guishan Dist., Taoyuan City 333, Taiwan
Chamber	☐ OTA01-HY ☐ OTA03-HY ☐ OTA04-HY ■ OTA05-HY

■ : The chamber(s) which used to perform the test in this test report.

2. Client Information

2.1 Applicant

Company Name	Withings
Address	2 rue Maurice Hartmann 92130 Issy-Les-Moulineaux France

2.2 Manufacturer

Company Name	TSMT - Regent Electron (Suzhou) Co., LTD
Address	NO.888 Ganquan Dong Road, Economic Development Zone Wujiang City, Jiangsu Province, P.R.C, China
Telephone Number	+86-512-63401633

3. Equipment Under test(EUT) Information

3.1 Description of EUT

Product Feature & Specification	
EUT Type	Antenna
Brand Name	Wellink
Model Name	ASM-13251
Antenna Type	HWA Antenna

4. Measurement Environment

Ambient Condition

Temperature (°C):	25℃ +/- 5℃	Humidity (%):	<60%

Test Equipment List

Name	Manufacturer	Type/Model	Serial Number	Calibration	
				Last Cal.	Due Date
ENA Series Network Analyzer	Keysight	E5071C	MY46106276	2022/09/18	2023/09/17
RF Switch	Keysight	3499A	N/A	NCR	NCR
Multi-Axis Positioner Controller	ETS-Lindgren	2090	N/A	NCR	NCR
Medium-Duty Positioner	ETS-Lindgren	2015	N/A	NCR	NCR
Measurement Horn Antenna	EMCO	3164-10	00239261	NCR	NCR

Passive measurement setup

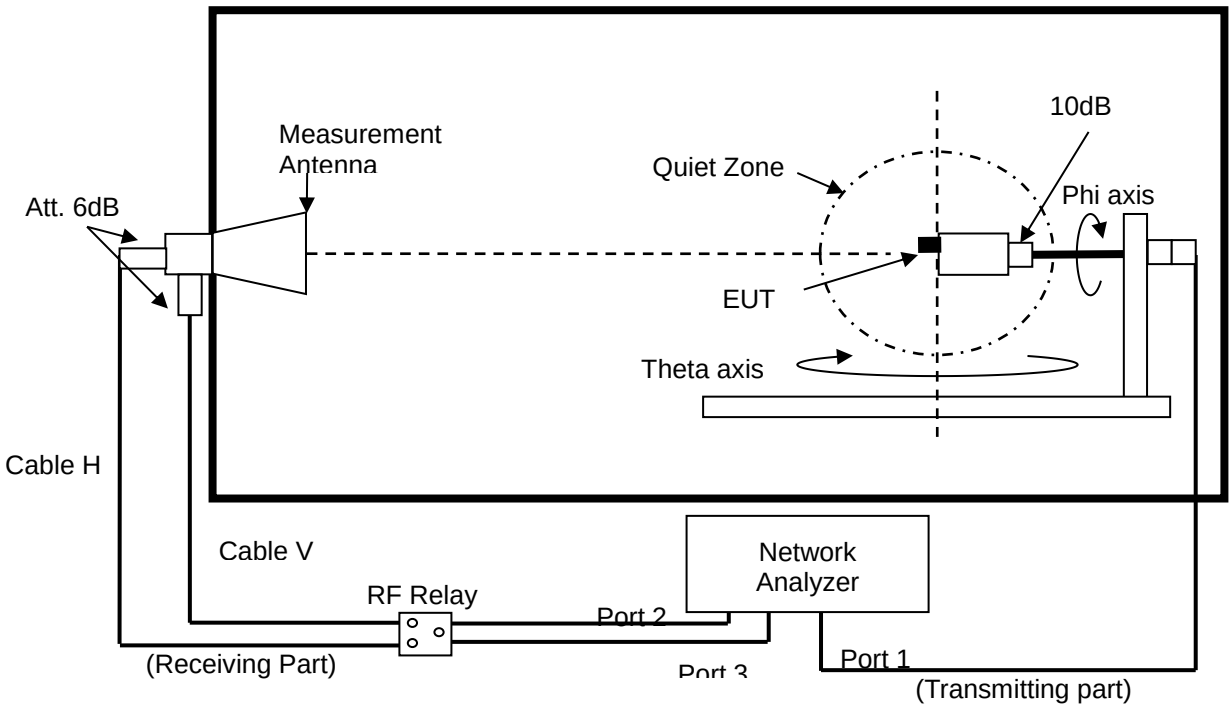

5. Summary of Test Results

5.1 Declaration

Declaration of Conformity:
The judgment of conformity in the report is based on the measurement results excluding the measurement uncertainty.
Comments and Explanations:
None

5.2 Abbreviations and Definitions

Please note the following abbreviations in this section:

FS = Free Space

5.3 Summary Table

ICC_HWA11_Gain_FS_2400~2500MHz						
Frequency (MHz)	Ant. Port Input Pwr. (dB)	Gain (dBi)	Directivity (dBi)	Efficiency (dB)	Efficiency (%)	VSWR
2400	0.0	0.60	5.44	-4.84	32.82	1.09
2450	0.0	0.82	5.43	-4.62	34.54	1.07
2500	0.0	1.11	5.39	-4.27	37.38	1.08

Appendix A Pattern Plots

2D Gain-FS_2400 MHz-X-Y

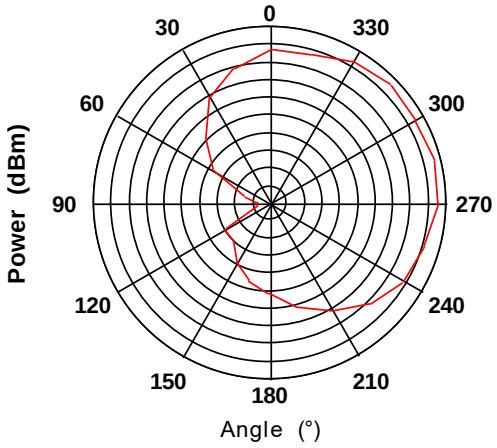

Max: -8
Min: -28
Scale: 2/div

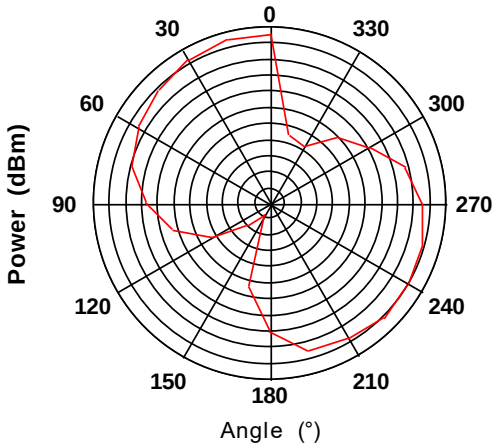

Max: -10
Min: -32
Scale: 2/div

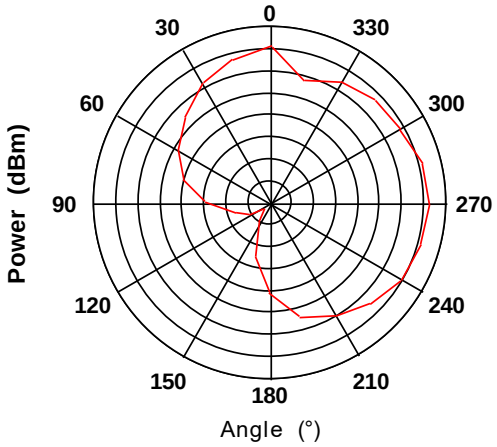

Max: -6
Min: -22
Scale: 2/div

2D Gain-FS_2450 MHz-X-Y

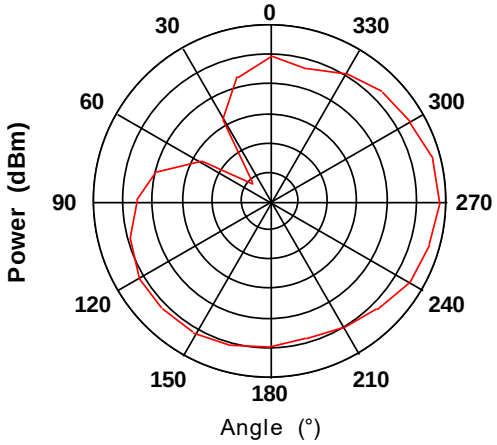

Max: -10
Min: -40
Scale: 5/div

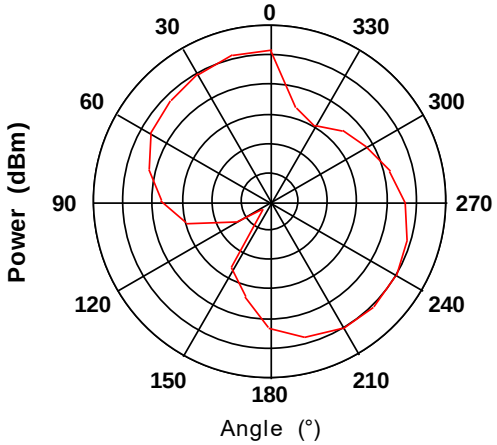

Max: -5
Min: -35
Scale: 5/div

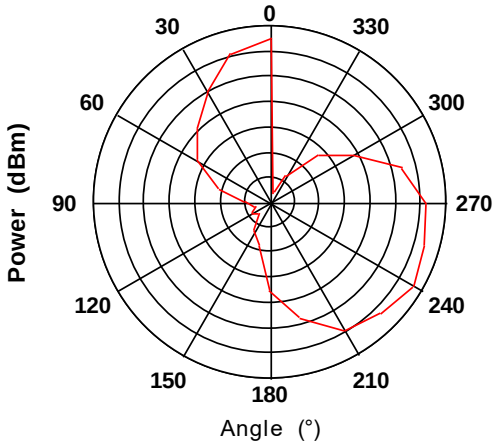

Max: -8
Min: -15
Scale: 1/div

2D Gain-FS_2500 MHz-X-Y

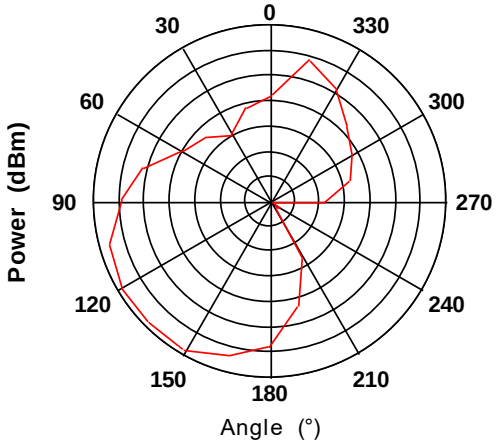

Max: -12
Min: -26
Scale: 2/div

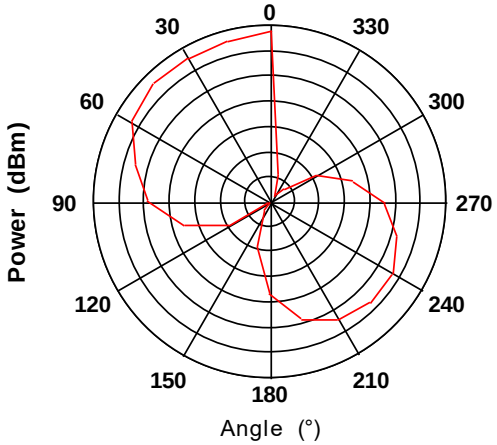

Max: -8
Min: -22
Scale: 2/div

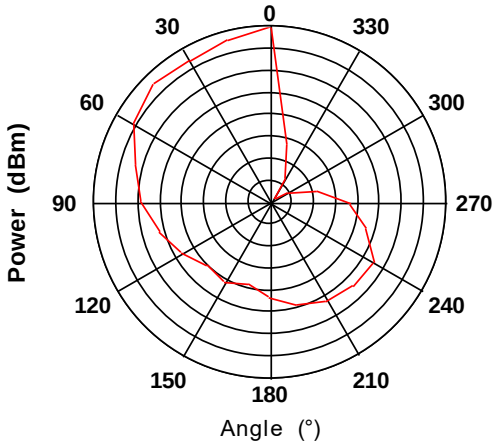

Max: -8
Min: -16
Scale: 1/div

2D Gain-FS_2400 MHz-X-Z

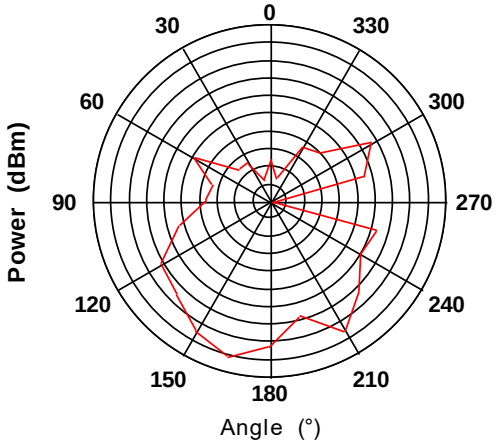

Max: 2
Min: -18
Scale: 2/div

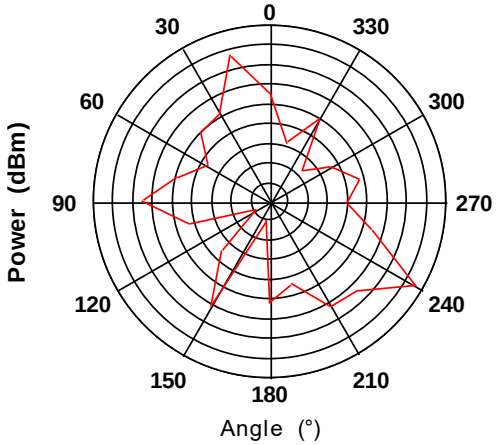

Max: -6
Min: -24
Scale: 2/div

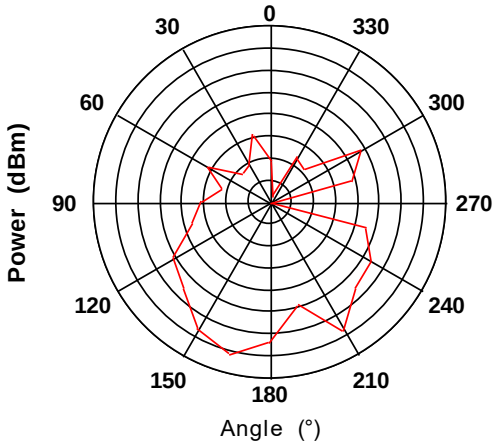

Max: 2
Min: -14
Scale: 2/div

2D Gain-FS_2450 MHz-X-Z

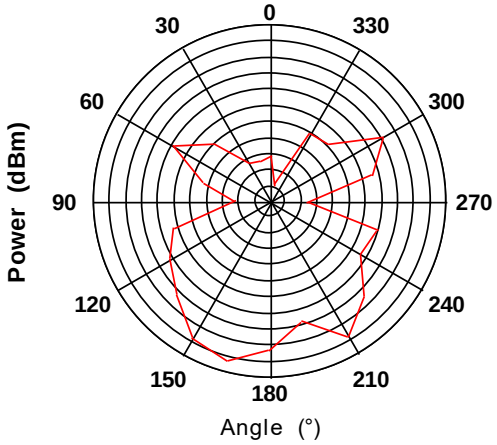

Max: 2
Min: -20
Scale: 2/div

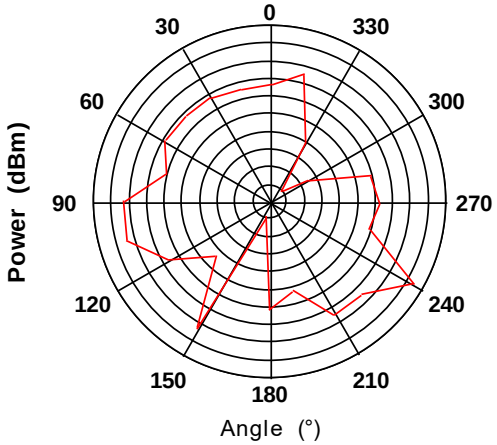

Max: -6
Min: -26
Scale: 2/div

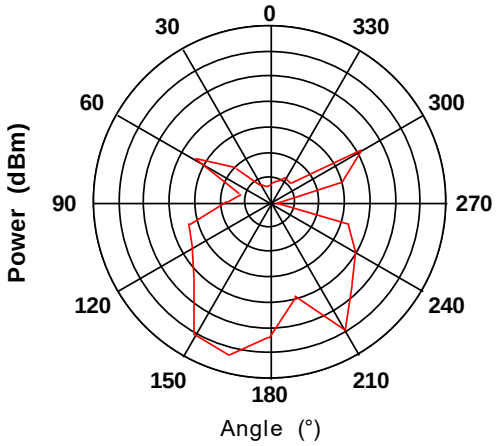

Max: 2
Min: -12
Scale: 2/div

2D Gain-FS_2500 MHz-X-Z

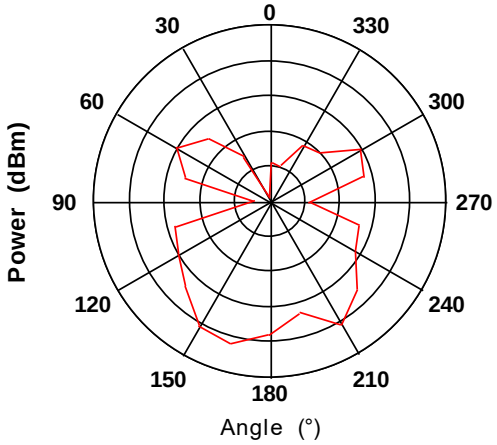

Max: 5
Min: -20
Scale: 5/div

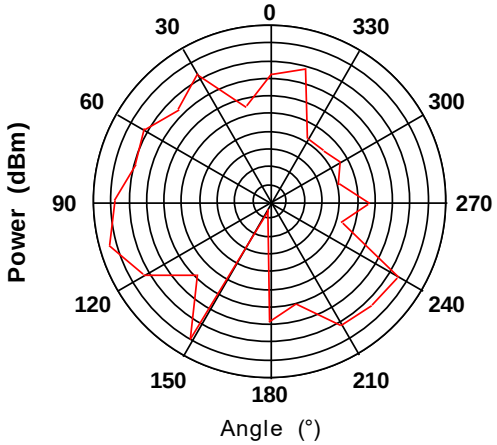

Max: -6
Min: -26
Scale: 2/div

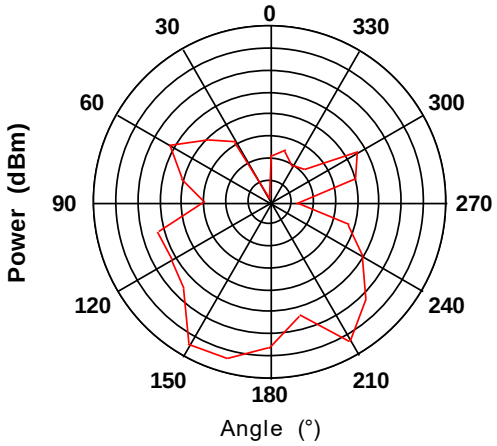

Max: 2
Min: -14
Scale: 2/div

2D Gain-FS_2400 MHz-Y-Z

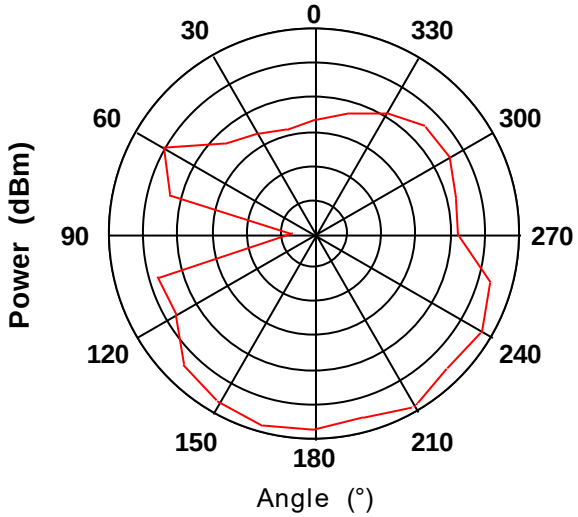

Max: 0
Min: -30
Scale: 5/div

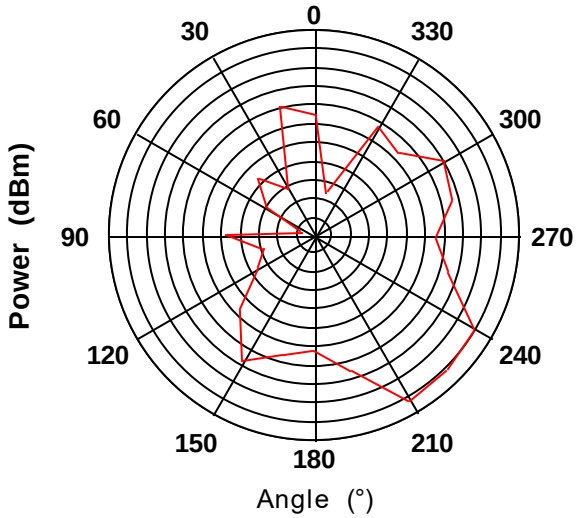

Max: -4
Min: -26
Scale: 2/div

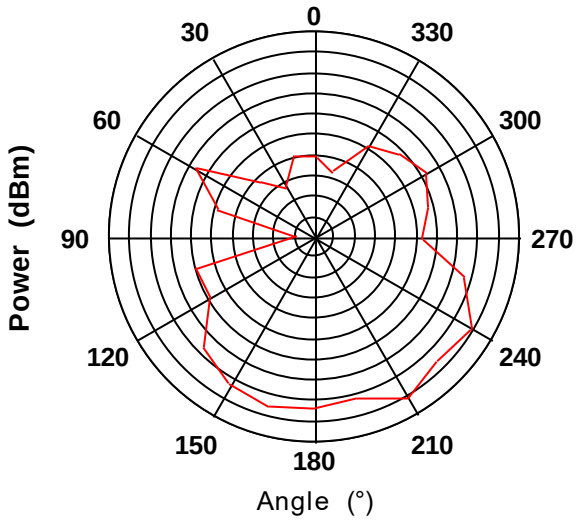

Max: 2
Min: -18
Scale: 2/div

2D Gain-FS_2450 MHz-Y-Z

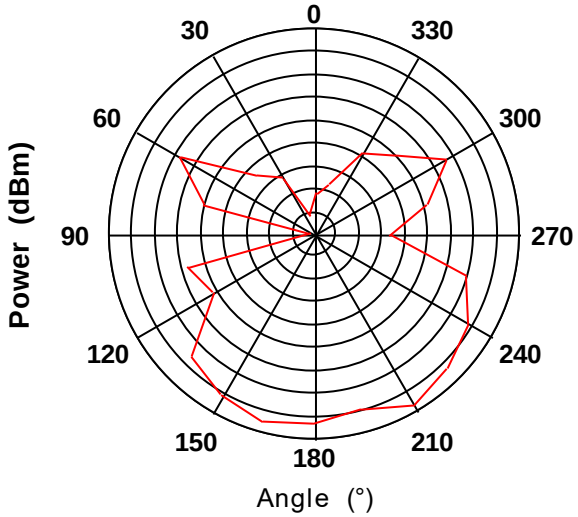

Max: 0
Min: -18
Scale: 2/div

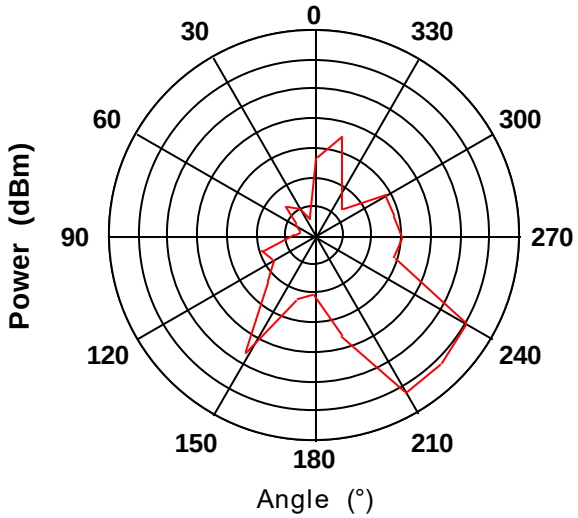

Max: -4
Min: -18
Scale: 2/div

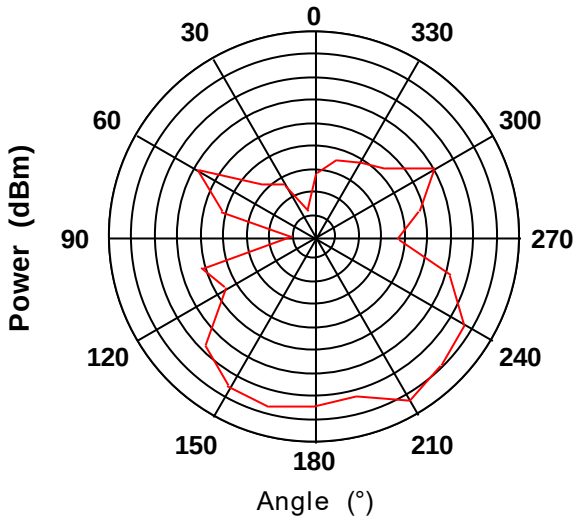

Max: 2
Min: -16
Scale: 2/div

2D Gain-FS_2500 MHz-Y-Z

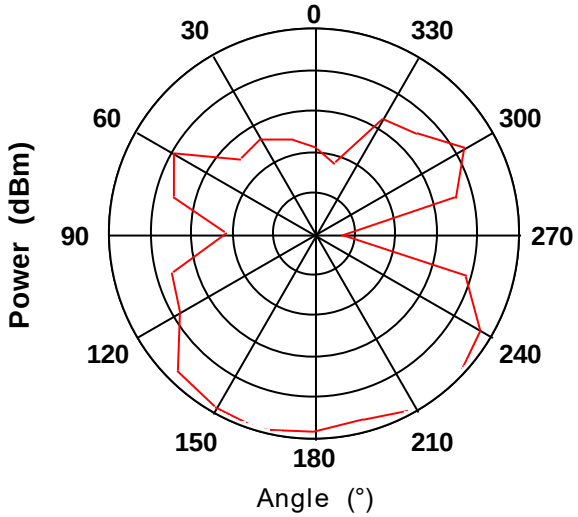

Max: 0
Min: -25
Scale: 5/div

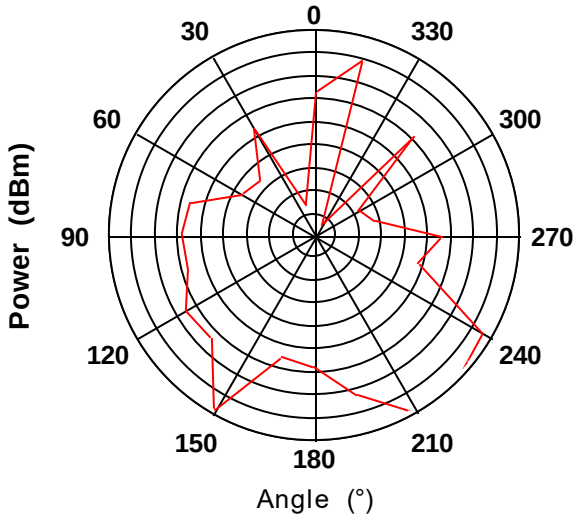

Max: -6
Min: -24
Scale: 2/div

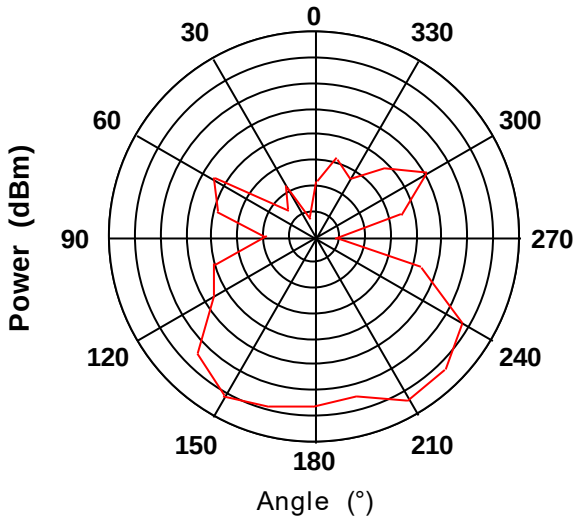

Max: 2
Min: -14
Scale: 2/div

3D Gain-FS_2400 MHz

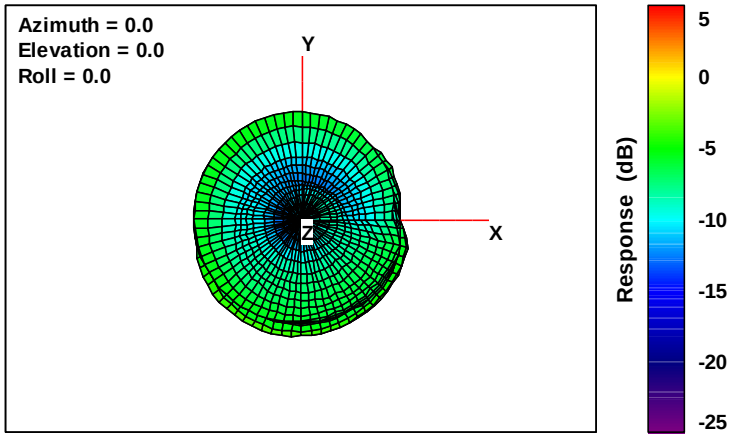

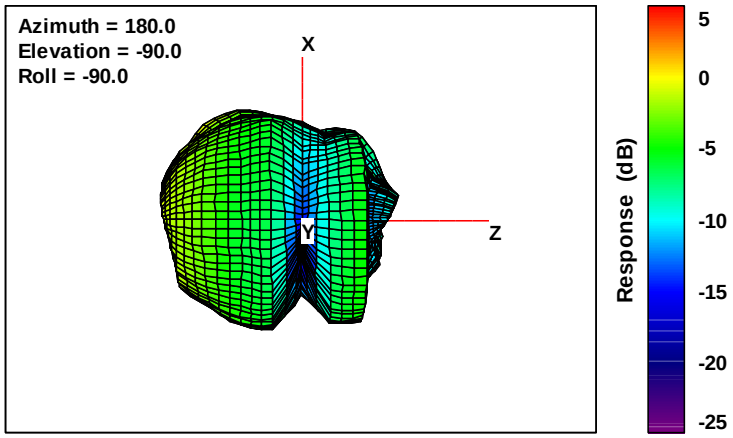

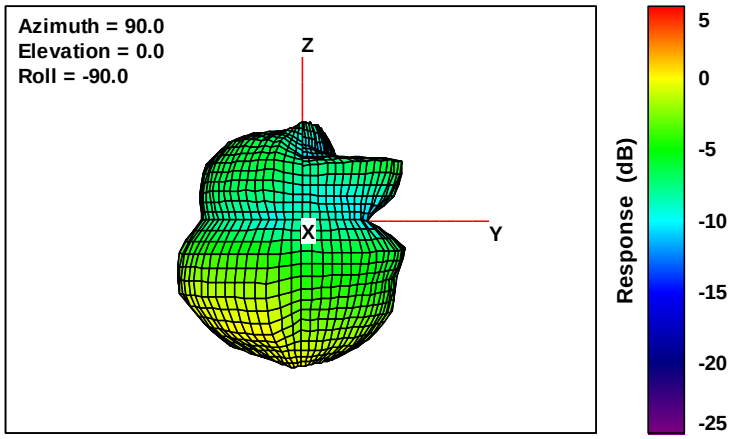

3D Gain-FS_2450 MHz

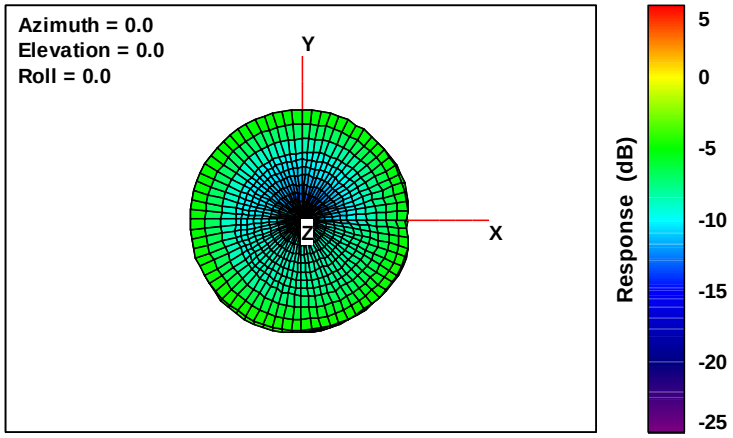

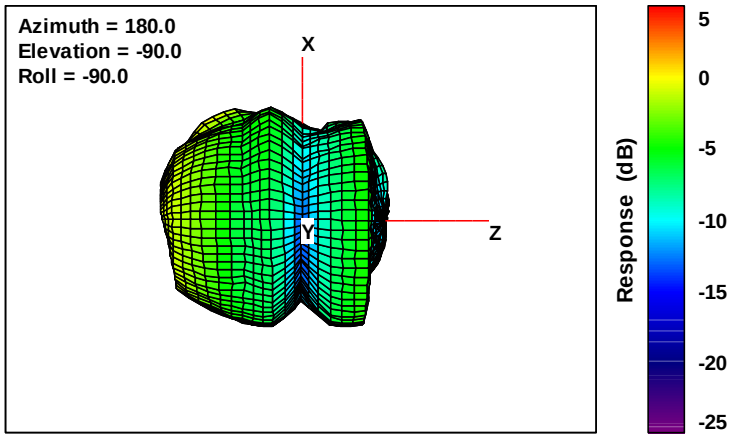

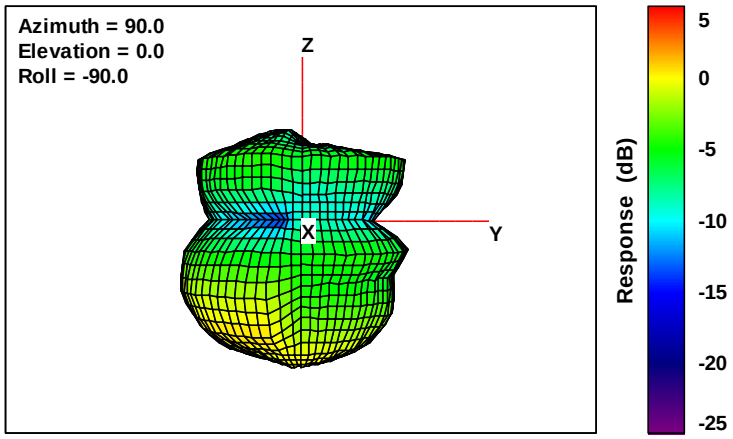
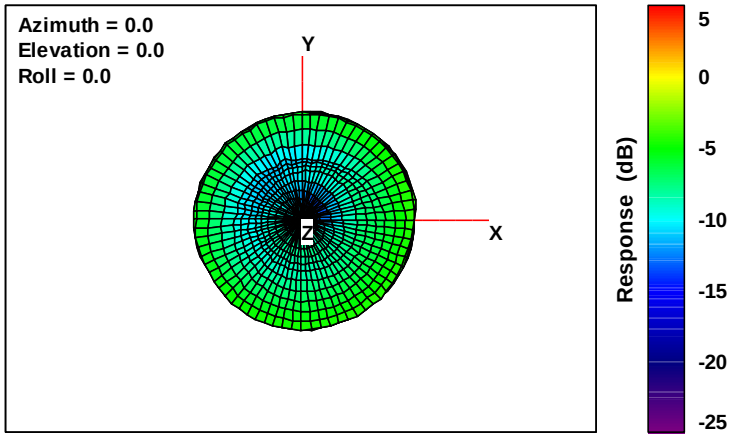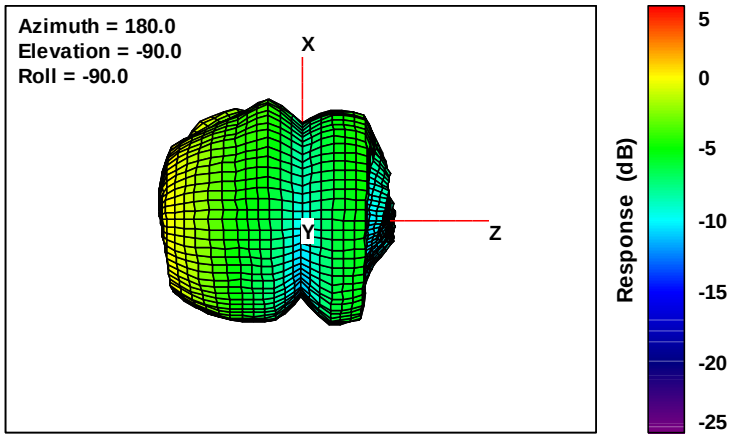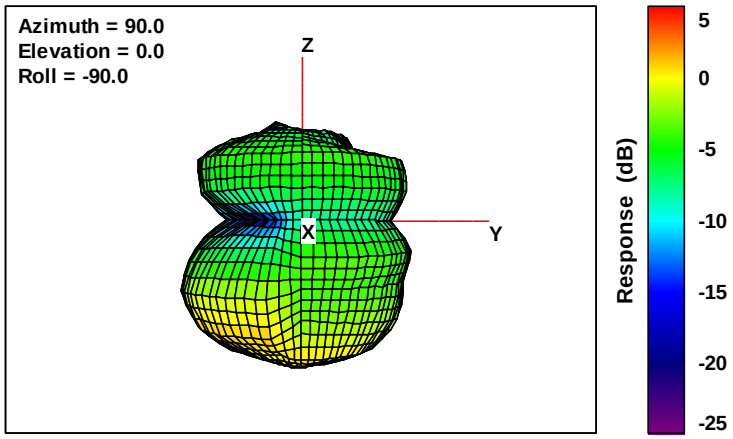
3D Gain-FS_2500 MHz