INSTRUCTION MANUAL

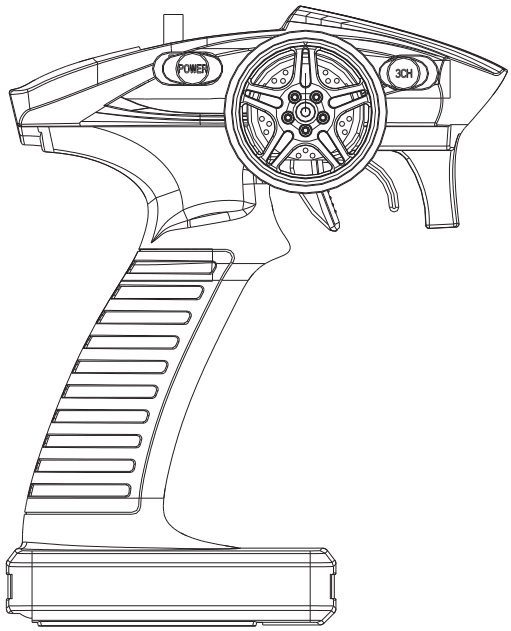

Install the batteries

(1) Remove the battery compartment cover.
(2) Replace the used batteries with new AA size batteries.

Please replace batteries when the power indicator blinks or the buzzer beeps.

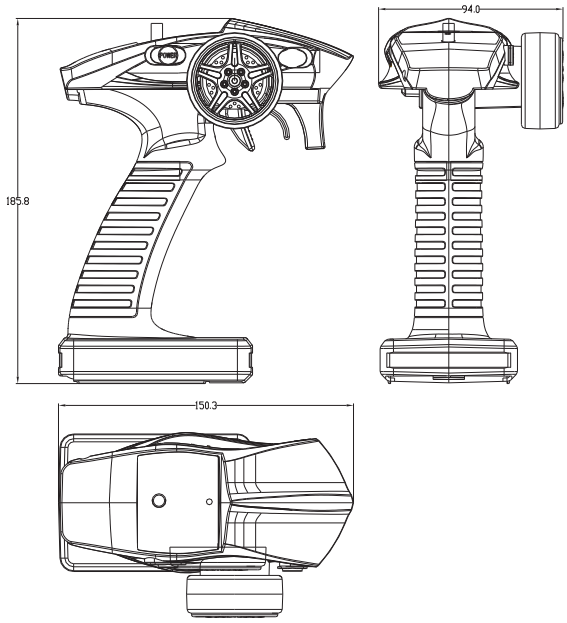

Function

ITEM NO
KTH:91900G-3

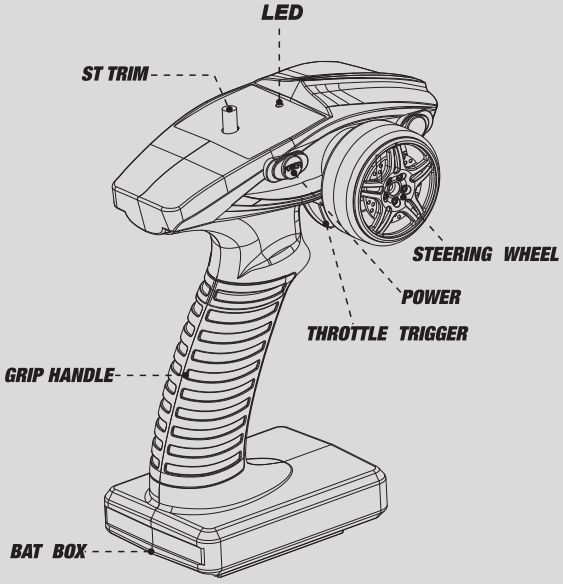

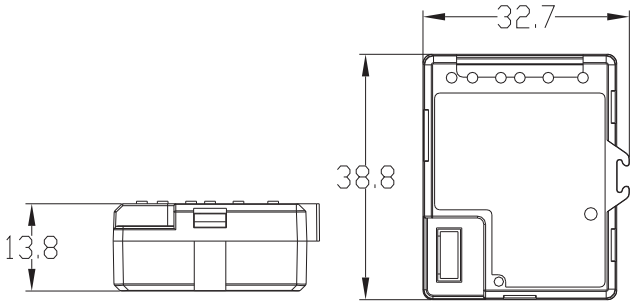

Transmitter Adjustment

A. Throttle Trigger

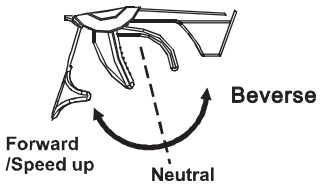

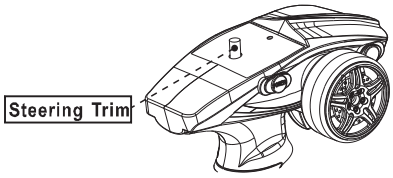

Keep the transmitter and receiver 40cm apart when operating.

Use the REV switches to reverse the steering or throttle operating direction.

1. Push the trigger forward to slow down or brake.
2. Pull the trigger backward to accelerate.

B. Steering Wheel

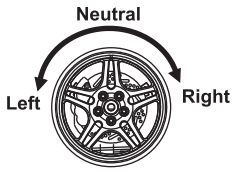

Steering Trim: If the front wheels do not align straight, use the steering trim to adjust.

Operating Procedure

- Before operation:First turn on the transmitter,then the receiver. Lastly,connect the drive battery to the control unit
- After operation:Disconnect the battery from the control unit. Turn the receiver off, and then the transmitter.

Binding the transmitter and receiver

Switch on the transmitter the Blue LED blinking is ready for pair. When it

Low battery alarm

Please replace batteries when the power indicator blinks.

Do not operate the radio system when the battery power is low.

connection diagram

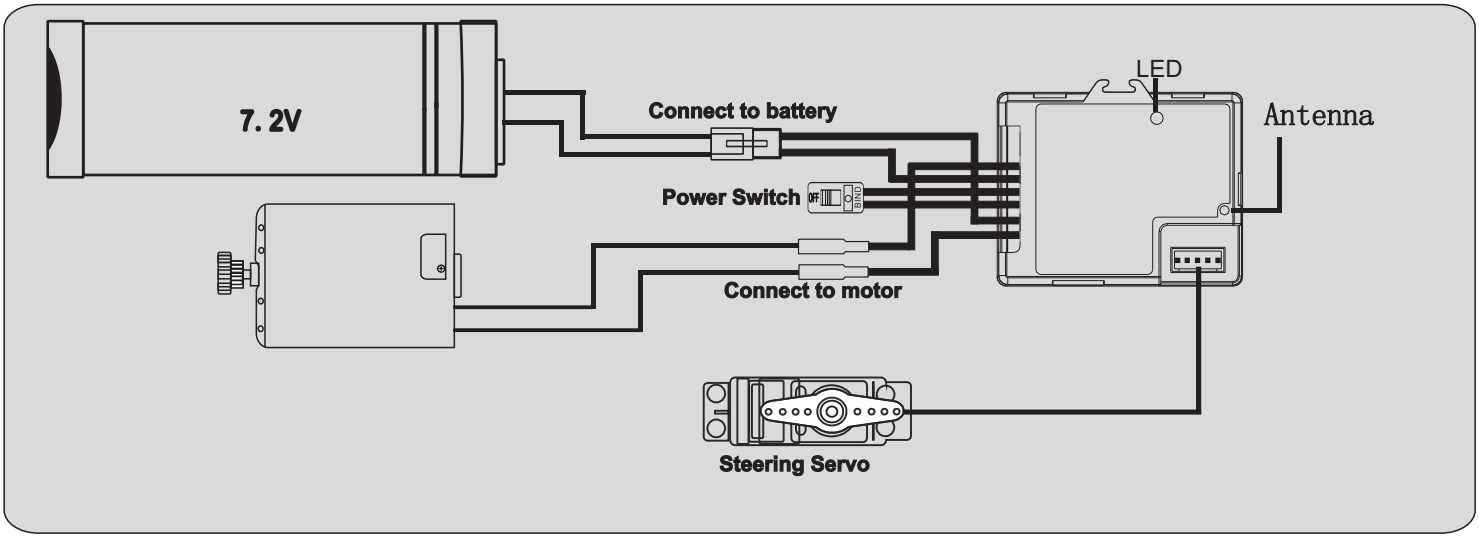

This device complies with Part 15 of the FCC Rules. Operation is subject to the following two conditions: (1) this device may not cause harmful interference, and (2) this device must accept any interference received, including interference that may cause undesired operation.

Changes or modifications not expressly approved by the party responsible for compliance could void the user's authority to operate the equipment.

NOTE: This equipment has been tested and found to comply with the limits for a Class B digital device, pursuant to Part 15 of the FCC Rules. These limits are designed to provide reasonable protection against harmful interference in a residential installation. This equipment generates, uses instructions, may cause harmful interference to radio communications. However, there is no guarantee that interference will not occur in a particular installation. If this equipment does cause harmful interference to radio or television reception, which can be determined by turning the equipment off and on, the user is encouraged to try to correct the interference by one or more of the following measures:

-- Reorient or relocate the receiving antenna.

-- Increase the separation between the equipment and receiver.

-- Connect the equipment into an outlet on a circuit different from that to which the receiver is connected.

-- Consult the dealer or an experienced radio/TV technician for help.