INSTRUCTION MANUAL

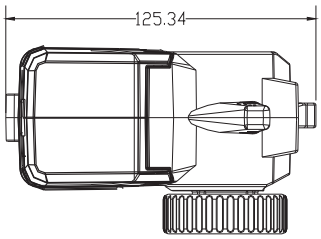

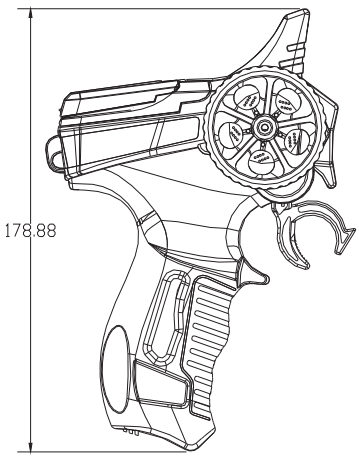

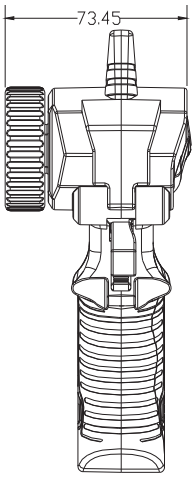

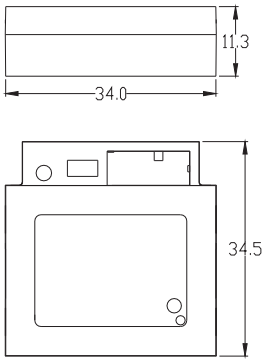

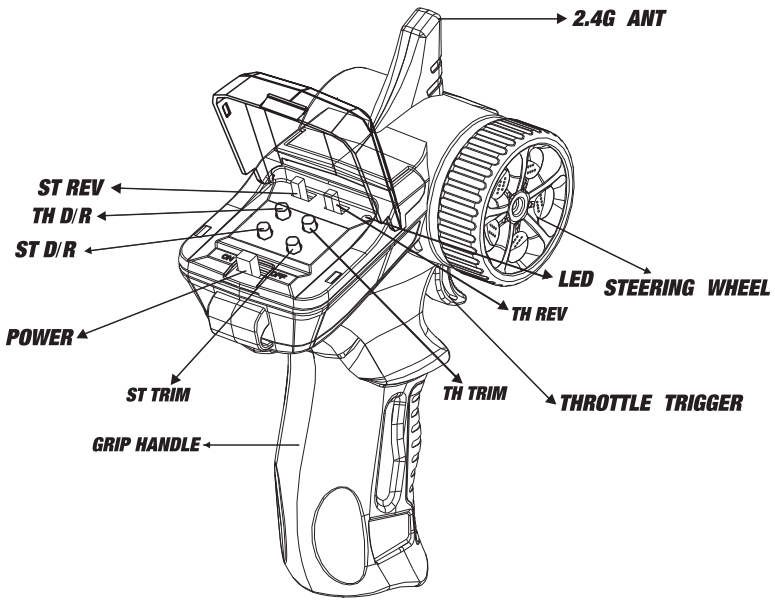

Binding the transmitter and receiver

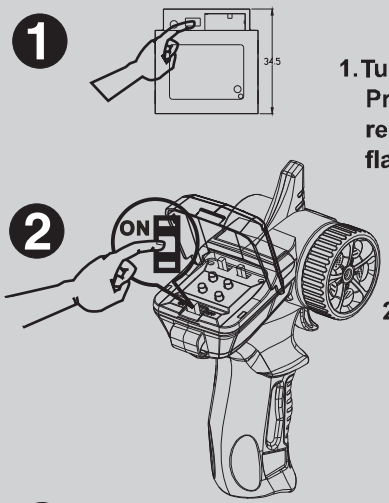

1. Turn on the receiver power. Press the **BIND** switch. The receiver's LED should start flashing.

2. Turn on the transmitter.

3. When the LED on the receiver becomes solid, the binding process is completed.

Buzzer tone warning of low voltage

When the LED flashing red light and the buzzer tone sounds at the same time is a safety warning, inform the voltage is below 4.6v. Please turn off the radio when you hear the buzzer tone warning, avoid affect the radio's performance.

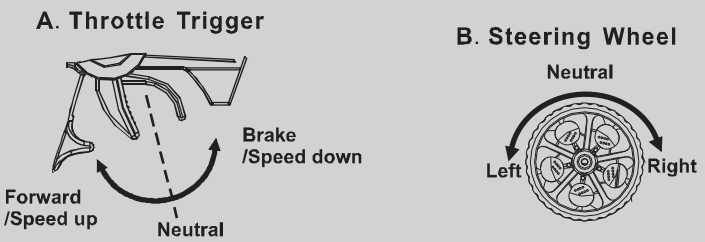

1. Push the trigger forward to slow down or brake.
2. Pull the trigger backward to accelerate.

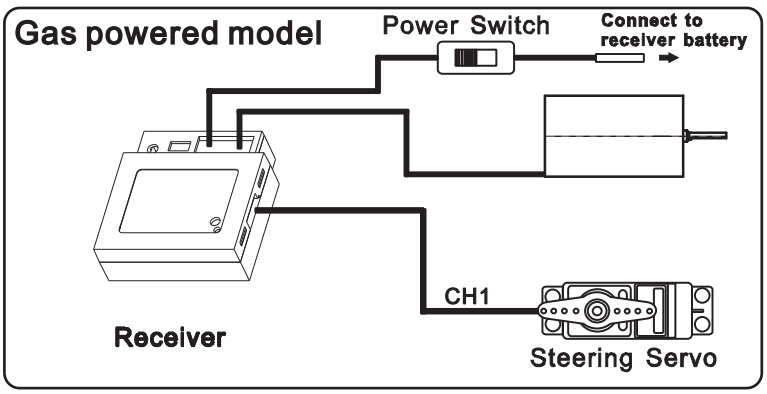

FCC and IC Caution：

This device complies with Part 15 of the FCC Rules.
Operation is subject to the following two conditions: (1) this device may not cause harmful interference, and (2) this device must accept any interference received, including interference that may cause undesired operation.

This device complies with Industry Canada’s licence-exempt RSSs. Operation is subject to the following two conditions:
(1) This device may not cause interference; and
(2) This device must accept any interference, including interference that may cause undesired operation of the device.

Any Changes or modifications not expressly approved by the party responsible for compliance could void the user's authority to operate the equipment.

The device has been evaluated to meet general RF exposure requirement. The device can be used in portable exposure condition without restriction.
Le présent appareil est conforme aux CNR d'Industrie Canada applicables aux appareils radio exempts de licence. L'exploitation est autorisée aux deux conditions suivantes : (1) l'appareil ne doit pas produire de brouillage, et (2) l'utilisateur de l'appareil doit accepter tout brouillage radioélectrique subi, même si le brouillage est susceptible d'en compromettre le fonctionnement.
ANT. Integrated Antenna , 3dBi