TEST REPORT

Report No.:SHATBL2605019W02

Applicant	:	TableTop Media, LLC d/b/a Ziosk
Product Name	:	Ziosk Mini 2
Brand Name	:	Ziosk
Model Name	:	Z700
Series Model	:	N/A
FCC ID	:	XOX-Z700
Test Standard	:	FCC CFR Title 47 Part 15 Subpart C Section 15.247
Date of Sample Arrival	:	May 14, 2026
Date of Test	:	May 14, 2026~Jun 09, 2026
Issue Date	:	Jun 09, 2026

Report Prepared by : Emily

(Emily)

Report Approved by : Guozheng Li

(Guozheng Li)

Authorized Signatory : Terry Yang

(Terry Yang)

"Shanghai ATBL Technology Co., Ltd." hereby certifies that according to actual testing conditions. The test results or observations are provided in accordance with measured value, without taking risks caused by uncertainty into account. Without explicit stipulation in special agreements, standards, or regulations, ATBL shall not assume any responsibility. The test results or observations are applicable only to tested sample. Client shall be responsible for representativeness of the sample and authenticity of the material. This report will be void without authorized signature or special seal for testing report. Do not copied without authorization.

Revision History

Rev.	Issue Date	Report No.	Effect Page	Contents
00	Jun 09, 2026	SHATBL2605019W02	ALL	Initial Release

CONTENTS

Description **Page**

1.GENERAL DESCRIPTION 6
1.1.Applicant 6
1.2.Manufacturer 6
1.3.Factory 6
1.4.Laboratory Information 7
1.5.Applicable Standards 7
2.RODUCT INFORMATION 8
2.1.General Information of EUT 8
2.2.Product Specification Subjective to this Report 8
2.3.Operation Frequency Channel 9
2.4.Pseudorandom Frequency Hopping Sequence 10
2.6.Test Mode 10
2.7.Block Diagram of Test System 11
2.8.Description of Support Units 11
2.9.Test Software and Power Level 12
2.10.EUT Operating Conditions 12
2.11.Equipment List 13
2.12.Measurement Uncertainty 15
2.13.Environmental conditions 15
2.14.Antenna Requirement 15
3.TEST RESULT 16
3.1.Maximum Peak Conducted Output Power 16
3.2.Number of Hopping Frequencies 17
3.3.Dwell Time 18
3.4.Duty Cycle 19
3.5.20dB Bandwidth 20
3.6.Carrier Frequency Separation 21
3.7.Conducted Band Edge 22
3.8.Conducted Spurious Emission 23
3.9.Radiated Spurious Emission and Restricted Band 24
3.10.AC Power-Line Conducted Emission 27
4.TEST SETUP PHOTOGRAPHS 28
5.EXTERNAL AND INTERNAL PHOTOS OF THE EUT 28

DECLARATION OF REPORT

1.The test results relate only to the samples tested.

2.This equipment has been shown to be capable of compliance with the applicable technical standards as indicated in the measurement report and was tested in accordance with the measurement procedures specified in Part 15 Subpart C Section 15.247. Test results reported herein relate only to the item(s) tested.

3.The test report shall not be reproduced except in full without the written approval of ATBL Technology Co., Ltd.

SUMMARY OF TEST RESULT

No.	Standard	Test Item	Result	Remark
1	47 CFR 15.247(b)(1)	Maximum Peak Conducted Output Power	PASS	--
2	47 CFR 15.247(a)(1)(iii)	Number of Hopping Frequencies	PASS	--
3	47 CFR 15.247(a)(1)(iii)	Dwell Time	PASS	--
4	47 CFR 15.247(a)(1)	20dB Bandwidth	Report only	--
5	47 CFR 15.247(a)(1)	Carrier Frequency Separation	PASS	--
6	47 CFR 15.247(d)	Conducted Band Edge	PASS	--
7	47 CFR 15.247(d)	Conducted Spurious Emission	PASS	--
8	47 CFR 15.247(d)/15.209(a)/15.205(a)	Radiated Spurious Emission and Restricted Band	PASS	--
9	47 CFR 15.207(a)	AC Power-Line Conducted Emission	PASS	--
10	47 CFR 15.203	Antenna Requirements	PASS	--
11	--	Duty Cycle	Report only	--

Notes:

1). The analyzer plots shown in this section were all taken with a correction table loaded into the analyzer. The correction table was used to account for the losses of the cables and attenuators used as part of the system to connect the EUT to the analyzer at all frequencies of interest.

2). “N/A” means that the test item is not applicable, and the details refer to relevant section.

1.GENERAL DESCRIPTION

1.1.Applicant

Name	:	TableTop Media, LLC d/b/a Ziosk
Address	:	6201 W Plano Parkway Suite. 450, Plano, TEXAS 75093

1.2.Manufacturer

Name	:	Z-TECH COMMUNICATION(SZ)CO.,LTD
Address	:	RM 2001 Floor 20. Block 1.Qianhai Kexing Science Park,49 Yintian Road, Xixiang Baoan ,Shenzhen, China, 518102

1.3.Factory

Name	:	HUAGUAN TECHNOLOGY（HEYUAN）CO.,LTD.
Address	:	HuaGuan Science and Technology Park, North of Gaoxin 7th Road, West of Xingye Avenue, Heyuan High-tech Development Zone.

1.4.Laboratory Information

Company Name	:	Shanghai ATBL Technology Co., Ltd.
Address	:	Building 8,No.160 Basheng Road, Waigaoqiao Free Trade Zone, Pudong New Area, Shanghai
Telephone	:	+86(0)21-51298625
FCC-Registration Number	:	485917
Designation Number	:	CN1306
A2LA Number	:	6184.01
CNAS Number	:	CNAS L14531
ISED Designation Number	:	27371
CAB identifier	:	CN0116

1.5.Applicable Standards

According to the specifications of the manufacturer, the EUT must comply with the requirements of the following standards:

47 CFR Part 15 Subpart C §15.247

FCC KDB 558074 D01 15.247 Meas Guidance v05r02

ANSI C63.10-2020+Cor 1-2023

Remark:

All test items were verified and recorded according to the standards and without any deviation during the test.

2.RODUCT INFORMATION

2.1.General Information of EUT

Equipment Name	Ziosk Mini 2
Model Name	Z700
Series model	N/A
Model Difference	N/A
Sample No.	260500407
Power supply	DC 3.7V by Battery
Adapter	N/A
Battery	Rated Voltage:3.7V Charge Limit Voltage:4.1V Capacity:20800mAh
Hardware Version	HW ID:00
Software Version	9.0.0.6
Connecting I/O Port(s)	Refer to the remark below

2.2.Product Specification Subjective to this Report

Frequency Range	2402MHz - 2480MHz	
Number of Channels	79	
Carrier Frequency of Each Channel	2402 + n*1 MHz; n = 0 ~ 78	
Maximum Output Power To Antenna	Bluetooth BR(1Mbps):	10.76 dBm
	Bluetooth EDR(2Mbps):	10.07 dBm
	Bluetooth EDR(3Mbps):	10.29 dBm
Type of Modulation	Bluetooth BR(1Mbps):	GFSK
	Bluetooth EDR(2Mbps):	π/4-DQPSK
	Bluetooth EDR(3Mbps):	8-DPSK
Antenna Type	PIFA Antenna	
Antenna Gain	1.35dBi	

Note: Above antenna information is provided by applicant.

The equipment under test (EUT) is the Portable Indoor/Outdoor Wireless System. The test data contained in this report pertains only to the emissions due to the EUT's Bluetooth transmitter.

- 15.247(g): In accordance with the Bluetooth Industry Standard, the system is designed to comply with all of the regulations in Section 15.247 when the transmitter is presented with a continuous data (or information) system.

- 15.247(h): In accordance with the Bluetooth Industry Standard, the system does not coordinate its channels selection/ hopping sequence with other frequency hopping systems for the express purpose of avoiding the simultaneous occupancy of individual hopping frequencies by multiple transmitters.
- 15.247(h): The EUT employs Adaptive Frequency Hopping (AFH) which identifies sources of interference namely devices operating in 802.11 WLAN and excludes them from the list of available channels. The process of re-mapping reduces the number of test channels from 79 channels to a minimum number of 20 channels.

2.3.Operation Frequency Channel

Frequency Band	Channel	Frequency MHz	Channel	Frequency MHz	Channel	Frequency MHz
2402 - 2480 MHz	00	2402	27	2429	54	2456
	01	2403	28	2430	55	2457
	02	2404	29	2431	56	2458
	03	2405	30	2432	57	2459
	04	2406	31	2433	58	2460
	05	2407	32	2434	59	2461
	06	2408	33	2435	60	2462
	07	2409	34	2436	61	2463
	08	2410	35	2437	62	2464
	09	2411	36	2438	63	2465
	10	2412	37	2439	64	2466
	11	2413	38	2440	65	2467
	12	2414	39	2441	66	2468
	13	2415	40	2442	67	2469
	14	2416	41	2443	68	2470
	15	2417	42	2444	69	2471
	16	2418	43	2445	70	2472
	17	2419	44	2446	71	2473
	18	2420	45	2447	72	2474
	19	2421	46	2448	73	2475
	20	2422	47	2449	74	2476
	21	2423	48	2450	75	2477
	22	2424	49	2451	76	2478
	23	2425	50	2452	77	2479
	24	2426	51	2453	78	2480
	25	2427	52	2454	--	--
	26	2428	53	2455	--	--

2.4.Pseudorandom Frequency Hopping Sequence

The pseudorandom sequence may be generated in a nine-stage shift register whose 5th and 9th stage outputs are added in a modulo-two addition stage. And the result is fed back to the input of the first stage. The sequence begins with the first ONE of 9 consecutive ONEs; i.e. the shift register is initialized with nine ones.

- Number of shift register stages: 9
- Length of pseudo-random sequence: 29 - 1 = 511 bits
- Longest sequence of zeros: 8 (non-inverted signal)

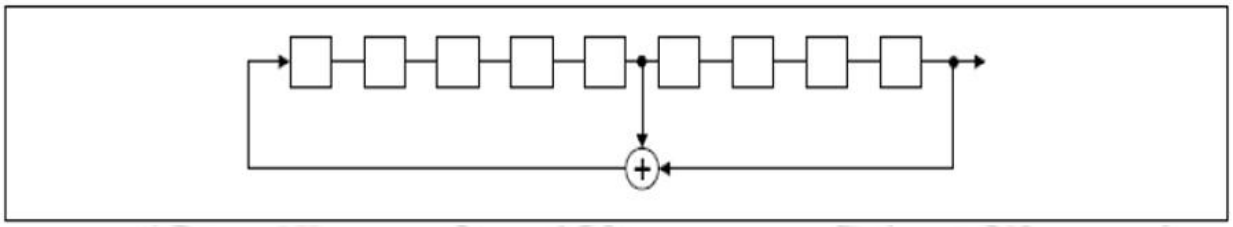

Linear Feedback Shift Register for Generation of the PRBS sequence

An example of Pseudorandom Frequency Hopping Sequence as follow:

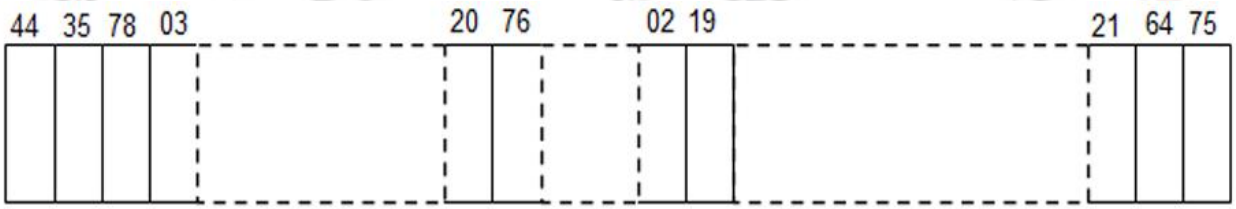

Each frequency used equally on the average by each transmitter.

The system receivers have input bandwidths that match the hopping channel bandwidths of their Corresponding transmitters and shift frequencies in synchronization with the transmitted signals.

2.6.Test Mode

Summary Table of Test Modes			
Test Item	Data Rate / Modulation		
	Bluetooth BR(1Mbps) GFSK	Bluetooth EDR(2Mbps) π/4-DQPSK	Bluetooth EDR(3Mbps) 8-DPSK
For Conducted and Radiated Test	Mode 1: CH00_2402MHz	Mode5:CH00_2402 MHz	Mode9:CH00_2402 MHz
	Mode 2: CH39_2441MHz	Mode6: CH39_2441MHz	Mode10:CH39_2441MHz
	Mode 3: CH78_2480MHz	Mode7: CH78_2480MHz	Mode11:CH78_2480MHz
	Mode 4: Hopping	Mode 8: Hopping	Mode 12: Hopping
For AC Power-line Conducted Emission	Mode 3: CH78_2480 MHz		

2.7.Block Diagram of Test System

For AC Power-Line Conducted Emission

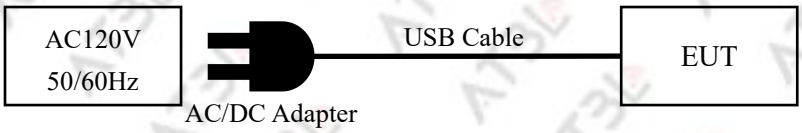

For Radiated Spurious Emission

For Conducted Test

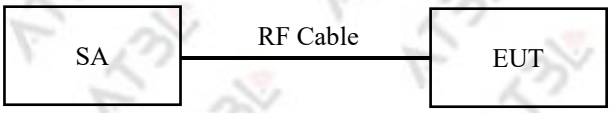

2.8.Description of Support Units

NO.	Unit	Brand	Model	S/N
1	RF Cable	N/A	N/A	N/A
2				

2.9.Test Software and Power Level

EUT Configure mode No.	Test conditions for modulation technology		
Mode A	GFSK		
Mode B	π/4-DQPSK		
Mode C	8DPSK		
RF Power Setting Value			
Channel	GFSK	π/4-DQPSK	8DPSK
	Power setting	Power setting	Power setting
0	Default-LV9	Default-LV9	Default-LV9
39	Default-LV9	Default-LV9	Default-LV9
78	Default-LV9	Default-LV9	Default-LV9

Note:

1.For the test results, the EUT had been tested with all conditions, and the worst-case mode of data will Recording in the report.

2.By means of test software which provided by manufacture, the power levels during the tests were set according to the above table were set according to the above table.

2.10.EUT Operating Conditions

For AC power-line conducted emission, the EUT was connected under the large package sizes transmission.

For radiated spurious emission and conducted test, the engineering test program was provided and make the EUT to continuous transmit/receive.

2.11.Equipment List

For AC Power-Line Conducted Emission

Kind of Equipment	Manu facturer	Type No.	Serial No.	equipment number	Calibrated until	Calibrated due until	Cal. Interval
EMI Test Receiver	R&S	ESPI	100679	SHATBL-E012	2025.08.20	2026.08.19	1 year
LISN	R&S	ENV216	101300	SHATBL-E013	2025.08.20	2026.08.19	1 year
LISN	R&S	ENV216	100333	SHATBL-E041	2025.08.20	2026.08.19	1 year
CE Cable	Chuangcexing	2M	EMI0014	SHATBL-E014	N/A	N/A	N/A
Temperature & Humidity	Deli	Deli	EMI0015	SHATBL-E015	2025.08.01	2026.07.31	1 year
Testing Software	FALA	EZ-EMC(Ver.EMC-CON 3A1.1)	EMI0044	SHATBL-E044	N/A	N/A	N/A

For Radiated Spurious Emission

Kind of Equipment	Manu facturer	Type No.	Serial No.	equipment number	Calibrated until	Calibrated due until	Cal. Interval
Signal analyzer	Agilent	N9020A	MY50200811	SHATBL-E017	2025.08.20	2026.08.19	1 year
Amplifier	JPT	JPA0118-55-303A	1910001800055000	SHATBL-E006	2025.08.20	2026.08.19	1 year
Amplifier	JPT	JPA-10M1G32	21010100035001	SHATBL-E005	2025.08.20	2026.08.19	1 year
Antenna/Turn table Controller	Brilliant	N/A	N/A	SHATBL-E007	N/A	N/A	N/A
Loop Antenna(9kHz-30 MHz)	Daze	ZN30900C	20077	SHATBL-E042	2025.08.20	2026.08.19	1 year
Bilog Antenna	SCHWARZBECK	VULB 9168	01174	SHATBL-E008	2025.08.20	2026.08.19	1 year
Broad-band Horn Antenna	SCHWARZBECK	BBHA 9120D	02334	SHATBL-E009	2025.08.20	2026.08.19	1 year
Horn Antenna	COM-POWER	AH-1840	10100008	SHATBL-E043	2025.07.27	2026.07.26	1 year
Thermometer	DeLi	N/A	N/A	SHATBL-E015	2025.08.01	2026.07.31	1 year
Test Software	FALA	EMC-RI(Ver.4A2)	N/A	N/A	N/A	N/A	N/A
Wideband radio communication tester	R&S	CMW500	101331	SHATBL-W044	2025.07.28	2026.07.27	1 year
Spectrum analyzer	R&S	FSV40-N	101761	SHATBL-W036	2025.07.28	2026.07.27	1 year
Filter box	XH microwave	RSE01	N/A	SHATBL-W030	N/A	N/A	N/A

For Conducted Test

Kind of Equipment	Manu facturer	Type No.	Serial No.	equipment number	Calibrated until	Calibrated due until	Cal. Interval
Power sensor	DARE	RPR3006W	16I00054SN016	SHATBL-W008	2025.07.28	2026.07.27	1 year
Adjustable Attenuator	Agilent	8494B	MY42144015	SHATBL-W009	2025.07.28	2026.07.27	1 year
Adjustable Attenuator	Agilent	8496B	MY42143776	SHATBL-W010	2025.07.28	2026.07.27	1 year
Environmental Test Chamber	KSON	THS-B6C-150	9159K	SHATBL-W019	2026.03.31	2027.03.30	1 year
Signal analyzer	Keysight	N9020A	MY50510136	SHATBL-W003	2025.07.18	2026.07.17	1 year
Vector signal generator	Agilent	N5182A	MY48180764	SHATBL-W043	2025.07.18	2026.07.17	1 year
Analog signal generator	Keysight	N5182B	MY57300196	SHATBL-W005	2025.07.18	2026.07.17	1 year
Wideband radio communication tester	R&S	CMW500	101331	SHATBL-W007	2025.07.28	2026.07.27	1 year
Switch Box	Cesheng	smu 1003	WCS20221215	SHATBL-W046	2026.03.21	2027.03.20	1 year
Thermometer	DeLi	N/A	N/A	SHATBL-W011	2025.08.01	2026.07.31	1 year
Test Software	Cesheng	WCS-WCN	N/A	SHATBL-W021	N/A	N/A	N/A

Remark:

Calibration duration for above equipments is 1 year.

2.12.Measurement Uncertainty

The reported uncertainty of measurement y±U, where expended uncertainty U is based on a standard uncertainty multiplied by a coverage factor of k=2, providing a level of confidence of approximately 95 %.

No.	Item	Uncertainty
1	RF output power, conducted	±0.958dB
2	Conducted spurious emissions	±2.988dB
3	All emissions, radiated 9KHz-30MHz	±0.96dB
4	All emissions, radiated 30MHz-1GHz	±2.50dB
5	All emissions, radiated 1GHz-18GHz	±3.51dB
6	All emissions, radiated 18GHz-40GHz	±3.56dB
7	Occupied bandwidth	±23.20Hz
8	Power spectral density	±0.886dB
9	AC Power Line Conducted Emission 0.15MHz ~ 30MHz	±1.20dB

2.13.Environmental conditions

During the measurement the environmental conditions were within the listed ranges:

Temperature	Normal Temperature:	22°C
Voltage	Normal Voltage:	3.7V
Other	Relative Humidity:	57%
	Air Pressure:	102kPa

2.14.Antenna Requirement

Excerpt from §15.203 of the FCC Rules/Regulations:

"An intentional radiator antenna shall be designed to ensure that no antenna other than that furnished by the responsible party can be used with the device. The use of a permanently attached antenna or of an antenna that uses a unique coupling to the intentional radiator shall be considered sufficient to comply with the provisions of this section."

- The antenna of the device is **permanently attached.**
- There are no provisions for connection to an **PIFA antenna.**

3.TEST RESULT

3.1.Maximum Peak Conducted Output Power

3.1.1.Limit

47 CFR 15.247(b)(1): For frequency hopping systems operating in the 2400-2483.5 MHz band employing at least 75 non-overlapping hopping channels, and all frequency hopping systems in the 5725-5850 MHz band: 1 watt. For all other frequency hopping systems in the 2400-2483.5 MHz band: 0.125 watts.

3.1.2.Test Procedure

A peak power sensor was used on the output port of the EUT.

A peak power meter was used to read the response of the peak power sensor. Record the peak power level.

3.1.3.Test Setup

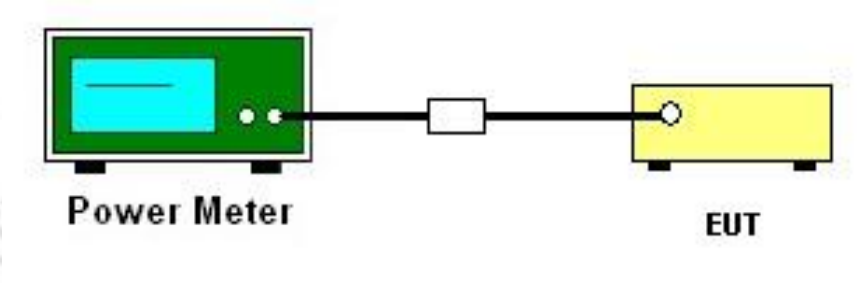

3.1.4.Test Result

Please refer to the Appendix A1

3.2.Number of Hopping Frequencies

3.2.1.Limit

47 CFR 15.247(a)(1)(iii): Frequency hopping systems in the 2400-2483.5 MHz band shall use at least 15 channels.

3.2.2.Test Procedure

ANSI C63.10-2020+Cor 1-2023 clause 7.8.3: The EUT shall have its hopping function enabled. Use the following spectrum analyzer settings:

1).Span: The frequency band of operation. Depending on the number of channels the device supports, it may be necessary to divide the frequency range of operation across multiple spans, to allow the individual channels to be clearly seen.

2).RBW: To identify clearly the individual channels, set the RBW to less than 30% of the channel spacing or the 20 dB bandwidth, whichever is smaller.

3).VBW ≥ RBW.

4).Sweep: Auto.

5).Detector function: Peak.

6).Trace: Max hold.

7).Allow the trace to stabilize.

8).It might prove necessary to break the span up into sub ranges to show clearly all of the hopping frequencies. Compliance of an EUT with the appropriate regulatory limit shall be determined for the number of hopping channels. A plot of the data shall be included in the test report.

3.2.3.Test Setup

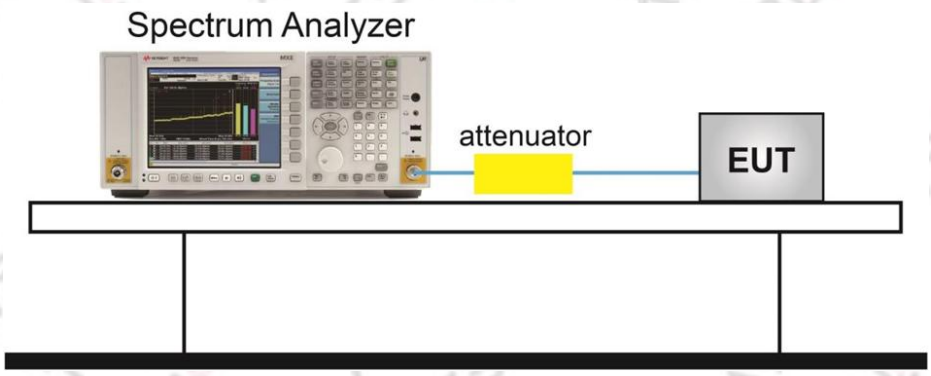

3.2.4.Test Result

Please refer to the Appendix A2

3.3.Dwell Time

3.3.1.Limit

47 CFR 15.247(a)(1)(iii): The average time of occupancy on any channel shall not be greater than 0.4 seconds within a period of 0.4 seconds multiplied by the number of hopping channels employed.

3.3.2.Test Procedure

ANSI C63.10-2020+Cor 1-2023 clause 7.8.4: The EUT shall have its hopping function enabled. Use the following spectrum analyzer settings:

1).Span: Zero span, centered on a hopping channel.

RBW shall be ≤ channel spacing and where possible RBW should be set >> 1 / T, where T is the expected dwell time per channel.

2).Sweep: As necessary to capture the entire dwell time per hopping channel; where possible use a video trigger and trigger delay so that the transmitted signal starts a little to the right of the start of the plot. The trigger level might need slight adjustment to prevent triggering when the system hops on an adjacent channel; a second plot might be needed with a longer sweep time to show two successive hops on a channel.

3).Detector function: Peak.

4).Trace: Max hold.

5).Use the marker-delta function to determine the transmit time per hop.

6).The average time of occupancy is calculated from the transmit time per hop multiplied by the number of hops in the period specified in the requirements.

3.3.3.Test Setup

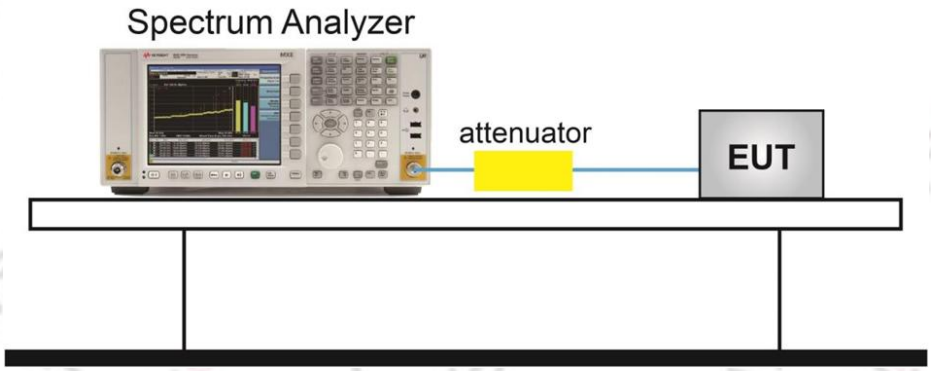

3.3.4.Test Result

Please refer to the Appendix A3

3.4.Duty Cycle

3.4.1.Limit

There is no limit requirement for Duty Cycle.

3.4.2.Test Procedure

ANSI C63.10-2020+Cor 1-2023 clause 11.6: Measurements of duty cycle and transmission duration shall be performed using one of the following techniques:

A diode detector and an oscilloscope that together have a sufficiently short response time to permit accurate measurements of the ON and OFF times of the transmitted signal.

The zero-span mode on a spectrum analyzer or EMI receiver if the response time and spacing between bins on the sweep are sufficient to permit accurate measurements of the ON and OFF times of the transmitted signal:

Set the center frequency of the instrument to the center frequency of the transmission.

Set RBW ≥ OBW if possible; otherwise, set RBW to the largest available value.

Set VBW ≥ RBW. Set detector = peak or average.

The zero-span measurement method shall not be used unless both RBW and VBW are > 50/T and the number of sweep points across duration T exceeds 100. (For example, if VBW and/or RBW are limited to 3 MHz, then the zero-span method of measuring the duty cycle shall not be used if T ≤ 16.7 μs.)

3.4.3.Test Setup

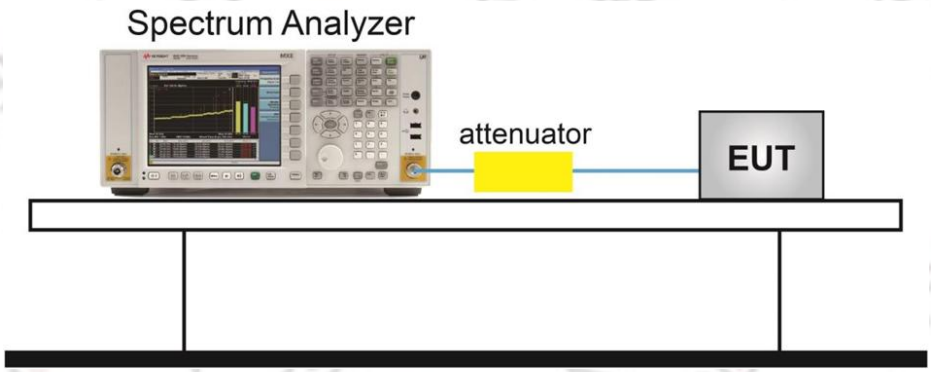

3.4.4.Test Result of Duty Cycle

Please refer to the Appendix A4.

3.5.20dB Bandwidth

3.5.1.Limit

There is no limit requirement for 20dB Bandwidth.

3.5.2.Test Procedure

1).The testing follows *ANSI C63.10-2020+Cor 1-2023 clause 6.9.2 and 6.9.3*.

The RF output of EUT was connected to the spectrum analyzer by RF cable and attenuator. The path loss was compensated to the results for each measurement.

2).Set to the maximum power setting and enable the EUT transmit continuously.

3).Use the following spectrum analyzer settings for 20dB Bandwidth measurement. Span = approximately 2 to 3 times the 20 dB bandwidth, centered on a hopping channel; RBW ≥ 1% of the 20 dB bandwidth; VBW ≥ RBW; Sweep = auto; Detector function = peak; Trace = max hold.

4).Measure and record the results in the test report.

3.5.3.Test Setup

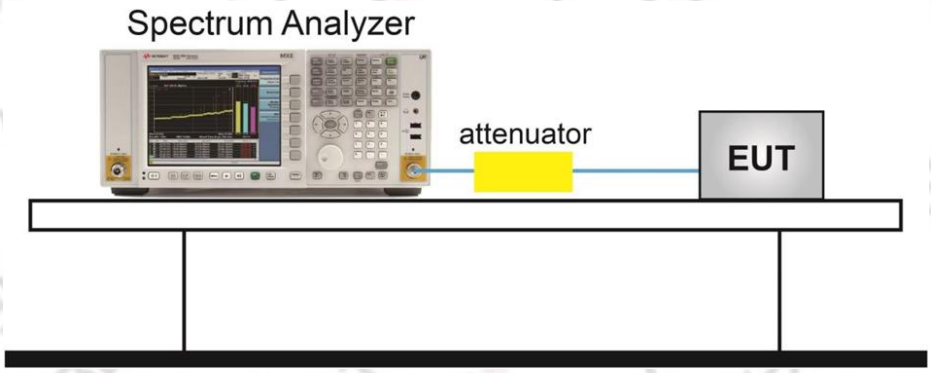

3.5.4.Test Result of 20dB Bandwidth

Please refer to the Appendix A5

3.6.Carrier Frequency Separation

3.6.1.Limit

47 CFR 15.247(a)(1): Frequency hopping systems operating in the 2400-2483.5 MHz band may have hopping channel carrier frequencies that are separated by 25 kHz or two-thirds of the 20 dB bandwidth of the hopping channel, whichever is greater.

3.6.2.Test Procedure

ANSI C63.10-2020+Cor 1-2023 clause 7.8.2: The EUT shall have its hopping function enabled. Use the following spectrum analyzer settings:

1).Span: Wide enough to capture the peaks of two adjacent channels.

2).RBW: Start with the RBW set to approximately 30% of the channel spacing; adjust as necessary to best identify the center of each individual channel.

3).VBW ≥ RBW.

4).Sweep: Auto.

5).Detector function: Peak.

6).Trace: Max hold.

7).Allow the trace to stabilize.

8).Use the marker-delta function to determine the separation between the peaks of the adjacent channels. A plot of the data shall be included in the test report.

3.6.3.Test Setup

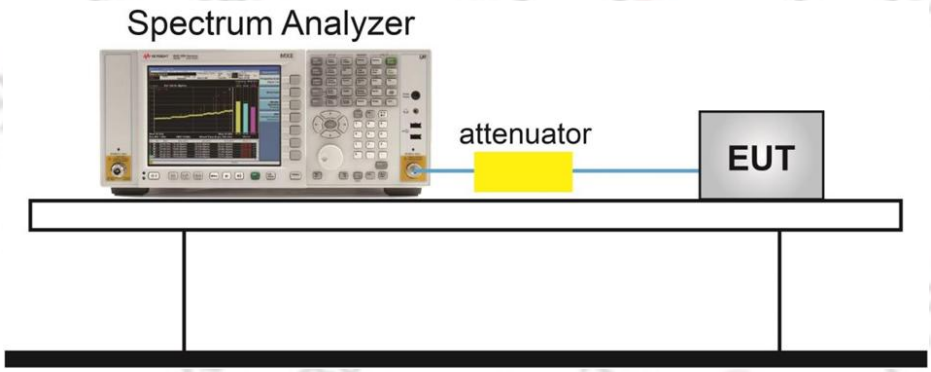

3.6.4.Test Result of Carrier Frequency Separation

Please refer to the Appendix A6

3.7.Conducted Band Edge

3.7.1.Limit

47 CFR 15.247(d): In any 100 kHz bandwidth outside the frequency band in which the spread spectrum or digitally modulated intentional radiator is operating, the radio frequency power that is produced by the intentional radiator shall be at least 20 dB below that in the 100 kHz bandwidth within the band that contains the highest level of the desired power, based on either an RF conducted or a radiated measurement, provided the transmitter demonstrates compliance with the peak conducted power limits.

3.7.2.Test Procedure

1).The testing follows *ANSI C63.10-2020+Cor 1-2023 clause 6.10*

2).Set to the maximum power setting and enable the EUT transmit continuously.

3).Set RBW = 100 kHz,

4).VBW=3 x RBW,

5).Peak Detector.

6).Conducted Band Edge measured in any 100 kHz bandwidth outside of the authorized frequency band shall be attenuated by at least 20 dB relative to the 100 kHz bandwidth within the band that contains the highest level of the desired power when maximum peak conducted output power procedure is used. If the transmitter complies with the conducted power limits based on the use of RMS averaging over a time interval, the attenuation required under this paragraph shall be 30 dB instead of 20 dB.

7).Measure and record the results in the test report.

8).The RF fundamental frequency should be excluded against the limit line in the operating frequency band.

3.7.3.Test Setup

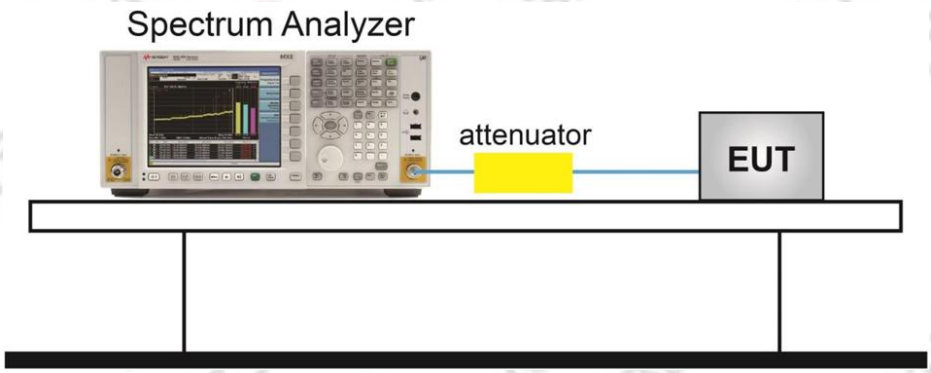

3.7.4.Test Result of Conducted Band Edge

Please refer to the Appendix A6

3.8.Conducted Spurious Emission

3.8.1.Limit

47 CFR 15.247(d): In any 100 kHz bandwidth outside the frequency band in which the spread spectrum or digitally modulated intentional radiator is operating, the radio frequency power that is produced by the intentional radiator shall be at least 20 dB below that in the 100 kHz bandwidth within the band that contains the highest level of the desired power, based on either an RF conducted or a radiated measurement, provided the transmitter demonstrates compliance with the peak conducted power limits.

3.8.2.Test Procedure

1).The testing follows *ANSI C63.10-2020+Cor 1-2023 clause 7.8.8*

2).The RF output of EUT was connected to the spectrum analyzer by RF cable and attenuator.

3).The path loss was compensated to the results for each measurement.

4).Set to the maximum power setting and enable the EUT transmit continuously.

5).Set RBW = 100kHz,

6).VBW = 300kHz, scan up through 10th harmonic. All harmonics / spurs must be at least 20 dB down from the highest emission level within the authorized band as measured with a 100 kHz RBW.

7).Measure and record the results in the test report.

8).The RF fundamental frequency should be excluded against the limit line in the operating frequency band.

3.8.3.Test Setup

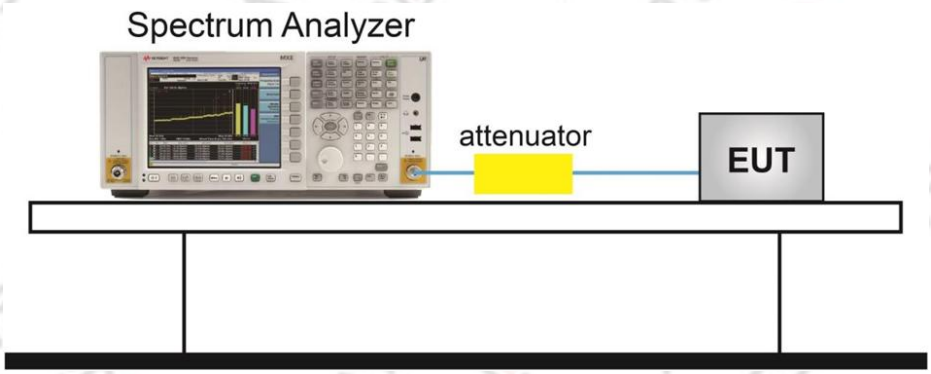

3.8.4.Test Result

Please refer to the Appendix A6

3.9.Radiated Spurious Emission and Restricted Band

3.9.1.Limit

47 CFR 15.247(d): In any 100 kHz bandwidth outside the frequency band in which the spread spectrum or digitally modulated intentional radiator is operating, the radio frequency power that is produced by the intentional radiator shall be at least 20 dB below that in the 100 kHz bandwidth within the band that contains the highest level of the desired power, based on either an RF conducted or a radiated measurement, provided the transmitter demonstrates compliance with the peak conducted power limits.

47 CFR 15.205(a): Only spurious emissions are permitted in any of the frequency bands listed below:

Frequency (MHz)	Frequency (MHz)	Frequency (MHz)	Frequency (MHz)	Frequency (GHz)
0.090-0.110	12.29-12.293	149.9-150.05	1660-1710	8.025-8.5
0.495-0.505	12.51975-12.52025	156.52475-156.52525	1718.8-1722.2	9.0-9.2
2.1735-2.1905	12.57675-12.57725	156.7-156.9	2200-2300	9.3-9.5
4.125-4.128	13.36-13.41	162.0125-167.17	2310-2390	10.6-12.7
4.17725-4.17775	16.42-16.423	167.72-173.2	2483.5-2500	13.25-13.4
4.20725-4.20775	16.69475-16.69525	240-285	2690-2900	14.47-14.5
6.215-6.218	16.80425-16.80475	322-335.4	3260-3267	15.35-16.2
6.26775-6.26825	25.5-25.67	399.9-410	3332-3339	17.7-21.4
6.31175-6.31225	37.5-38.25	608-614	3345.8-3358	22.01-23.12
8.291-8.294	73-74.6	960-1240	3600-4400	23.6-24.0
8.362-8.366	74.8-75.2	1300-1427	4500-5150	31.2-31.8
8.37625-8.38675	108-121.94	1435-1626.5	5350-5460	36.43-36.5
8.41425-8.41475	123-138	1645.5-1646.5	7250-7750	Above 38.6

47 CFR 15.209(a): The emissions from an intentional radiator shall not exceed the field strength levels specified in the following table:

Frequency (MHz)	Field strength (microvolts/meter)	Measurement distance (meters)
0.009-0.490	2400/F(kHz)	300
0.490-1.705	24000/F(kHz)	30
1.705-30.0	30	30
30-88	100	3
88-216	150	3
216-960	200	3
Above 960	500	3

3.9.2.Test Procedure

1).The EUT was placed on a turntable with 0.8 meter for frequency below 1GHz and 1.5 meter for frequency above 1GHz respectively above ground.

2).The EUT was set 3 meters from the interference receiving antenna, which was mounted on the top of a variable height antenna tower.

3).For each suspected emission, the EUT was arranged to its worst case and then tune the Antenna tower (from 1 m to 4 m) and turntable (from 0 degree to 360 degrees) to find the maximum reading. A Pre-amp and a high pass filter are used for the test in order to get better signal level to comply with the guidelines.

4).Set to the maximum power setting and enable the EUT transmit continuously.

5).Use the following spectrum analyzer settings:

Span shall wide enough to fully capture the emission being measured;

Set RBW=100 kHz for f < 1 GHz, RBW=1MHz for f>1GHz ; VBW ≥ RBW; Sweep = auto; Detector function = peak; Trace = max hold for peak;

For average measurement: use duty cycle correction factor method per 15.35(c).

Duty cycle = On time/100 milliseconds.

On time = N1*L1+N2*L2+...+Nn-1*LNn-1+Nn*Ln

Where N1 is number of type 1 pulses, L1 is length of type 1 pulses, etc.

Average Emission Level = Peak Emission Level + 20*log(Duty cycle)

6).Corrected Reading: Antenna Factor + Cable Loss + Read Level - Pre-amp Factor = Level.

7).For testing below 1GHz, if the emission level of the EUT in peak mode was 3 dB lower than the limit specified, then peak values of EUT will be reported, otherwise, the emissions will be repeated one by one using the CISPR quasi-peak method and reported.

8).For testing above 1GHz, the emission level of the EUT in peak mode was 20dB lower than peak limit (that means the emission level in average mode also complies with the limit in average mode), then peak values of EUT will be reported, otherwise, the emissions will be measured in average mode again and reported.

Remark:

The average levels were calculated from the peak level corrected with duty cycle correction factor (-24.70dB) derived from 20log (dwell time/100ms). This correction is only for signals that hop with the fundamental signal, such as band-edge and harmonic. Other spurious signals that are independent of the hopping signal would not use this correction.

3.9.3.Test Setup

For radiated emissions below 30MHz:

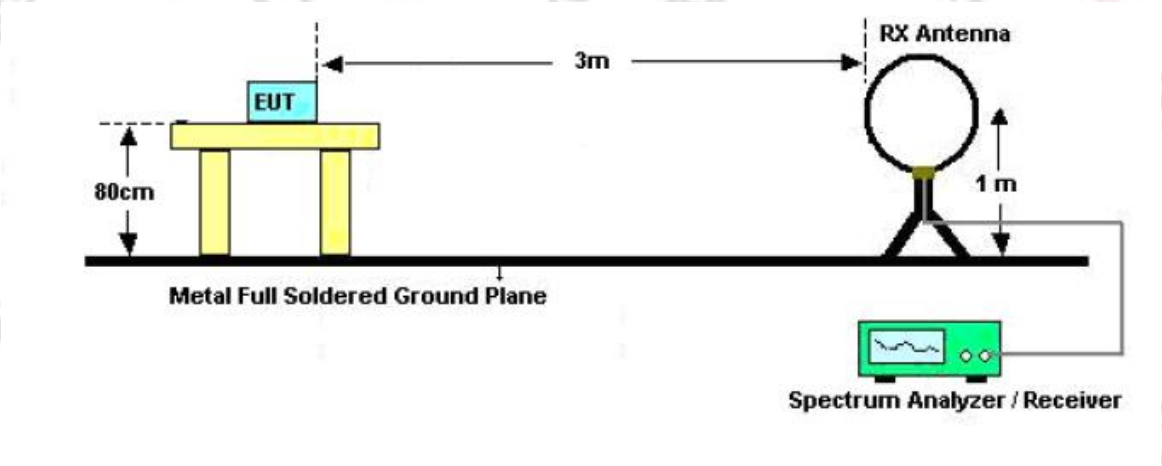

For radiated emissions from 30MHz to 1GHz:

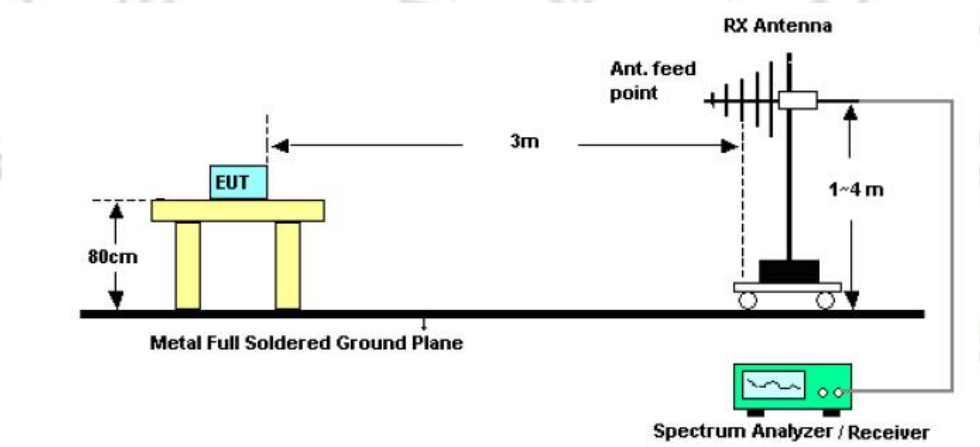

For radiated emissions above 1GHz:

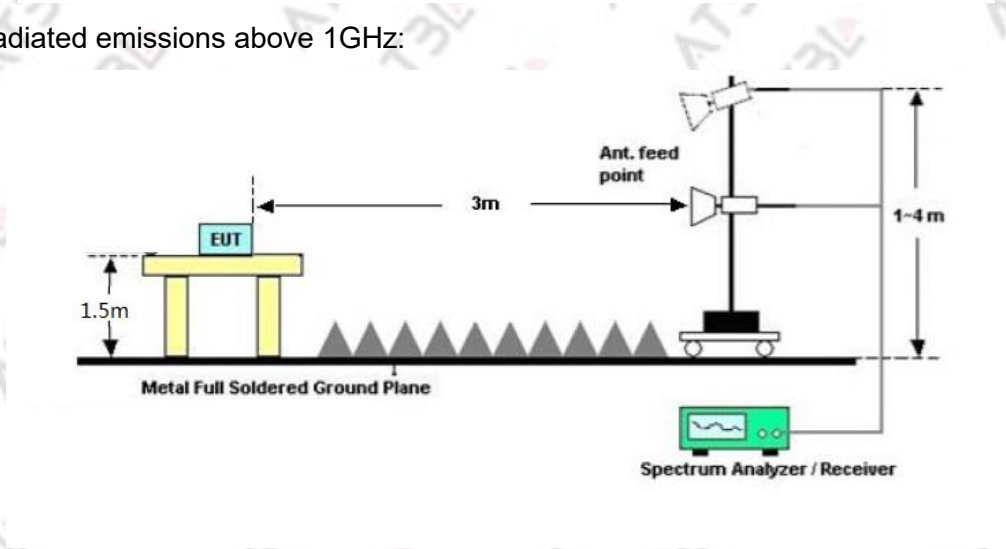

3.9.4.Test Result

Please refer to the Appendix B

3.10.AC Power-Line Conducted Emission

3.10.1.Limit

47 CFR 15.207(a): For an intentional radiator that is designed to be connected to the public utility (AC) power line, the radio frequency voltage that is conducted back onto the AC power line on any frequency or frequencies, within the band 150 kHz to 30 MHz, shall not exceed the limits in the following table:

Frequency of emission (MHz)	Conducted limit (dBμV)	
	Quasi-peak	Average
0.15-0.5	66 to 56*	56 to 46*
0.5-5	56	46
5-30	60	50

*Decreases with the logarithm of the frequency.

3.10.2.Test Procedure

1).The EUT was placed 0.4 meter from the conducting wall of the shielding room was kept at least 80 centimeters from any other grounded conducting surface.

2).Connect EUT to the power mains through a line impedance stabilization network (LISN).

3).All the support units are connecting to the other LISN.

4).The LISN provides 50 ohm coupling impedance for the measuring instrument.

5).The FCC states that a 50 ohm, 50 microhenry LISN should be used.

6).Both sides of AC line were checked for maximum conducted interference.

7).The frequency range from 150 kHz to 30 MHz was searched.

8).Set the test-receiver system to Peak Detect Function and specified bandwidth (IF Bandwidth = 9 kHz) with Maximum Hold Mode. Then measurement is also conducted by Average Detector and Quasi-Peak Detector Function respectively.

3.10.3.Test Setup

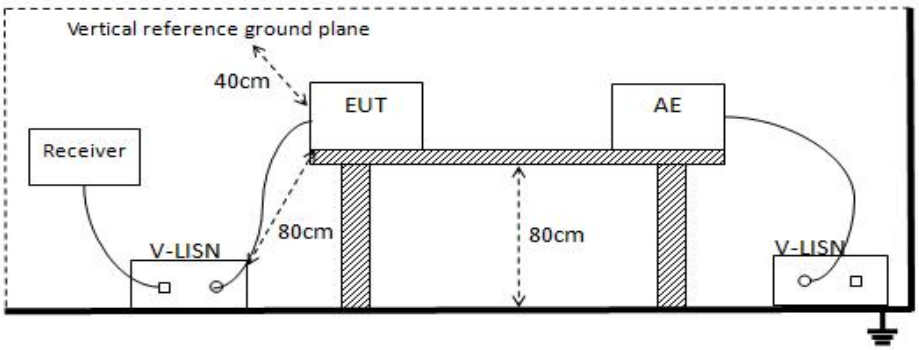

3.10.4.Test Result

Please refer to the Appendix B

4.TEST SETUP PHOTOGRAPHS

Please refer to Appendix C_Test Setup Template.

5.EXTERNAL AND INTERNAL PHOTOS OF THE EUT

Please refer to Appendix D_ External Photos of the EUT.

Please refer to Appendix D_ Internal Photos of the EUT.

※※※※※END※※※※※