S

JODY-W1 series

Host-based multiradio modules with Wi-Fi and Bluetooth

Data Sheet

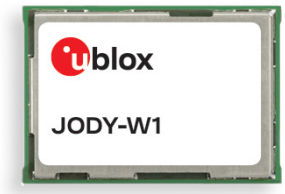

CONFIDENTIAL

Abstract

This technical data sheet describes the JODY-W1 series modules with 2x2 MIMO 802.11n/ac and dual-mode Bluetooth® v4.2. JODY-W1 is ideal for in-vehicle-infotainment and telematics applications with simultaneous use cases requiring high data rates, such as in-car hotspots, Wi-Fi display applications such as Apple CarPlay, or video streaming across multiple clients. Connection to a host processor is through PCIe, SDIO, or High-Speed UART interfaces.

www.u-blox.com

UBX-16013635 - R13

Document Information

Title	**JODY-W1 series**
Subtitle	Host-based multiradio modules with Wi-Fi and Bluetooth
Document type	Data Sheet
Document number	UBX-16013635
Revision and date	R13 19-Mar-2019
Disclosure Restriction	Confidential

Product status	Corresponding content status	
Functional Sample	Draft	For functional testing. Revised and supplementary data will be published later.
In Development / Prototype	Objective Specification	Target values. Revised and supplementary data will be published later.
Engineering Sample	Advance Information	Data based on early testing. Revised and supplementary data will be published later.
Initial Production	Early Production Information	Data from product verification. Revised and supplementary data may be published later.
Mass Production / End of Life	Production Information	Document contains the final product specification.

This document applies to the following products:

Product name	Type number	Chipset	PCN reference	Product status
JODY-W163-A	JODY-W163-04A-00	CYW89359	N/A	Initial Production
JODY-W163-A	JODY-W163-05A-00	CYW88359	N/A	Initial Production
JODY-W163-A	JODY-W163-13A-00	CYW89359	N/A	Engineering Sample
JODY-W164-A	JODY-W164-03A-01	CYW89359	N/A	Initial Production
JODY-W164-A	JODY-W164-04A-00	CYW89359	N/A	Initial Production
JODY-W164-A	JODY-W164-05A-00	CYW88359	N/A	Initial Production
JODY-W164-A	JODY-W164-07A-01	CYW88359	N/A	Initial Production
JODY-W167-A	JODY-W167-00A-00	CYW88359	N/A	Engineering Sample
JODY-W167-A	JODY-W167-03A-00	CYW89359	N/A	Engineering Sample
JODY-W167	JODY-W167-00B-00	CYW88359	N/A	Engineering Sample

CONFIDENTIAL

u-blox or third parties may hold intellectual property rights in the products, names, logos and designs included in this document. Copying, reproduction, modification or disclosure to third parties of this document or any part thereof is only permitted with the express written permission of u-blox.
The information contained herein is provided “as is” and u-blox assumes no liability for its use. No warranty, either express or implied, is given, including but not limited to, with respect to the accuracy, correctness, reliability and fitness for a particular purpose of the information. This document may be revised by u-blox at any time without notice. For the most recent documents, visit www.u-blox.com.
Copyright © u-blox AG.

Contents

Document Information **2**
Contents **3**
1 Functional description **5**
1.1 Overview 5
1.2 Applications 5
1.3 Product features 6
1.4 Product description 6
1.5 Block diagrams 7
1.6 Wi-Fi operation modes 8
1.6.1 RSDB single and multi-role operation modes 8
1.6.2 MIMO single and multi-role operation modes 9
1.7 Supported features 9
1.7.1 Wi-Fi Features 9
1.7.2 Bluetooth features 9
1.7.3 General product features 10
1.7.4 Compliance 10
2 Interfaces **11**
2.1 Host interface configuration 11
2.2 SDIO interface 11
2.2.1 Default speed and High speed modes 12
2.2.2 SDR12, SDR25, SDR50 Modes (up to 100 MHz) (1.8 V) 13
2.2.3 SDR104 Mode (208 MHz) (1.8 V) 13
2.2.4 DDR50 Mode (50 MHz) (1.8 V) 14
2.3 PCI Express interface 15
2.4 High Speed UART interface 16
2.5 PCM Interface 17
2.5.1 PCM Interface specifications 18
2.6 I²S Interface 21
2.6.1 I²S Interface specifications 22
2.7 LTE Coexistence interface 23
3 Pin definition **24**
3.1 Pin description 24
4 Electrical specification **27**
4.1 Absolute maximum ratings 27
4.2 Operating conditions 27
4.3 Digital pad ratings 27
4.4 Wi-Fi power consumption 28
4.5 Bluetooth power consumption 29
4.6 Radio specifications 29
4.6.1 Bluetooth 29

CONFIDENTIAL

4.6.2 Wi-Fi 29
4.7 LTE Coexistence performance 30
4.7.1 Wi-Fi receiver performance with LTE coexistence filter 30
4.7.2 Wi-Fi receiver performance with ordinary Wi-Fi Band pass filter 31
4.8 Module thermal information 32
5 Host drivers and firmware 34
5.1 General principle 34
5.2 Supported operating systems 34
5.2.1 Linux 34
6 Mechanical specifications 35
7 Approvals 36
7.1 Compliance with the RoHS directive 36
7.2 European Union regulatory compliance 36
7.3 FCC and IC compliance 36
7.3.1 FCC and ISED IDs 37
7.3.2 FCC compliance statement 37
7.3.3 ISED compliance statement 38
7.4 Certification in other countries 39
7.5 Approved antennas 39
7.5.1 Wi-Fi operation 39
7.5.2 Bluetooth operation 40
7.6 Bluetooth qualification 40
7.6.1 Bluetooth host stack 40
8 Product handling 41
8.1 Packaging 41
8.1.1 Reels 41
8.1.2 Tapes 41
8.2 Shipment, storage and handling 41
8.2.1 Moisture sensitivity levels 41
8.2.2 Mounting process and soldering recommendations 42
8.2.3 ESD handling precautions 42
9 Labeling and ordering information 43
9.1 Product labeling 43
9.2 Explanation of codes 44
9.3 Ordering codes 44
Appendix 46
A Glossary 46
Related documents 48
Revision history 48
Contact 50

CONFIDENTIAL

1 Functional description

1.1 Overview

The JODY-W1 series is a compact module based on the Cypress CYW88359 and CYW89359 AEC-Q100 compliant chipsets. It enables Wi-Fi, Bluetooth®, and Bluetooth low energy communication, and is thus ideal for in-vehicle-infotainment and telematics applications with simultaneous use cases requiring high data rates, such as in-car hotspots, Wi-Fi display applications such as Apple CarPlay, or video streaming across multiple clients. The JODY-W1 modules can be operated in the following modes:

- Wi-Fi 2x2 MIMO 802.11n/ac in 2.4 GHz or 5 GHz
- Wi-Fi 1x1 802.11ac in 2.4 / 5 GHz real simultaneous dual band
- Dual-mode Bluetooth v4.2, including audio, can operate simultaneously with both Wi-Fi modes

The JODY-W1 undergoes extended automotive qualification according to ISO 16750-4 and is manufactured in line with ISO/TS 16949. Connection to a host processor is through PCIe, SDIO, or High-Speed UART interfaces. The radio type approvals for JODY-W1 is pending for many countries, and more certifications are planned.

1.2 Applications

Automotive applications

- In-car Access Point for internet access
- Usage of applications such as Apple CarPlay, Miracast etc., in the car
- Rear-seat display
- Rapid sync-n-go applications and fast content download to the vehicle
- Hands-free equipment (Bluetooth)

Industrial applications

- Manufacturing floor automation, wireless control terminals and point-to-point backhaul
- Machine control
- Medical in-hospital applications
- Security and surveillance
- Outdoor content distribution
- Robust wireless connectivity in a broad range of industrial applications

CONFIDENTIAL

1.3 Product features

	JODY-W163	JODY-W164	JODY-W167
Grade			
Automotive	•	•	•
Professional			•
Standard			
Radio			
Bluetooth qualification		v4.2	
Bluetooth profiles		HCI	
Bluetooth BR/EDR	•	•	•
Bluetooth low energy	•	•	•
Wi-Fi IEEE 802.11 standards		a/b/g/n/ac	
Wi-Fi 2.4 / 5 [GHz]		2.4 and 5	
LTE filter	o	o	o
Bluetooth output power conducted [dBm]	10	10	10
Wi-Fi output power conducted [dBm]	18	18	18
Antenna type	2p	2p	3p
OS support			
Android / Linux drivers (from u-blox)	•	•	•
QNX (via third party)	•	•	•
Interfaces			
High-speed UART [B]	1	1	1
PCIe [W]		1	1
SDIO [version]	v3 [W]		
PCM (Bluetooth audio)	1	1	1
Features			
Micro Access Point [max connects]	10	10	10
AES hardware support	•	•	•
Wi-Fi direct	•	•	•
Factory-assigned MAC address	•	•	•
Factory calibrated RF	•	•	•
Simultaneous STA/AP on different channels	•	•	•

B = For Bluetooth only
W = For Wi-Fi only
o = On request

2p = 2 antenna pins, one each for Bluetooth and Wi-Fi
3p = 3 pins, 2 for Wi-Fi and 1 for Bluetooth antenna

Table 1: Key features of JODY-W1 series

1.4 Product description

Model	Description
JODY-W163-A	Automotive grade module with 2 antenna pins, RSDB mode with a single antenna pin. Support for SDIO host interface only.
JODY-W164-A	Automotive grade module with 2 antenna pins, RSDB mode with a single antenna pin. Support for PCIe host interface, except JODY-W164-07A-01.
JODY-W167-A	Automotive grade module with 3 antenna pins, 2x2 MIMO
JODY-W167	Professional grade module with 3 antenna pins, 2x2 MIMO

Table 2: Description of the module variants

CONFIDENTIAL

1.5 Block diagrams

The block diagrams of the JODY-W1 series are provided in this section.

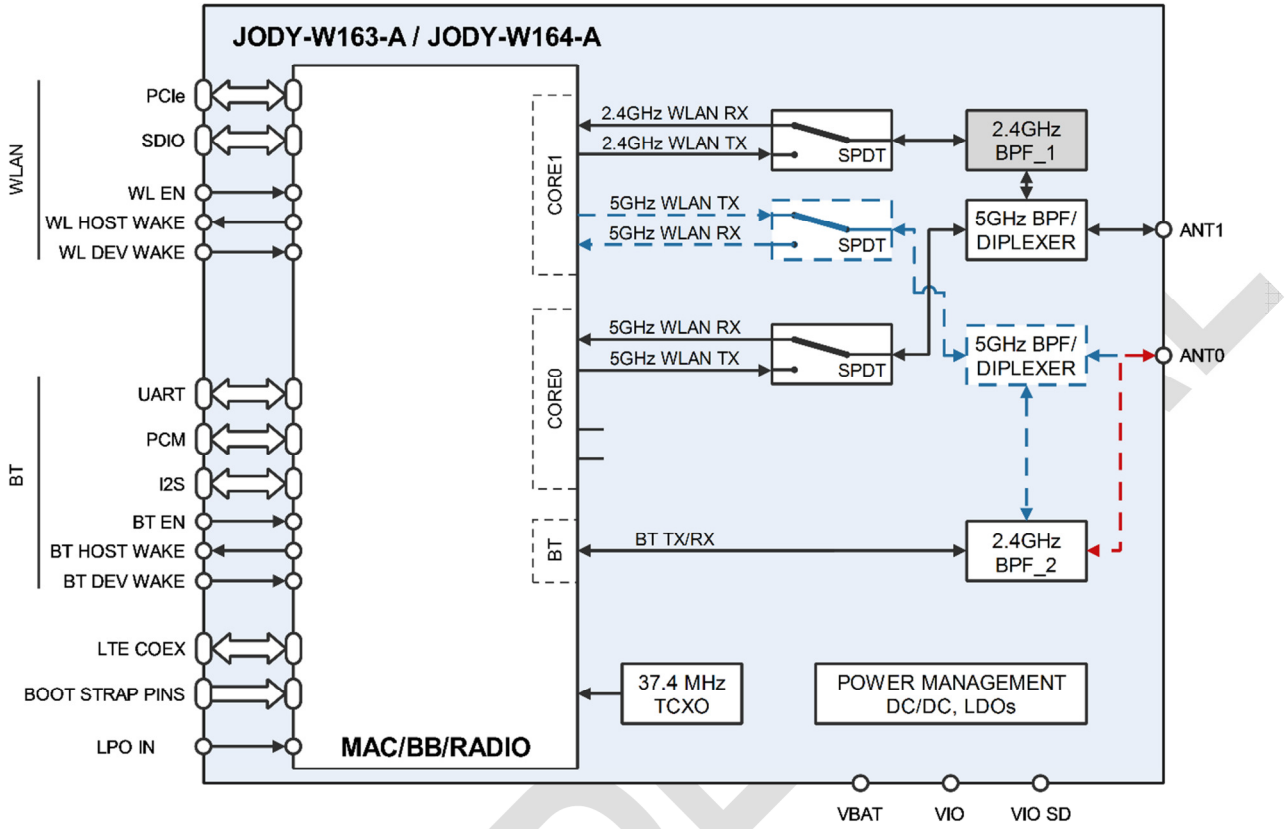

Figure 1: Block diagram of JODY-W163-A and JODY-W164-A

See Table 3 for available configurations and the corresponding product type numbers for JODY-W163-A and JODY-W164-A.

Product type	Antenna configuration		Band-pass filters	
	ANT0	ANT1	BPF_1	BPF_2
JODY-W164-03A-01	5 GHz Wi-Fi and Bluetooth	2.4 and 5 GHz Wi-Fi (RSDB operation supported)	Non-LTE coexistence	Non-LTE coexistence
JODY-W163-04A-00, JODY-W163-05A-00 JODY-W164-04A-00, JODY-W164-05A-00	Bluetooth	2.4 and 5 GHz Wi-Fi (RSDB operation supported)	Non-LTE coexistence	Non-LTE coexistence
JODY-W164-07A-01	Bluetooth	2.4 and 5 GHz Wi-Fi (RSDB operation supported)	LTE coexistence	Non-LTE coexistence
JODY-W163-13A-00	5 GHz Wi-Fi and Bluetooth	2.4 and 5 GHz Wi-Fi (RSDB operation supported)	LTE coexistence	Non-LTE coexistence

Table 3: Supported JODY-W164-A / JODY-W163-A configurations

☞ JODY-W163-A and JODY-W164-A differ only in the offered host interface (SDIO or PCIe). The host interface configuration is programmed at production time into the module.

☞ The LTE coexistence bandpass filter(BPF) is recommended when coexistence with the following LTE bands - 7, 38, 40 or 41 is implemented. The coexistence performance is provided in section 4.7.

CONFIDENTIAL

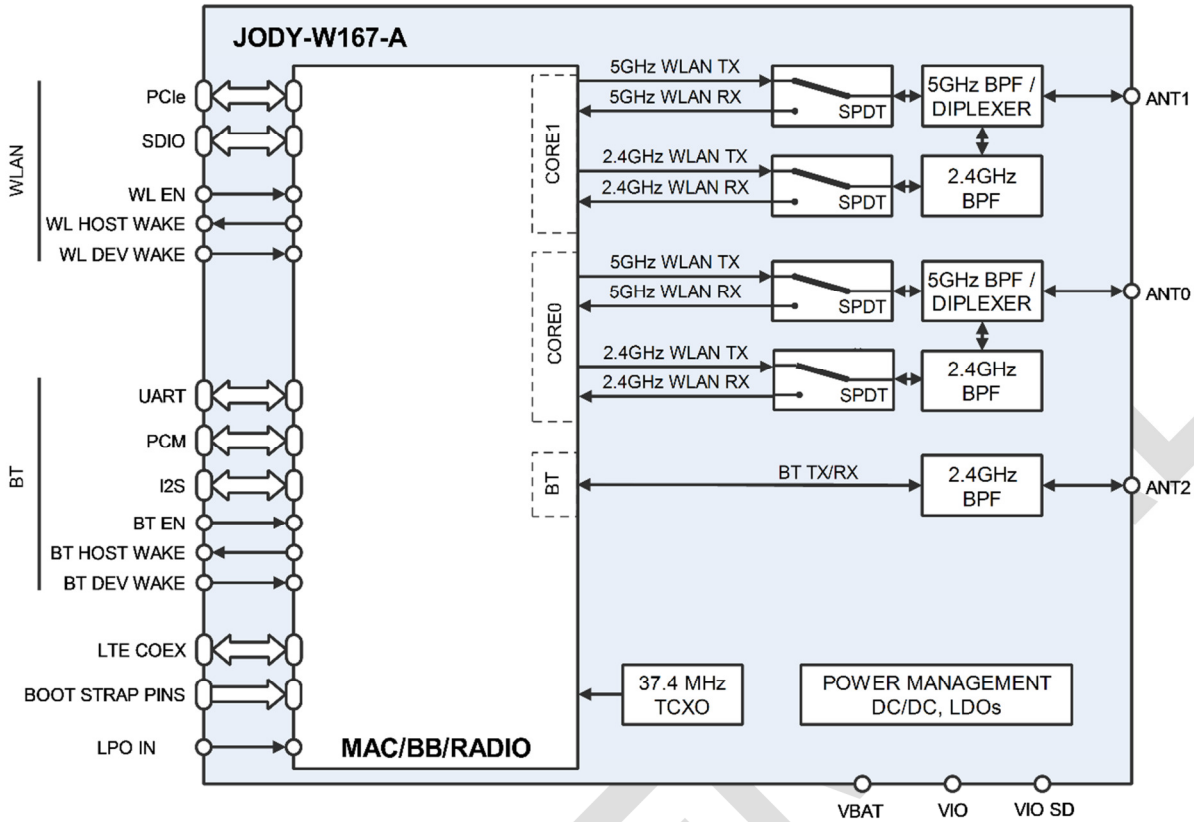

Figure 2: Block diagram of JODY-W167 (-A)

1.6 Wi-Fi operation modes

This section lists the Wi-Fi operation modes supported by the dual-MAC architecture of the JODY-W1 series modules. The modules support Wi-Fi operation on two fully concurrent 1x1 SISO channels in RSDB configuration, or on a single channel in 2x2 MIMO configuration. Dual-mode Bluetooth is supported concurrently to the Wi-Fi operation mode.

1.6.1 RSDB single and multi-role operation modes

2.4 GHz band	5 GHz band	Notes
AP	AP	Any channel
P2P (GO)	P2P (GO)	Any channel[1]
AP	STA	Any channel
STA	AP	Any channel
P2P (GO)	STA	Any channel[1]
STA	P2P (GO)	Any channel[1]
AP+STA	AP	Any channel. AP+STA on the same 2.4 GHz channel.
AP	AP+STA	Any channel. AP+STA on the same 5 GHz channel.
P2P (GO)	P2P (GO) + STA	Any channel. P2P (GO) + STA on the same 5 GHz channel[1]
P2P (GO) + STA	P2P (GO)	Any channel. P2P (GO) + STA on the same 2.4 GHz channel[1]

Table 4: Supported RSDB configurations

[1] Autonomous GO supported for P2P (GO)

1.6.2 MIMO single and multi-role operation modes

2.4 GHz band	5 GHz band	Notes
AP		Any channel
STA		Any channel
P2P (GO)		Any channel[1]
P2P (GC)		Any channel
AP+STA		Any channel. AP+STA on the same 2.4 GHz channel.
P2P (GO)+STA		Any channel. P2P (GO)+STA on the same 2.4 GHz channel.
P2P (GC)+STA		Any channel. P2P (GC)+STA on the same 2.4 GHz channel.
	AP	Any channel
	STA	Any channel
	P2P (GO)	Any channel[1]
	P2P (GC)	Any channel
	AP+STA	Any channel. AP+STA on the same 5 GHz channel.
	P2P (GO)+STA	Any channel. P2P (GO)+STA on the same 5 GHz channel.
	P2P (GC)+STA	Any channel. P2P (GC)+STA on the same 5 GHz channel.

Table 5: Supported MIMO configurations

☞ 5 GHz 2x2 MIMO is only supported on JODY-W167(-A), JODY-W163-13A, and JODY-W164-03A.

☞ 2.4 GHz 2x2 MIMO is only supported on JODY-W167(-A).

1.7 Supported features

1.7.1 Wi-Fi Features

- Wi-Fi standards:
  - IEEE 802.11a/b/g/n/ac/e/i/v/w/h[2] in station and access point modes
  - IEEE 802.11d/u in station mode only
- Simultaneous client and access point operation (up to 10 clients supported in total)
- Supports Wi-Fi direct/P2P mode
- IEEE 802.11ac 2x2 antenna configuration
- IEEE 802.11 PHY data rates up to 866 Mbps
- WPA/WPA2 and WAPI STA encryption is supported by hardware
- WPA/WPA2 Enterprise 802.1X
- Wi-Fi channels:
  - 2.4 GHz: 1-13
  - 5 GHz: 36-165
- RSDB mode
- SU-MIMO configurations
- SDIO 3.0 host interface for Wi-Fi[3]
- PCIe 3.0 at Gen1 speed host interface for Wi-Fi
- MWS/LTE coexistence serial transport interface to connect an external and co-located LTE device

1.7.2 Bluetooth features

- Bluetooth v4.2 with Bluetooth Low Energy and Classic Bluetooth v2.1+EDR over high-speed UART interface
- PCM / I^2S interface for voice applications

[2] The DFS master mode supported in non-RSDB firmware only. Approvals are pending.
[3] The SDIO interface is supported only in automotive grade.

CONFIDENTIAL

- MWS/LTE coexistence serial transport interface to connect an external and co-located LTE device

1.7.3 General product features

- Driver support for Linux 3.x/4.x
- Low-power and sleep modes for Bluetooth and Wi-Fi core
- Coexistence arbitration for Wi-Fi/Bluetooth/LE/LTE operation
- Small footprint (19.8 mm x 13.8 mm), LGA package
- Automotive qualification tests (climatic, mechanical, and operating life tests) according ISO 16750-4 planned

1.7.4 Compliance

- RoHS compliant
- Radio type approvals for Europe, USA, and Canada

☞ Additional country certifications on inquiry

CONFIDENTIAL

2 Interfaces

2.1 Host interface configuration

JODY-W1 series module uses the Pin 6, Pin 7, and Pin 8 pins as host interface configuration input to set the desired operation mode following a reset. When you need to configure the pins for a certain module operation mode, you need to provide a 10 kΩ or less pull down resistor to the ground. No external circuitry is required to set a configuration pin to high logical level.

External reset is not needed for proper operation due to internal power-up reset logic though it can be used by the host controller through the WL_EN / BT_EN (active high) in case of an abnormal module behavior.

Depending on the module variant, either SDIO or PCIe Wi-Fi host interface must be used:

PCIe enable Pin 6	SDIO disable Pin 7	SDIO VDD select Pin 8	VIO_SD supply Pin 4	Wi-Fi interface
1	1	1	3.3 V or 1.8 V	PCIe
0	0	1	1.8 V	SDIO 1.8 V
0	0	0	3.3 V	SDIO 3.3 V

Table 6: Module configuration

⚠ The JODY-W1 series modules support either SDIO or PCIe host interface depending on the module variant, and the host interface configuration must be selected accordingly. The following sections specify the electrical characteristics of the two host interfaces. See Table 7 for an overview of the supported host interface for different JODY-W1 product variants.

Product Name	Order Number	Host interface
JODY-W163-A	JODY-W163-04A	SDIO
JODY-W163-A	JODY-W163-05A	SDIO
JODY-W163-A	JODY-W163-13A	SDIO
JODY-W164-A	JODY-W164-03A	PCIe
JODY-W164-A	JODY-W164-04A	PCIe
JODY-W164-A	JODY-W164-05A	PCIe
JODY-W164-A	JODY-W164-07A	SDIO
JODY-W167-A	JODY-W167-00A	PCIe
JODY-W167-A	JODY-W167-03A	PCIe
JODY-W167	JODY-W167-00B	PCIe

Table 7: Supported host interfaces per product

2.2 SDIO interface

The SDIO device interface conforms to the industry standard SDIO 3.0 specification (UHS-I, up to 104 MByte/s) and allows a host controller using the SDIO bus protocol to access the Wi-Fi functions of the JODY-W1 series modules. The interface supports 4-bit SDIO transfer mode at the full clock range of 0 to 208 MHz.

CONFIDENTIAL

2.2.1 Default speed and High speed modes

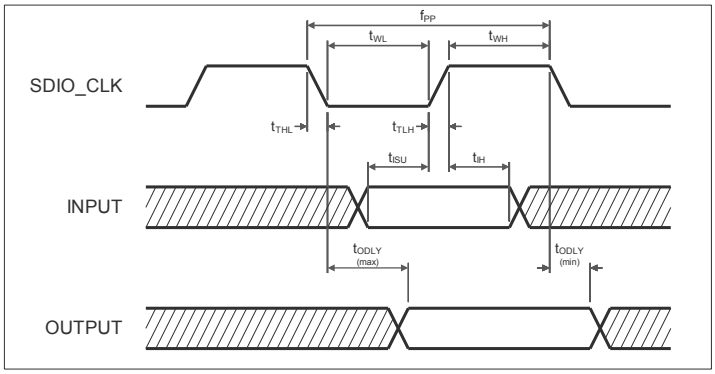

Figure 3: SDIO Protocol timing diagram- Default speed mode (3.3 V)

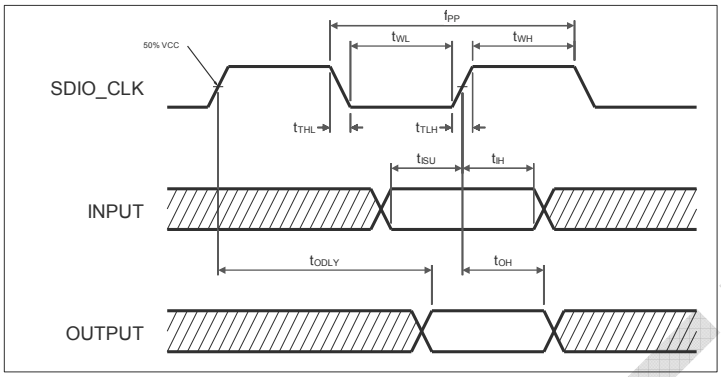

Figure 4: SDIO Protocol timing diagram – High speed mode (3.3 V)

Symbol	Parameter	Condition	Min.	Typ	Max.	Units
f_{PP}	Clock frequency – Data Transfer Mode	Normal	0	-	25	MHz
		High speed	0	-	50	MHz
f_{OD}	Clock frequency – Identification Mode	Normal	0		400	kHz
		High speed	0	-	400	kHz
t_{WL}	Clock low time	Normal	10	-	-	ns
		High speed	7	-	-	ns
t_{WH}	Clock high time	Normal	10	-	-	ns
		High speed	7	-	-	ns
t_{TLH}	Clock rise time	Normal	-	-	10	ns
		High speed	-	-	3	ns
t_{THL}	Clock low time	Normal	-	-	10	ns
		High speed	-	-	3	ns
t_{ISU}	Input setup time	Normal	5	-	-	ns
		High speed	6	-	-	ns
t_{IH}	Input hold time	Normal	5	-	-	ns
		High speed	2	-	-	ns
t_{ODLY}	Output delay time – Data Transfer Mode	Normal	0	-	14	ns
		High speed	-	-	14	ns
t_{ODLY}	Identification Mode	Normal	0	-	50	ns
t_{ODLY}	Output delay time CL ≤ 40 pF (1 card)	Normal	0	-	14	ns
t_{OH}	Output hold time	High speed	2.5	-	-	ns
CL	Total system capacitance (each line)	High speed	0	-	40	pF

Table 8: SDIO Timing data – Default speed, High speed modes (3.3 V)

CONFIDENTIAL

2.2.2 SDR12, SDR25, SDR50 Modes (up to 100 MHz) (1.8 V)

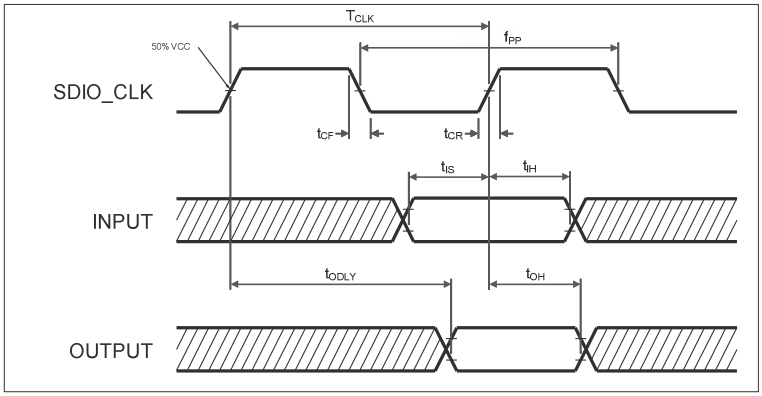

Figure 5: SDIO Protocol timing diagram – SDR12, SDR25, SDR50 modes (up to 100 MHz) (1.8 V)

Symbol	Parameter	Condition	Min.	Typ	Max.	Units
f_{PP}	Clock frequency	SDR12	0	-	25	MHz
		SDR25	0	-	50	MHz
		SDR50	0	-	100	MHz
t_{IS}	Input setup time	SDR12/25/50	3	-	-	ns
t_{IH}	Input hold time	SDR12/25/50	0.8	-	-	ns
t_{CLK}	Clock time	SDR12/25/50	10	-	40	ns
-	Clock duty	SDR12/25/50	30		70	%
t_{CR}, t_{CF},	Rise time, fall time T_{CR}, T_{CF} < 2 ns (max) at 100 MHz C_{CARD} = 10 pF	SDR12/25/50		-	0.2*T_{CLK}	ns
t_{ODLY}	Output delay time $C_L \leq 30$ pF	SDR12/25	-	-	14	ns
		SDR50	-		7.5	
t_{OH}	Output hold time C_L = 15 pF	SDR12/25/50	1.5	-	-	ns

Table 9: SDIO Timing data – SDR12, SDR25, SDR50 modes (up to 100 MHz) (1.8 V)

2.2.3 SDR104 Mode (208 MHz) (1.8 V)

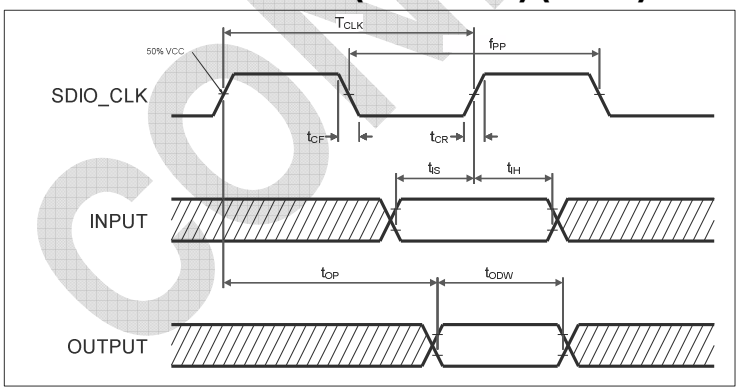

Figure 6: SDIO Protocol timing diagram – SDR104 mode (208 MHz)

Symbol	Parameter	Condition	Min.	Typ	Max.	Units
f_{PP}	Clock frequency	SDR104	0	-	208	MHz
T_{IS}	Input setup time	SDR104	1.4	-	-	ns
T_{IH}	Input hold time	SDR104	0.8	-	-	ns

CONFIDENTIAL

Symbol	Parameter	Condition	Min.	Typ	Max.	Units
T_{CLK}	Clock time	SDR104	4.8	-	-	ns
t_{CR}, t_{CF},	Rise time, fall time T_{CR}, T_{CF} < 0.96 ns (max) at 208 MHz C_{CARD} = 10 pF	SDR104		-	0.2*T_{CLK}	ns
T_{OP}	Card output phase	SDR104	0	-	2	UI
dT_{OP}	Delay variation due to temperature change after tuning	SDR104	-350		+1550	ps
T_{ODW}	Output timing of variable data window	SDR104	0.6	-	-	UI

Table 10: SDIO Timing data – SDR104 mode (208 MHz)

2.2.4 DDR50 Mode (50 MHz) (1.8 V)

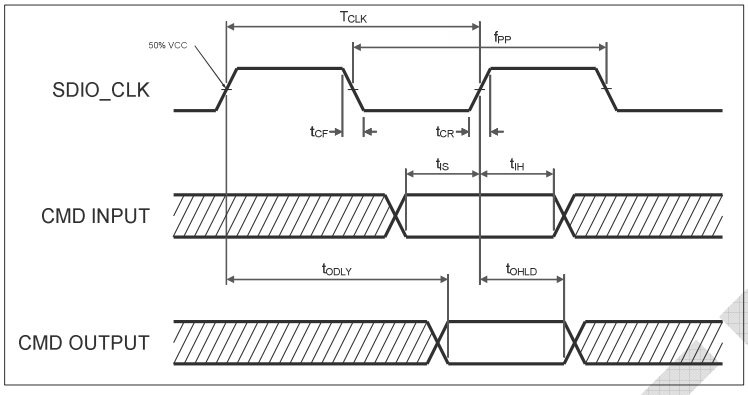

Figure 7: SDIO CMD Timing diagram – DDR50 mode (50 MHz)

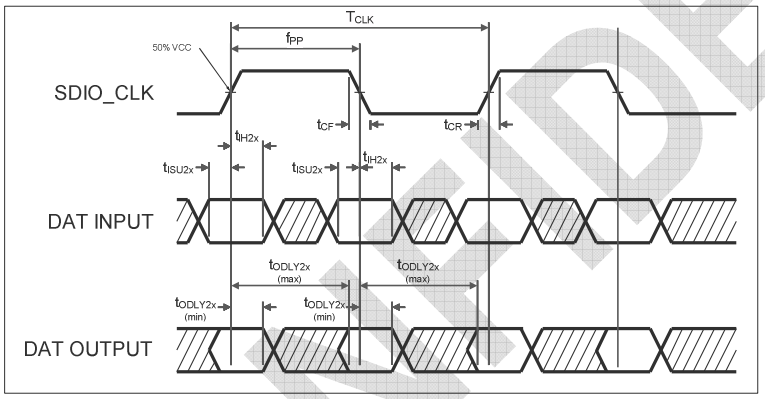

Figure 8: SDIO DAT[3:0] Timing diagram – DDR50 mode (50 MHz)

Symbol	Parameter	Condition	Min.	Typ	Max.	Units
Clock						
T_{CLK}	Clock time 50 MHz (max) between rising edges	DDR50	20	-	-	ns
t_{CR}, t_{CF},	Rise time, fall time T_{CR}, T_{CF} < 4.00 ns (max) at 50 MHz C_{CARD} = 10 pF	DDR50	-	-	0.2*T_{CLK}	ns
Clock Duty		DDR50	45	-	55	%
CMD Input (referenced to clock rising edge)						
t_{IS}	Input setup time $C_{CARD} \leq$ 10 pF (1 card)	DDR50	6	-	-	ns
t_{IH}	Input hold time $C_{CARD} \leq$ 10 pF (1 card)	DDR50	0.8	-	-	ns
CMD Output (referenced to clock rising edge)						

CONFIDENTIAL

Symbol	Parameter	Condition	Min.	Typ	Max.	Units
t_{ODLY}	Output delay time during data transfer mode $C_L \leq 30$ pF (1 card)	DDR50	-	-	13.7	ns
t_{OHLD}	Output hold time $C_L \geq 15$ pF (1 card)	DDR50	1.5	-	-	ns
DAT[3:0] Input (referenced to clock rising and falling edges)						
t_{IS2x}	Input setup time $C_{CARD} \leq 10$ pF (1 card)	DDR50	3			ns
t_{IH2x}	Input hold time $C_{CARD} \leq 10$ pF (1 card)	DDR50	0.8			ns
DAT[3:0] Output (referenced to clock rising and falling edges)						
$t_{ODLY2x\,(max)}$	Output delay time during data transfer mode $C_L \leq 25$ pF (1 card)	DDR50			7.5	ns
$t_{ODLY2x\,(min)}$	Output hold time $C_L \geq 15$ pF (1 card)	DDR50	1.5			ns

Table 11: SDIO Timing data – DDR50 mode (50 MHz)

2.3 PCI Express interface

The PCI Express interface complies with the PCIe v3.0 standard at Gen1 speed and allows a host controller using the PCIe bus protocol to access Wi-Fi functionality of the JODY-W1 series modules. The following table shows the parameters for the PCI Express interface.

Parameter	Symbol	Comments	Min.	Typ	Max.	Units
General						
Baud rate	BPS	-	-	5	-	Gbaud
Reference clock amplitude	Vref	LVPECL, AC coupled	1	-	-	V
Receiver						
Differential termination	ZRX-DIFF-DC	Differential termination	80	100	120	Ω
DC impedance	ZRX-DC	DC common-mode impedance	40	50	60	Ω
Power down termination (POS)	ZRX-HIGH-IMP-DC-POS	Power-down or RESET high impedance	100k	-	-	Ω
Power down termination (NEG)	ZRX-HIGH-IMP-DC-NEG	Power-down or RESET high impedance	1k	-	-	Ω
Input voltage	VRX-DIFFp-p	AC coupled, differential p-p	175	-	-	mV
Jitter tolerance	TRX-EYE	Minimum receiver eye width	0.4	-	-	UI
Differential return loss	RLRX-DIFF	Differential return loss	10	-	-	dB
Common-mode return loss	RLRX-CM	Common-mode return loss	6	-	-	dB
Unexpected electrical idle enter detect threshold integration time	TRX-IDEL-DET-DIFF-ENTERTIME	An unexpected electrical idle must be recognized no longer than this time to signal an unexpected idle condition	-	-	10	ms
Signal detect threshold	VRX-IDLE-DET-DIFFp-p	Electrical idle detect threshold	65	-	175	mV
Transmitter						
Output voltage	VTX-DIFFp-p	Differential p-p, programmable in 16 steps	0.8	-	1200	mV
Output voltage rise time	VTX-RISE	20% to 80%	0.125 (2.5 GT/s) 0.15 (5 GT/s)	- -	- -	UI
Output voltage fall time	VTX-FALL	80% to 20%	0.125	-	-	UI

CONFIDENTIAL

Parameter	Symbol	Comments	Min.	Typ	Max.	Units
			(2.5 GT/s) 0.15 (5 GT/s)	- -	- -	
RX detection voltage swing	VTX-RCV-DETECT	The amount of voltage change allowed during receiver detection	-	-	600	mV
TX AC peak common-mode voltage (5 GT/s)	VTX-CM-AC-PP	TX AC common mode voltage (2.5 GT/s)	-	-	100	mV
TX AC peak common-mode voltage (2.5 GT/s)	VTX-CM-AC-P	TX AC common mode voltage (5 GT/s)	-	-	20	mV
Absolute delta of DC common-mode voltage during L0 and electrical idle	VTX-CM-DC-ACTIVE-IDLE-DELTA	Absolute delta of DC common-mode voltage during L0 and electrical idle	0	-	100	mV
Absolute delta of DC common-mode voltage between D+ and D-	VTX-CM-DC-LINE-DELTA	DC offset between D+ and D-	0	-	25	mV
Electrical idle differential peak output voltage	VTX-IDLE-DIFF-AC-p	Peak-to-peak voltage	0	-	20	mV
TX short circuit current	ITX-SHORT	Current limit when TX output is shorted to ground	-	-	90	mA
DC differential TX termination	ZTX-DIFF-DC	Low impedance defined during signaling (parameter is captured for 5.0 GHz by RLTX-DIFF)	80	-	120	Ω
Differential return loss	RLTX-DIFF	Differential return loss	10 (min) for 0.05: 1.25 GHz	-	-	dB
Common-mode return loss	RLTX-CM	Common-mode return loss	6	-	-	dB
TX eye width	TTX-EYE	Minimum TX eye width	0.75	-	-	UI

Table 12: PCI Express interface parameters

2.4 High Speed UART interface

The JODY-W1 series modules support a high speed Universal Asynchronous Receiver/Transmitter (UART) interface in compliance with the industry standard 16550 specification. The main features of the UART interface are:

- 1040-bytes receive and transmit FIFO
- Automatic baud rate detection
- Supports Bluetooth 4.2 HCI specification
- 2 pins for transmit and receive operations
- 2 flow control pins
- Interrupt triggers for low-power, high throughput operation
- High throughput (4 Mbps)

CONFIDENTIAL

Baud Rate				
9600	115200 (default)	1000000	2100000	4000000
19200	230400	1382400	2764800	
38400	460800	1500000	3000000	
57600	500000	1843200	3250000	
76800	921600	2000000	3692300	

Table 13: Supported UART Baud rates

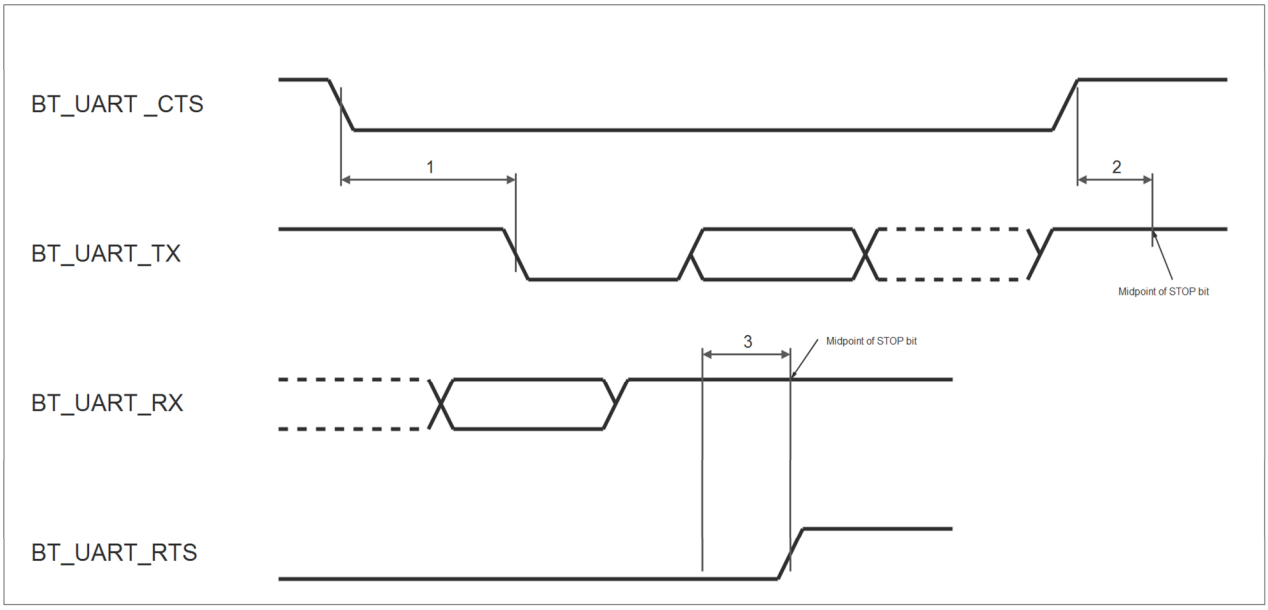

Figure 9: UART Timing

Reference	Characteristic	Min.	Typ	Max.	Units
1	Delay time, BT_UART_CTS low to BT_UART_TX valid	-	-	1.5	Bit period
2	Setup time, BT_UART_CTS high before midpoint of stop bit	-	-	0.5	Bit period
3	Delay time, midpoint of stop bit to BT_UART_RTS high	-	-	0.5	Bit period

Table 14: UART Timing Specification

2.5 PCM Interface

The JODY-W1 series modules support a Pulse Code Modulation (PCM) interface that provides the following:

- Master or slave mode
- PCM bit width size of 8 bits or 16 bits
- Up to 16 slots with configurable bit width and start positions
- Short frame and long frame synchronization
- Burst PCM mode

The PCM pins of JODY-W1 series modules can be configured to either PCM or I²S interface through HCI commands. The pin mapping information is described in section 2.6.

CONFIDENTIAL

2.5.1 PCM Interface specifications

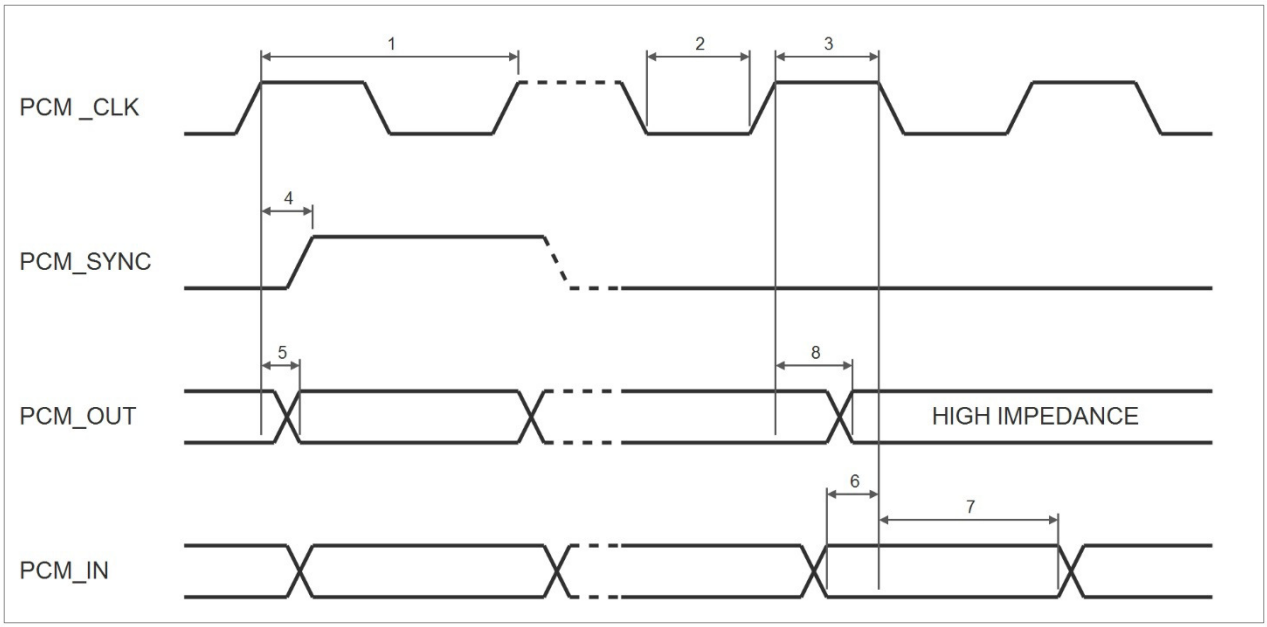

Figure 10: PCM Timing specification – Short Frame Sync., Master mode

Symbol	Parameter	Condition	Min.	Typ	Max.	Units
1	PCM clock frequency	-	-	-	12	MHz
2	PCM bit clock LOW	-	41	-	-	ns
3	PCM bit clock HIGH	-	41	-	-	ns
4	PCM_SYNC delay	-	0	-	25	ns
5	PCM_OUT delay	-	0	-	25	ns
6	PCM_IN setup	-	8	-	-	ns
7	PCM_IN hold	-	8	-	-	ns
8	Delay from rising edge of PCM_CLK during last bit period to PCM_OUT becoming high impedance	-	0	-	25	ns

Table 15: PCM Timing specification – Short Frame Sync., Master mode

CONFIDENTIAL

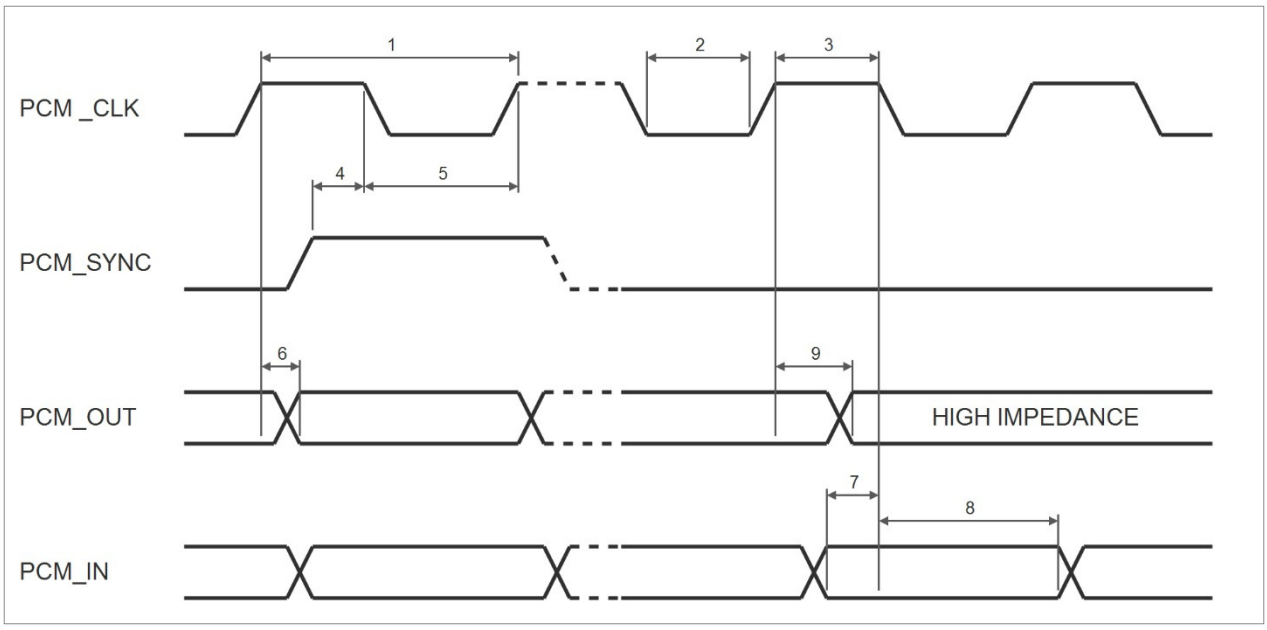

Figure 11: PCM Timing specification – Short Frame Sync., Slave mode

Symbol	Parameter	Condition	Min.	Typ	Max.	Units
1	PCM clock frequency	-	-	-	12	MHz
2	PCM bit clock LOW	-	41	-	-	ns
3	PCM bit clock HIGH	-	41	-	-	ns
4	PCM_SYNC setup	-	8	-	-	ns
5	PCM_SYNC hold		8	-	-	ns
6	PCM_OUT delay	-	0	-	25	ns
7	PCM_IN setup	-	8	-	-	ns
8	PCM_IN hold	-	8	-	-	ns
9	Delay from rising edge of PCM_CLK during last bit period to PCM_OUT becoming high impedance	-	0	-	25	ns

Table 16: PCM Timing specification – Short Frame Sync., Slave mode

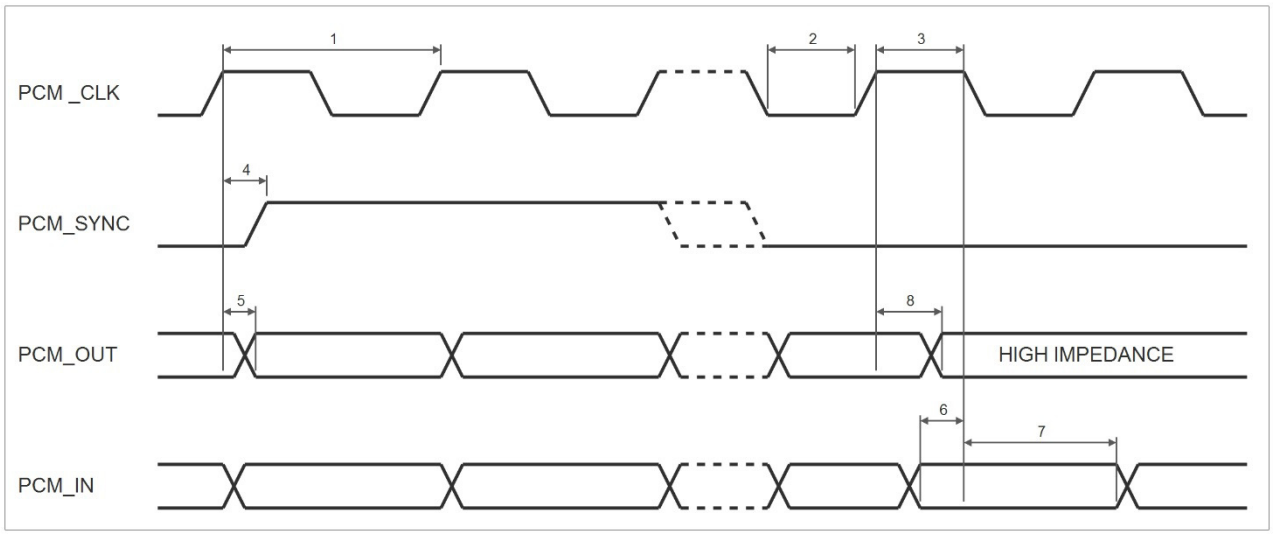

Figure 12: PCM Timing specification – Long Frame Sync., Master mode

Symbol	Parameter	Condition	Min.	Typ	Max.	Units
1	PCM clock frequency	-	-	-	12	MHz
2	PCM bit clock LOW	-	41	-	-	ns
3	PCM bit clock HIGH	-	41	-	-	ns
4	PCM_SYNC delay	-	0	-	25	ns
5	PCM_OUT delay	-	0	-	25	ns
6	PCM_IN setup	-	8	-	-	ns
7	PCM_IN hold	-	8	-	-	ns
8	Delay from rising edge of PCM_CLK during last bit period to PCM_OUT becoming high impedance	-	0	-	25	ns

Table 17: PCM Timing specification – Long Frame Sync., Master mode

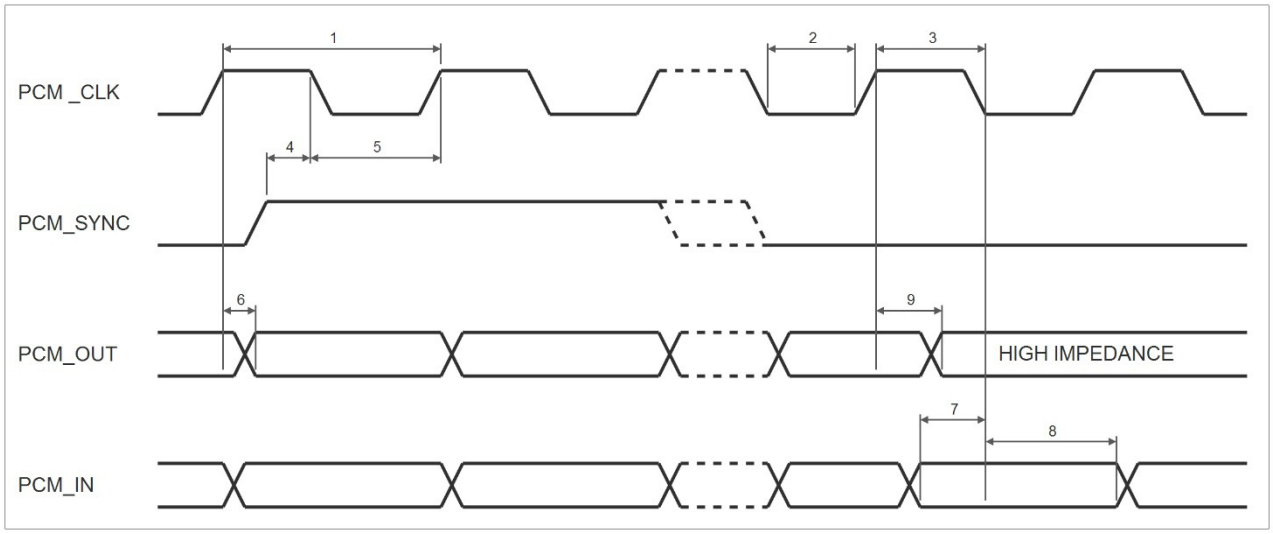

Figure 13: PCM Timing specification – Long Frame Sync., Slave mode

Symbol	Parameter	Condition	Min.	Typ	Max.	Units
1	PCM clock frequency	-	-	-	12	MHz
2	PCM bit clock LOW	-	41	-	-	ns
3	PCM bit clock HIGH	-	41	-	-	ns
4	PCM_SYNC setup	-	8	-	-	ns
5	PCM_SYNC hold		8	-	-	ns
6	PCM_OUT delay	-	0	-	25	ns
7	PCM_IN setup	-	8	-	-	ns
8	PCM_IN hold	-	8	-	-	ns
9	Delay from rising edge of PCM_CLK during last bit period to PCM_OUT becoming high impedance	-	0	-	25	ns

Table 18: PCM Timing specification – Long Frame Sync., Slave mode

CONFIDENTIAL

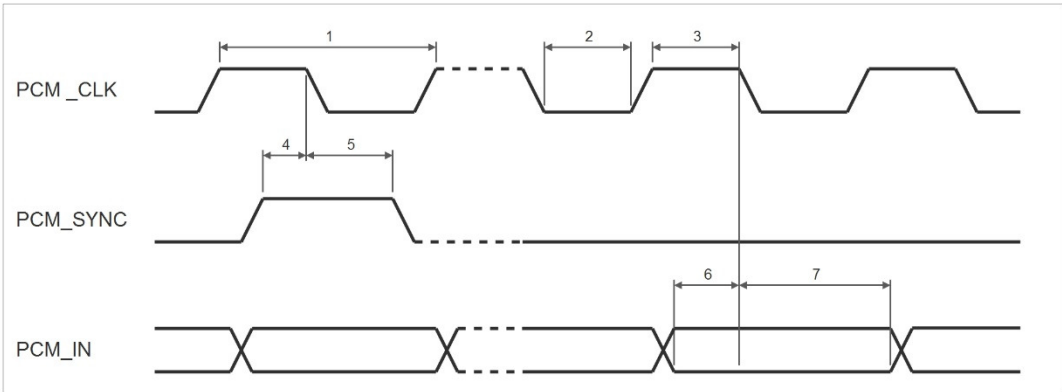

Figure 14: PCM Burst mode timing specification – Short Frame Sync., Receiver only

Symbol	Parameter	Condition	Min.	Typ	Max.	Units
1	PCM clock frequency	-	-	-	24	MHz
2	PCM bit clock LOW	-	20.8	-	-	ns
3	PCM bit clock HIGH	-	20.8	-	-	ns
4	PCM_SYNC setup	-	8	-	-	ns
5	PCM_SYNC hold		8	-	-	ns
6	PCM_IN setup	-	8	-	-	ns
7	PCM_IN hold	-	8	-	-	ns

Table 19: PCM Burst mode timing specification – Short Frame Sync., Receiver only

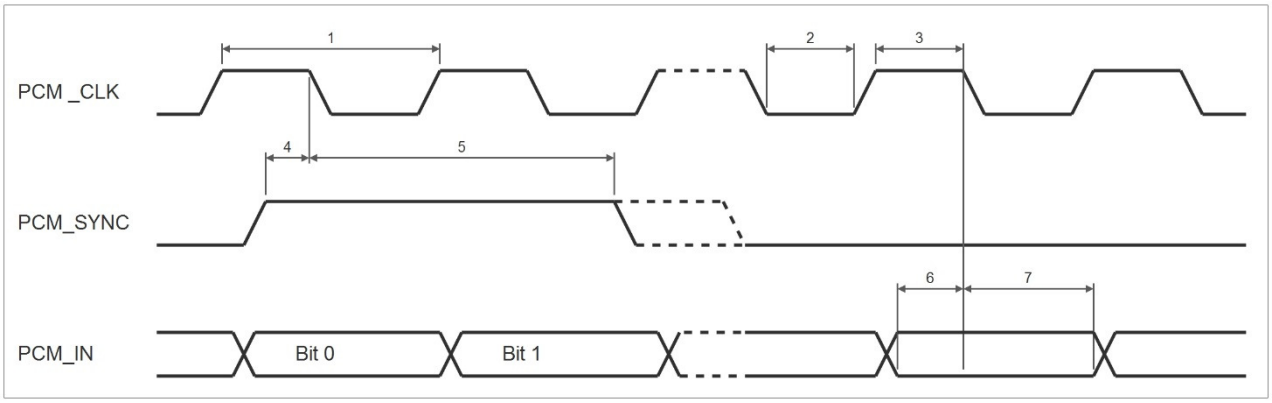

Figure 15: PCM Burst mode timing specification – Long Frame Sync., Receiver only

Symbol	Parameter	Condition	Min.	Typ	Max.	Units
1	PCM clock frequency	-	-	-	24	MHz
2	PCM bit clock LOW	-	20.8	-	-	ns
3	PCM bit clock HIGH	-	20.8	-	-	ns
4	PCM_SYNC setup	-	8	-	-	ns
5	PCM_SYNC hold		8	-	-	ns
6	PCM_IN setup	-	8	-	-	ns
7	PCM_IN hold	-	8	-	-	ns

Table 20: PCM Burst mode timing specification – Long Frame Sync., Receiver only

2.6 I²S Interface

The JODY-W1 series modules support I²S interface that provides clock rate in master mode 1.536 MHz (32 bits per frame) or 2.400 MHz (50 bits per frame).

This interface is addressable over the PCM pins, which can be routed to the I²S interface through HCI commands. The following I²S signals are mapped with the PCM pins:

PCM_CLK → I²S clock, can be master (output) or slave (input)
PCM_SYNC → I²S WS, can be master (output) or slave (input)
PCM_OUT → I²S data output
PCM_IN → I²S data input

2.6.1 I²S Interface specifications

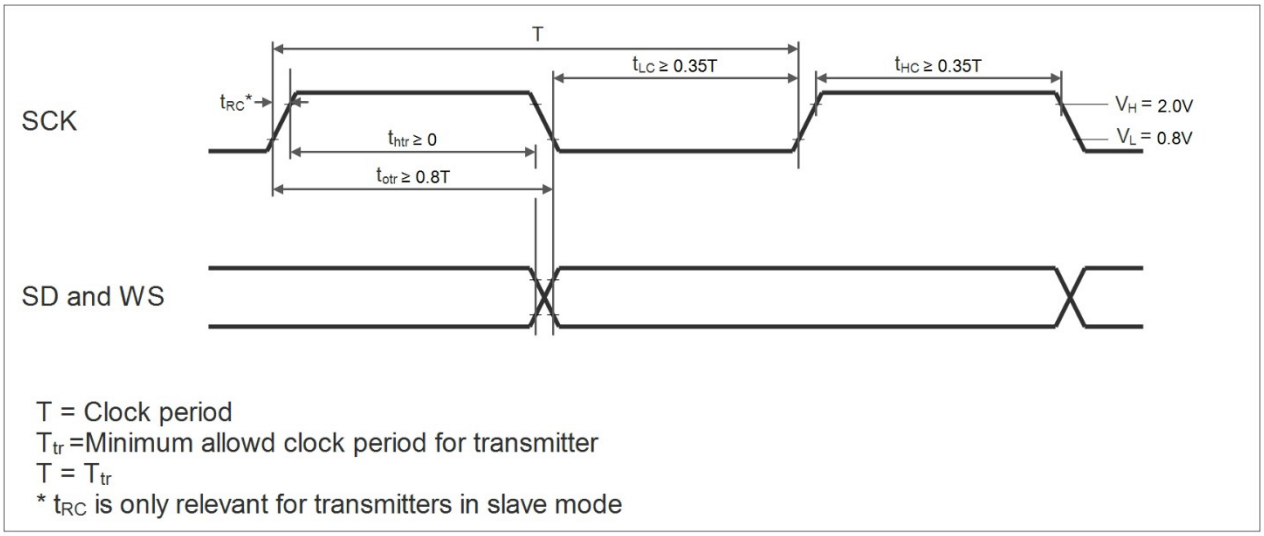

Figure 16: I²S Transmitter timing

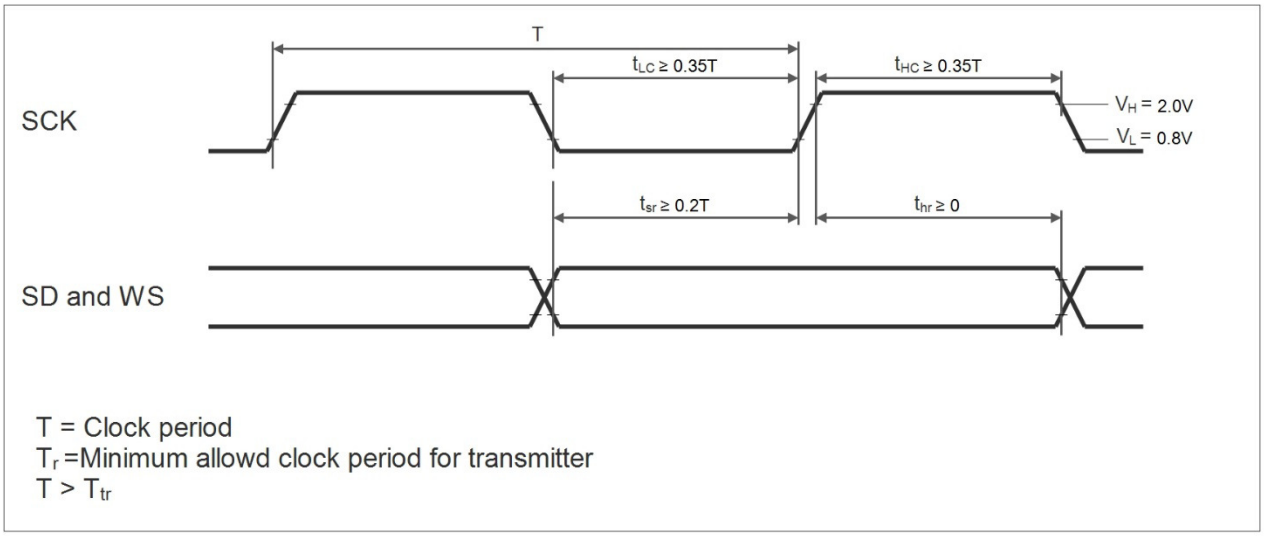

Figure 17: I²S Receiver timing

Parameter	Transmitter				Receiver				Notes
	Lower Limit		Upper Limit		Lower Limit		Upper Limit		
	Min.	Max.	Min.	Max.	Min.	Max.	Min.	Max.	
Clock Period T	Ttr	-	-	-	Ttr	-	-	T	a
Master Mode: Clock generated by transmitter or receiver									
HIGH tHC	0.35Ttr	-	-	-	0.35Ttr	-	-	-	b
Low tLC	0.35Ttr	-	-	-	0.35Ttr	-	-	-	b
Slave Mode: Clock accepted by transmitter or receiver									
HIGH tHC	-	0.35Ttr	-	-	-	0.35Ttr	-	-	c
Low tLC	-	0.35Ttr	-	-	-	0.35Ttr	-	-	c
Rise time tRC	-	-	0.15Ttr	-	-	-	-	-	d
Transceiver									
Delay tdtr	-	-	-	0.8Ttr	-	-	-	-	e
Hold time thtr	0	-	-	-	-	-	-	-	d
Receiver									
Setup time tsr	-	-	-	-	-	0.2Tr	-	-	f
Hold time thr	-	-	-	-	-	0	-	-	f

Table 21: Timing for I²S Transmitters and Receivers

a. The system clock period T must be greater than T_{tr} and T_r because both the transmitter and receiver have to be able to handle the data transfer rate.
b. At all data rates in master mode, the transmitter or receiver generates a clock signal with a fixed mark/space ratio. For this reason, t_{HC} and t_{LC} are specified with respect to T.
c. In slave mode, the transmitter and receiver need a clock signal with minimum HIGH and LOW periods so that they can detect the signal. So long as the minimum periods are greater than $0.35T_r$, any clock that meets the requirements can be used.
d. Because the delay (t_{dtr}) and the maximum transmitter speed (defined by T_{tr}) are related, a fast transmitter driven by a slow clock edge can result in t_{dtr} not exceeding t_{RC} which means t_{htr} becomes zero or negative. Therefore, the transmitter has to guarantee that t_{htr} is greater than or equal to zero, so long as the clock rise-time t_{RC} is not more than t_{RCmax}, where t_{RCmax} is not less than $0.15T_{tr}$.
e. To allow data to be clocked out on a falling edge, the delay is specified with respect to the rising edge of the clock signal and T, always giving the receiver sufficient setup time.
f. The data setup and hold time must not be less than the specified receiver setup and hold time.

2.7 LTE Coexistence interface

An external handshake interface is available[4] to enable signaling between the JODY-W1 series modules and an external co-located wireless device to manage wireless medium sharing for optimal performance.

[4] Firmware support is pending. Contact u-blox support for further information.

CONFIDENTIAL

3 Pin definition

3.1 Pin description

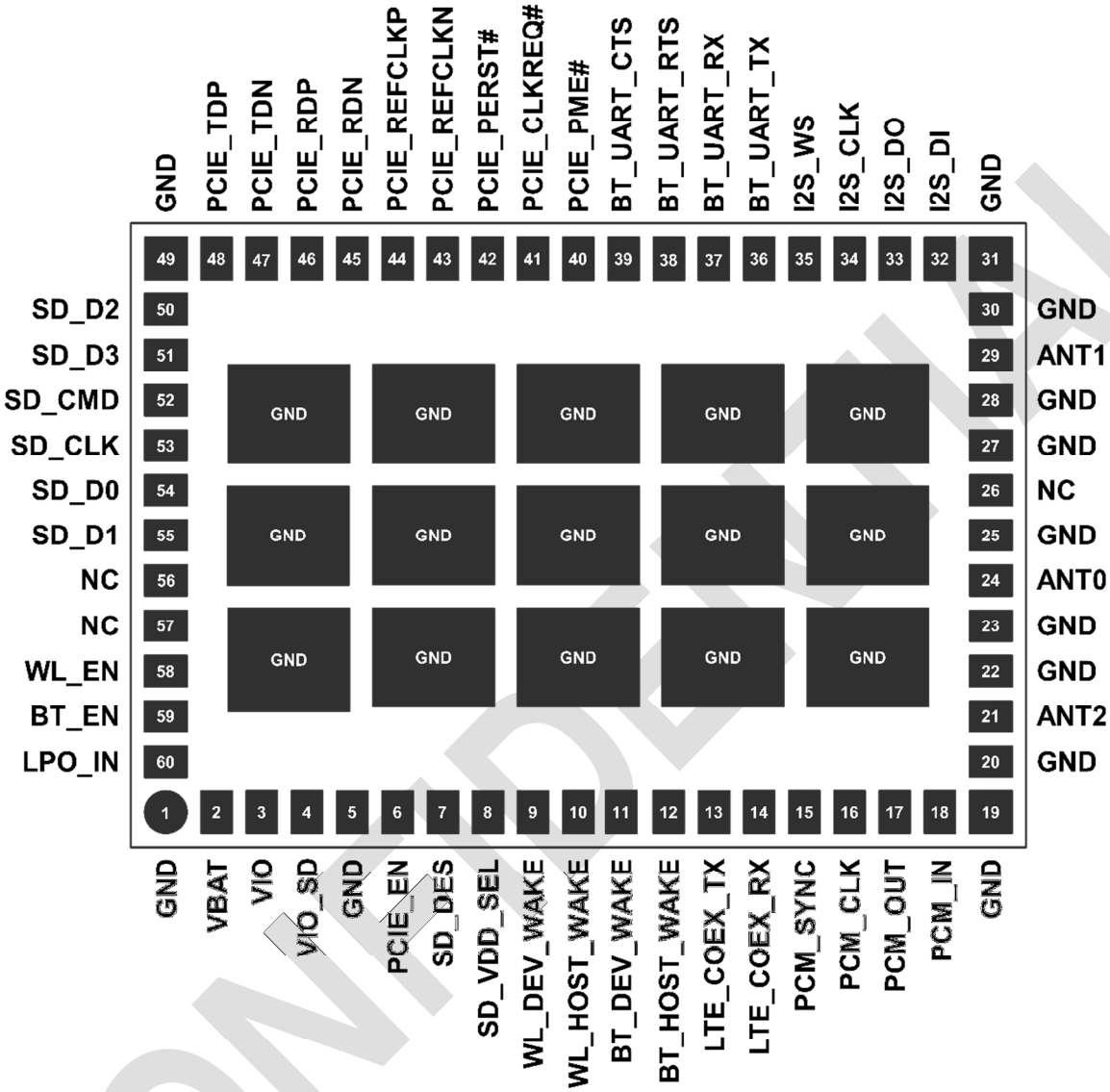

Figure 18: Pin assignment (top view)

No.	Name	Pin Type	Description	Power Supply Domain
1	GND	Ground	Ground	
2	VBAT	Power	3.2 V < VBAT < 4.8 V	
3	VIO	Power	VIO Supply (1.8 V or 3.3 V)	
4	VIO_SD	Power	VIO Supply (1.8 V or 3.3 V) for SDIO and PCIe Out-of-Band signals	
5	GND	Ground	Ground	
6	PCIE_EN	I	See Table 6 for Host Interface selection	VIO
7	SD_DES	I	See Table 6 for Host Interface selection	VIO
8	SD_VDD_SEL	I	See Table 6 for Host Interface selection	VIO
9	WL_DEV_WAKE	I	Wi-Fi device wake-up signal. Asserted: Wi-Fi device must wake-up or remain awake	VIO

CONFIDENTIAL

No.	Name	Pin Type	Description	Power Supply Domain
			De-asserted: Wi-Fi device may sleep when the sleep criteria is met	
10	WL_HOST_WAKE	O	Wi-Fi HOST wake-up signal Asserted: Host device must wake-up or remain awake De-asserted: Host device may sleep when the sleep criteria is met	VIO
11	BT_DEV_WAKE	I	Bluetooth device wake-up signal: Asserted: Bluetooth device must wake-up or remain awake De-asserted: Bluetooth device may sleep when sleep criteria are met.	VIO
12	BT_HOST_WAKE	O	Bluetooth Host wake-up signal: Asserted: Host device must wake-up or remain awake De-asserted: Host device may sleep when sleep criteria are met	VIO
13	LTE_COEX_TX	O	Coexistence WCI2 interface. TX signal	VIO
14	LTE_COEX_RX	I	Coexistence WCI2 interface. RX signal	VIO
15	PCM_SYNC	I/O	PCM sync, can be output (master) or input (slave)	VIO
16	PCM_CLK	I/O	PCM clock, can be output (master) or input (slave)	VIO
17	PCM_OUT	O	PCM data output	VIO
18	PCM_IN	I	PCM data input	VIO
19	GND	Ground	Ground	
20	GND	Ground	Ground	
21	ANT2	I/O, RF	Antenna pin (refer to section 1.5 Block diagrams)	
22	GND	Ground	Ground	
23	GND	Ground	Ground	
24	ANT0	I/O, RF	Antenna pin (refer to section 1.5 Block diagrams)	
25	GND	Ground	Ground	
26	NC	-	Reserved antenna pin. Do not connect.	
27	GND	Ground	Ground	
28	GND	Ground	Ground	
29	ANT1	I/O, RF	Antenna pin (refer to section 1.5 Block diagrams)	
30	GND	Ground	Ground	
31	GND	Ground	Ground	
32	I2S_DI	I/O	Reserved for I²S interface. Do not connect! To connect a I²S interface the PCM pins can be used. The PCM interface can be configured as an I²S interface. See chapter 2.5 for more information.	VIO
33	I2S_DO	I/O		VIO
34	I2S_CLK	I/O		VIO
35	I2S_WS	I/O		VIO
36	BT_UART_TX	O	Fast UART serial data output for the Bluetooth device	VIO
37	BT_UART_RX	I	Fast UART serial data input for the Bluetooth device	VIO
38	BT_UART_RTS	O	Fast UART active-low request-to-send signal for the Bluetooth device	VIO
39	BT_UART_CTS	I	Fast UART active-low clear-to-send signal for the Bluetooth device	VIO
40	PCIE_PME#	OD	PCI power management event output	VIO_SD
41	PCIE_CLKREQ#	OD	PCIe clock request signal	VIO_SD
42	PCIE_PERST#	I	PCIe System reset	VIO_SD
43	PCIE_REFCLKN	I	PCIe 100 MHz clock differential input, AC coupling capacitors 100 pF included in the module.	
44	PCIE_REFCLKP	I		
45	PCIE_RDN	I	PCIe receiver differential input, DC coupled inputs, use 100 nF AC coupling capacitors placed closer to the Host TDN/TDP differential output	
46	PCIE_RDP	I		

CONFIDENTIAL

No.	Name	Pin Type	Description	Power Supply Domain
47	PCIE_TDN	O	PCIe transmitter differential output, AC coupling capacitors 100 nF included in the module, connect to the Host RDN/RDP input directly	
48	PCIE_TDP	O		
49	GND	Ground	Ground	
50	SD_D2	I/O	SDIO Data line bit [2]	VIO_SD
51	SD_D3	I/O	SDIO Data line bit [3]	VIO_SD
52	SD_CMD	I/O	SDIO Command line	VIO_SD
53	SD_CLK	I	SDIO Clock input	VIO_SD
54	SD_D0	I/O	SDIO Data line bit [0]	VIO_SD
55	SD_D1	I/O	SDIO Data line bit [1]	VIO_SD
56	NC	-	Leave unconnected (internally connected to the USB interface, debugging only)	
57	NC	-	Leave unconnected (internally connected to the USB interface, debugging only)	
58	WL_EN	I	Power up or power down the Wi-Fi section of the chipset (like a reset)	VIO
59	BT_EN	I	Power up or power down the Bluetooth section of the chipset (like a reset)	VIO
60	LPO_IN	I	Clock input for external sleep clock source (32.768 kHz)	
EP	GND	Ground	15 Ground/Thermal exposed pins, connect to the ground	

Table 22: JODY-W1 series pin description

CONFIDENTIAL

4 Electrical specification

⚠ Stressing the device above one or more of the ratings listed in the Absolute Maximum Rating section may cause permanent damage. These are stress ratings only. Operating the module at these or at any conditions other than those specified in the Operating conditions section of this document should be avoided. Exposure to absolute maximum rating conditions for extended periods may affect device reliability.

☞ Operating condition ranges define limits within which the functionality of the device is guaranteed. Where application information is given, it is advisory only and is not part of the specification.

4.1 Absolute maximum ratings

Symbol	Description	Min.	Max.	Units
VBAT	Power supply voltage	-0.5	6.0	V
VIO	I/O supply voltage 1.8V/3.3V	-0.5	3.9	V
VIO_SD	SDIO supply voltage 1.8V/3.3V	-0.5	3.9	V
$T_{STORAGE}$	Storage temperature	-40	+85	°C

Table 23: Absolute maximum ratings

⚠ The product is not protected against overvoltage or reversed voltages. If necessary, voltage spikes exceeding the power supply voltage specification, given in table above, must be limited to values within the specified boundaries by using appropriate protection devices.

4.2 Operating conditions

Symbol	Parameter	Min.	Typ	Max.	Units
VBAT	Power supply voltage	3.2	-	4.8	V
VIO	I/O supply voltage 1.8V/3.3V	1.62	-	3.63	V
VIO_SD	SDIO supply voltage 1.8V/3.3V	1.62	-	3.63	V
T_A	Ambient operating temperature	-40	-	+85	°C
Ripple Noise	Peak-to-peak voltage ripple on VBAT and VIO supply lines.	-	-	10	mV

Table 24: Operating conditions

☞ For temperature above 55 °C, the radio transceiver autonomously monitors its junction temperature and employs transmit duty cycle throttling to regulate power dissipation and thereby ensures that the junction temperature is safely below 115 °C. Transmit duty cycle throttling can lower throughput to up to 25% of maximum throughput at nominal temperature.

4.3 Digital pad ratings

The following ratings are only for the SDIO interface I/O Pins and PCIe Out-of-Band signals (PCIE_PERST_L, PCIE_PME_L and PCIE_CLKREQ_L).

Symbol	Parameter	VIO_SD	Min.	Max.	Units
V_{IH}	Input high voltage	1.8 V	1.27	-	V
		3.3 V	0.625*VIO_SD	-	V
V_{IL}	Input low voltage	1.8 V	-	0.58	V
		3.3 V	-	0.25*VIO_SD	V
V_{OH}	Output high voltage @ 2mA	1.8 V	1.4	-	V
		3.3 V	0.75*VIO_SD	-	V
V_{OH}	Output low voltage @ 2mA	1.8 V	-	0.45	V
		3.3 V	-	0.125*VIO_SD	V

CONFIDENTIAL

Table 25: DC characteristics SDIO digital I/O pins

The following ratings are for all other digital I/O pins including GPIOs.

Symbol	Parameter	VIO	Min.	Max.	Units
V_{IH}	Input high voltage	1.8 V	0.65*VIO	-	V
		3.3 V	2.0	-	V
V_{IL}	Input low voltage	1.8 V	-	0.35*VIO	V
		3.3 V	-	0.8	V
V_{OH}	Output high voltage @ 2mA	1.8 V	VIO-0.45	-	V
		3.3 V	VIO-0.4	-	V
V_{OH}	Output low voltage @ 2mA	1.8 V	-	0.45	V
		3.3 V	-	0.4	V

Table 26: DC characteristics digital I/O pins

4.4 Wi-Fi power consumption

Operation mode: 2.4 GHz and 5 GHz Wi-Fi, BT powered down	Typical peak VBAT (3.3 V) current, mA	Typical peak VBAT (3.3 V) idle current, mA	Typical peak VIO (1.8 V) current, µA
TX modes			
CCK 11 Mbps, BW20, Ch7, Core2, 18 dBm	360	110	60
MSC7, HT20 , Ch7, Core2, 14dBm	270	110	60
BPSK, 6 Mbps, HT20, Ch100, Core1, 17 dBm	520	135	60
BPSK, 6 Mbps, HT20, Ch100, Core2, 17 dBm	450	135	60
MCS7, HT20, SGI, CH100, Core1, 14 dBm	440	135	60
MCS7, HT20, SGI, CH100, Core2, 14 dBm	420	135	60
MCS7, HT40, SGI, Ch100, Core1, 14 dBm	460	165	60
MCS7, HT40, SGI, Ch100, Core2, 14 dBm	430	165	60
MCS9, VHT40, SGI, Ch100, Core1, 12 dBm	430	165	60
MCS9, VHT40, SGI, Ch100, Core2, 12 dBm	420	165	60
MCS9, VHT80, SGI, Ch100, Core1, 12 dBm	470	240	60
MCS9, VHT80, SGI, Ch100, Core2, 12 dBm	470	240	60
MCS9, VHT40, SGI, Ch100, 2 streams, 12 dBm	760	165	60
MCS9, VHT80, SGI, Ch100, 2 streams, 12 dBm	820	240	60
RX modes			
MCS7, HT40, Ch100, Core2	190	165	60
MCS7, HT20, Ch7, Core2	120	110	60
1 Mbps, BW20, Ch7, Core2	110	110	60
6 Mbps, BW20, Ch100, Core2	140	135	60
MCS7, HT20, Ch100, Core2	140	135	60
MCS7, HT20, Ch100, Core1	140	135	60
MCS0, HT80, Ch100, Core1	245	240	60

Table 27: Current consumption for different Wi-Fi TX- and RX-modes at 25 °C

Operation mode: Power save modes	Typical – VBAT (3.3 V) current, mA	Typical – VIO (1.8 V) current, µA	Typical – VIO_SD (1.8 V) current, µA
Sleep (Idle, not associated), FW not loaded	13	30	35
Sleep (Idle, not associated), FW loaded	0.005	340	52
Wi-Fi power save, DTIM 1	2.5	280	52
Wi-Fi power save, DTIM 2	1.3	305	52
Wi-Fi power save, DTIM 3	0.85	315	52

CONFIDENTIAL

Table 28: Current consumption for Wi-Fi power-save modes at 25 °C

4.5 Bluetooth power consumption

Operation mode: Bluetooth mode with Wi-Fi powered down	Typical VBAT (3.3 V) current, µA	Typical VIO (1.8 V) current, µA	Typical VIO (3.3 V) current, µA
Sleep	5.3	130	170
Standard 1.28s inquiry scan	150	150	185
DM5/DH5	56000	40	50
BLE scan	160	150	185
BLE advertising, unconnectable 1 sec	60	150	185

Table 29: Current consumption for Bluetooth operation at 25 °C

4.6 Radio specifications

4.6.1 Bluetooth

Parameter	Specifications
RF Frequency Range	2.402 – 2.480 GHz
Supported Modes	Bluetooth v4.2+EDR
Number of channels	79
Modulation	1 Mbps: GFSK (BDR) 2 Mbps: π/4 DQPSK (EDR) 3 Mbps: 8DQPSK (EDR)
Transmit Power	+9 dBm ± 2 dB
Receiver Sensitivity	BDR: -93 dBm ± 1.5 dB EDR: -89 dBm ± 1.5 dB BLE: -95 dBm ± 1.5 dB

Table 30: Bluetooth radio parameters

4.6.2 Wi-Fi

The JODY-W1 series modules support dual-band Wi-Fi with 802.11a/b/g/n/ac operation in the 2.4 GHz and 5 GHz radio bands.

Parameter		Operation Mode	802.11 EVM limit	Specification (typ. output power tolerance ± 2 dB)
Maximum transmit power	2.4 GHz	DSSS/CCK	-9 dB	18 dBm
		OFDM, BPSK	-8 dB	15 dBm
		OFDM, QPSK	-13 dB	15 dBm
		OFDM, 16-QAM	-19 dB	15 dBm
		OFDM, 64-QAM, 3/4	-25 dB	13 dBm
		OFDM, 64-QAM, 5/6	-28 dB	13 dBm
	5 GHz	OFDM, BPSK	-8 dB	15 dBm
		OFDM, QPSK	-13 dB	15 dBm
		OFDM, 16-QAM	-19 dB	15 dBm
		OFDM, 64-QAM, 3/4	-25 dB	13 dBm
		OFDM, 64-QAM, 5/6	-28 dB	13 dBm
		OFDM, 256-QAM, 3/4	-30 dB	8 dBm
		OFDM, 256-QAM, 5/6	-32 dB	8 dBm

Table 31: Wi-Fi Radio maximum transmit power parameter

CONFIDENTIAL

Parameter		Operation Mode			Specification
RF Frequency range		802.11b/g/n			2.400 – 2.500 GHz
		802.11a/n/ac			4.900 – 5.845 GHz
Modulation		802.11b			CCK and DSSS
		802.11a/g/n/ac			OFDM
Supported data rates		802.11b			1, 2, 5.5, 11 Mbps
		802.11a/g			6, 9, 12, 18, 24, 36, 48, 54 Mbps
		802.11n SISO			MCS0 - MCS7 (150 Mbps)
		802.11n MIMO			MCS8 – MCS15 (300 Mbps)
		802.11ac SISO			MCS0 – MCS9 (433 Mbps)
		802.11ac MIMO			MCS0 – MCS9 (867 Mbps)
Supported channel bandwidth		2.4 GHz band 5 GHz band			20 MHz 20, 40, 80 MHz
Supported guard interval (GI)		802.11n			400, 800 ns
		802.11ac			Short guard interval supported
Receiver sensitivity	2.4 GHz	802.11b		1 Mbps	-98 dBm ± 1 dB
				11 Mbps	-90 dBm ± 1 dB
		802.11g SISO		6 Mbps	-95 dBm ± 1 dB
				54 Mbps	-78 dBm ± 1 dB
		802.11n SISO	20 MHz	MCS0	-95 dBm ± 1 dB
				MCS7	-75 dBm ± 1 dB
		802.11n MIMO	20 MHz	MCS0	-96 dBm ± 1 dB
				MCS7	-79 dBm ± 1 dB
	5 GHz	802.11n SISO	40 MHz	MCS0	-89 dBm ± 1 dB
				MCS7	-70 dBm ± 1 dB
		802.11n MIMO	40 MHz	MCS8	-90 dBm ± 1 dB / core
				MCS15	-70 dBm ± 1 dB / core
		802.11ac SISO	20 MHz	MCS0	-92 dBm ± 1 dB
				MCS8	-68 dBm ± 1 dB
		802.11ac MIMO	20 MHz	MCS0	-92 dBm ± 1 dB / core
				MCS8	-68 dBm ± 1 dB / core
		802.11ac SISO	40 MHz	MCS0	-89 dBm ± 1 dB
				MCS9	-64 dBm ± 1 dB
		802.11ac MIMO	40 MHz	MCS0	-89 dBm ± 1 dB / core
				MCS9	-64 dBm ± 1 dB / core
		802.11ac SISO	80 MHz	MCS0	-86 dBm ± 1 dB
				MCS9	-60 dBm ± 1 dB
		802.11ac MIMO	80 MHz	MCS0	-86 dBm ± 1 dB / core
				MCS9	-60 dBm ± 1 dB / core

Table 32: Wi-Fi Radio parameters

4.7 LTE Coexistence performance

4.7.1 Wi-Fi receiver performance with LTE coexistence filter

The figures below show Wi-Fi sensitivity of JODY-W1 modules including dedicated high performance coexistence filter in the presence of a LTE interferer allocated in any of the bands - 7, 38, 40 or 41 . The modules are specified according to Table 3.

CONFIDENTIAL

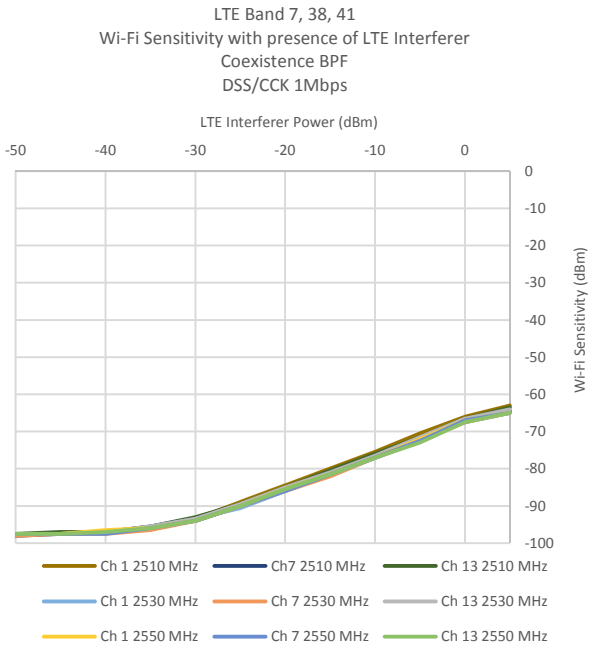

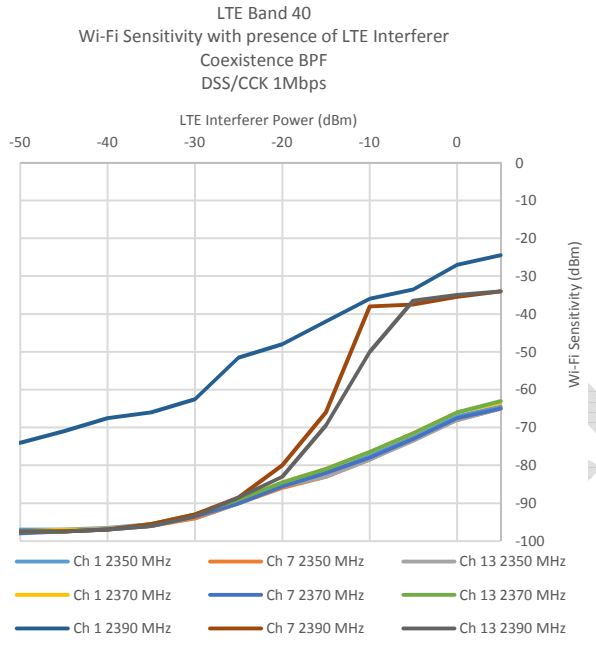

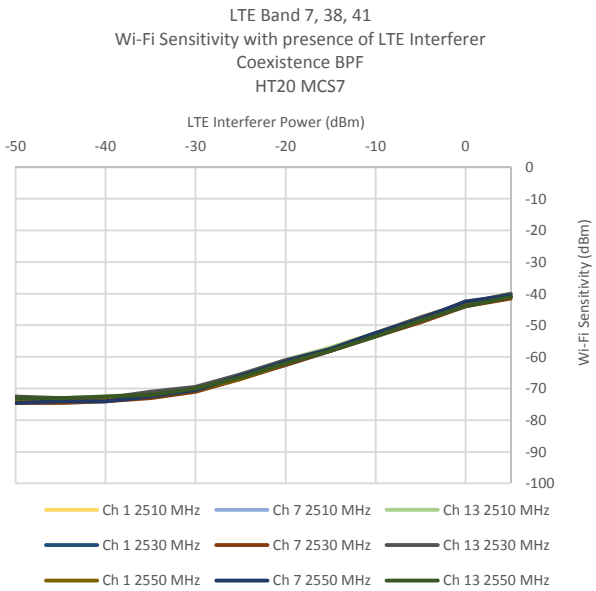

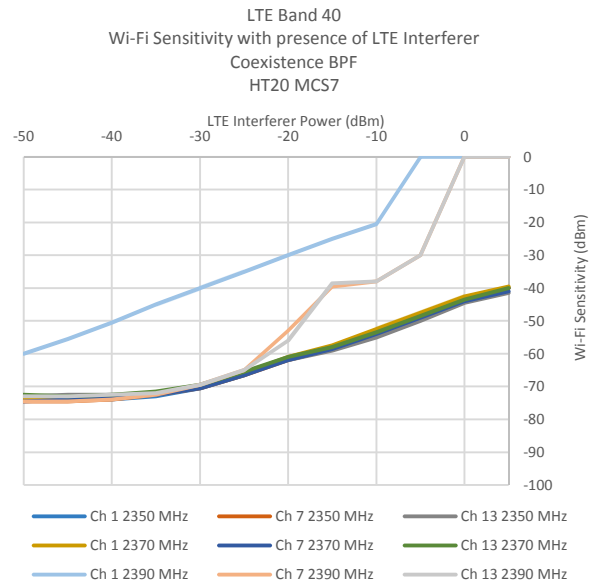

4.7.2 Wi-Fi receiver performance with ordinary Wi-Fi Band pass filter

The figures below shows Wi-Fi sensitivity of JODY-W1 modules including a standard Wi-Fi band pass filter in the presence of a LTE interferer allocated in any of the bands - 7, 38, 40, and 41. The JODY-W1 modules are specified according to Table 3.

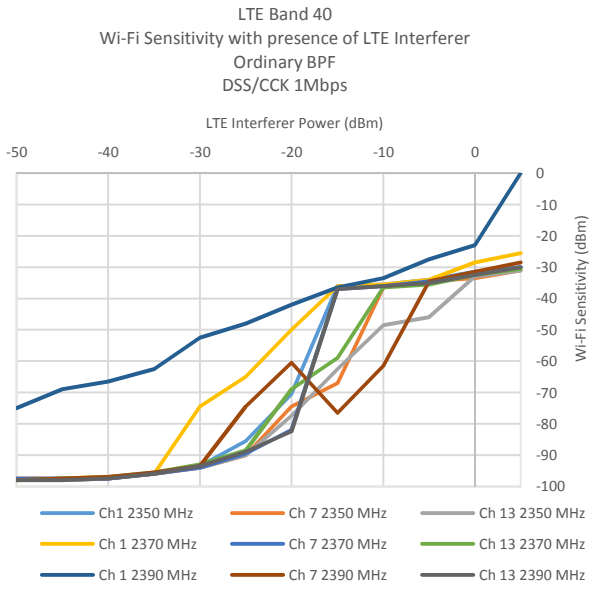

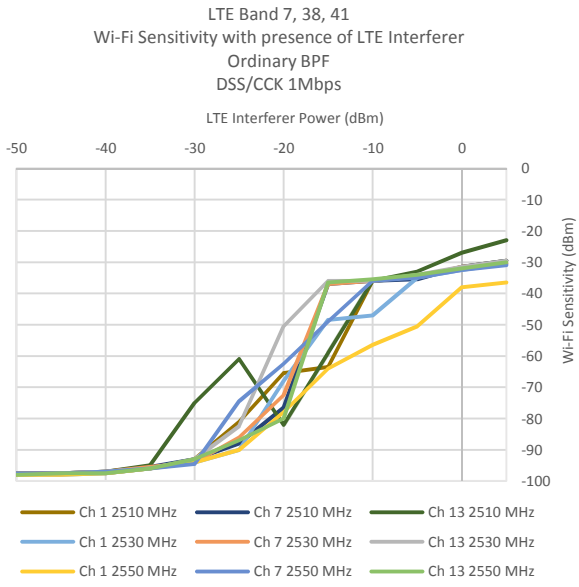

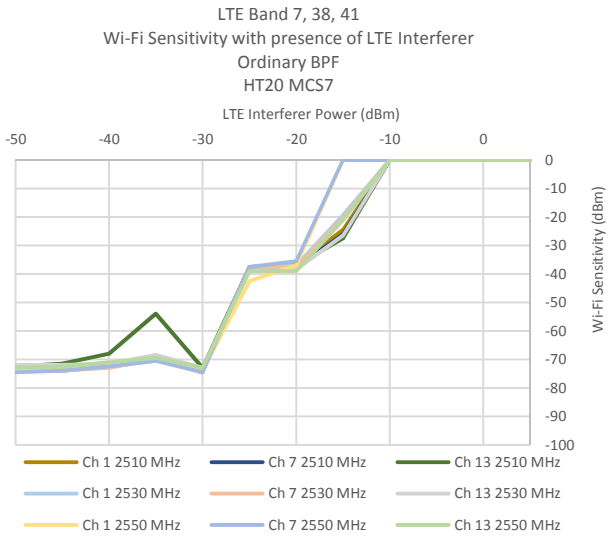

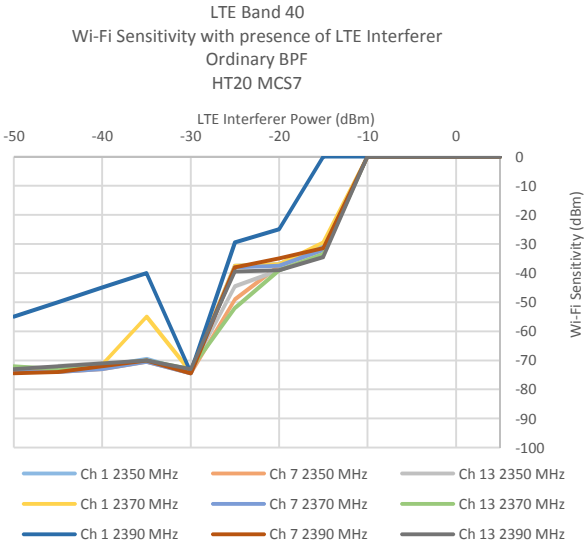

4.8 Module thermal information

All measurements are done according to the JEDEC standards - JESD51-2A for the junction to ambient, JESD51-8 for the junction to board and JESD51-14 for the junction to case values. For the measurements, a 2S2P board with the dimension of 101.5 x 114.5 mm was used.

Symbol	Parameter	Condition	Value	Units
θ_{JA}	Junction to ambient thermal resistance $\theta_{JA} = (T_J - T_A) / P_H$ T_J = Junction temperature T_A = Ambient temperature P_H = Dissipated power from device	JESD51-2A JEDEC 2S2P board inside thermal chamber, No air flow	19.4	°C/W
Ψ_{JT}	Junction to top of package thermal characterization parameter $\theta_{JA} = (T_J - T_T) / P_H$ T_T = Top of package temperature	JESD51-2A JEDEC 2S2P board inside thermal chamber, No air flow	13.6	°C/W
Ψ_{JB}	Junction to bottom thermal characterization parameter $\theta_{JA} = (T_J - T_B) / P_H$ T_B = Board temperature	JESD51-2A JEDEC 2S2P board inside thermal chamber No air flow	13.4	°C/W
θ_{JC}	Junction to case shielding thermal resistance $\theta_{JA} = (T_J - T_C) / P_H$ T_C = Case temperature	JESD51-14 JEDEC 2S2P board with ring cold plate, No air flow	12.5	°C/W
θ_{JB}	Junction to board thermal resistance $\theta_{JA} = (T_J - T_B) / P_H$ T_B = Board temperature	JESD51-8 JEDEC 2S2P board with ring cold plate, No air flow	12.3	°C/W

Table 33: Module thermal information

CONFIDENTIAL

5 Host drivers and firmware

5.1 General principle

The JODY-W1 series module does not contain any persistent software. A firmware binary will be downloaded by the host operating system driver on system start-up. Separate driver packages, including the firmware binaries, are available for PCIe and SDIO Wi-Fi host interface operation.

5.2 Supported operating systems

5.2.1 Linux

Linux device drivers are available free of charge from the chipset manufacturer. A Software License Agreement (SLA) must be signed with the chipset manufacturer to obtain the driver package. This package includes:

- Dedicated Kernel driver, to bind the Wi-Fi device to the kernel. The driver sources will be provided.
- A dedicated Wi-Fi firmware image, which will be uploaded during initialization of the Wi-Fi device.
- A dedicated Bluetooth firmware image, which will be uploaded during initialization of the Bluetooth device.
- Laboratory and manufacturing tools.

For a detailed description of the driver packages, refer to JODY-W1 series System Integration Manual [2].

CONFIDENTIAL

6 Mechanical specifications

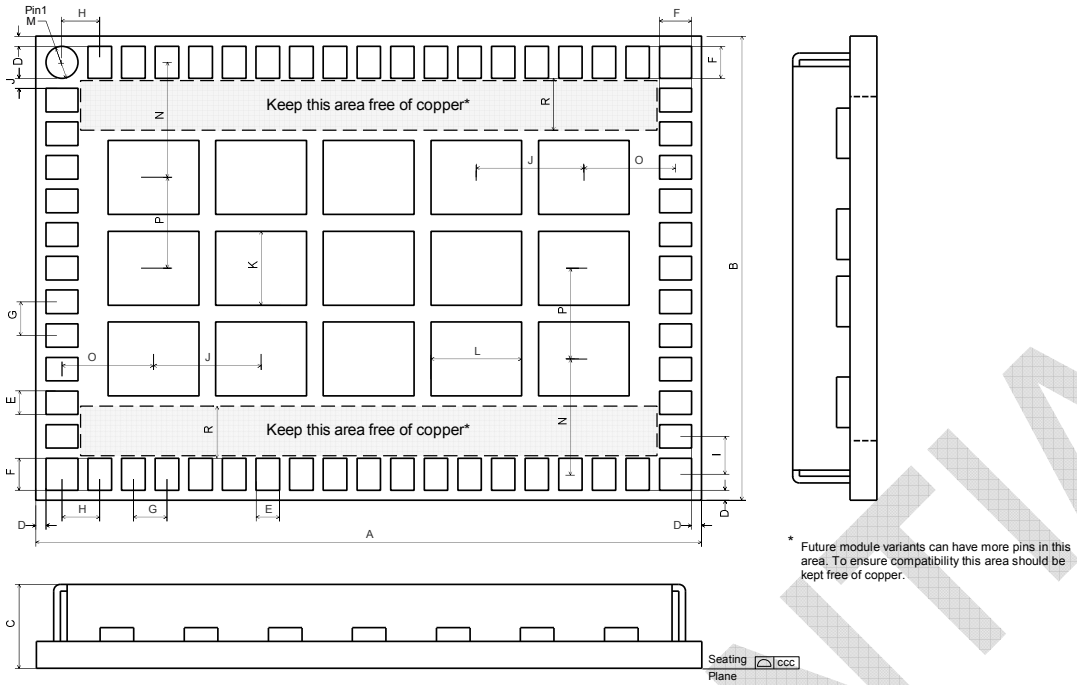

Figure 19: JODY-W1 series dimensions (bottom view)

Parameter	Description	Typical		Tolerance	
A	Module Length [mm]	19.8	(779.5 mil)	+0.35/-0.1	(+13.8/-3.9 mil)
B	Module Width [mm]	13.8	(543.3 mil)	+0.1/-0.1	(+3.9/-3.9 mil)
C	Module Thickness [mm]	2.5	(98.4 mil)	+0.2/-0.2	(+7.9/-7.9 mil)
ccc	Seating Plane Coplanarity [mm]	<0.1	(3.94 mil)		
D	PCB Edge to Pin Edge [mm]	0.3	(11.8 mil)	+0.20/-0.20	(+7.9/-7.9 mil)
E	Pin Width [mm]	0.7	(27.6 mil)	+0.05/-0.05	(+2.0/-2.0 mil)
F	Pin Length [mm]	0.95	(37.4 mil)	+0.05/-0.05	(+2.0/-2.0 mil)
G	Pin to Pin Pitch [mm]	1.0	(39.4 mil)	+0.02/-0.02	(+0.8/-0.8 mil)
H	Horizontal Corner Pin to Pin Pitch [mm]	1.125	(44.3 mil)	+0.02/-0.02	(+0.8/-0.8 mil)
I	Lateral Corner Pin to Pin Pitch [mm]	1.125	(44.3 mil)	+0.02/-0.02	(+0.8/-0.8 mil)
J	Horizontal Thermal Pads Pitch [mm]	3.2	(126.0 mil)	+0.02/-0.02	(+0.8/-0.8 mil)
K	Thermal Pad Height [mm]	2.2	(86 6 mil)	+0.1/-0.1	(+3.9/-3.9 mil)
L	Thermal Pad Length [mm]	2.7	(106.3 mil)	+0.1/-0.1	(+3.9/-3.9 mil)
M	Pin 1 Diameter [mm]	0.95	(37.4 mil)	+0.05/-0.05	(+2.0/-2.0 mil)
N	Horizontal Pin to Thermal Pad Pitch [mm]	3.425	(134.8 mil)	+0.02/-0.02	(+0.8/-0.8 mil)
O	Lateral Pin to Thermal Pad Distance [mm]	2.725	(107.3 mil)	+0.02/-0.02	(+0.8/-0.8 mil)
P	Lateral Thermal Pads Pitch [mm]	2.7	(106.3 mil)	+0.02/-0.02	(+0.8/-0.8 mil)
R	Reserved area for future module variants	1.55	(61.0 mil)	+0.05/-0.05	(+2.0/-2.0 mil)

CONFIDENTIAL

7 Approvals

The JODY-W1 series modules comply with the regulatory demands of Federal Communications Commission (FCC), Industry Canada (IC) and the CE mark[5].

See JODY-W1 series System Integration Manual [2] for detailed information about regulatory compliance requirements of end products that use JODY-W1 series module.

7.1 Compliance with the RoHS directive

The JODY-W1 series modules comply with the "Directive 2011/65/EU of the European Parliament and the Council on the Restriction of Use of certain Hazardous Substances in Electrical and Electronic Equipment" (RoHS).
No natural rubbers, hygroscopic materials, or materials containing asbestos are employed.

7.2 European Union regulatory compliance

The JODY-W1 series modules comply with the essential requirements and other relevant provisions of Radio Equipment Directive (RED) 2014/53/EU.[6]

Essential Requirements **Radio Equipment Directive 2014/53/EU**	**Standards**
Safety & Health (Article 3.1a)	IEC 60950-1:2005 (2nd Edition) + A1:2009 EN 60950-1:2006 + A11:2009 + A1:2010 + A12:2011 EN 62311:2008 (Wi-Fi) EN 62479:2010 (Bluetooth)
EMC (Article 3.1b)	EN 301 489-1 V2.1.1 EN 301 489-17 V3.1.1
Radio Spectrum Efficiency (Article 3.2)	EN 300 328 V2.1.1 EN 301 893 V2.1.1 EN 300 440 V2.1.1

Essential Requirements **RoHS Directive 2011/65/EU**	**Standards**
Prevention (Article 4.1)	EN 50581:2012

7.3 FCC and IC compliance

This section contains the FCC and IC compliance information for the JODY-W1 series modules.

CONFIDENTIAL

[5] Approvals are pending.
[6] The approvals for JODY-W167-00A, JODY-W167-03A and JODY-W167-00B are pending currently.

7.3.1 FCC and ISED IDs

Model[7]	FCC ID	ISED ID
JODY-W164-07A, JODY-W163-04A, JODY-W163-05A, JODY-W164-04A, JODY-W164-05A	XPYJODYW164-07A	8595A-JODYW16407A
JODY-W164-03A, JODY-W163-13A	XPYJODYW164	8595A-JODYW164
JODY-W167-00A, JODY-W167-03A, JODY-W167-00B	XPYJODYW167	8595A-JODYW167

Table 34: FCC and IC IDs for different variants of JODY-W1 series modules

☞ The FCC and ISED approvals for JODY-W163-04A, JODY-W163-05A, JODY-W163-13A, JODY-W164-04A, JODY-W164-05A, JODY-W167-00A, JODY-W167-03A, and JODY-W167-00B are pending currently. The FCC and ISED IDs for these variants might change.

7.3.2 FCC compliance statement

The JODY-W1 series modules have modular approval, and comply with Part 15 of the FCC Rules. Operation is subject to the following two conditions:

1. This device may not cause harmful interference, and
2. This device must accept any interference received, including interference that may cause undesired operation

⚠ Any changes or modifications NOT explicitly APPROVED by u-blox could cause the JODY-W1 series module to cease to comply with FCC rules part 15 thus void the user's authority to operate the equipment.

The internal / external antenna(s) used for this module must provide a separation distance of at least 20 cm from all persons and must not be co-located or operating in conjunction with any other antenna or transmitter.

In accordance with 47 CFR § 15.19, the end product into which this module is integrated shall bear the following statement in a conspicuous location on the device:

“This device complies with Part 15 of the FCC Rules. Operation is subject to the following two conditions:

1. This device may not cause harmful interference, and
2. This device must accept any interference received, including interference that may cause undesired operation.”

When the end-product is so small or for such use that it is not practical to place the above statement on it, the information shall be placed in a prominent location in the instruction manual or pamphlet supplied to the user or on the container in which the device is marketed. However, the FCC ID label must be displayed on the device.

If the end-product will be installed in locations where the end-user is not able to see the FCC ID and/or this statement, the FCC ID and the statement shall also be included in the end-product manual.

☞ The outside of final products containing the JODY-W1 module must display in a user accessible area a label referring to the enclosed module[8]. This exterior label can use wording such as the following: “Contains Transmitter Module FCC ID: XPYJODYW164” or “Contains FCC ID: XPYJODYW164”.

[7] The model name is identical to the ordering code (cf. Table 41)
[8] The FCC and IC IDs for the JODY-W1 series module variants are shown in Table 34. Select the applicable ID.

CONFIDENTIAL

7.3.3 ISED compliance statement

The JODY-W1 series module complies with ISED (Innovation, Science and Economic Development Canada)[9] license-exempt RSSs. Operation is subject to the following two conditions:

(1) This device may not cause interference, and

(2) This device must accept any interference, including interference that may cause undesired operation of the device.

☞ Any notification to the end user of installation or removal instructions about the integrated radio module is NOT allowed. Unauthorized modification could void authority to use this equipment.

This equipment complies with ISED RSS-102 radiation exposure limits set forth for an uncontrolled environment. This equipment should be installed and operated with minimum distance 20 cm between the radiator and your body.

This radio transmitter IC: 8595A-JODYW164 / IC: 8595A-JODYW16407A / IC: 8595A-JODYW167 has been approved by ISED to operate with the antenna types listed below with the maximum permissible gain indicated. Antenna types not included in this list, having a gain greater than the maximum gain indicated for that type, are strictly prohibited for use with this device.

☞ Operation in the band 5150–5250 MHz is only for indoor use to reduce the potential for harmful interference to co-channel mobile satellite systems;

☞ Operation in the 5600-5650 MHz band is not allowed in Canada. High-power radars are allocated as primary users (i.e. priority users) of the bands 5250-5350 MHz and 5650-5850 MHz and that these radars could cause interference and/or damage to LE-LAN devices.

The ISED certification label of a module shall be clearly visible at all times when installed in the host device; otherwise, the host device must be labeled to display the ISED certification number for the module, preceded by the words “Contains transmitter module”, or the word “Contains”, or similar wording expressing the same meaning, as follows: “Contains transmitter module IC: 8595A-JODYW164”[10].

Le présent appareil est conforme aux CNR d'ISED applicables aux appareils radio exempts de licence. L'exploitation est autorisée aux deux conditions suivantes:

(1) l'appareil ne doit pas produire de brouillage, et

(2) l'utilisateur de l'appareil doit accepter tout brouillage radioélectrique subi, même si le brouillage est susceptible d'en compromettre le fonctionnement.

Cet équipement est conforme aux limites d'exposition de rayonnement d'ISED RSS-102 déterminées pour un environnement non contrôlé. Cet équipement devrait être installé et actionné avec la distance minimum 20 cm entre le radiateur et votre corps.

Cet émetteur radio, IC: 8595A-JODYW164 / IC: 8595A-JODYW16407A / IC: 8595A-JODYW167 été approuvé par ISED pour fonctionner avec les types d’antenne énumérés ci-dessous avec le gain maximum autorisé et l’impédance nécessaire pour chaque type d’antenne indiqué. Les types d’antenne ne figurant pas dans cette liste et ayant un gain supérieur au gain maximum indiqué pour ce type-là sont strictement interdits d’utilisation avec cet appareil.

☞ Le dispositif de fonctionnement dans la bande 5150-5250 MHz est réservé à une utilisation en intérieur pour réduire le risque d'interférences nuisibles à la co-canal systèmes mobiles par satellite

[9] Formerly known as IC (Industry Canada).
[10] The FCC and IC IDs for the JODY-W1 series module variants are shown in Table 34. Select the applicable ID.

CONFIDENTIAL

☞ Opération dans la bande 5600-5650 MHz n'est pas autorisée au Canada. Haute puissance radars sont désignés comme utilisateurs principaux (c.-àutilisateurs prioritaires) des bandes 5250-5350 MHz et 5650-5850 MHz et que ces radars pourraient causer des interférences et / ou des dommages à dispositifs LAN-EL.

L'étiquette d'homologation d'ISED d'un module donné doit être posée sur l'appareil hôte à un endroit bien en vue en tout temps. En l'absence d'étiquette, l'appareil hôte doit porter une étiquette sur laquelle figure le numéro d'homologation du module d'ISED, précédé des mots « Contient un module d'émission », ou du mot « Contient », ou d'une formulation similaire allant dans le même sens et qui va comme suit : « Contient le module d'émission IC: 8595A-JODYW164 ».

This radio transmitter IC: 8595A-JODYW164 / IC: 8595A-JODYW16407A / IC: 8595A-JODYW167 has been approved by ISED to operate with the antenna types listed below with the maximum permissible gain indicated. Antenna types not included in this list, having a gain greater than the maximum gain indicated for that type, are strictly prohibited for use with this device.

Le présent émetteur radio IC: 8595A-JODYW164 / IC: 8595A-JODYW16407A / IC: 8595A-JODYW167 a été approuvé par ISED pour fonctionner avec les types d'antenne énumérés ci-dessous et ayant un gain admissible maximal. Les types d'antenne non inclus dans cette liste, et dont le gain est supérieur au gain maximal indiqué, sont strictement interdits pour l'exploitation de l'émetteur.

The internal / external antenna(s) used for this module must provide a separation distance of at least 20 cm from all persons and must not be co-located or operating in conjunction with any other antenna or transmitter.

☞ The approval type for all the JODY-W1 series variants is a single modular approval. Due to ISED Modular Approval Requirements (Source: RSP-100 Issue 10), any application which includes the module must be approved by the module manufacturer (u-blox). The application manufacturer must provide design data for the review procedure.

7.4 Certification in other countries

Regulatory approvals for using the JODY-W1 series module in other countries are planned.

7.5 Approved antennas

Refer to the JODY-W1 antenna reference design [3] for the specifications that must be fulfilled in the end product that uses radio type approval of the JODY-W1 module. The JODY-W1 antenna reference design provides PCB layout details and electrical specifications.

The approved antennas that can be connected to the JODY-W1 series module are listed in this section.

7.5.1 Wi-Fi operation

For Wi-Fi operation in the 2.4 GHz band and Wi-Fi operation in the 5 GHz band, the JODY-W1 series module has been tested and approved for use with the antennas listed in Table 35.

Manufacturer	Part Number	Antenna type	Peak gain [dBi]		Validated Regulatory Domain
			2.4 GHz band	5 GHz band	
Any	N/A	Dipole antenna	2	2	FCC/IC
Any	N/A	Dipole antenna	0	0	ETSI

Table 35: List of approved Wi-Fi antennas

⚠ Important: To be compliant to FCC §15.407(a) the EIRP is not allowed to exceed 125 mW (21 dBm) at any elevation angle above 30 degrees as measured from the horizon when operated as an outdoor access point in U-NII-1 band, 5.150-5.250 GHz.

CONFIDENTIAL

7.5.2 Bluetooth operation

For Bluetooth operation, the JODY-W1 series module has been tested and approved for use with the antennas listed in Table 36.

Manufacturer	Part Number	Antenna type	Peak gain [dBi]		Validated Regulatory Domain
			2.4 GHz band	5 GHz band	
Any	N/A	Dipole antenna	2	2	FCC/IC
Any	N/A	Dipole antenna	0	0	ETSI

Table 36: List of approved Bluetooth antennas

7.6 Bluetooth qualification

☞ The JODY-W1 series modules have been qualified as “Controller Subsystem” according to the Bluetooth 5.0 specification and are listed with the qualified design ID, QDID: 114915.

This means that there is no need to do any further qualification if the module is combined with a host stack that is Bluetooth-qualified as "Host Subsystem".

7.6.1 Bluetooth host stack

Several Bluetooth host stacks are available in the market. These host stacks are suited for different tasks and environments. These host stacks could differ based on their system requirements, supported Bluetooth profiles, cost, Bluetooth qualification, support and so on.

CONFIDENTIAL

8 Product handling

8.1 Packaging

The JODY-W1 series modules are delivered as hermetically sealed tape and reels, to enable efficient production, production lot set-up and tear-down. For more information about packaging, see the u-blox Package Information Guide [1].

8.1.1 Reels

The JODY-W1 series modules are deliverable in quantities of 500 pieces on a reel. The JODY-W1 series modules are shipped on reel Type A as described in the *u-blox Package Information Guide [1]*.

8.1.2 Tapes

The dimensions of the tapes are specified in Figure 20.

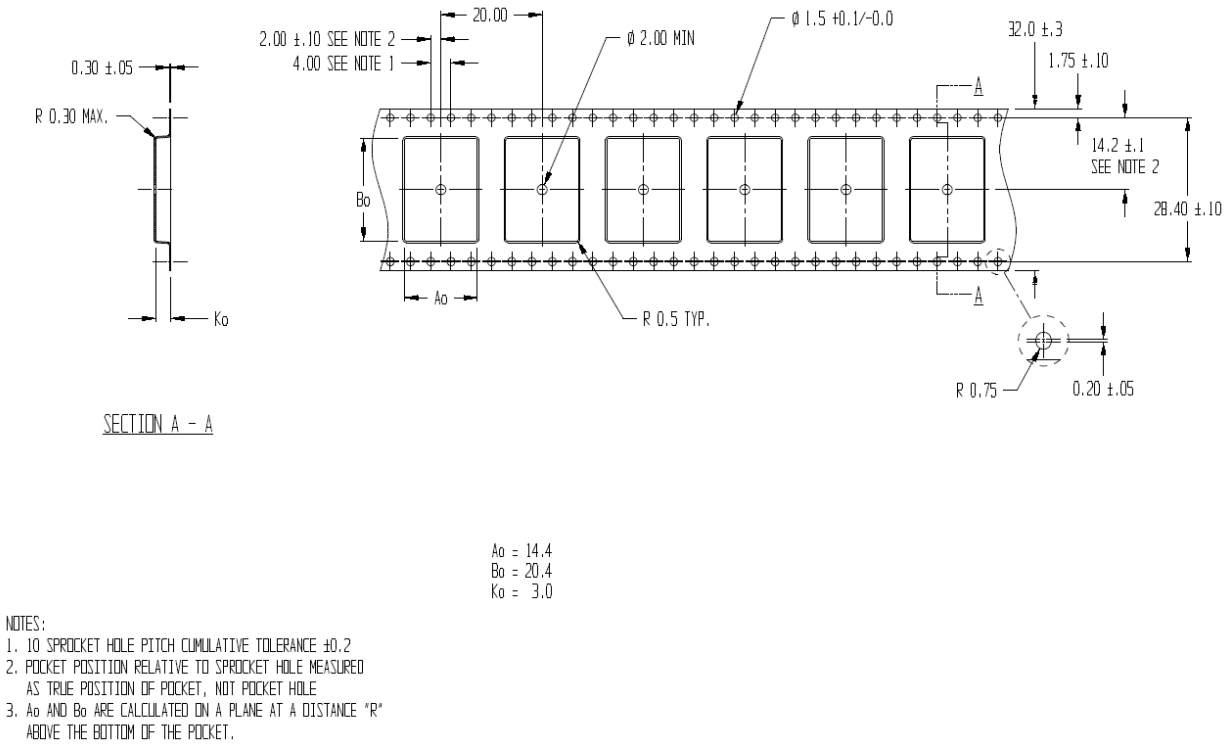

Figure 20: JODY-W1 Tape dimensions

8.2 Shipment, storage and handling

For more information regarding moisture sensitivity levels, shipment, storage and handling, see the u-blox Package Information Guide [1].

8.2.1 Moisture sensitivity levels

⚠ The JODY-W1 series modules are Moisture Sensitive Devices (MSD) in accordance with the IPC/JEDEC specification.

The moisture sensitivity levels (MSL) for JODY-W1 automotive and professional grade modules are 3 and 4 respectively. See moisture sensitive warning label on each shipping bag for detailed information.

After opening the dry pack, the modules with MSL 3 must be mounted within 168 hours in factory conditions of maximum 30 °C/60%RH or must be stored at less than 10%RH. The modules with MSL 4 must be mounted within 72 hours.

The modules require baking if the humidity indicator card shows more than 10% when read at 23±5°C or if the conditions mentioned above are not met. Please refer to J-STD-033B standard for the bake procedure.

8.2.2 Mounting process and soldering recommendations

Reflow profiles are to be selected according to u-blox recommendations. See JODY-W1 series System Integration Manual [2] for more information.

⚠ Failure to observe these recommendations can result in severe damage to the device.

8.2.3 ESD handling precautions

⚠ JODY-W1 series modules are Electrostatic Sensitive Devices (ESD). Observe precautions for handling! Failure to observe these precautions can result in severe damage to the Wi-Fi receiver!

Wi-Fi transceivers are Electrostatic Sensitive Devices (ESD) and require special precautions when handling. Particular care must be exercised when handling patch antennas, due to the risk of electrostatic charges. In addition to standard ESD safety practices, the following measures should be taken into account whenever handling the receiver:

- Unless there is a galvanic coupling between the local GND (i.e. the work table) and the PCB GND, then the first point of contact when handling the PCB must always be between the local GND and PCB GND.
- Before mounting an antenna patch, connect ground of the device
- When handling the RF pin, do not come into contact with any charged capacitors and be careful when contacting materials that can develop charges (e.g. patch antenna ~10 pF, coax cable ~50-80 pF/m, soldering iron, ...)
- To prevent electrostatic discharge through the RF input, do not touch any exposed antenna area. If there is any risk that such exposed antenna area is touched in non ESD protected work area, implement proper ESD protection measures in the design.
- When soldering RF connectors and patch antennas to the receiver's RF pin, make sure to use an ESD safe soldering iron (tip).

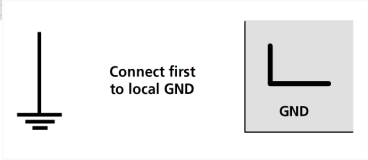

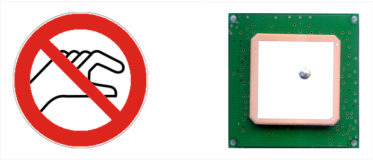

CONFIDENTIAL

9 Labeling and ordering information

9.1 Product labeling

The labels of JODY-W1 series include important product information as described in this section. The data matrix code for automotive and professional grade variants of JODY-W1 series includes a serial number.

Figure 21 illustrates the sample label of the JODY-W1 series and includes: the u-blox logo, product name (model), type number, FCC and IC certification number and date of unit production encoded YY/WW (year/week).

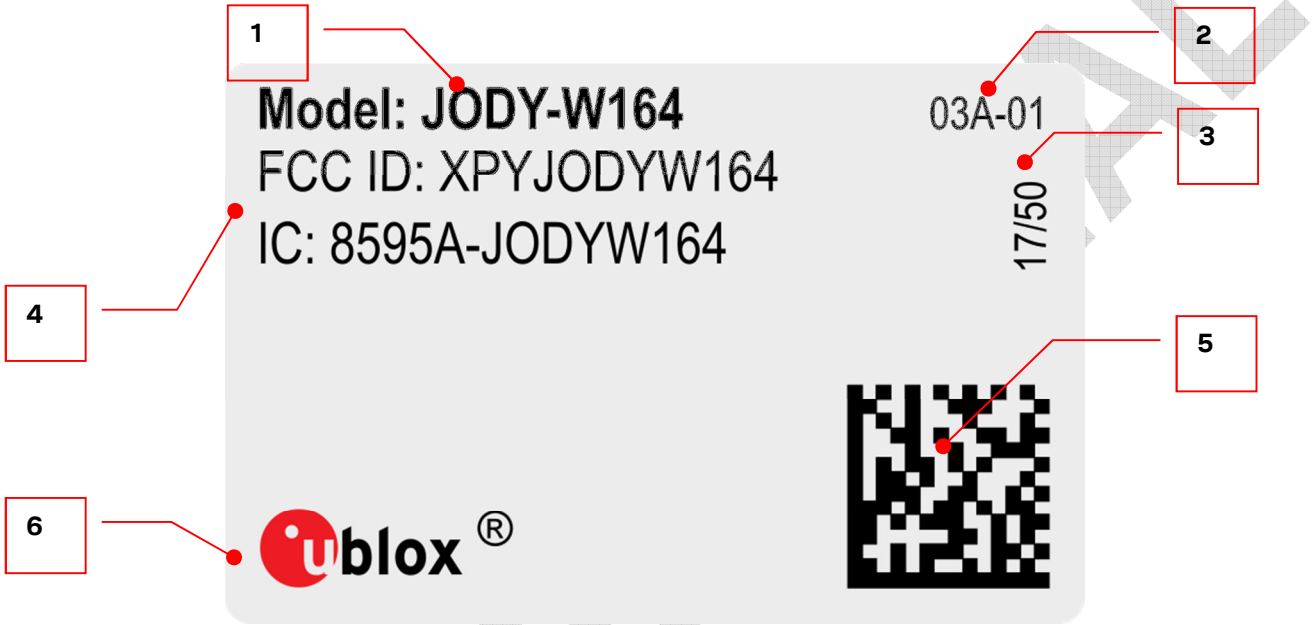

Figure 21: JODY-W1 series sample label

A detailed description of the label components are listed in Table 37.

Reference	Description
1	Text in bold font: “Model:” followed by type number without the product version
2	Product version (“xxB-yy” for professional and “xxA-yy” for automotive grade)
3	Date of production encoded YY/WW (year/week)
4	FCC/ISED ID which the module has been listed with
5	Data Matrix with unique serial number of 19 alphanumeric symbols. The 3 first symbols represent the unique module type no, the next 12 symbols represent the unique hexadecimal Bluetooth MAC address of the module in the format AABBCCDDEEFF, and the last 4 symbols represent the hardware and firmware version encoded HHFF.
6	u-blox logo, the red dot in the logo is also marking pin no 1

Table 37: JODY-W1 series label description

CONFIDENTIAL

The product variant name, which is identical to the ordering code, used for product type approval is shown on the first line of the label. Table 38 provides the mapping of ordering code, label contents and FCC/ISED IDs. The marking "yy" in Reference 2 on the label is the minor product version and not relevant for certification.

Ordering code	Label marking		FCC ID	ISED ID
	Ref. 1 ("Model:" ...)	Ref. 2		
JODY-W163-04A	JODY-W163	04A-yy	XPYJODYW164-07A	8595A-JODYW16407A
JODY-W163-05A	JODY-W163	05A-yy		
JODY-W164-04A	JODY-W164	04A-yy		
JODY-W164-05A	JODY-W164	05A-yy		
JODY-W164-07A	JODY-W164	07A-yy		
JODY-W163-13A	JODY-W163	13A-yy	XPYJODYW164	8595A-JODYW164
JODY-W164-03A	JODY-W164	03A-yy		
JODY-W167-00A	JODY-W167	00A-yy	XPYJODYW167	8595A-JODYW167
JODY-W167-03A	JODY-W167	03A-yy		
JODY-W167-00B	JODY-W167	00B-yy		

Table 38: Mapping of the ordering code, label marking and FCC/ISED IDs

9.2 Explanation of codes

Two different product code formats are used. The **Product Name** is used in documentation such as this data sheet and identifies all u-blox products, independent of packaging and quality grade. The **Ordering Code** includes options and quality, while the **Type Number** includes the hardware and firmware versions. Table 39 explains these three different formats:

Format	Structure
Product Name	PPPP-TGVV
Ordering Code	PPPP-TGVV-TTQ
Type Number	PPPP-TGVV-TTQ-XX

Table 39: Product code formats

Table 40 explains the parts of the product code.

Code	Meaning	Example
PPPP	Form factor	JODY
TG	Platform T – Dominant technology, For example, W: Wi-Fi, B: Bluetooth G - Generation	W1
VV	Variant based on the same platform; range [00…99]	61
TT	Major Product Version	00
Q	Quality grade A: Automotive B: Professional C: Standard	A
XX	Minor product version (not relevant for certification)	00

Table 40: Part identification code

9.3 Ordering codes

CONFIDENTIAL

Ordering Code	Product name	Product
JODY-W163-04A	JODY-W163-A	Automotive grade module based on CYW89359 transceiver, 2-antenna version, RSDB operation on a single antenna. No MIMO support. SDIO host interface.
JODY-W163-05A	JODY-W163-A	Automotive grade module based on CYW88359 transceiver, 2-antenna version, RSDB operation on a single antenna. No MIMO support. SDIO host interface.
JODY-W163-13A	JODY-W163-A	Automotive grade module based on CYW89359 transceiver, 2-antenna version, RSDB operation on a single antenna. Support for 5 GHz MIMO. LTE filter for 2.4 GHz Wi-Fi. SDIO host interface.
JODY-W164-03A	JODY-W164-A	Automotive grade module based on CYW89359 transceiver, 2-antenna version, RSDB operation on a single antenna. Support for 5 GHz MIMO. PCIe host interface.
JODY-W164-04A	JODY-W164-A	Automotive grade module based on CYW89359 transceiver, 2-antenna version, RSDB operation on a single antenna. No MIMO support. PCIe host interface. Components support two additional reflow processes (cf. section 8.2.2). Two reflow soldering processes permitted.
JODY-W164-05A	JODY-W164-A	Automotive grade module based on CYW88359 transceiver, 2-antenna version, RSDB operation on a single antenna. No MIMO support. PCIe host interface.
JODY-W164-07A	JODY-W164-A	Automotive grade module based on CYW88359 transceiver, 2-antenna version, RSDB operation on a single antenna. No MIMO support. LTE filter for 2.4 GHz Wi-Fi. SDIO host interface.
JODY-W167-00A	JODY-W167-A	Automotive grade module based on CYW88359 transceiver, 3-antenna version, 2x2 MIMO. PCIe host interface.
JODY-W167-03A	JODY-W167-A	Automotive grade module based on CYW89359 transceiver, 3-antenna version, 2x2 MIMO. PCIe host interface.
JODY-W167-00B	JODY-W167	Professional grade module based on CYW88359 transceiver, 3-antenna version, 2x2 MIMO. PCIe host interface.

Table 41: Product ordering codes

☞ Product changes affecting form, fit or function are documented by u-blox. For a list of Product Change Notifications (PCNs) see our website.

CONFIDENTIAL

Appendix

A Glossary

Abbreviation	Definition
AC	Alternating Current
BT	Bluetooth
CMD	Command
DC	Direct Current
DDR	Double Data Rate
ESD	Electrostatic Sensitive Devices
FCC	Federal Communications Commission
FIFO	First In, First Out
GI	Guard interval
GND	Ground
GPIO	General-purpose input/output
HD	High Definition
HCI	Host Controller Interface
ISED	Innovation, Science and Economic Development Canada
ISM	Industrial, scientific and medical
LE	Low Energy
LTE	Long Term Evolution
LULA	Limited Use License Agreement
MAC	Medium Access Control
MIMO	Multiple Input Multiple Output
MWS	Mobile Wireless Standards
MSL	Moisture sensitivity level
NFC	Near-Field Communication
OEM	Original equipment manufacturer
P2P	Peer-to-peer
P2P (GC)	P2P Client
P2P (GO)	P2P Group Owner
PCB	Printed Circuit Board
PCI	Peripheral Component Interconnect
PCIe	PCI Express
PCN	Product Change Notification
PCM	Pulse-code modulation
POR	Power-on reset
RED	Radio Equipment Directive
RF	Radio Frequency
RSDB	Real Simultaneous Dual Band
RSS	Radio Standards Specification
RH	Relative humidity
RoHS	Restriction of Hazardous Substances
SAR	Specific Absorption Rate
SCO	Synchronous Connection-Oriented

CONFIDENTIAL

Abbreviation	Definition
SDIO	Secure Digital Input Output
SDR	Single Data Rate
SISO	Single-input single-output
SMD	Surface-mount Device
STA	Station
TBD	To be defined
USB	Universal Serial Bus
UART	Universal Asynchronous Receiver/Transmitter
VSDB	Virtual Simultaneous Dual Band
WAPI	WLAN Authentication and Privacy Infrastructure
WLAN	Wireless Local Area Network

Table 42: Explanation of the abbreviations and terms used

CONFIDENTIAL

Related documents

[1] u-blox Package Information Guide, document number UBX-14001652
[2] JODY-W1 series System Integration Manual, document number UBX-15024929
[3] JODY-W1 antenna reference design, document number UBX-18017767
[4] JODY-W1 reflow mounted upside down, Information Note, document number UBX-18021974
[5] Radio Equipment Directive; ec.europa.eu/growth/sectors/electrical-engineering/red-directive; July 2017

☞ For regular updates to u-blox documentation and to receive product change notifications, register on our homepage (www.u-blox.com).

Revision history

Revision	Date	Name	Comments
R01	11-Jul-2016	vdyk	Initial release.
R02	2-Nov-2016	vdyk, ishe, este, kgom	Removed support for USB interface (section 2.5). Modified the block diagram of JODY-W165 and Pin assignment (Figure 17), and Physical dimensions (Figure 18). Updated the key features (Table 1), module configuration (Table 5), and pin description of JODY-W1 series (Table 19).
R03	29-Nov-2016	mhei, ddie	Updated Figure 16.
R04	2-Mar-2017	ddie, ishe, kgom	Removed reference to JODY-W165 (Professional grade with 2 antenna pins) and included JODY-W167-A (Automotive grade with 3 antenna pins) product variant. Updated Table 1. Included information about supported RSDB and MIMO configurations (section 1.5). Corrected pin names (Figure 16). Removed Reset configuration section. Updated FCC and IC IDs (section 7.3) and ordering codes (section 9.3). Replaced document status with disclosure restriction.
R05	4-May-2017	ddie, ishe, mzes, kgom	Added JODY-W164-A product variant and included block diagram, FCC/IC ID, ordering code for this variant. Updated section 1.1 and Table 1. Included information about Extended operation mode configuration (section 2.1). Updated product description (1.1). Updated Figure 9 and Figure 10. Corrected pin names (Figure 18). Included detailed pin description for antenna pins. Updated Mechanical specification (section 6). Updated FCC and IC IDs (section 7.3) and ordering codes (section 9.3).
R06	08-Sep-2017	mzes, ishe, shoe, ddie	Updated support for 802.11 standards (section 1.7.1). Added information about PCIe pins in Table 21. Included information about RED certification (section 7.2). Added information about JODY-W164-07A. Updated JODY-W164-A block diagram (Figure 1). Added support for RSDB over SDIO.
R07	23-Feb-2018	ddie, mhei, mzes, kgom	Removed the product variant - JODY-W165-A and modified the product status for most of the variants to Engineering Sample in the last table on page 2. Removed support for UART H5 (section 2.4). Updated Pin definition table (Table 22), added Wi-Fi and Bluetooth current consumption specifications (Table 27, Table 28, and Table 29). Included a note with respect to temperature derating in section 4.2. Updated the mechanical specifications (Figure 19). Updated Approvals (section 7.1). Updated the product label drawing in Section 9.1 and corrected the data matrix code content (section 9.1).
R08	5-Mar-2018	mhei, kgom	Updated section 1.1, Table 1 and pin assignment (top view) (Figure 18).
R09	29-Mar-2018	kgom	Updated Table 1. Included footnote related to support of SDIO interface for Automotive grade variants only.
R10	6-Jul-2018	ishe, mzes, ddie, mhei	Updated Table 1, Table 26 and Table 27. Added product variants - JODY-W163-04A, JODY-W163-05A, JODY-W163-13A, and JODY-W167-00B. Removed all references to some of the product variants that have been removed. Updated the product description for JODY-W167(-A).

CONFIDENTIAL

Revision	Date	Name	Comments
			Updated support of a single host interface only (SDIO or PCIe) per product variant. Updated the chipset information. Major updates in Approvals section (standards references, approved antennas, Bluetooth qualification). Added Table 38. Updated the current consumption for Wi-Fi power-save modes (Table 28). Added information on the permitted number of reflow processes for JODY-W164-04A and the reference to the related Information Note [4].
R11	27-Sep-18	mzes	Updated supported Wi-Fi operation modes in section 1.6. Removed soldering profile in section 8.2.2 and provided reference to JODY-W1 System Integration Manual instead. Added new FCC/IC IDs in Table 34 and Table 38. Added Bluetooth QDID in section 7.6.
R12	14-Dec-18	mzes, kgom	Updated the product status for JODY-W163-A and JODY-W164-A to Initial Production. Updated the country certifications (sections 1.7.4 and 7.3.1). Included moisture sensitivity level for professional grade modules (section 8.2.1). Fixed a formatting error in Table 29.
R13	19-Mar-19	lber	Updated Table 1. Added information about LTE band support for LTE coexistence bandpass filter in section 1.5 and LTE Coexistence performance (section 4.7).

CONFIDENTIAL

Contact

For complete contact information, visit us at www.u-blox.com.

u-blox Offices

North, Central and South America

u-blox America, Inc.

Phone: +1 703 483 3180
E-mail: info_us@u-blox.com

Regional Office West Coast:

Phone: +1 408 573 3640
E-mail: info_us@u-blox.com

Technical Support:

Phone: +1 703 483 3185
E-mail: support@u-blox.com

Headquarters
Europe, Middle East, Africa

u-blox AG

Phone: +41 44 722 74 44
E-mail: info@u-blox.com
Supporta: support@u-blox.com

Asia, Australia, Pacific

u-blox Singapore Pte. Ltd.

Phone: +65 6734 3811
E-mail: info_ap@u-blox.com
Support: support_ap@u-blox.com

Regional Office Australia:

Phone: +61 2 8448 2016
E-mail: info_anz@u-blox.com
Support: support_ap@u-blox.com

Regional Office China (Beijing):

Phone: +86 10 68 133 545
E-mail: info_cn@u-blox.com
Support: support_cn@u-blox.com

Regional Office China (Chongqing):

Phone: +86 23 6815 1588
E-mail: info_cn@u-blox.com
Support: support_cn@u-blox.com

Regional Office China (Shanghai):

Phone: +86 21 6090 4832
E-mail: info_cn@u-blox.com
Support: support_cn@u-blox.com

Regional Office China (Shenzhen):

Phone: +86 755 8627 1083
E-mail: info_cn@u-blox.com
Support: support_cn@u-blox.com

Regional Office India:

Phone: +91 80 405 092 00
E-mail: info_in@u-blox.com
Support: support_in@u-blox.com

Regional Office Japan (Osaka):

Phone: +81 6 6941 3660
E-mail: info_jp@u-blox.com
Support: support_jp@u-blox.com

Regional Office Japan (Tokyo):

Phone: +81 3 5775 3850
E-mail: info_jp@u-blox.com
Support: support_jp@u-blox.com

Regional Office Korea:

Phone: +82 2 542 0861
E-mail: info_kr@u-blox.com
Support: support_kr@u-blox.com

Regional Office Taiwan:

Phone: +886 2 2657 1090
E-mail: info_tw@u-blox.com
Support: support_tw@u-blox.com

CONFIDENTIAL