S

MAYA-W4 series

Host-based multiradio modules with Wi-Fi 6, Bluetooth® Low Energy, and IEEE 802.15.4

System integration manual

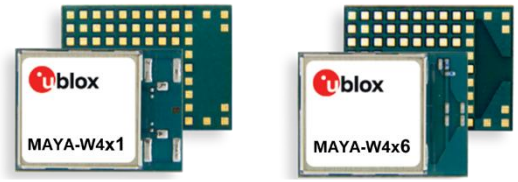

Abstract

Targeted towards hardware and software application engineers, this document describes how to integrate MAYA-W4 modules in application products and explains the hardware design-in, software, component handling, regulatory compliance, and testing of the modules. It also lists the external antennas approved for use with the module. Designed for a wide range of industrial applications, this range of ultra-compact, cost-efficient, host-based, multiradio modules includes product variants that are supplied with or without internal antenna. Integrated with a MAC/Baseband processor and RF front end components, MAYA-W4 modules connect to a host processor through various interfaces, including SDIO or USB for Wi-Fi, High-Speed UART or USB for Bluetooth, and SPI for 802.15.4.

UBXDOC-465451970-3372 - R02
C1-Public

Document information

Title	**MAYA-W4 series**
Subtitle	Host-based multiradio modules with Wi-Fi 6, Bluetooth® Low Energy, and IEEE 802.15.4
Document type	System integration manual
Document number	UBXDOC-465451970-3372
Revision and date	R02 11-Jun-2025
Disclosure restriction	C1-Public

Document status description	
Draft	For functional testing. Revised and supplementary data will be published later.
Objective specification	Target values. Revised and supplementary data will be published later.
Advance information	Data based on early testing. Revised and supplementary data will be published later.
Early production information	Data from product verification. Revised and supplementary data may be published later.
Production information	Document contains the final product specification.

This document applies to the following products:

Product name	**Type number**
MAYA-W433	MAYA-W433-00B-00
MAYA-W436	MAYA-W436-00B-00
MAYA-W442	MAYA-W442-00B-00
MAYA-W463	MAYA-W463-00B-00
MAYA-W466	MAYA-W466-10B-00
MAYA-W466	MAYA-W466-00B-00
MAYA-W471	MAYA-W471-00B-00
MAYA-W472	MAYA-W472-00B-00
MAYA-W473	MAYA-W473-00B-00
MAYA-W476	MAYA-W476-10B-00
MAYA-W476	MAYA-W476-00B-00

☞ For information about the related hardware, software, and status of listed product types, see also the respective data sheets [1].

u-blox or third parties may hold intellectual property rights in the products, names, logos, and designs included in this document. Copying, reproduction, or modification of this document or any part thereof is only permitted with the express written permission of u-blox. Disclosure to third parties is permitted for clearly public documents only.
The information contained herein is provided “as is” and u-blox assumes no liability for its use. No warranty, either express or implied, is given, including but not limited to, with respect to the accuracy, correctness, reliability and fitness for a particular purpose of the information. This document may be revised by u-blox at any time without notice. For the most recent documents and statuses, visit www.u-blox.com.
Copyright © u-blox AG.

Contents

Document information **2**
Contents **4**
1 System description **7**
1.1 Overview 7
1.2 Module architecture 7
2 Module integration **8**
2.1 Power supply interface 9
2.1.1 Digital I/O interfaces reference voltage (VIO) 9
2.2 Antenna interfaces 10
2.2.1 Antenna solutions 10
2.2.2 RF pins and connectors 11
2.2.3 Approved antenna designs 11
2.2.4 Integrated antennas 11
2.2.5 External antennas 12
2.2.6 Internal antennas 12
2.3 Antenna diversity 13
2.4 System function interfaces 14
2.4.1 Power-up sequence 14
2.4.2 Power-down / Reset 15
2.4.3 Power-off sequence 15
2.4.4 Wake-up signals 15
2.4.5 Configuration pins 15
2.4.6 Power states 16
2.5 Host interfaces 16
2.5.1 SDIO 3.0 interface 16
2.5.2 USB 2.0 interface 17
2.5.3 High-speed UART interface 18
2.5.4 SPI interface 18
2.6 External coexistence interface 18
2.7 General purpose I/O 19
2.8 Other remarks 19
2.8.1 Unused pins 19
3 Design-in **20**
3.1 Overview 20
3.2 RF interface 20
3.2.1 Antenna design 21
3.3 Supply interfaces 26
3.3.1 Module supply design 26
3.4 Data communication interfaces 28
3.4.1 SDIO 3.0 interface 28

3.4.2 USB 2.0 interface 29
3.4.3 High-speed UART interface 30
3.5 General high-speed layout guidelines 30
3.5.1 General considerations for schematic design and PCB floor planning 30
3.5.2 Component placement 31
3.5.3 Layout and manufacturing 31
3.6 Module footprint and paste mask 31
3.7 Thermal guidelines 32
3.8 ESD guidelines 33
3.9 Design-in checklists 33
3.9.1 Schematic checklist 33
3.9.2 Layout checklist 34
4 Module migration 35
4.1 Generic considerations 35
4.2 MAYA-W4 migration 36
4.2.1 Data interfaces 36
4.2.2 Configuration pins 36
4.2.3 Wake-up and Reset interface 36
4.2.4 Power-up 37
4.2.5 Power supply 37
4.2.6 RF 37
4.3 Mechanical design 37
4.4 Production and handling 38
5 Software 39
5.1 Available software packages 39
5.1.1 Open-source Linux/Android drivers 39
5.1.2 MCUXpresso SDK 39
5.2 u-blox software deliverables 40
5.2.1 Yocto meta layer 40
5.3 Software architecture 40
5.4 Bringing-up the Linux drivers 41
5.4.1 Wi-Fi driver 42
5.4.2 Bluetooth interface 43
5.4.3 Creating a Thread network using the 802.15.4 radio 45
5.5 Configuring antenna diversity 47
5.6 Usage examples 48
6 Handling and soldering 49
6.1 ESD handling precautions 49
6.2 Packaging, shipping, storage, and moisture preconditioning 49
6.3 Reflow soldering process 50
6.3.1 Cleaning 51
6.3.2 Other notes 51

7 Regulatory compliance ... 52
7.1 General requirements ... 52
7.1 European Union regulatory compliance ... 52
7.1.1 CE End-product regulatory compliance ... 52
7.1.2 CE Equipment classes ... 53
7.2 Great Britain regulatory compliance ... 53
7.2.1 UK Conformity Assessed (UKCA) ... 53
7.3 United states/Canada End-product regulatory compliance ... 53
7.3.1 United States compliance statement (FCC) ... 54
7.3.2 Canada compliance statement (ISED) ... 55
7.3.3 Referring to the u-blox FCC/ISED certification ID ... 57
7.3.4 Obtaining own FCC/ISED certification ID ... 57
7.3.5 Antenna requirements ... 58
7.3.6 Configuration control and software security of end-products ... 58
7.3.7 Operating frequencies ... 59
7.3.8 End product labeling requirements ... 60
7.4 Japan radio equipment compliance ... 63
7.4.1 Compliance statement ... 63
7.4.2 End product labelling requirement ... 63
7.5 Approved antennas ... 64
8 Product testing ... 65
8.1 u-blox in-line production testing ... 65
8.2 OEM manufacturer production test ... 66
8.3 Radio testing ... 66
Appendix ... 67
A Wi-Fi transmit output power limits (pending) ... 67
B Glossary ... 67
Related documents ... 69
Revision history ... 70
Contact ... 70

1 System description

1.1 Overview

Comprising ultra-compact, multiradio modules with Wi-Fi 6, Bluetooth® Low Energy, and IEEE 802.15.4 connectivity, the MAYA-W4 series supports IEEE 802.11a/b/g/n/ac/ax standards and delivers PHY data rates up to 115 Mbit/s with 1x1 dual band 2.4 / 5 GHz Wi-Fi with 20 MHz channel bandwidth. The modules can work as simple access points, stations, in P2P connections, or in a combination of these modes.

MAYA-W4 series supports Bluetooth® Low Energy (LE), including 2 Mbit/s high-speed data rate, long range, extended advertising, and isochronous channels for LE audio. MAYA-W4 series variants include an 802.15.4 radio supporting the Thread mesh network protocol for Matter applications running over Wi-Fi and Thread.

MAYA-W4 supports an optional LTE filter and is available with or without an antenna, including variants with U.FL connectors, antenna pins, or an on-board antenna. MAYA-W4 modules come with RF calibration and MAC addresses available in the integrated OTP memory.

The modules are developed for reliable, high-demanding, industrial devices and applications that demand high performance.

1.2 Module architecture

MAYA-W4 includes the NXP IW610x System-On-Chip (SoC) with fully integrated power management circuitry that provides power to the internal voltage domains of the SoC, integrated MAC/baseband processor, transceivers for 2.4 GHz and 5 GHz Wi-Fi operation, Bluetooth LE connectivity, and 802.15.4 Thread support.

MAYA-W4 also includes discrete RF components for configuring the antenna interface enabling the antenna path connections as shown in the block diagrams in [1].

For host CPU connectivity, MAYA-W4 supports a Secure Digital Input Output (SDIO) 3.0 interface for Wi-Fi and a Universal Asynchronous Receiver Transmitter (UART) interface for Bluetooth LE. Wi-Fi and Bluetooth LE communication are also supported through a USB 2.0 device interface. A Serial Peripheral Interface (SPI) is available for 802.15.4 Thread operation. The host interface configuration is selected through Configuration pins.

All module variants support:

- Integrated discrete filters in the 2.4 GHz band and 5 GHz band
- Optional LTE filter for improved coexistence with LTE bands 7, 38, 40, 41
- External coexistence interfaces to enable coexistence with other co-located wireless devices

The MAYA-W4 series includes variants with single or dual-band Wi-Fi 6, Bluetooth LE, and optional 802.15.4 radio. It also offers multiple antenna solutions:

- Single embedded antenna, antenna pin, or U.FL connector for shared 2.4 GHz Wi-Fi and Bluetooth LE/802.15.4 operation
- Dual antenna pins for simultaneous 2.4 GHz Wi-Fi and Bluetooth LE/802.15.4 operation

See the MAYA-W4 data sheet [1] for the available MAYA-W4 module variants.

2 Module integration

MAYA-W4 shall be integrated into the application product together with a Host CPU system. Figure 1 shows a typical integration.

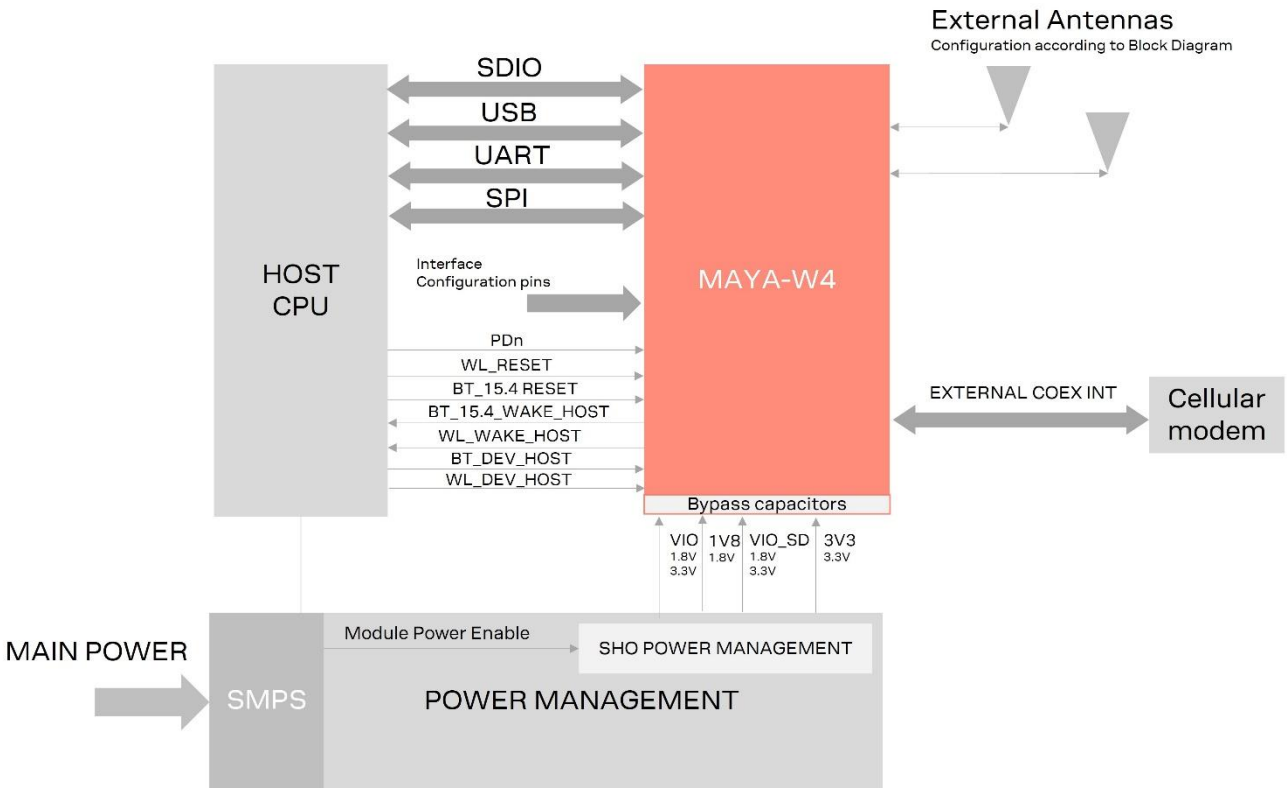

Figure 1. MAYA-W4 integration in host system

- The SDIO or USB provide the main interface for Wi-Fi data and downloading firmware. The UART or USB interface is used for Bluetooth data. SPI is used for 802.15.4.
- The preferred data and communication interface between Host CPU and MAYA-W4 is set according to the instructions for Configuration pins.
- Host interface signals for power down, reset, host and module wake-up are available to control MAYA-W4 from host CPU.
- The module is power supplied through the **3V3**, **1V8**, **VIO**, and **VIO_SD** domain pins. To match the host CPU pad voltage, **VIO** can be set to either 1.8 V or 3.3 V. **VIO_SD** can be set to 1.8 V or 3.3 V to match the SDIO interface voltage of the Host CPU.
- MAYA-W4 antenna configurations, including antenna pin(s), U.FL connector(s), or internal antenna, are described in [1].
- For correct operation, it is important to correctly configure MAYA-W4 with the settings and start-up sequences described in the MAYA-W4 data sheet [1]. This configuration requires that **PDn** is asserted and that the timing of power sources is enabled. This configuration places requirements on enabling the timing of power sources and the assertion of PDn.
- The MAYA-W4 product summary [23] describes the features of the different MAYA-W4 versions. Use this document to identify the MAYA module that is best suited for your application product.

2.1 Power supply interface

MAYA-W4 series power supply pins **3V3, 3V3_USB, 1V8, VIO,** and **VIO_SD** pins must be sourced by a regulated DC power supply, such as an LDO or SMPS. The appropriate type for your design depends on the main power source of the application.

The DC power supply can be taken from any of the following sources:

- Switched Mode Power Supply (SMPS)
- Low Drop Out (LDO) regulator

When choosing between an SMPS or LDO to supply the modules, it is advisable to consider the acceptable power and thermal dissipation of the application product. See also Module supply design.

The power supply design must strictly adhere to the defined power-up sequence. Ensuring compliance with the recommended power-up sequence is critical when implementing power management functions.

The current consumed through the supply pins on MAYA-W4 series modules can vary by several orders of magnitude depending on the operation mode and state. The current consumption can change from high consumption, experienced during Wi-Fi transmission at maximum RF power level in connected-mode, to low current consumption during the low power idle-mode when power saving is enabled. Regardless of the chosen DC power supply, it is crucial that it can satisfy the high peak current consumed by the module. When designing the supply circuitry for the module, a contingency of at least 20% over the stated maximum current in [1] is recommended. See also Module supply design.

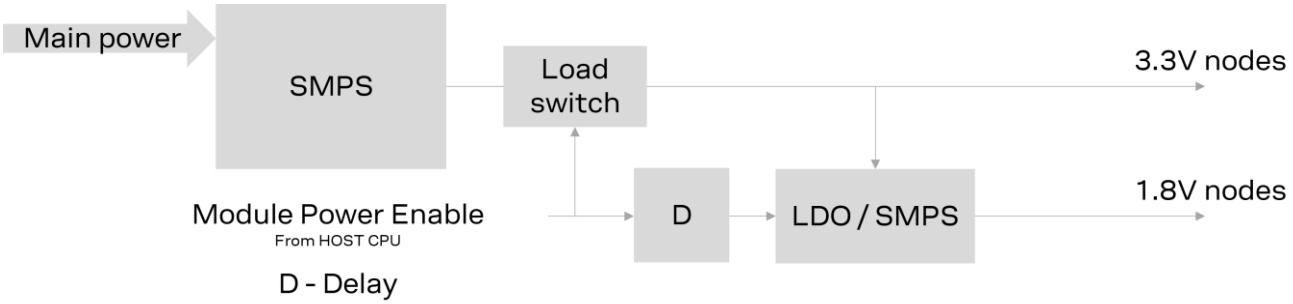

Figure 2: Proposed implementation of MAYA-W4 power supply circuitry

2.1.1 Digital I/O interfaces reference voltage (VIO)

The dedicated **VIO** pin enables integration of MAYA-W4 in either 1.8 V or 3.3 V applications without the need for level converters according to the voltage level selected.

For information about the supply voltage requirements, see also the MAYA-W4 series data sheet [1].

2.2 Antenna interfaces

Different antenna solutions can be used to integrate MAYA-W4 modules into application designs.

2.2.1 Antenna solutions

Figure 3 shows the available antenna options.

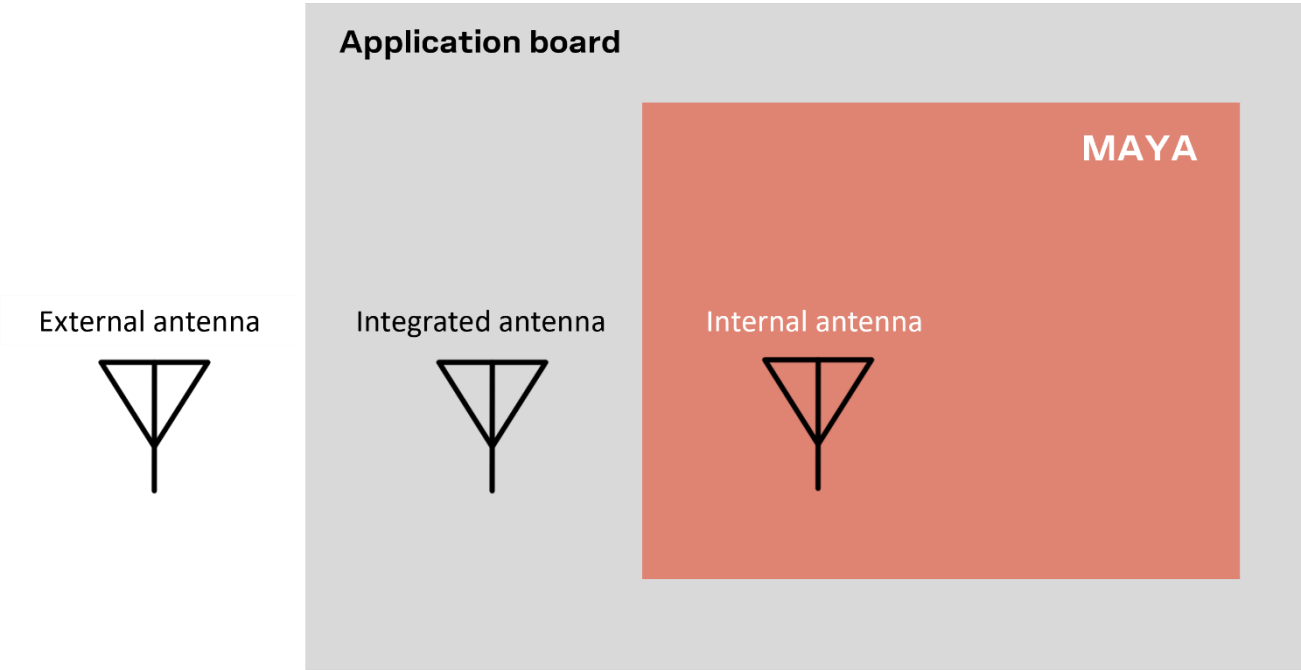

Figure 3: Antenna options

- External antenna: An external antenna of choice connected through a coaxial cable to a U.FL connector placed on the module or Reverse Polarity SMA connector placed on the application PCB and connected to the module antenna pin.
- Integrated antenna: A permanent antenna included in the PCB application design. Ideally an SMD antenna mounted on the application PCB, or a Flexible PCB antenna attached to the housing of the application product.
- Internal antenna: A Niche antenna, licensed from Abracon and integrated onto the module's PCB, designed for a minimum BOM.

2.2.2 RF pins and connectors

The MAYA-W4 series supports multiple single- and dual-antenna configurations:

- Single internal antenna or antenna pin – configured externally by a 0 Ω jumper
- Single external antenna connected through antenna pin or on-module U.FL connector
- Two external antennas connected through antenna pins

To prevent mutual interference and improve coexistence performance with LTE bands, MAYA-W4 supports an optionally integrated, high-performance 2.4 GHz SAW LTE band pass filter.

Table 1 shows the available antenna interfaces on MAYA-W4 series modules.

Product variant	Antenna interface	Description[1]
MAYA-W4x1	RF_ANT0	Antenna pin for external 2.4/5 GHz Wi-Fi antenna
	RF_ANT1	Antenna pin for external Bluetooth LE/802.15.4 antenna
MAYA-W4x2	U.FL	U.FL connector for external 2.4/5 GHz Wi-Fi, Bluetooth LE, and 802.15.4 antenna. Bluetooth LE, 802.15.4, and 2.4 GHz Wi-Fi are time-shared.
MAYA-W4x3	RF_ANT1	Antenna pin for external 2.4/5 GHz Wi-Fi, Bluetooth LE, and 802.15.4 antenna. Bluetooth LE, 802.15.4, and 2.4 GHz Wi-Fi are time-shared.
MAYA-W4x6	RF_ANT1	Antenna pin for external 2.4/5 GHz Wi-Fi, Bluetooth LE, and 802.15.4 antenna. Bluetooth LE, 802.15.4, and 2.4 GHz Wi-Fi are time-shared.
	ANT_FEED	External antenna feed pin from RF_ANT1 for Internal PCB trace antenna.

Table 1: MAYA-W4 antenna configurations

⚠ For proper implementation of antennas in the application product, follow the RF interface options. See also the Antenna integration application note [11].

2.2.3 Approved antenna designs

MAYA-W4 modules come with a pre-certified antenna design that can save cost and time during the certification process. To leverage this benefit, customers are required to implement an antenna layout that is fully compliant with the u-blox reference design outlined in the MAYA-W4 antenna reference design application note [17]. Reference design source files are available on request[2] from u-blox.

MAYA-W4 modules have been tested and approved for use with the antennas featured in the list of Approved antennas.

⚠ To implement a design compliant with the u-blox FCC certification Grant follow the instructions in the MAYA-W4 antenna reference design application note [17].

2.2.4 Integrated antennas

MAYA-W4 module variants with RF pins allow an SMD antenna to be mounted on the application board, which can then be connected with a transmission line. The module variants suitable for use with an integrated antenna are described in Antenna solutions.

For proper implementation of the antennas in the application product, follow the RF interface options.

[1] Support for 5 GHz Wi-Fi and 802.15.4 depends on the specific product variant.
[2] Reference designs are only available after certification

2.2.5 External antennas

External antennas can be used with MAYA-W4 module variants equipped with U.FL connectors. The antennas connect to the module through coaxial cables. The module variants suitable for use with an external antenna are described in Antenna solutions.

External antennas are particularly suited for application products housed in metal casings that demand that the antennas are placed externally.

For proper implementation of the antennas in the application product, follow the RF interface options.

⚠ To avoid invalidating the compliance and pre-certification of u-blox modules with the various regulatory bodies, use only external antennas included the list of Approved antennas. u-blox modules may also be integrated with other antennas. In which case, OEM installers must certify their own designs with the respective regulatory agencies.

2.2.6 Internal antennas

MAYA-W4x6 modules include an internal Niche antenna that is printed on the PCB and connected to pin L9 (**ANT_FEED**). To use the internal antenna, pin L9 must be connected to the RF signal pin K9 (**RF_ANT1**). The antenna utilizes antenna technology from Abracon. The variants equipped with an internal antenna are described in Antenna solutions.

For proper antenna performance observe the following design considerations. When using these modules with an external antenna this shall be connected to pin K9.

- To enable good antenna radiation performance, it is important to place the module on the edge of the main PCB with the antenna facing outwards.
- A ground plane extending at least 10 mm on both sides of the module is recommended.
- Include a non-disruptive GND plane underneath the module with a clearance, cut out, underneath the antenna, as shown in Figure 4.
- Observe the antenna clearance shall be implemented on all layers.
- To avoid degradation of the antenna characteristics, do not place physically tall or large components closer than 10 mm to the module antenna.
- To avoid any adverse impact on antenna performance, include a 5 mm clearance between the antenna and the casing. Polycarbonate (PC) and Acrylonitrile butadiene styrene (ABS) materials have less impact on antenna performance than other types of thermoplastic.
- Include plenty of stitching vias from the module ground pins to the GND plane layer. Ensure that the impedance between the module pins and ground reference is minimal.
- Consider the end products use case and assembly to make sure that the antenna is not obstructed by any external item.

Figure 4 shows the PCB artwork on main PCB top layer for MAYA-W4x6 modules. It also shows the placement and GND clearance of the internal PCB trace antenna. The antenna clearance is only required for these module variants.

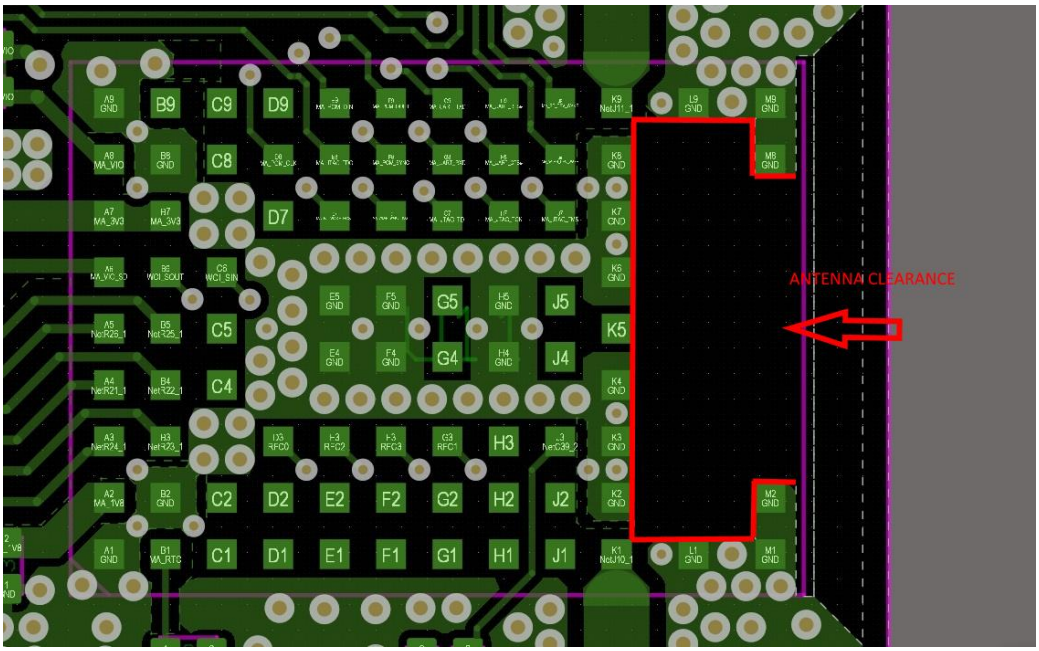

Figure 4: PCB artwork on main PCB top layer for MAYA-W466 and MAYA-W476

2.3 Antenna diversity

For module variants with antenna pins, you can implement Wi-Fi antenna diversity by adding an external antenna switch. The antenna diversity algorithm controls the switch using the RF control pin **RF_CNTL3**.

To configure antenna diversity:

- On MAYA-W4 modules with dual antenna pins, connect the external antenna diversity switch to the Wi-Fi **RF_ANT0** pin.
- On MAYA-W4 modules with a single antenna pin, connect the external diversity antenna switch to the shared **RF_ANT1** pin. For these modules, both Wi-Fi and Bluetooth/802.15.4 are included in the diversity switching.
- Modules with an internal antenna can use it as a diversity antenna.

Antenna switching diversity is only supported in Wi-Fi *station* mode. The antenna diversity algorithm is triggered periodically by evaluating the link quality. If the link quality is unchanged the algorithm keeps the current antenna until the next evaluation. This mainly addresses multipath fading when the conditions change slowly and make fixed installations less critical for optimum placement.

For optimal efficiency, diversity antennas should be separated by at least ¼ wavelength, ideally ½ wavelength, to minimize mutual coupling and interference. To further reduce antenna correlation, implementing orthogonal polarization – where antennas are oriented with perpendicular polarization axes – is highly beneficial. This configuration improves signal independence, enhances performance in multipath environments, and maximizes diversity gains.

The Infineon BGS12WN6 is an example of a single-pin, external antenna switch with an operating frequency of up to 9 GHz. A typical circuit implementation for antenna diversity is shown in Figure 5. For RF diversity, connect the switch to the Wi-Fi antenna pin, **RF_ANT0** or **RF_ANT1**.

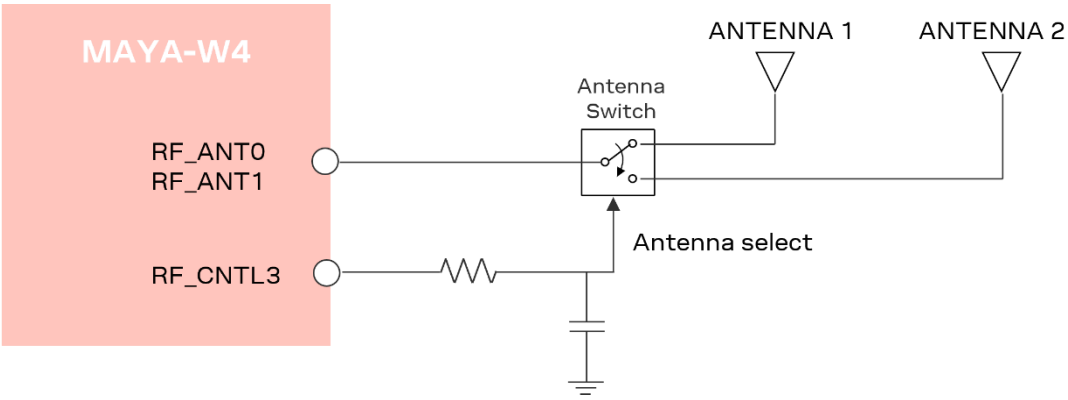

Figure 5: RF diversity switch implementation

For information on how to configure and enable/disable the software antenna diversity feature, see Configuring antenna diversity.

2.4 System function interfaces

2.4.1 Power-up sequence

PDn must be held low during start up and released when the power is stable, or later when the module is powered on. Other than this, there are no additional requirements for the power-up sequence. The external power rails can be applied in any order – provided that **PDn** remains low.

Figure 6 shows the power-up sequence for MAYA-W4, where all power rails can be independently applied before **PDn** is set high.

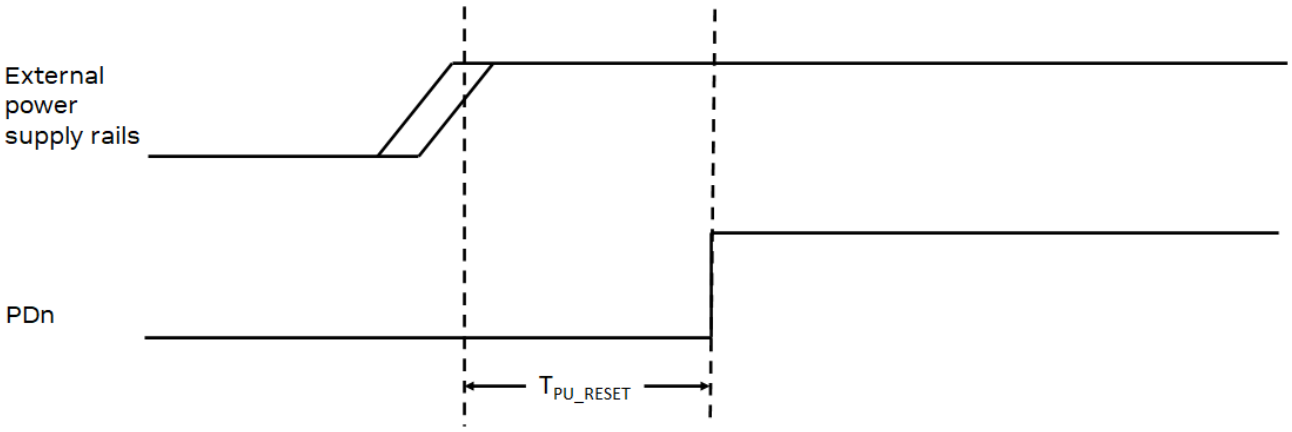

Figure 6: Power sequence of MAYA-W4 module

PDn is powered by the **3V3** voltage domain and is connected through a 51 kΩ pull-up resistor to **3V3** inside the module.

Optionally, the **PDn** pin can be left unconnected so that it follows **3V3** through the pull-up resistor. In which case, the power down mode is not accessible and a further full-power cycle must be made to reset the module.

2.4.2 Power-down / Reset

The module enters power-down mode when **PDn** is asserted (low) while all power supplies to the module are enabled. After **PDn** is deasserted (high), the module is reset and takes approximately 20 ms to get ready for SDIO enumeration.

MAYA-W4 series modules are reset to a default operating state by any of the following events:

- Power on: Module is powered on and internal voltages are good.
- **PDn** assert: The device is reset when the **PDn** input pin is < 0.2 V (V_{IL}) and transitions from low to high. For correct reset, **PDn** must be asserted for a minimum of 1 µs.

☞ A firmware download to the module is required after each reset. For information about downloading the firmware, see also Software.

☞ Optional independent software reset of the Wi-Fi and narrowband (Bluetooth LE/802.15.4) radio subsystems is possible through the **IND_RST_WL** and **IND_RST_NB** pins, respectively. The pins can be left open if they are not needed.

2.4.3 Power-off sequence

MAYA-W4 modules enter power-down mode when **PDn** is asserted. After assertion, the power on the **3V3**, **3V3_USB**, **1V8**, **VIO**, and **VIO_SD** supplies can be removed. The module then enters power-off mode.

2.4.4 Wake-up signals

MAYA-W4 series modules provide wake-up input and output signals that handle the low-power modes for both Wi-Fi and narrowband radios. See also Power states.

The wake-up signals are used to exit MAYA-W4 or host CPU from sleep modes. These signals are optional. Wake-up signals are powered by the **VIO** voltage domain. **WL_WAKE_IN** and **NB_WAKE_IN** are optional, out-of-band, wake-up pins that are used to wake up the radios from sleep mode.

Table 2 describes the various wake-up, input and output signals.

Pin name	I/O type	Description	GPIO pin muxing
WL_WAKE_OUT	O	Wi-Fi radio wake-up output signal	GPIO[4]
WL_WAKE_IN	I	Wi-Fi radio wake-up input signal	GPIO[16]
NB_WAKE_OUT	O	Bluetooth LE/802.15.4 radio wake-up output signal	GPIO[5]
NB_WAKE_IN	I	Bluetooth LE/802.15.4 radio wake-up input signal	GPIO[17]
SPI_INT	O	SPI interrupt output signal	-
SD_INT	O	Optional SDIO interrupt output signal	GPIO[1]

Table 2: Wake-up signal definitions

2.4.5 Configuration pins

MAYA-W4 series modules have configuration pins to set specific interface configuration following a reset. The function of these configuration pins changes immediately (~1 ms) to their initial function after reset, as shown in Table 3.

Configuration pins CON[2:0] are used to set the firmware boot options that subsequently select the interfaces for the Wi-Fi, Bluetooth, and 802.15.4 traffic. Strap CON[2:0] to GND through a 51 kΩ pull-down resistor to set these configuration bits to “0”, as described in Table 3. No external circuitry is required to set configuration bits to “1”, except on CON[2].

During boot-up, configuration pins CON[3,5] must be set according to the settings described in Table 3. No external circuitry is required to set the configuration, which means that these pins can be left unconnected (NC). If these pins are connected, make sure that signals CON[3,5] are not pulled low by any external circuitry during boot-up. After boot, CON[3,5] revert to their main function.

Configuration bits	Pin name	Pin number	Configuration settings
CON[3]	SPI_INT/CON[3]	D2	Reserved. Set to 1 or leave open.
CON[5]	RF_CNTL0	H3	Must be set to 1 or leave open.

	Firmware boot options					
CON[2:0]	CON[2:0]	CON[2]: G4 CON[1]: E3 CON[0]: D3	**Strap value**	**Wi-Fi**	**Bluetooth**	**802.15.4**
			011 (default)	SDIO	UART	SPI
			101	USB	USB	SPI
			Others	Reserved	Reserved	Reserved

Table 3: Configuration pins

2.4.6 Power states

MAYA-W4 series modules have several operation states. The power states and general guidelines for Wi-Fi and Bluetooth operations are defined in Table 4.

General status	Power state	Description
Power down	Power-off	Power supplies are not present or are below the operating range. The module is switched off.
	Power-down	Asserting **PDn** while power supplies are present powers down the module. This represents the lowest leakage mode of operation with active voltage rails. Register and memory states are not maintained in power-down mode. The module is automatically reset after exiting power-down mode, which means that the firmware must be downloaded again. If firmware is not downloaded, the device must be kept in its power-down state to reduce the leakage.
Normal operation	Active	Enables TX/RX data connection with the system running at the specified power consumption.
	Deep sleep	Low-power state used in the sleep state of many power-save modes. Memory is placed in low-power retention mode.

Table 4: Description of module power states

2.5 Host interfaces

MAYA-W4 series modules support SDIO 3.0, USB 2.0, high-speed UART, and SPI host interfaces. Commands and data for Wi-Fi traffic are transferred through the SDIO or USB interface. Bluetooth uses the high-speed UART or USB interface, and the SPI interface is used for the 802.15.4 radio. Interfaces are selected by setting the appropriate boot option. For information about the configuration options for the host interface, see also Configuration pins.

2.5.1 SDIO 3.0 interface

MAYA-W4 series modules include an industry-standard SDIO 3.0 device interface with a clock range of up to 208 MHz. The host controller uses the SDIO bus protocol to access the Wi-Fi function. The interface supports 4-bit SDIO transfer mode with data rates up to 104 MB/s in SDR104 mode. The modules also support the Default Speed (DS) and High-Speed (HS) modes.

☞ The SDIO interface voltage is set by **VIO_SD** to either 1.8 V or 3.3 V.

Table 5 summarizes the supported bus speed modes.

Bus speed mode	Max. bus speed [MB/s]	Max. clock frequency [MHz]	VIO_SD / Signal voltage [V]
SDR104	104	208	1.8
SDR50	50	100	1.8
DDR50	50	50	1.8
SDR25	25	50	1.8
SDR12	12.5	25	1.8
HS: High-Speed	25	50	3.3
DS: Default Speed	12.5	25	3.3

Table 5: SDIO bus speeds

MAYA includes internal 100 kΩ (typical value) pull-up resistors on the SDIO signals. Nevertheless, it is advisable to connect pull-up resistors to these lines. See also Data communication interfaces. Small value in-series termination resistors might also be applied to mitigate signal integrity and EMI issues.

Table 6 describes the function of each of the SDIO signals.

Name	I/O	Description	Remarks
SD_CLK	I	SDIO clock input	
SD_CMD	I/O	SDIO command line	External PU required
SD_DAT[3:0]	I/O	SDIO data lines [3:0]	External PU required
SD_INT	O	SDIO interrupt output (optional)	Multiplexed with GPIO[1]

Table 6: SDIO signal definitions

SDIO interface pins are powered by the **VIO_SD** voltage domain.

2.5.2 USB 2.0 interface

MAYA-W4 includes a Hi-Speed USB 2.0 device interface with a transfer rate of 480 Mb/s that can be used for Wi-Fi and Bluetooth LE. Table 7 describes the USB interface signals.

Name	I/O	Description	Remarks
USB_DP	I/O	USB 2.0 Serial data +	Differential data
USB_DM	I/O	USB 2.0 Serial data -	Differential data
USB_VBUS_ON	I	USB voltage indicator (input)	

Table 7: USB signal definitions

The USB interface pins are powered by the **3V3_USB** voltage domain.

☞ When MAYA-W4 is in power down mode (**PDn** pin asserted low) and **3V3_USB** is supplied, a USB current leakage of ~300 uA occurs, but no functional or stress issue. A load switch controlled by **PDn** on **3V3_USB** can be implemented to reduce leakage current when the module is kept in power down mode for extended periods of time. The load switch shall be in OFF state when **PDn** is asserted low. Use a dedicated load switch IC or implement with discrete components.

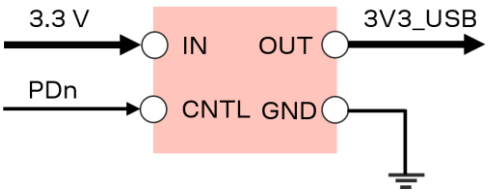

Figure 7: Load switch implementation using a dedicated IC

2.5.3 High-speed UART interface

MAYA-W4 series modules support a high-speed Universal Asynchronous Receiver/Transmitter (UART) interface with baud rates up to 3 Mbps. The default baud rate after reset is 115.2 Kbps.

The UART interface operation includes:

- Bluetooth firmware download to the module
- Bluetooth data (HCI UART transport layer)

High-Speed UART signals are powered by the **VIO** voltage domain.

Table 8 describes the function of each of the UART signals

Name	I/O	Description	Name
UART_TX	O	UART serial output signal, connect to Host RX	GPIO[15]
UART_RX	I	UART serial input signal, connect to Host TX	GPIO[14]
UART_RTS	O	UART request-to-send output signal (active low), connect to Host CTS	GPIO[13]
UART_CTS	I	UART clear-to-send input signal (active low), connect to Host RTS	GPIO[12]

Table 8: UART signal descriptions

2.5.4 SPI interface

MAYA-W4 variants with 802.15.4 radio support an SPI host interface with a maximum clock speed of 10 MHz. The pins are shared with the external PTA coexistence interface.

Table 9 describes the module pins on the SPI interface.

Pin name	I/O type	Description	GPIO pin multiplexing
SPI_FRM	I	SPI frame input signal (active low chip select)	GPIO[8]
SPI_CLK	I	SPI clock input signal	GPIO[9]
SPI_RX	I	SPI receive input signal	GPIO[7]
SPI_TX	O	SPI transmit output signal	GPIO[6]
SPI_INT	O	SPI Interrupt output signal	-

Table 9: 802.15.4 SPI interface description

2.6 External coexistence interface

For optimal performance when sharing the wireless medium, external coexistence interfaces enable signaling between the internal radios and external co-located wireless devices. External radios can be connected to the 5-wire packet traffic arbitration interface (PTA) or the 2-wire wireless coexistence interface 2 (WCI-2). The WCI-2 message, and the message type, comply with Bluetooth special interest group (SIG) core specification volume 7, part C.

Table 12 describes the function of each of the external coexistence signals.

Pin name	I/O type	Description	GPIO pin multiplexing
EXT_STATE	I	External radio state input signal (optional) External radio traffic direction (Tx/Rx): • 1: Tx • 0: Rx	GPIO[22]
EXT_GNT	O	External radio grant output signal (mandatory)	GPIO[20]
EXT_FREQ	I	External radio frequency input signal (optional) Frequency overlap between external radio and Wi-Fi: • 1: overlap • 0: non-overlap This signal is useful when the external radio is a frequency hopping device.	GPIO[18]
EXT_PRI	I	External radio input priority signal (optional) Priority of the request from the external radio. Can support 1 bit priority (sample once) and 2-bit priority (sample twice). Can also have Tx/Rx info following the priority info if EXT_STATE is not used.	GPIO[21]
EXT_REQ	I	Request from the external radio (mandatory)	GPIO[19]
WCI-2_SIN	I	WCI-2 serial interface input	GPIO[22]
WCI-2_SOUT	O	WCI-2 serial interface output	GPIO[18]

Table 10**: External coexistence interface description**

2.7 General purpose I/O

MAYA-W4 provides several GPIO pins, which default to a high-impedance tristate on power-up and reset. Some GPIO pins are multi-functional and are configured according to their intended purpose after initialization and firmware download. For detailed pin assignment information, see also the MAYA-W4 series data sheet [1].

For information describing the function of available GPIO signals in each supported interface, see also UART, SPI, and External coexistence interface. All other GPIO signals are described in the *Pin assignment* section of the MAYA-W4 series data sheet [1].

2.8 Other remarks

2.8.1 Unused pins

MAYA-W4 series modules have unconnected (NC) pins that are reserved for future use. These pins can be left unconnected on the application board.

3 Design-in

Follow the design guidelines in this chapter to optimize the integration of MAYA-W4 series modules in the final application board.

3.1 Overview

Although all application circuits must be properly designed, the following aspects of the application design require special attention:

- Module antenna integration: **RF_ANT**
  - Antennas and RF circuits affect RF performance and certification compliance. It is important to follow the design instructions given here to achieve the performance specified in the MAYA-W4 data sheet. To maintain compliance and subsequent certification of the application design, it is important to observe the applicable parts of antenna schematic and layout described in Antenna design.
- Module power supply: **Power** and **GND**
  - Power supply circuits might affect the products operating stability and RF performance. It is important to select a suitable device capable to source the adequate current. It is also important to implement adequate power and ground planes in PCB stack-up and to implement bypass capacitors for these supplies. See also Supply interfaces.
- High-speed interfaces, such as **PCIe, SDIO**, **USB**, high-speed **UART**, **SPI**, and **PCM**
  - High-speed interfaces are a potential source of noise that can affect the regulatory compliance of standards for radiated emissions. It is important to follow the schematic and layout design recommendations described in SDIO 3.0 interface, USB 2.0 interface, and the General high-speed layout guidelines.
- System functions: **Power Down, Reset,** and Configuration
  - Careful utilization of these pins in the application design is necessary to ensure correct operation of the product. Specifically, check that the state and voltage level of these pins are correctly defined during module boot and operation. It is important to follow the pin design described in the General high-speed layout guidelines.
- Other pins: specific signals
  - Careful utilization of these pins is necessary to ensure that the module operates correctly. It is important to follow the schematic and design layout recommendations.
- **NC** pins must not be connected.

3.2 RF interface

MAYA-W4 modules provide several RF-interface options for connecting external antennas, as described in RF pins and connectors.

⚠ According to FCC regulations, the transmission line from the module antenna pin to the physical antenna (or antenna connector on the host PCB) is considered part of the approved antenna design. Therefore, module integrators must use exactly the antenna reference design used in the module FCC type approval or certify their own design.

For instructions on how to design circuits that comply with these requirements, see also Antenna interfaces.

3.2.1 Antenna design

To optimize the radiated performance of the final product, the selection and placement of both the module and antenna must be chosen with due regard to the mechanical structure and electrical design of the product. To avoid costly redesigns and their potential impact on the mechanical design, it is important to determine the positioning of these components early in the product design phase.

The compliance and subsequent certification of the RF design depends heavily on the radiating performance of the antennas. To ensure that the RF certification of MAYA-W4 modules is extended through to the application design, carefully follow these guidelines:

- External antennas, including, linear monopole classes:
  - Place the module and antenna in any convenient area on the board. External antennas do not impose any restriction on where the module is placed on the PCB.
  - Select antennas with an optimal radiating performance in the operating bands. The radiation performance depends mainly on the antennas.
  - Choose RF cables that offer minimum insertion loss. Unnecessary insertion loss is introduced by low quality or long cables. Large insertion losses reduce radiation performance.
  - Use a high-quality 50 Ω coaxial connector for proper PCB-to-RF cable transition.
- Integrated antennas, such as patch-like antennas:
  - Internal integrated antennas impose some physical restrictions on the PCB design. The orientation of the ground plane relative to the antenna element must also be considered:
    - Integrated antennas excite RF currents on its counterpoise, typically the PCB ground plane of the device that becomes part of the antenna; its dimension defines the minimum frequency that can be radiated. Therefore, the ground plane can be reduced to a minimum size that should be similar to the quarter of the wavelength of the minimum frequency that has to be radiated.
    - Find a numerical example to estimate the physical restrictions on a PCB, where:
      Frequency = 2.4 GHz → Wavelength = 12.5 cm → Quarter wavelength =
      3.5 cm in free space or 1.5 cm on a FR4 substrate PCB.
- Choose antennas with optimal radiating performance in the operating bands. Radiation performance depends on the complete product and antenna system design, including the mechanical design and usage of the product. Table 11 summarizes the requirements for the antenna RF interface.
- Make the RF isolation between the system antennas as high as possible, and the correlation between the 3D radiation patterns of the two antennas as low as possible. In general, RF separation of at least a quarter wavelength between the two antennas is required to achieve a minimum isolation and low pattern correlation. If possible, increase the separation to maximize the performance and fulfill the requirements in Table 12.

Item	Requirements	Remarks
Impedance	50 Ω nominal characteristic impedance	The impedance of the antenna RF connection must match the 50 Ω impedance of Antenna pins.
Frequency range	2400 – 2500 MHz 5150 – 5885 MHz	For 802.11b/g/n/ax and Bluetooth/802.15.4. For 802.11a/n/ac/ax.
Return loss	S11 < -10 dB (VSWR < 2:1) recommended S11 < -6 dB (VSWR < 3:1) acceptable	Defined by the interrelated S11 (Input Reflection Coefficient) parameter and Voltage Standing Wave Ratio (VSWR), the Return loss describes how well the primary antenna RF connection matches the 50 Ω characteristic impedance of the ANT pin. To maximize the amount of the power transferred to the antenna, the impedance of the antenna termination must match (as much as possible) the 50 Ω nominal impedance of the ANT pin over the entire operating frequency range .

Item	Requirements	Remarks
Efficiency	> -1.5 dB (> 70%) recommended > -3.0 dB (> 50%) acceptable	Radiation efficiency is the ratio of the radiated power to the power fed to the antenna input: the efficiency is a measure of how well an antenna receives or transmits.
Maximum gain	4.1 dBi @ 2.4 GHz 5.1 dBi @ 5 GHz	Although higher gain antennas can be used, these must be evaluated and/or certified. To comply with the radiation exposure limits of regulatory agencies, the maximum antenna gain must not exceed the value specified in the list of Approved antennas. See also Regulatory compliance.

Table 11: Summary of antenna interface requirements

Table 12 specifies additional requirements for implementing a dual antenna design.

Item	Requirements	Remarks
Isolation (in-band)	S21 > 30 dB recommended	The in-band isolation, defined by the S21 (Forward Transmission Coefficient) parameter measures the power transmission between two antennas. Lower isolation might be acceptable depending on use-case scenario and performance requirements.
Isolation (out-of-band)	S21 > 35 dB recommended S21 > 30 dB acceptable	Out-of-band isolation is evaluated in the band of the aggressor. This ensures that the transmitting signal from the other radio is sufficiently attenuated by the receiving antenna. It also avoids any saturation and intermodulation effect on the receiver port.
Envelope Correlation Coefficient (ECC)	ECC < 0.1 recommended ECC < 0.5 acceptable	The ECC (Envelope Correlation Coefficient) parameter correlates the far field parameters between antennas in the same system. A low ECC parameter is fundamental in improving the performance of MIMO-based systems.

Table 12: Summary of Wi-Fi/Bluetooth coexistence requirements

⚠ When operating dual antennas in the same 2.4 GHz band, sufficient isolation is critical for attaining an optimal throughput performance in Wi-Fi/Bluetooth/802.15.4 coexistence mode.

Select antennas that provide:

- Optimal return loss (or VSWR) over all the operating frequencies.
- Optimal efficiency figure over all the operating frequencies.
- An appropriate gain that does not exceed the regulatory limits specified in some regulatory country authorities like the FCC in the United States.

3.2.1.1 Integrated antenna design

If integrated antennas are used, the transmission line is terminated by the antennas themselves or by the antenna together with the connected coaxial cable and U.FL plug.

Consider the following guidelines when designing the antenna:

- The antenna design process should commence at the same time as the mechanical design of the product. PCB mock-ups are useful in estimating overall efficiency and radiation path of the intended design during early development stages.
- Integrated antennas are not suitable for placement inside a metal casing or if plastics including metal flakes is used for the product housing.
- Use antennas designed by an antenna manufacturer that provide the best possible return loss (or VSWR).
- Provide a ground plane large enough according to the related integrated antenna requirements. The ground plane of the application PCB may be reduced to a minimum size that must be similar to one quarter of wavelength of the minimum frequency that has to be radiated. The overall antenna efficiency may benefit from larger ground planes.

- Proper placement of the antenna and its surroundings is also critical for antenna performance. Avoid placing the antenna close to conductive or RF-absorbing parts, such as metal objects or ferrite sheets, as these may absorb part of the radiated power, shift the resonant antenna frequency of the antenna, or otherwise affect the antenna radiation pattern.
- Ensure that installation and deployment of the antenna system, including PCB layout and matching circuitry, is done correctly. In this regard, it is recommended that you strictly follow the specific guidelines provided by the antenna manufacturer.
- Antennas may require tuning/matching to reach the target performance. It is recommended to plan measurement and validation activities with the antenna manufacturer before releasing the end-product to manufacturing.
- The receiver section may be affected by noise sources like hi-speed digital busses. Avoid placing the antenna close to busses as DDR. Otherwise, consider taking specific countermeasures, like metal shields or ferrite sheets, to reduce the interference.
- Be aware of interaction between co-located RF systems, like nearby LTE bands and other possible radio systems. Transmitted power may interact or disturb the performance of MAYA-W4 modules where specific LTE filter is not present.

3.2.1.2 RF transmission line design

RF transmission lines, such as those that connect from **RF_ANT** pins to their related antenna connectors or antenna, must be designed with a characteristic impedance of 50 Ω.

Figure 8 shows the design options for implementing a transmission line, namely:

- Microstrip – track separated with dielectric material and coupled to a single ground plane.
- Coplanar microstrip – track separated with dielectric material and coupled to both the ground plane and side conductor. This is the most common transmission line implementation.
- Stripline – track separated by dielectric material and sandwiched between two parallel ground planes.

The parameters shown in the cross-sectional area of each trace design include:

- Width (W) – shows the width of the copper layer on the top layer
- Distance (S) – shows the distance between the top copper layer and the two adjacent GND planes.
- Dielectric substrate thickness (H) – shows the distance between the GND reference on the bottom plane and the copper layer on the top layer.
- Thickness of the copper layer (T) – can also be represented by “Base Copper Weight”, which is commonly used as the parameter for PCB stack-up.
- Dielectric constant (ε_r) defines the ratio between the electric permeability of the material against the electric permeability of free space.

☞ The width of a 50 Ω microstrip depends on mainly “ε_r” and “H”, which must be calculated for each PCB layer stack-up.

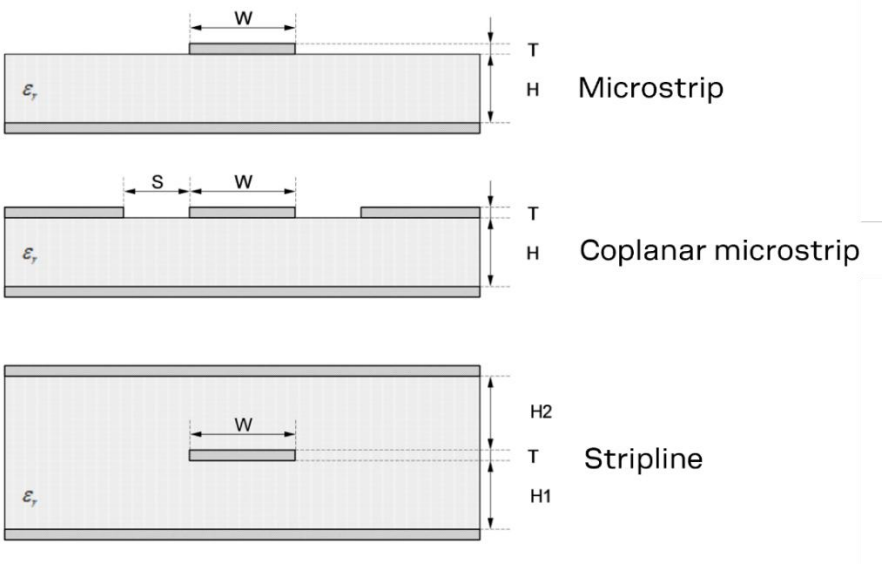

Figure 8: Transmission line trace design

Follow these recommendations to design a 50 Ω transmission line correctly:

- Designers must provide enough clearance from surrounding traces and ground in the same layer. In general, the trace to ground clearance should be at least twice that of the trace width. The transmission line should also be "guarded" by the ground plane area on each side.
- In the first iteration, calculate the characteristic impedance using tools provided by the layout software. Ask the PCB manufacturer to provide the final values usually calculated using dedicated software and production stack-ups. It is sometimes possible to request an impedance test coupon on side of the panel to measure the real impedance of the traces.
- Although FR-4 dielectric material can result in high losses at high frequencies, it can still be an appropriate choice for RF designs. In which case, aim to:
  - Minimize RF trace lengths to reduce dielectric losses.
  - If traces longer than few centimeters are needed, use a coaxial connector and cable to reduce losses.
  - For good impedance control over the PCB manufacturing process, design the stack-up with wide 50 Ω traces with width of at least 200 µm.
  - Contact the PCB manufacturer for specific tolerance of controlled impedance traces. As FR-4 material exhibits poor thickness stability it gives less control of impedance over the trace width.
- For PCBs with components larger than 0402 and dielectric thickness below 200 µm, add a keep-out, that is, some clearance (void area) on the ground reference layer below any pin on the RF transmission lines. This helps to reduce the parasitic capacitance to ground.
- Route RF lines in 45 ° angle and avoid acute angles. The transmission lines width and spacing to GND must be uniform and routed as smoothly as possible.
- Add GND stitching vias around transmission lines.
- Provide a sufficient number of vias on the adjacent metal layer. Include a solid metal connection between the adjacent metal layer on the PCB stack-up to the main ground layer.
- To avoid crosstalk between RF traces and Hi-impedance or analog signals, route RF transmission lines as far from noise sources (like switching supplies and digital lines) and any other sensitive circuit.
- Avoid stubs on the transmission lines. Any component on the transmission line should be placed with the connected pin located over the trace. Also avoid any unnecessary components on RF traces.

Figure 9 shows a coplanar trace design example connecting the module RF pin to an edge mounted SMA connector. From top to bottom right: top layer, layer 2, and layer 3.

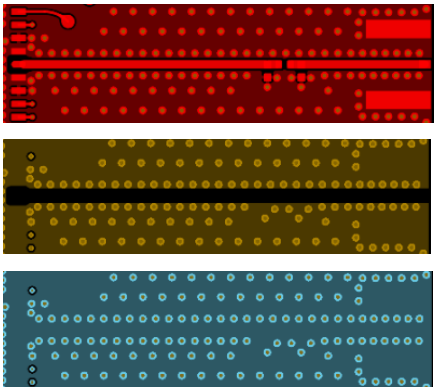

Figure 9: RF trace, coplanar microstrip, and ground design example

Figure 10 shows typical artwork implementing a coplanar microstrip on three adjacent layers. The trace includes – from the module pad to the SMA connector (module-side):

- Coplanar microstrip, section (1)
- Impedance matching PI network, (SMA-side)
- Coplanar microstrip, section (2), and
- Edge mounted SMA RF connector

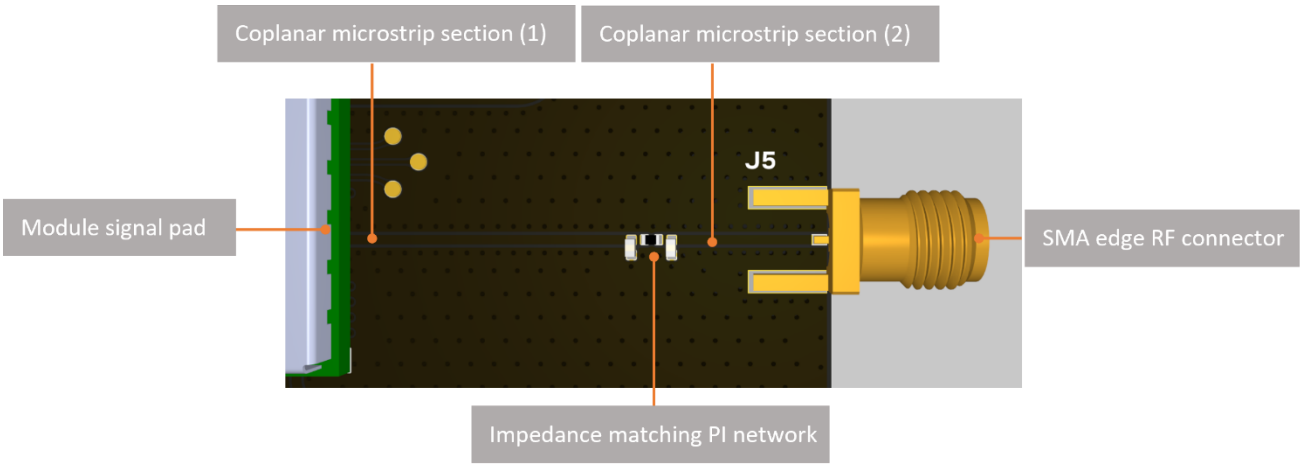

Figure 10: Layout example showing implementation

The ground clearance on layer 2 allows for a wider microstrip, which is less lossy than a narrow one. The ground clearance is especially critical in the 5 GHz band. A wider trace also has less impedance variation over PCB production batches due to the absolute tolerances in the PCB etching process.

Figure 11 shows the layout of pads for a U.FL connector. Pay special attention to the GND clearance under the signal pad, which must be implemented to minimize capacitive load.

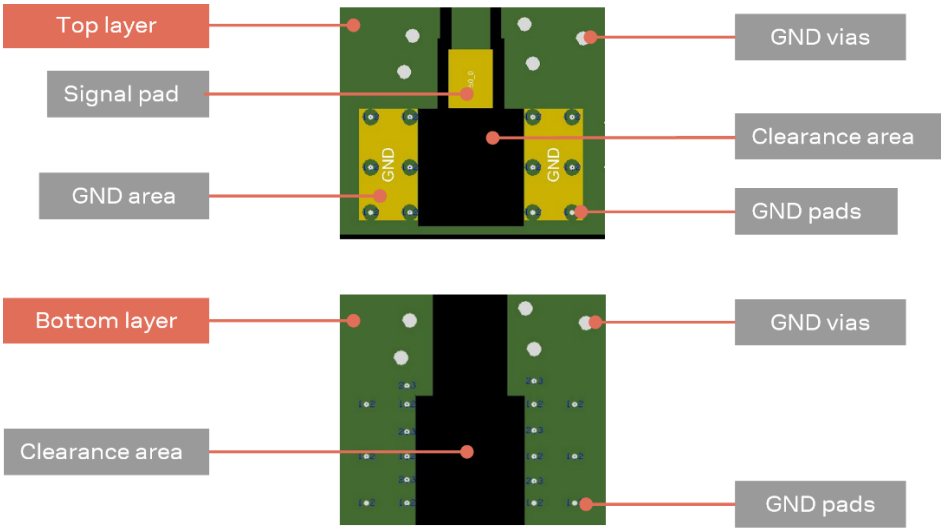

Figure 11: U.FL connector layout showing top layer (left) and inner layer 1 (right)

3.3 Supply interfaces

Power supply design significantly impacts RF performance and stability. To ensure optimal operation, select suitable power sources and appropriately rated bypass capacitors. Carefully route power supply nets or planes and incorporate robust power and ground planes in the PCB stack-up.

Pay close attention to the schematic, PCB layout, and the module supply design guidelines here.

3.3.1 Module supply design

Although the GND pins are internally connected in the module, it is advisable to connect all available ground pins on the application board to solid ground with a good (low impedance) connection to host PCB ground. This minimizes power loss, improves RF performance, and allows for more efficient thermal performance.

Low impedance connection of the module supply pins, supplied by a DC supply source, is required for accurate RF performance.

Consider the following guidelines when developing the schematic:

- All power supply pins must be connected to an appropriate DC source.
- Any series component with an Equivalent Series Resistance (ESR) greater than a few mΩ should be avoided. The only exception to this general rule is the use of ferrite beads for DC filtering. To avoid possible instability in the DC supply, only use ferrite beads if needed.
- For high-frequency filtering, additional bypass capacitors in the range of 100 nF to 1 µF are required on all supply pins. Offering low ESR/ESL resistance, a class II ceramic capacitor with an X7R or X5R dielectric is well suited for this purpose. Bypass capacitors of a smaller size can be chosen to minimize ESL (Equivalent Series Inductance) in the manufacturing process. The capacitor should be placed as close as possible to the module supply pin.

- To help filter current spikes from the RF section and avoid ground bounce, a minimum bulk capacitance of 10 µF should be applied to the **1V8**, **3V3**, and **3V_USB** rails (optionally on **VIO_SD** and **VIO**) and placed close to the module supply pins. Offering low ESR/ESL resistance, a class II ceramic capacitor with an X7R or X5R dielectric is well suited for this purpose. Special care should be taken in the selection of X5R/X7R dielectrics due to capacitance derating versus DC bias voltage.

3.3.1.1 Guidelines for supply circuit design using an SMPS

A Switched Mode Power Supply (SMPS) is generally recommended for converting the main supply to the module supply when the voltage difference is relatively high. In these circumstances, an SMPS dissipates less power and heat than an LDO. By contrast, an LDO is generally simpler to use and does not generate the amount of noise an SMPS might.

To avoid degrading the module stability, RF performance, or violating spurious emission standards, the characteristics of the SMPS should meet the following prerequisites:

- **Power capability:** The regulator, together with any additional filter in front of the module, must be capable of providing a voltage within the specified operating range. It must also be capable of delivering the specified peak current.
- **Low output ripple**: The peak-to-peak ripple voltage of the switching regulator must not exceed the specified limits. This requirement is appliable to both the voltage ripple generated by the SMPS at operating frequency and the high-frequency noise generated by power switching.
- **PWM/PFM mode operation**: It is advisable to select regulators that support a fixed Pulse Width Modulation (PWM) mode. Pulse Frequency Modulation (PFM) mode typically exhibits higher ripple and can affect RF performance. If power consumption is not a primary concern, PFM/PWM mode transitions should be avoided in favor of fixed PWM operation to reduce the peak-to-peak noise on the voltage rails. In mixed PWM/PFM mode, switching regulators can be used – provided that the PFM/PWM modes and transition between modes complies with the requirements.

3.3.1.2 Guidelines for supply circuit design using an LDO linear regulator

The use of a linear regulator is appropriate when the difference between the available supply rail and the module supply is relatively low. Linear regulators can also be considered for powering 1.8 V domains – particularly those having low current requirements and those cascaded from an SMPS-generated low voltage rail.

The characteristics of the Low Drop-Out (LDO) linear regulator used to power the voltage rails must meet the following prerequisites:

- **Power capabilities**: The LDO linear regulator must be able to provide a voltage within the specified operating range. It must also be capable of withstanding and delivering the maximum specified peak current while in “connected mode”.
- **Power dissipation**: The power handling capability of the LDO linear regulator must be checked to limit its junction temperature to the maximum rated operating range. The worst-case junction temperature can be estimated as shown below:

  $$T_{j,est} = (V_{in} - V_{out}) * I_{avg} * \theta_{ja} + T_a$$

  Where: θ_{ja} is the junction-to-ambient thermal resistance of the LDO package[3], I_{avg} is the current consumption of the given voltage rail in continuous TX/RX mode and T_a is the maximum operating temperature of the end product inside the housing.

[3] The thermal dissipation capability reported in datasheets is usually tested on a reference board with adequate copper area (see also JESD51 [10]). Junction temperature on a typical PCB can be higher than the estimated value due to the limited space to dissipate the heat. Thermal reliefs on pads also affect the capability of a device to dissipate heat.

3.4 Data communication interfaces

3.4.1 SDIO 3.0 interface

The SDIO 3.0 bus in MAYA-W4 series modules support a clock frequency up to 208 MHz, which means that special care must be taken to guarantee signal integrity and minimize electromagnetic interference (EMI) issues. The signals should be routed with a single-ended impedance of 50 Ω.

It is advisable to route all signals on the bus so that they are of the same length and the appropriate grounding in the surrounding layers. The total bus length should be kept to a minimum. To minimize crosstalk with other parts of the circuit, the layout of the SDIO bus should be designed with adequate isolation between its signals and surrounding busses/traces.

Implement an undisrupted return-current path in close vicinity to the signal traces. Figure 12 shows an optional application schematic for the SDIO bus in MAYA-W4, while Table 13 summarizes the electrical requirements of the bus. Even though MAYA-W4 includes on chip Pull-up resistors it is advisable to add external ones for optimum pull-up to match routing and host CPU impedance.

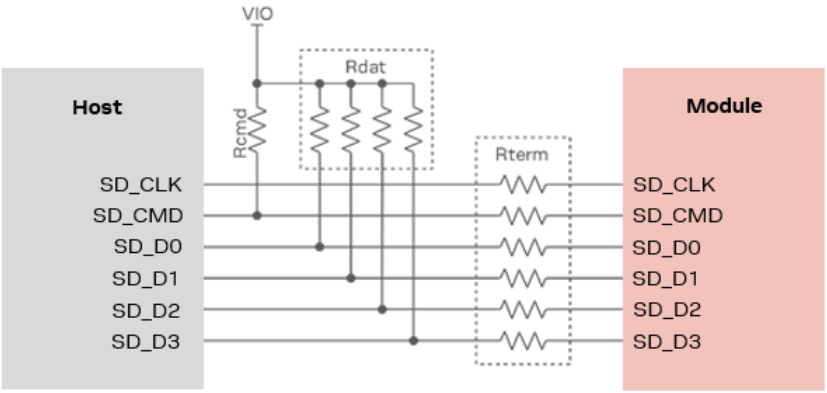

Figure 12: SDIO application schematic

☞ A small value capacitor in the range of a few pF to **GND** could be considered for **SD_CLK** as an EMI debug option and signal termination. This capacitor should be placed as close as possible to the MAYA-W4 clock input pin and can be assembled only for EMI purpose. The capacitor value adds to total line capacitance and must not exceed total allowed capacitance to avoid violating clock rise and fall timing specifications.

Signal group	Parameter	Min.	Typ.	Max.	Unit
CLK, CMD, DAT[0:3]	Single ended impedance, Z_0		50		Ω
CLK, CMD, DAT[0:3]	Impedance control	$Z_0 - 10\%$	Z_0	$Z_0 + 10\%$	Ω
DAT[0:3]	Pull-Up range, Rdat	10	47	100	kΩ
CMD	Pull-Up range, Rcmd	10	10	50	kΩ
CLK, CMD, DAT[0:3]	Series termination (Host side), Rterm[4]	0	0		Ω
CLK, CMD, DAT[0:3]	Bus length[5]			100	mm
CMD, DAT[0:3]	Bus skew length mismatch to CLK	-3		+3	mm
CLK	Center to center CLK to other SDIO signals[6]	4*W			
CMD, DAT[0:3]	Center to center between signals[11]	3*W			

Table 13: SDIO bus requirements

[4] Series termination values larger than typical recommended only for addressing EMI issues
[5] Routing should minimize the total bus length.
[6] To accommodate BGA escape, center-to-center spacing requirements can be ignored for up to 10 mm of routed length.

3.4.2 USB 2.0 interface

MAYA-W4 includes a Hi-Speed USB 2.0 interface with a transfer rate of 480 Mb/s. The interface is implemented as a controlled impedance bus, utilizing a differential data pair (D+ and D-) to mitigate noise, reduce crosstalk, and maintain signal integrity. Figure 13 shows the key parameters for calculating track impedance, where:

- Width (W) – shows the width of the copper layer on the top layer
- Distance (S) – shows the distance between the top copper layer and the two adjacent GND planes.
- Dielectric substrate thickness (H) – shows the distance between the GND reference on the bottom plane and the copper layer on the top layer.
- Thickness of the copper layer (T) – can also be represented by "Base Copper Weight", which is commonly used as the parameter for PCB stack-up.
- Dielectric constant (ε_r) defines the ratio between the electric permeability of the material against the electric permeability of free space.

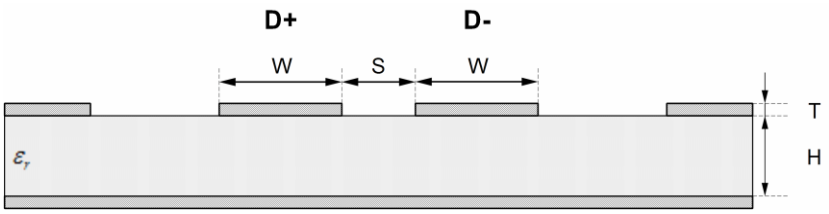

Figure 13: USB differential pair showing key parameters for controlled impedance

To avoid EMI issues and ensure the integrity of the bus signals, the USB data lines must follow the recommendations described in Table 14.

Signal group	Parameter	Min.	Typ.	Max.	Unit
USB differential data	Single Ended impedance, Z_{SE}	45			Ω
	Differential impedance, Z_{diff}		90		Ω
	Common mode impedance, Z_{CM}		30		Ω
	Impedance control, Z_{SE}, Z_{diff}, Z_{CM}	$Z_0 - 10\%$	Z_0	$Z_0 + 10\%$	
	Shunt capacitance to GND			5	pF
	Bus skew length mismatch between differential pair		0	15[7]	mm
	Isolation to other signals	4 w			

Table 14: USB bus requirements

☞ USB data signals routed on the host board can influence RF performance. Shunt capacitors or an ESD protection filter connected to GND may be needed to reduce in-band noise from USB harmonics.

If the USB data link is routed on a connector, consider ESD protection and use specifically designed TVS diodes and common-mode chokes to reduce electromagnetic interference (EMI), for the USB lines. To avoid signal degradation, select common-mode chokes with suitable inductance and current rating.

[7] Total mismatch includes skew introduced by cable and host side routing, keep it at minimum if USB bus is routed on a connector.

3.4.3 High-speed UART interface

The high-speed UART interface for the MAYA-W4 complies with the Bluetooth HCI UART Transport layer. The module uses the settings shown in Table 15.

UART Settings	
Baud rate default after reset	115 200 baud
Baud rate default after firmware load	115 200 baud
Data bits	8
Parity bit	No parity
Stop bit	1 stop bit
Flow Control	RTS/CTS

Table 15: HCI UART transport layer settings

RTS/CTS flow control is used to prevent temporary UART buffer overrun.

- If RTS is 0 (output, active low), the module is ready to receive, and the host is allowed to send.
- If CTS is 0 (input, active low), the host is ready to receive, and the module is allowed to send.

☞ The use of hardware flow control with RTS/CTS is mandatory.

Baud rate				
1200	38400	460800	1500000	3000000
2400	57600	500000	1843200	
4800	76800	921600	2000000	
9600	115200	1000000	2100000	
19200	230400	1382400	2764800	

Table 16: Possible baud rates for the UART interface

After a hardware reset, the UART interface is configured for 115 200 baud. See Bluetooth driver bring-up for information on how to change the baud rate.

3.5 General high-speed layout guidelines

These guidelines describe the best practices for the layout of all high-speed busses on MAYA-W4. Designers should prioritize the layout of higher speed busses. Low frequency signals, other than those with high-impedance traces, are generally not critical to the layout.

⚠ Low frequency signals with high-impedance traces (such as signals driven by weak pull resistors) can be affected by crosstalk. For these high impedance traces, a supplementary isolation of 4*W (four times the line width) from other busses is recommended.

3.5.1 General considerations for schematic design and PCB floor planning

- Verify which signal bus requires termination and add appropriate series resistor terminations to the schematics.
- Carefully consider the placement of the module with respect to the antenna position and host processor. Minimize RF trace length first and then the SDIO bus length.
- SDIO bus routing must aim to keep layer-to-layer transition to a minimum.
- Verify the allowable stack-ups, and the controlled impedance dimensioning for antenna traces and busses, with the PCB manufacturer.
- Verify that the power supply design and power sequence are compliant with the MAYA-W4 specifications described in System function interfaces.

3.5.2 Component placement

- Accessory parts like bypass capacitors must be placed as close as possible to the module to improve filtering capability. Prioritize placing the smallest capacitors close to module pins.
- Do not place components close to the antenna area. Follow the recommendations of the antenna manufacturer to determine distance of the antenna in relation to other parts of the system. Designers should also maximize the distance of the antenna to High-frequency busses, like DDRs and related components. Alternatively, consider an optional metal shield to reduce interferences that might otherwise be picked up by the antenna and subsequently reduce module sensitivity.

3.5.3 Layout and manufacturing

- Avoid stubs on high-speed signals. Test points or component pads should be placed over the PCB trace.
- Verify the recommended maximum signal skew for differential pairs and length matching of buses.
- Minimize the routing length; longer traces degrade signal performance. Ensure that the maximum allowable length for high-speed busses is not exceeded.
- Ensure to track any impedance matched traces. Consult early with the PCB manufacturer for proper stack-up definition.
- RF, analog, and digital sections should have dedicated and clearly separated areas on the board.
- No digital routing is allowed in the GND reference plane area of RF traces (ANT pins and Antenna).
- Designers are strongly recommended to avoid digital routing beneath all layers of RF traces.
- Ground cuts or separation are not allowed below the module.
- As a priority, minimize the length of the RF traces. Then, minimize bus length to reduce potential EMI issues related to the radiation of digital busses.
- Couple all traces (Including low speed or DC traces) with a reference plane (GND or power).
- Hi-speed busses are not allowed to change reference plane. If a change to the reference plane is unavoidable, some capacitors and an adequate number of vias, connecting the reference planes, must be added in the area of transition to provide a low impedance return path through the various reference planes.
- Trace routing should maintain a distance that is greater than 3*W from the edge of the ground plane routing.
- Power planes should maintain a safe distance from the edge of the PCB. The distance must be sufficient to route a ground ring around the PCB, and the ground ring must then be stitched to other layers through vias.
- Route the power supply in low impedance power planes. If you choose to route the power supply with traces, do not route loop structures.

⚠ The heat dissipation during continuous transmission at maximum power can significantly raise the temperature of application baseboards under MAYA-W4 series modules. Avoid placing temperature sensitive devices close to the module and provide these devices with sufficient grounding to transfer generated heat to the PCB.

3.6 Module footprint and paste mask

Figure 14 shows the pin layout of MAYA-W4 series modules. The proposed land pattern layout complements the pin layout of the module. Both Solder Mask Defined (SMD) and Non-Solder Mask Defined (NSMD) pins can be used with adherence to the following considerations:

- All pins should be Non-Solder Mask Defined (NSMD)
- To help with the dissipation of the heat generated by the module, GND pads must have good thermal bonding to PCB ground planes.

The suggested stencil layout for MAYA-W4 modules should follow the copper pad layout, also shown in Figure 14.

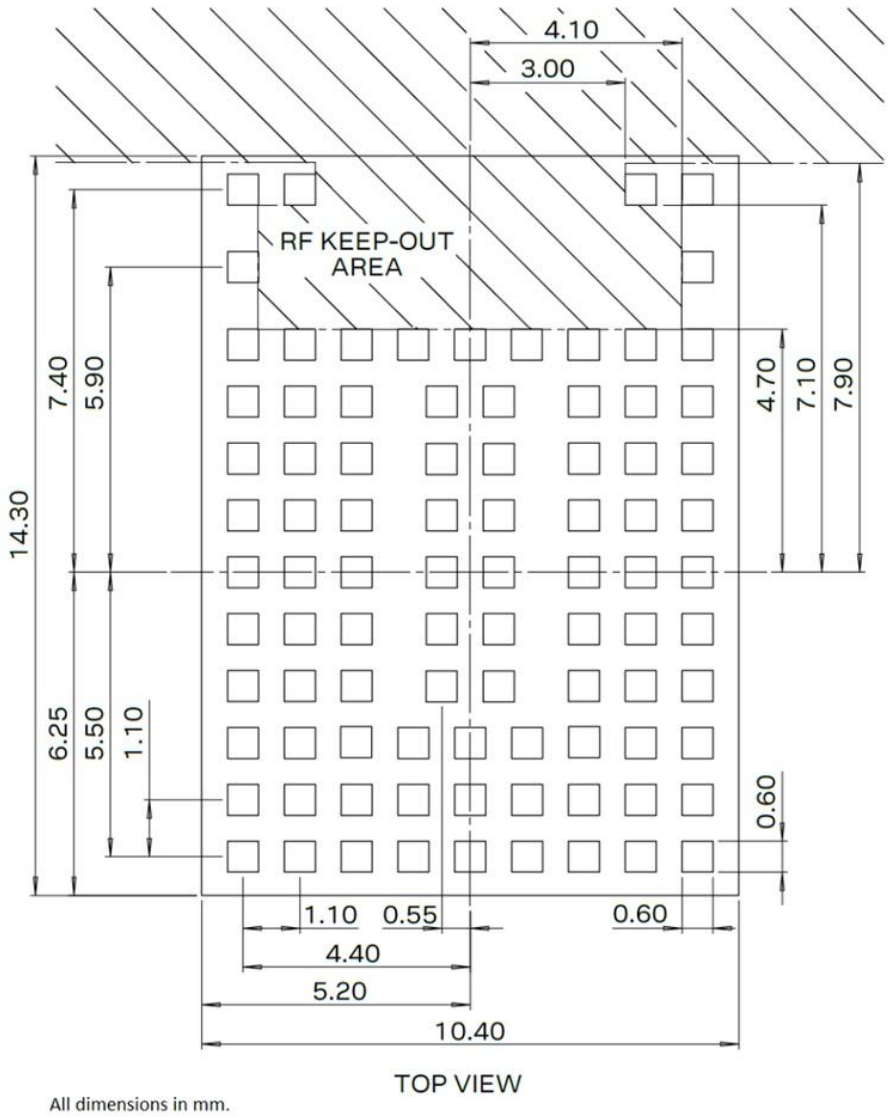

Figure 14: Recommended footprint for MAYA-W4, bottom view

The "RF KEEP_OUT AREA" is only applicable on MAYA-W4x6 variants when using the internal PCB antenna. The "RF KEEP_OUT AREA" can be omitted for the other module variants.

3.7 Thermal guidelines

MAYA-W4 series modules are designed to operate from -40 °C to +85 °C at an ambient temperature inside the enclosure box. The board generates heat during high loads that must be dissipated to sustain the lifetime of the components.

Improving thermal dissipation in the module decreases its internal temperature and consequently increases the long-term reliability of device applications operating at high ambient temperatures. The module generates large amounts of thermal power during high loads that must be dissipated.

For best performance, application PCB layouts should adhere to the following guidelines:

- Vias specification for ground filling: $300/600\mu m$, with no thermal reliefs allowed on vias.
- Ground via densities under the module: $50\ vias/cm^2$; thermal vias can be placed in gaps between the thermal pads of the module.

- Minimum layer count and copper thickness: $4\ layers$, $35\ \mu m$.
- Minimum board size: $55x70\ mm$.
- To optimize the heat flow from the module, power planes and signal traces should not cross the layers beneath the module.

These recommendations facilitate a design that is capable of achieving a thermal characterization parameter of $\psi_{JB} = TBD\ °C/W$ for MAYA-W4x6 and $\psi_{JB} = TBD°C/W$ for other MAYA-W4 variants, where JB refers to the junction between the module and the bottom side of the main PCB characterization parameter.

Use the following hardware techniques to further improve thermal dissipation in the module and optimize its performance in customer applications:

- Maximize the return loss of the antenna to reduce reflected RF power to the module.
- Improve the efficiency of any component that generates heat, including power supplies and processor, by dissipating it evenly throughout the application device.
- Provide sufficient ventilation in the mechanical enclosure of the application.
- For continuous operation at high temperatures, particularly in high-power density applications or smaller PCB sizes, include a heat sink on the bottom side of the main PCB. The heat sink is best connected using electrically insulated / high thermal conductivity adhesive[8].

3.8 ESD guidelines

In compliance with the following European regulations, designers must implement proper protection measures against ESD events on any pin exposed to end users:

- ESD testing standard CENELEC EN 61000-4-2 [4]
- Radio equipment standard ETSI EN 301 489-1 [5]

The minimum requirements as per these European regulations are summarized in Table 17.

Application	Category	Immunity level
All exposed surfaces of the radio equipment and any ancillary equipment in the end product.	Contact discharge	4 kV
	Air discharge	8 kV

Table 17: Minimum ESD immunity requirements based on EN 61000-4-2

Compliance with the protection levels specified in EN 61000-4-2 [4] are fulfilled by including proper ESD protection in parallel to any susceptible trace that is close to areas accessible to end users.

⚠ Special care should be taken with the **RF_ANT** pins that, if exposed, might be needed to be protected with an ESD absorber with adequate parasitic capacitance. For 5 GHz operation, a protection with maximum internal capacitance of 0.1 pF is advised.

3.9 Design-in checklists

3.9.1 Schematic checklist

☐ Check that the module pins have been properly numbered and designated in the schematic (including thermal pins). See Pin definition in the MAYA-W4 data sheet [1].
☐ Power supply design complies with the voltage and power supply requirements described in the module data sheet [1].
☐ The Power-up sequence has been properly implemented.
☐ Adequate bypassing has been included in front of each power pin as described in Component placement.

[8] Typically not required.

- ☐ Each signal group is consistent with its own power rail supply or proper signal translation has been provided. See Pin definition in the MAYA-W4 data sheet [1].
- ☐ Configuration pins are properly set at bootstrap. See Configuration pins.
- ☐ SDIO bus includes series resistors and pull-ups, if needed. See also Figure 12 and SDIO 3.0 interface.
- ☐ Unused pins are properly terminated. See Unused pins.
- ☐ A pi-filter is provided in front of each antenna for final matching. High-speed UART interface.
- ☐ Additional RF co-location filters have been considered in the design. See block diagrams in the MAYA-W4 data sheet [1].

3.9.2 Layout checklist

- ☐ PCB stack-up and controlled impedance traces follow the recommendations given by the PCB manufacturer. See RF transmission line design.
- ☐ All pins are properly connected, and the footprint follows u-blox pin design recommendations. See Module footprint and paste mask.
- ☐ Proper clearance has been provided between the RF and digital sections of the design. See Layout and manufacturing.
- ☐ Proper isolation has been provided between antennas (RF co-location, diversity, or multi-antenna design). See Layout and manufacturing.
- ☐ Bypass capacitors have been placed close to the module. See Component placement.
- ☐ Low impedance power path has been provided to the module. See Component placement.
- ☐ Controlled impedance traces have been properly implemented in the layout (both RF and digital) and the recommendations provided by the PCB manufacturer have been followed. See RF transmission line design and Component placement.
- ☐ 50 Ω RF traces and connectors follow the rules described in Antenna design.
- ☐ RF keep-out area has been implemented for MAYA-W4x6 variants using the internal antenna.
- ☐ Antenna integration has been reviewed by the antenna manufacturer.
- ☐ Proper grounding has been provided to the module for the low impedance return path and heat sink. See Layout and manufacturing.
- ☐ Reference plane skipping has been minimized for high frequency busses. See Layout and manufacturing.
- ☐ All traces and planes are routed inside the area defined by the main ground plane. See Layout and manufacturing
- ☐ u-blox has reviewed and approved the PCB[9].

[9] This is applicable only for end-products based on u-blox reference designs.

4 Module migration

Application products may be designed so that they can migrate from one module generation to another typically to reduce unutilized functionality, lower production costs or integrate a later module design to include additional functionality that is unavailable in an existing design.

All modules in the MAYA family share the same physical size (mechanical dimensions) and the same land pattern, which allows them to be used interchangeably in your application design. However, slight deviations in pin assignments, such as which pins serve specific functions, or the exact layout of the land pattern can occur between the various module generations.

To design your product application for migration to either a later or an earlier module generation:

- Create a draft design integrating the target module - that is, the main module you plan to include in your product.
- To get an overview of the pinout commonalities and deviations between the different module generations, compare the pin assignment tables of the modules and the schematic drawings of your application design carefully.
- Mitigate all identified differences using the information in this chapter.

4.1 Generic considerations

Several aspects of migrating to previous and later module generation apply universally to all u-blox modules:

- **Host interfaces** are implemented consistently supported in all module generations and are always assigned to the same pins. Modules that support additional functions might include dedicated non-generic interfaces.
- **Configuration pins** used for selecting interfaces are always assigned to the same pins, but the number of configuration pins might differ between the different module generations. Implement PD resistor placeholders to include the full set of configuration pins. Make sure that the additional "inactive" configuration pins are in correct state during power-up. This is particularly important if the additional configuration pins are connected and used by other circuitry.
- **Control signals** are generally identical for modules with chips from the same supplier. Use 0 Ω series resistors to connect or disconnect the signals to use or not to use – according to your choice.
- **Power supplies** are commonly assigned to the same pins for all modules generations. Use standard series voltage regulators to conveniently change the voltage and current capabilities - if needed. Power switches can be used if the supply voltages are already available.
  Key considerations include:
  - Implement voltage supplies sources, LDO's or SMPS's, by using standard series voltage regulators, which enable the use of drop-in compatible versions to achieve the desired voltage level for the specific used module.
  - Current budget. Ensure the current budget of the application hardware is designed to support all module variants, including the one with the highest current consumption.
  - Power On and off sequence. Use Host CPU GPIOs to enable voltage regulators or load switches in the appropriate order during the start-up sequence of the target module generation. Alternatively use hardware-sequenced implementations.
- **RF interface** connections are commonly assigned to the same pins.
- **Unused pins:** All pins have internal keeper resistors. Leave unused pins open. NC pins are commonly not connected inside the module.

☞ Software differs between each module generation and is not within the scope of this chapter.

4.2 MAYA-W4 migration

Several aspects of migration to a later module generation are unique to the MAYA family.

4.2.1 Data interfaces

MAYA-W4 includes interfaces for Wi-Fi, Bluetooth, and 802.15.4 data communication. Implement these according to the instructions in this document. The interface selection is activated during start-up according to the logic state of the configuration pins.

- SDIO interface for Wi-Fi positioned on generic MAYA pins. The SDIO interface includes an optional interrupt output signal that may be used for data transfer requests in your design.
- UART interface for Bluetooth is implemented on generic MAYA pins.
- SPI interface for 802.15.4 Wi-Fi. This is not a standard interface for the MAYA family. Use 0 Ω resistors to connect or disconnect this interface or optionally set the connected HOST CPU's pins to high impedance. The SPI interface includes an interrupt output signal that may also be utilized in the design.
- USB interface for Wi-Fi and Bluetooth. This is not generic interface for the MAYA family. The default USB implementation includes series resistors on DM and DP, which can be used to connect or disconnect the USB from the MAYA module. **3V3_USB** is power supply for the USB interface. On other MAYAs this physical pin is used for **3V3** supply.

4.2.2 Configuration pins

MAYA-W4 includes three configuration pins (CON[2:0]) for interface selection and two additional pins (CON[3] and CON[5]) for other configurations. It is important that all of these pins are in the correct state during start-up. The CON[3] and CON[5] pins can be left unconnected (NC), but if they are connected, make sure that they are not pulled low by any external circuitry during boot-up.

- Dedicated configuration pins CON[2:0] allocated on generic pins.
- Additional configuration pins CON[3] and CON[5]. These pins can be optionally used for other purposes but must be set to the correct state during boot-up, as described in the MAYA-W4 data sheet [1].

☞ Configuration pins can deviate between MAYA family modules. Study this document and the respective data sheet [1] for the targeted modules. In preparation for future migration, implement the full set of configuration pins by adding "placeholders" for pull-down resistors.

4.2.3 Wake-up and Reset interface

MAYA-W4 includes the generic set of NXP control signals.

- Power Down signal, **PDn**, with a pull-up resistor included in the module. **PDn** is allocated to a standard pin for MAYA family modules with NXP chipset.
- Individual reset signals: one for Wi-Fi and another for IEEE 802.15.4 (Zigbee) and Bluetooth narrowband channels. Connect these to Host CPU via 0 Ω resistors to implement these functions required for your chosen module generation.
- Wake up signals for Module to Host CPU and Host CPU to Module. Optionally connect these through 0 Ω resistors.

☞ Reset and Wake-up signals might differ between modules. Study the data sheet and the system integration manual for the target module generation to decide which signals to implement. Handle deviations with either series 0 Ω resistors or set the Host CPU pin to high impedance.

4.2.4 Power-up

The Power-up sequences generally differ for each module generation. In all MAYA module generations, the power down signals (**PDn** or **WL_EN/BT_EN**) must be set low during the power up before external supplies are applied.

In MAYA-W4, **PDn** must be held low during start up and released when the power is stable, or later when the module is powered on. Other than this, there are no additional requirements for the power-up sequence. The external power rails can be applied in any order – provided that **PDn** remains low.

☞ For correct implementation, study the data sheet [1] and the system integration manual for the target module generation.

4.2.5 Power supply

The power supply pins are in the same position across all MCU generations. Implement the specified supply voltages to support the required current consumption.

☞ For MAYA-W4 the pin **3V3_USB** source power to the USB section in MAYA-W4. This is allocated to one of the **3V3** pins that for other MAYA generations use this pin as power supply.

☞ To avoid current leakage, connect the supply voltage to **3V3_USB** pin through a series 0 Ω resistor. That way, the power supply can be disconnected for MAYA-W4 modules not using USB.

4.2.6 RF

The RF signals are implemented on generic pins, which are positioned consistently across all module generations. These signals all have 50 Ω characteristic impedance. Ensure that the antenna Pi network is consistent across all module generations. Otherwise, impedance matching may need to be adjusted to account for slight variations between module variants.

☞ The RF standard and frequency band used for each RF pin might differ. For correct implementation, study the data sheet [1] and the system integration manual for the target module generation.

4.2.6.1 Internal antenna

Place modules with internal antennas on the application PCB in accordance with the information described within the system integration manual.

- Niche antennas must be placed on the edge of the application PCB with the antenna facing outwards.
- Any copper, traces, or GND planes, must be cleared on all layers beneath the module's antenna area.

4.2.6.2 External antenna

Connect external antennas with 50 Ω microstrips and 50 Ω RF connectors. If needed, tune the antenna matching PI network components to achieve full antenna performance.

If migrating to a module operating in an extended frequency band, make sure that the selected antenna covers the required frequency bands.

4.3 Mechanical design

All module generations are mechanically compatible and share the same land pattern design – with some exceptions that are described in the *Mechanical specification* of the data sheet [1] .

4.4 Production and handling

The soldering process and profile are the same for all module generations. When preparing for reflow soldering, note that the number of reflow cycles can be dissimilar between each module generation and each module variant.

5 Software

The chapter describes the available software options for MAYA-W4 series modules, which are based on the NXP IW610 chipset family. The drivers and firmware required to operate MAYA-W4 series modules are developed by NXP and are pre-integrated into the Linux/Android BSP for NXP i.MX processors [12] and the MCUXpresso SDK for NXP MCU devices [13].

Documentation for the NXP software releases includes release notes and a list of supported software features. The drivers are provided free of charge as open-source code under NXP licensing terms.

☞ As open-source code, the drivers can be integrated or ported to other non-NXP based host platforms.

5.1 Available software packages

5.1.1 Open-source Linux/Android drivers

The Wi-Fi driver and firmware for MAYA-W4 series modules are integrated into the Linux BSP for NXP i.MX processors. Yocto recipes for the driver and firmware, that can be used to develop custom Linux-based systems, are part of the NXP i.MX Linux BSP.

The latest version of the driver source code and Wi-Fi/Bluetooth firmware are available from the following open-source repositories[10]:

- Wi-Fi driver: https://github.com/nxp-imx/mwifiex
- Firmware: https://github.com/nxp-imx/imx-firmware/

☞ Use the repository branches matching the latest Linux BSP release version. At the time of this document publication, this is release lf-6.12.3_1.0.0.

☞ Check for the latest BSP release and available incremental patch releases on the NXP i.MX Linux page [12].

Yocto recipes for the driver and firmware (`nxp-wlan-sdk, kernel-module-nxp-wlan, firmware-nxp-wifi`) are included in the NXP meta-imx and meta-freescale layers.

Bluetooth uses the `hci_uart` or `btnxpuart` driver from the Linux kernel and BlueZ host stack. The OpenThread stack (provided by Google Nest Team) and Matter (Project CHIP) are used for 802.15.4 based applications. NXP provides an OpenThread binary that can be run as a Thread application, or it can be built from source code.

5.1.2 MCUXpresso SDK

The MCUXpresso SDK [13] is a comprehensive software enablement package for MCU devices from NXP. It includes production-grade software with optionally integrated real-time operation systems (RTOS), integrated enabling software technologies (stacks and middleware), reference software, and more. The SDK includes the Wi-Fi, Bluetooth and 802.15.4 drivers and firmware for supported NXP MCUs.[11]

[10] Open-source USB support is planned for Q3/25. Contact your local support team for other software option.
[11] FreeRTOS MCUXpresso SDK support for IW610 SDIO is planned for Q3/25.

5.2 u-blox software deliverables

u-blox also supplies the following additional software deliverables for MAYA-W4 series modules:

- A Yocto/OpenEmbedded meta layer, which includes recipes for related development tools. For more information about the Yocto layer, see also Yocto meta layer.
- Wi-Fi transmit power tables for the certified regulatory domains.

☞ For the latest MAYA-W4 series software deliverables, contact your local support team.

5.2.1 Yocto meta layer

Yocto is an open-source project aimed at helping the development of custom Linux-based systems for embedded products. It provides a complete development environment with tools, documentation, and metadata like recipes, classes, and configuration. Yocto is based on the OpenEmbedded build system.

A Yocto/OpenEmbedded meta layer "meta-ublox-modules" is provided by u-blox for all host-based modules. This layer is used in Yocto projects to build the image for most host platforms that run Linux kernels. It contains the recipes used to build the Linux drivers, support tools, and any configuration files that are needed to operate the modules.

Item	Description
Build recipe	Includes all the instructions to extract, compile, and install the drivers, firmware and tools in the root file system of the host system image.
Patches	Used to fix bugs in u-blox-distributed drivers seen either locally or reported by the vendor.
Calibration files	Calibration files, provided by u-blox, used while loading the driver. These files store the tuning parameters needed for RF parts in the module, like the crystal.
Output power configuration	RF power specific files for the different bands, rates and countries are stored in the configuration files provided by u-blox.
Modprobe rules	Configuration files for the modprobe utility used to store the driver load parameters.
Manufacturing package recipes	Includes different recipes for building the manufacturing tools. These recipes are used in production and RF-related tests.

Table 18: Yocto layer content

☞ Calibration files are needed for the modules during the prototype stage of development. After prototyping, all required calibrations are programmed into the OTP on the module.

☞ Further information about the Yocto layer and how to integrate it into the development environment is provided in the `README` files of the meta layer.

5.3 Software architecture

From a software perspective, host-based MAYA-W4 series modules contain only on-board OTP memory with calibration parameters and MAC addresses. Consequently, the modules require a host-side driver and device firmware to run. At startup and at every reset or power cycle, the host driver needs to download the firmware binary file to the module. The firmware binary file is typically a "combo" firmware, which comprises the Wi-Fi, Bluetooth, and 802.15.4 firmware images. This file is downloaded to the module by the Wi-Fi driver through the Wi-Fi host interface.

Figure 15 shows the different software components and upper layers required for the operation of MAYA-W4 series modules in a Linux OS.

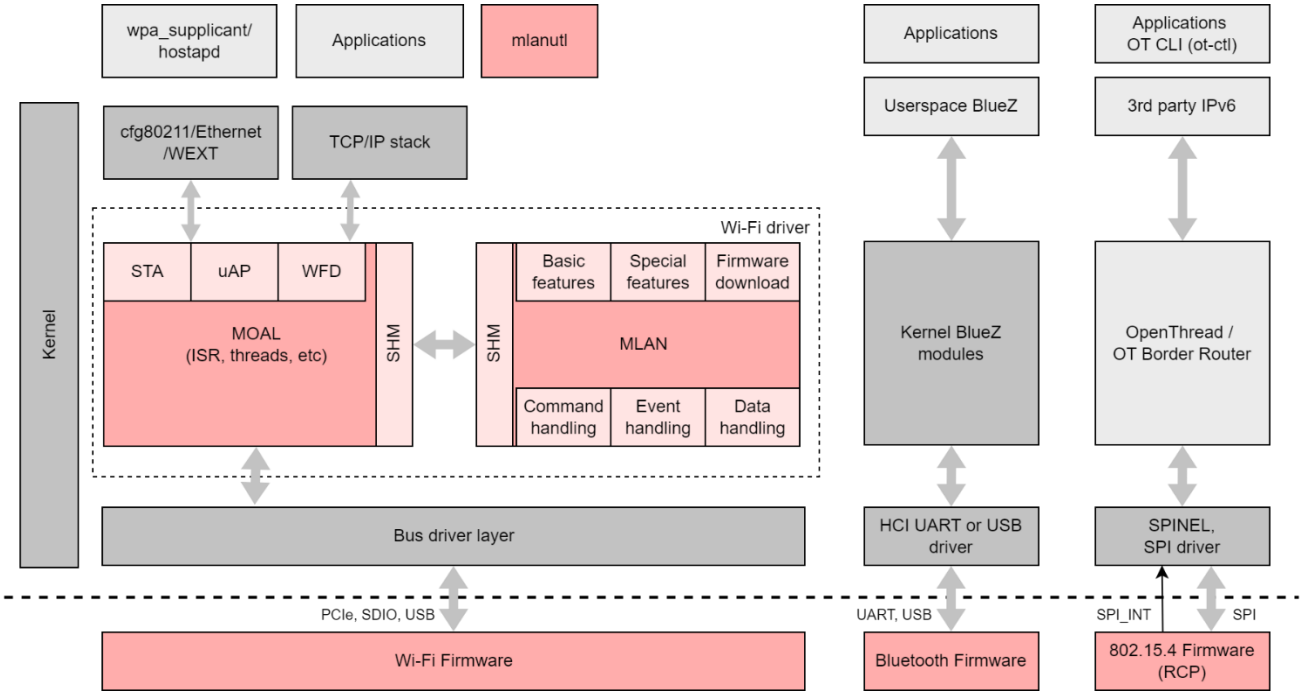

Figure 15: Basic Wi-Fi, Bluetooth, and 802.15.4 software architecture

The Wi-Fi driver (*mxm_mwifiex*) is a unified driver for all supported NXP Wi-Fi chipsets, which allows simple migration and forward compatibility with future devices. Driver sources can be used or ported for other non-NXP host platforms. The Wi-Fi host driver interfaces the lower-layer bus drivers with the upper-layer protocol stacks of the operating system. It uses the TCP/IP stack from the Linux kernel for data transmission, and the `cfg80211` subsystem in the kernel is used for configuration and control.

Bluetooth uses the Linux BlueZ host stack through the HCI UART interface of the module, but other third-party stacks can also be supported. The `hci_uart` or `btnxpuart` driver from the Linux kernel is used for the serial UART interface of the module.

Thread is an IPv6-based networking protocol designed for low-power *Internet of Things* devices in an IEEE802.15.4 wireless mesh network. OpenThread [18], released by Google, is an open-source implementation of Thread. The 802.15.4 subsystem of MAYA-W4 works as controller in OpenThread Radio Co-Processor (RCP) design. The OpenThread core runs on the host processor and communicates with the controller via OpenThread Daemon (Ot-daemon) through SPI interface over the Spinel protocol. Clients can connect to the UNIX socket of the Ot-daemon and communicate using OpenThread CLI as a protocol. A Thread Border Router (see OpenThread Border Router [19]) connects a Thread network to other IP-based networks, such as Wi-Fi or Ethernet.

5.4 Bringing-up the Linux drivers

When initializing, configuring, and activating Wi-Fi, Bluetooth, and 802.15.4 radios for the first time, the "bring-up" process involves loading the necessary drivers, configuring settings, and ensuring that the hardware components are functioning correctly. Use the procedures described in this section to get the wireless radios up and running for the first time under Linux.

5.4.1 Wi-Fi driver

5.4.1.1 SDIO host interface

To bring up the Wi-Fi driver with the SDIO host interface:

1. Prior to loading the driver, check the kernel log to make sure that the MAYA-W4 series module is reported on the SDIO bus of the host system, as shown in the following example:

```
mmc1: new ultra high speed SDR104 SDIO card at address 0001
```

2. Use the following command to load the Wi-Fi driver and firmware:

```
root@imx8mqevk:~# modprobe moal mod_para=nxp/wifi_mod_para.conf
```

The Wi-Fi driver parameters are configured in the `/lib/firmware/nxp/wifi_mod_para.conf` file in a chipset-specific block for MAYA-W4:

```
SDIW610 = {
        cfg80211_wext=0xf
        max_vir_bss=1
        cal_data_cfg=none
        ps_mode=1
        auto_ds=1
        host_mlme=1
        fw_name=nxp/sduartspi_iw610.bin.se
}
```

In this configuration, the Wi-Fi driver downloads combo-firmware for Wi-Fi, Bluetooth, and 802.15.4 to the module. Other firmware options for the SDIO-UART-SPI host interface configuration are shown in Table 19.

Firmware image	Description
sduartspi_iw610.bin.se	Combo-firmware for Wi-Fi (SDIO), Bluetooth (UART), and 802.15.4 (SPI)
sduart_iw610.bin.se	Combo-firmware for Wi-Fi (SDIO) and Bluetooth (UART)
sd_iw610.bin.se	Wi-Fi only firmware for parallel download (SDIO)
uartspi_iw610.bin.se	Bluetooth (UART) and 802.15.4 (SPI) firmware for parallel download
uart_iw610_bt.bin.se	Bluetooth only firmware for parallel download (UART)

Table 19: SDIO-UART-SPI firmware images

3. Use the following command to search and display the Wi-Fi driver and firmware versions:

```
root@imx8mqevk:~# cat /proc/mwlan/adapter0/mlan0/info | grep version
driver_version = SDIW610---18.99.5.p56-MM6X18505.p23-GPL-(FP92)
firmware_major_version=18.99.5
```

5.4.1.2 USB host interface

To bring up the Wi-Fi driver with the USB host interface:

1. Prior to loading the driver, make sure that the MAYA-W4 series module is reported on the USB bus of the host system. The `lsusb` command can be used to list the connected USB devices:

```
root@imx8mqevk:# lsusb
Bus 001 Device 003: ID 0471:0214 Philips (or NXP) NXP Wireless Device
```

☞ The USB product ID changes from `0x0214` to `0x0215` after loading the firmware.

2. Use the following command to load the Wi-Fi driver and firmware:

```
root@imx8mqevk:~# modprobe moal mod_para=nxp/wifi_mod_para.conf
```

The Wi-Fi driver parameters are configured in the `/lib/firmware/nxp/wifi_mod_para.conf` file in a chipset-specific block for MAYA-W4:

```
USBW610 = {
        cfg80211_wext=0xf
        max_vir_bss=1
        cal_data_cfg=none
        ps_mode=1
        auto_ds=1
        host_mlme=1
        fw_name=nxp/usbusbspi_iw610.bin.se
}
```

In this configuration, the Wi-Fi driver downloads combo-firmware for Wi-Fi, Bluetooth, and 802.15.4 to the module. Other firmware options for the USB-USB-SPI host interface configuration are shown in Table 20.

Firmware image	Description
usbusbspi_iw610.bin.se	Combo-firmware for Wi-Fi (USB), Bluetooth (USB), and 802.15.4 (SPI)
usbusb_iw610.bin.se	Combo-firmware for Wi-Fi (USB) and Bluetooth (USB)

Table 20: USB-USB-SPI firmware images

3. Use the following command to search and display the Wi-Fi driver and firmware versions:

```
root@imx8mqevk:~# cat /proc/mwlan/adapter0/mlan0/info | grep version
driver_version = USBIW610--18.99.5.p53-MM6X18505.p20-(FP92)
firmware_major_version=18.99.5
```

5.4.1.3 Verify Wi-Fi network interfaces

You can use the `iw dev` command to list and verify the available Wi-Fi network interfaces, as shown in the following excerpt:

```
root@imx8mqevk:~# iw dev
phy#0
        Interface wfd0
                addr ba:f4:4f:a5:6d:a1
                type managed
        Interface uap0
                addr ba:f4:4f:a5:6e:a1
                type AP
        Interface mlan0
                addr b8:f4:4f:a5:6d:a1
                type managed
```

Table 21 describes the functions of the Wi-Fi interfaces.

Interface	Function
mlan0	Network interface for station mode functionality. Typically used with wpa_supplicant.
uap0	Network interface for access-point functionality. Typically used with hostapd.
wfd0	Network interface for P2P functionality. Can operate in both group owner (GO) and group client (GC) modes.

Table 21: Wi-Fi network interfaces

5.4.2 Bluetooth interface

You bring up the Bluetooth HCI UART interface using the NXP Bluetooth UART driver (`btnxpuart`) or the standard Linux HCI UART driver (`hci_uart`). The Bluetooth USB interface is supported by the NXP Bluetooth USB driver.

5.4.2.1 Using the NXP Bluetooth UART driver

The `btnxpuart` driver is available in the i.MX Linux BSP L6.1.22 and later. It supports a power-save feature that automatically puts the chip into a sleep state when idle.

To use the NXP Bluetooth UART driver, add a `bluetooth` sub node with a device compatibility string to the attached UART node in the device-tree file:

```
&uart1 {
    bluetooth {
          compatibility = "nxp,88w8987-bt";
          fw-init-baudrate = <115200>;
    };
};
```

The Wi-Fi driver must be loaded first, with either Wi-Fi standalone or combo firmware, before loading the NXP Bluetooth UART driver. The `btnxpuart` driver takes care of downloading the Bluetooth standalone firmware if required.

To load the NXP Bluetooth UART driver, enter the following command:

```
root@imx8mqevk:~# modprobe btnxpuart
```

☞ The `btnxpuart` driver automatically changes the UART baud rate to 3 Mbaud after the firmware is downloaded.

5.4.2.2 Using the Linux HCI UART driver

To bring up the Bluetooth interface using the Linux HCI UART driver:

4. Download the firmware as combo-firmware by loading the Wi-Fi driver first, or as Bluetooth standalone firmware through the UART interface using a firmware loader tool.
5. Load the Linux HCI UART driver and attach the serial device for the HCI UART interface to the Linux BlueZ stack (using `/dev/ttyUSB0` as example):

   ```
   root@imx8mqevk:~# modprobe hci_uart
   root@imx8mqevk:~# hciattach /dev/ttyUSB0 any 115200 flow
   root@imx8mqevk:~# hciconfig hci0 up
   ```

6. Using the `hciconfig` command from BlueZ, verify that the Bluetooth HCI interface is up:

   ```
   hci0: Type: Primary Bus: UART
   BD Address: B8:F4:4F:A5:6D:A0 ACL MTU: 1021:7 SCO MTU: 120:6
   UP RUNNING
   RX bytes:1498 acl:0 sco:0 events:90 errors:0
   TX bytes:1270 acl:0 sco:0 commands:90 errors:0
   ```

7. The host application can change the UART baud rate with a vendor specific HCI command (`OCF 0x0009`). The `command complete` event is transmitted to the host at the old baud rate. After this, the host can switch to the new baud rate and then wait for 5 ms or more before sending the next command. HCI command syntax using `hcitool`:

   ```
   hcitool -i hci0 cmd 0x3f 0x0009 <4-byte little-endian value for baud rate>
   ```

   For example, enter the following commands to change the baud rate to 3 Mbaud:

   ```
   root@imx8mqevk:~# hcitool -i hci0 cmd 0x3f 0x0009 0xc0 0xc6 0x2d 0x00
   root@imx8mqevk:~# killall hciattach
   root@imx8mqevk:~# hciattach /dev/ttyUSB0 any 3000000 flow
   root@imx8mqevk:~# hciconfig hci0 up
   ```

5.4.2.3 Using the NXP Bluetooth USB driver

To bring up the Bluetooth interface using the NXP Bluetooth USB driver:

1. Download the firmware as combo-firmware by loading the Wi-Fi driver first. If the firmware is not already running, the Bluetooth USB driver will try to download the firmware itself. The firmware name can be set with the `fw_name` driver module parameter.
2. Load the NXP Bluetooth USB driver:

```
root@imx8mqevk:~# modprobe btxxx
```

3. Using the `hciconfig` command from BlueZ, verify that the Bluetooth HCI interface is up:

```
hci0:   Type: Primary  Bus: USB
        BD Address: B8:F4:4F:A5:6D:A0  ACL MTU: 256:6  SCO MTU: 0:0
        UP RUNNING
        RX bytes:285 acl:0 sco:0 events:26 errors:0
        TX bytes:364 acl:0 sco:0 commands:57 errors:0
```

5.4.3 Creating a Thread network using the 802.15.4 radio

SPI communication protocol is used to interface between the host and the MAYA-W4 module. NXP provides pre-compiled OpenThread tools and SPI driver utility to establish the communication between i.MX 8M Mini and the MAYA-W4 module.

To create a Thread network with MAYA-W4 on the NXP i.MX 8M Mini platform using the open-source OpenThread stack [18]:

1. Copy the pre-compiled OpenThread tools to the host platform and check they have executable permission. Pre-compiled OpenThread tools include `ot-ctl`, `ot-daemon`, and `spi-hdlc-adapter`.
2. The NXP software package includes an SPI device tree file for the i.MX 8M Mini platform. Copy the SPI device tree file to the host platform and reboot the system.

```
root@imx8mmevk:~# cp <latest-IW610x-sw-package/OT-Tools-LNX-X_X_X-IMX8>/imx8mm-evk-
   xxx.dtb /run/media/mmcblk2p1/imx8mm-evk.dtb
root@imx8mmevk:~# reboot
```

3. Download the firmware to the MAYA-W4 module. The combo firmware downloaded through the Wi-Fi driver includes the 802.15.4 radio firmware.

```
root@imx8mmevk:~# modprobe moal mod_para=nxp/wifi_mod_para.conf
```

4. Start OpenThread `ot-daemon` in the background.

```
root@imx8mmevk:~# ot-daemon "spinel+spi:///dev/spidev1.0?gpio-int-
   device=/dev/gpiochip5&gpio-int-line=12&gpio-reset-device=/dev/gpiochip5&gpio-reset-
   line=14&spi-mode=0&spi-speed=1000000&spi-reset-delay=500" &
```

The SPI command parameters are described in Table 22.

Parameter	Description
spinel+spi://	Path to the SPI interface
gpio-int-device	Path to the Linux sysfs-exported GPIO device with the SPI interrupt signal (**SPI_INT**)
gpio-int-line	The offset index of the SPI interrupt signal (**SPI_INT**) in the GPIO device
gpio-reset-device	Path to the Linux sysfs-exported GPIO device with the 802.15.4 reset signal (**IND_RST_NB**)
gpio-reset-line	The offset index of the 802.15.4 reset signal (**IND_RST_NB**) in the GPIO device
spi-mode	SPI mode to use (0-3)
spi-speed	SPI speed in Hertz (max. 10 MHz)

Parameter	Description
spi-reset-delay	The delay after "RESET" assertion, in milliseconds

Table 22: SPI command parameters

5. Create a Thread network on MAYA-W4 and check the device state is set to "leader", as described in Starting a Thread network and verifying the device state.
   Create a Thread network on the remote device and check the device state is set to "child", as described in Starting a Thread network and verifying the device state. Note that the initial remote device state is set to leader until its status is accepted by the parent device, MAYA-W4.

```
root@imx8mmevk:~# ot-ctl state
Child
Done
```

6. Verify the assigned mesh-local addresses on MAYA-W4 (device A) and remote device B:

```
root@imx8mmevk:~# ot-ctl ipaddr
fdc0:de7a:b5c0:0:0:ff:fe00:0c01        # Routing Locator (RLOC)
fdc0:de7a:b5c0:0:66bf:99b9:24c0:d55f   # Mesh-Local EID (ML-EID)
fe80:0:0:0:18e5:29b3:a638:943b         # Link-Local Address (LLA)
Done
```

7. Ping the child device using the mesh-local address:

```
root@imx8mmevk:~# ot-ctl ping fdc0:de7a:b5c0:0:66bf:99b9:24c0:d55f
16 bytes from fdc0:de7a:b5c0:0:66bf:99b9:24c0:d55f icmp_seq=1 hlim=64 time=17ms
```

8. To run a throughput test using `iperf3` and mesh-local addresses.
   - Start iperf3 server on device A:

```
root@imx8mmevk:~# iperf -s -u -i 1 -w 400k -p 5005 -V -B <mesh-local-addr-A>
```

   - Start iperf3 client on device B:

```
root@imx8mmevk:~# iperf -c <mesh-local-addr-A> -B <mesh-local-addr-B> -u -b 250k -l
   500 -V -i 1 -t 20 -p 5005
```

For more information about the OpenThread application features, see the OpenThread web page [18].
For more information about the OpenThread setup with MAYA-W4, contact your local support team.

5.4.3.1 Creating a Thread network

The OpenThread Command Line Interface (CLI) exposes configuration and management APIs. It allows users to issue commands and interact with OpenThread devices.

1. Stop any existing Thread network and apply a factory reset on 802.15.4 radio:

```
root@imx8mmevk:~# ot-ctl thread stop
Done
root@imx8mmevk:~# ot-ctl ifconfig down
Done
root@imx8mmevk:~# ot-ctl factoryreset
Done
```

2. Initialize a new operational dataset (leader only):

```
root@imx8mmevk:~# ot-ctl dataset init new
Done
```

3. Set the channel of operation:

```
root@imx8mmevk:~# ot-ctl channel 26
Done
```

4. Set the `networkkey` for the network:

```
root@imx8mmevk:~# ot-ctl networkkey 00112233445566778899aabbccddeeff
Done
```

5. Commit the active dataset:

```
root@imx8mmevk:~# ot-ctl commit active
Done
```

5.4.3.2 Starting a Thread network and verifying the device state

To start the Thread network and verify the state of the device:

1. Bring up the network interface:

```
root@imx8mmevk:/usr/sbin# ot-ctl ifconfig up
Done
```

2. Start the Thread network:

```
root@imx8mmevk:/usr/sbin# ot-ctl thread start
Done
```

3. Check the current state of the device:

```
root@imx8mmevk:/usr/sbin# ot-ctl thread state
leader
Done
```

5.5 Configuring antenna diversity

You enable/disable and configure the software antenna diversity feature from the command line interface (CLI) through the configuration file `/proc/mwlan/adapter0/config`.

Check the antenna configuration status

Read the `antcfg` parameter in the configuration file to retrieve information about the current antenna diversity configuration:

```
cat /proc/mwlan/adapter0/config | grep antcfg
```

The current `antcfg` setting defines the status. For example, the following response is returned if antenna diversity software is enabled:

```
antcfg=0xffff 6000 1
```

The following response is returned if the configuration is set to one antenna:

```
antcfg=0x1
```

Enable TX/RX software antenna diversity

To enable TX/RX software antenna diversity with the default evaluation time interval, enter:

```
echo "antcfg=0xffff" > /proc/mwlan/adapter0/config
```

The evaluation time interval can be optionally configured. The default time interval is 6 s (0x1770 ms). To enable TX/RX software antenna diversity and set the evaluation time interval to 6 seconds, enter:

```
echo "antcfg=0xffff 0x1770" > /proc/mwlan/adapter0/config
```

☞ TX/RX software antenna diversity is only supported in Wi-Fi STA mode.

Disable TX/RX software antenna diversity

To disable TX/RX software antenna diversity and set the antenna configuration to antenna 1, enter:

```
echo "antcfg=1" > /proc/mwlan/adapter0/config
```

5.6 Usage examples

The Wi-Fi and Bluetooth features and configurations for NXP-based wireless modules on i.MX Linux host platforms are described in the NXP User Manual UM11490 [14]. The document covers the initialization and configuration of the Wi-Fi and Bluetooth interfaces. It is applicable for MAYA-W4 series on i.MX 8 family NXP host processors and other NXP-based wireless modules.

The Wi-Fi features demonstrated in the NXP User Manual [14] are configured with the open source `wpa_supplicant/hostapd` and Linux utilities. The features include scanning for nearby access points, connecting to an access point, configuring the device as an access point, Wi-Fi security, Wi-Fi Direct, and throughput testing using the iperf utility.

The Bluetooth features utilize the Linux BlueZ host stack and comprise:

- Scanning
- Pairing
- Bluetooth LE device connection
- Bluetooth LE device GATT server operation

Guidelines for enabling driver debug logging are also provided.

For instructions describing the use of radio test mode for regulatory compliance and RF performance testing, see Radio testing.

6 Handling and soldering

⚠ MAYA-W4 series modules are Electrostatic Sensitive Devices that demand the observance of special handling precautions against static damage. Failure to observe these precautions can result in severe damage to the product.

6.1 ESD handling precautions

As the risk of electrostatic discharge in the RF transceivers and patch antennas of the module is of particular concern, standard ESD safety practices are prerequisite. See also Figure 16.

Consider also:

- When connecting test equipment or any other electronics to the module (as a standalone or PCB-mounted device), the first point of contact must always be to local GND.
- Before mounting a patch antenna, connect the device to ground.
- When handling the RF pin, do not touch any charged capacitors. Be especially careful when handling materials like patch antennas (~10 pF), coaxial cables (~50-80 pF/m), soldering irons, or any other materials that can develop charges.
- To prevent electrostatic discharge through the RF input, do not touch any exposed antenna area. If there is any risk of the exposed antenna being touched in an unprotected ESD work area, be sure to implement proper ESD protection measures in the design.
- When soldering RF connectors and patch antennas to the RF pin on the receiver, be sure to use an ESD-safe soldering iron (tip).

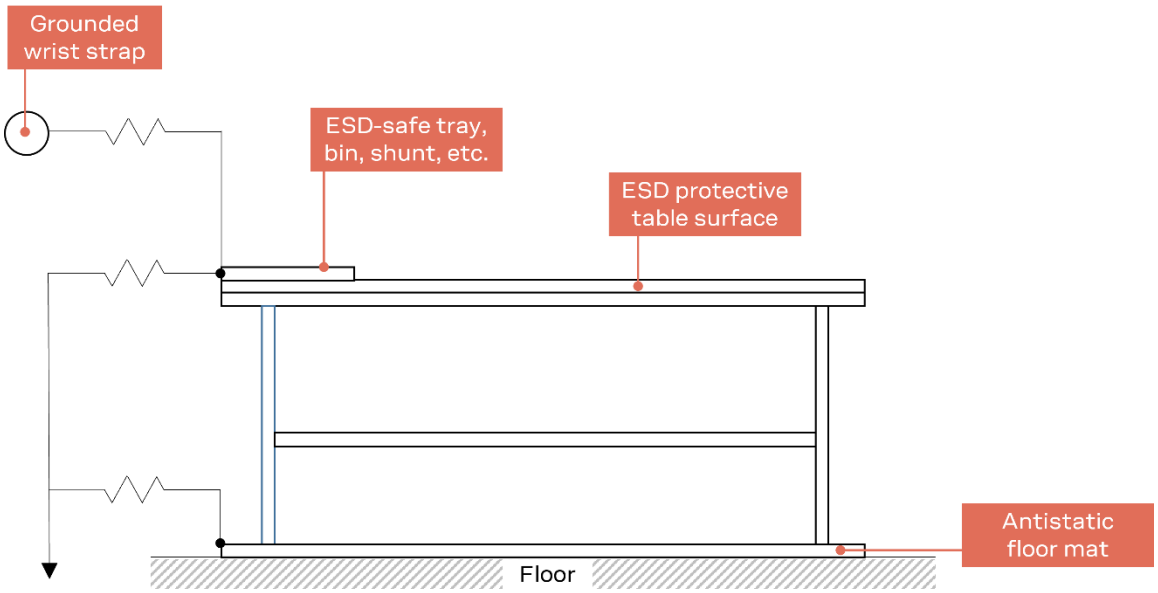

Figure 16: Standard workstation setup for safe handling of ESD-sensitive devices

6.2 Packaging, shipping, storage, and moisture preconditioning

For information pertaining to reels, tapes, or trays, moisture sensitivity levels (MSL), storage, shipment, and drying preconditioning, see the MAYA-W4 series data sheet [1] and the Product packaging guide [2].

6.3 Reflow soldering process

MAYA-W4 modules are surface mounted devices supplied on a multi-layer FR4-type PCB with gold-plated connection pads. The modules are produced in a lead-free process using lead-free soldering paste. The thickness of solder resist between the host PCB top side and the bottom side of the MAYA-W4 module must be considered for the soldering process.

MAYA-W4 modules are compatible with industrial reflow profile for RoHS solders, and “no-clean” soldering paste is strongly recommended.

The reflow profile used is dependent on the thermal mass of the entire populated PCB, the heat transfer efficiency of the oven, and the type of solder paste that is used. The optimal soldering profile must be trimmed for the specific process and PCB layout.

A vacuum reflow process is not recommended to use for MAYA-W4 modules.

⚠ The target values shown in Table 23 and Figure 17 are given as general guidelines for a Pb-free process only. For further information, see also the JEDEC J-STD-020E [7] standard.

Process parameter		Unit	Target
Pre-heat	Ramp up rate to T_{SMIN}	K/s	3
	T_{SMIN}	°C	150
	T_{SMAX}	°C	200
	t_S (from 25°C)	s	150
	t_S (Pre-heat)	s	110
Peak	T_L	°C	217
	t_L (time above T_L)	s	90
	T_P	°C	245-250
	t_P (time above T_P -5°C)	s	30
Cooling	Ramp-down from T_L (max)	K/s	6
General	$T_{to\ peak}$	s	300
	Allowed reflow soldering cycles	-	See the MAYA-W4 series data sheet [1]

Table 23: Recommended reflow profile

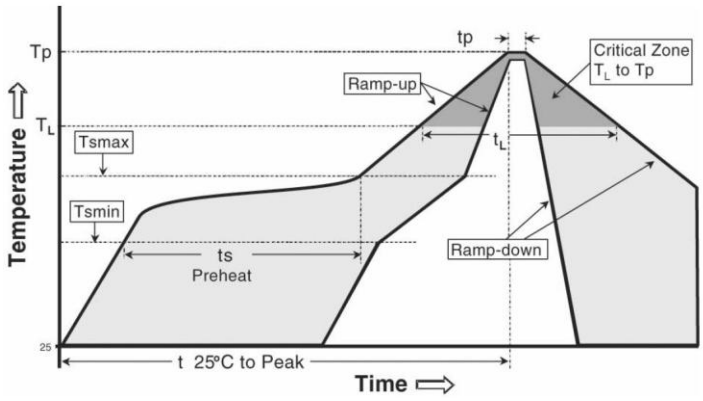

Figure 17: Reflow profile

☞ The lower value of T_P and slower ramp down rate is preferred.

6.3.1 Cleaning

Cleaning the modules is not recommended. Residues underneath the modules cannot be easily removed with a washing process.

- Cleaning with water will lead to capillary effects where water is absorbed in the gap between the baseboard and the module. The combination of residues of soldering flux and encapsulated water leads to short circuits or resistor-like interconnections between neighboring pins. Water will also damage the sticker and the inkjet printed text.
- Cleaning with alcohol or other organic solvents can result in soldering flux residues flooding into areas that are not accessible for post-wash inspections. The solvent will also damage the label and the ink-jet printed text.
- Ultrasonic cleaning will permanently damage the module and the crystal oscillators in particular. For best results use a “no clean” soldering paste and circumvent the need for a cleaning stage after the soldering process.

6.3.2 Other notes

- Boards with combined through-hole technology (THT) components and surface-mount technology (SMT) devices may require wave soldering to solder the THT components. Only a single wave-soldering process is allowed for boards populated with the modules. Miniature Wave Selective Solder processes are preferred over traditional wave soldering processes.
- Hand-soldering is not recommended.
- Rework is not recommended.
- Conformal coating can affect the performance of the module, which means that it is important to prevent the liquid from flowing into the module. The RF shields do not provide protection for the module from coating liquids with low viscosity; therefore, care is required while applying the coating. Conformal coating of the module will void the warranty.
- Grounding metal covers: Attempts to improve grounding by soldering ground cables, wick, or other forms of metal strips directly onto the EMI covers is done so at the customer’s own risk and will void the module warranty. The numerous ground pins on the module are adequate to provide optimal immunity to interferences.
- The modules contain components which are sensitive to Ultrasonic Waves. Use of any Ultrasonic Processes (cleaning, welding, etc.) may damage the module. The use of ultrasonic processes together with the module will void the warranty.

7 Regulatory compliance

7.1 General requirements

MAYA-W4 series modules are designed to comply with the regulatory demands of Federal Communications Commission (FCC), Innovation, Science and Economic Development Canada (ISED)[12] and the CE mark. This chapter contains instructions on the process needed for an integrator when including the MAYA-W4 module into an end-product.

- Any deviation from the process described can cause the MAYA-W4 series module not to comply with the regulatory authorizations of the module and thus void the user's authority to operate the equipment.
- Any changes to hardware, hosts, or co-location configuration might require new radiated emission and SAR evaluation and/or testing.
- The regulatory compliance of MAYA-W4 does not exempt the end-product from being evaluated against applicable regulatory demands; for example, FCC Part 15B criteria for unintentional radiators [9].
- The end-product manufacturer must follow all the engineering and operating guidelines, as specified by the grantee (u-blox).
- MAYA-W4 is for OEM integrators only.
- Only authorized antenna(s) may be used. For the list of authorized antennas, see Approved antennas In the end-product, the MAYA-W4 module must be installed in such a way that only authorized antennas can be used.
- The end-product must use the specified antenna trace reference design, as described in the MAYA-W4 antenna reference design application note [17].
- Any notification to the end user about how to install or remove the integrated radio module is NOT allowed.

⚠ If these conditions can't be met or any of the operating instructions are violated, the u-blox regulatory authorization will be considered invalid. Under these circumstances, the integrator is responsible to re-evaluate the end-product including the MAYA-W4 series module and obtain their own regulatory authorization, or u-blox may be able to support updates of the u-blox regulatory authorization. See also Antenna requirements.

7.1 European Union regulatory compliance

MAYA-W4 series modules comply with the essential requirements and other relevant provisions of Radio Equipment Directive (RED) 2014/53/EU.

For information about the regulatory compliance of MAYA-W4 series modules against requirements and provisions in the European Union, see the MAYA-W4 Declaration of Conformity [21].

7.1.1 CE End-product regulatory compliance

7.1.1.1 Safety standard

In order to fulfill the safety standard EN 62368-1 [8], the MAYA-W4 module must be supplied with a Class-2 Limited Power Source.

[12] Formerly known as IC (Industry Canada).

7.1.2 CE Equipment classes

In accordance with Article 1 of Commission Decision 2000/299/EC[13], MAYA-W4 is defined as either Class-1 or Class-2 radio equipment, the end-product integrating MAYA-W4 inherits the equipment class of the module.

☞ For guidance on end product marking in according with RED, see http://ec.europa.eu/

☞ Operation in the band 5150 - 5350 MHz is only for indoor use to reduce the potential for harmful interference.

⚠ The EIRP of the MAYA-W4 module must not exceed the limits of the regulatory domain that the module operates in. Depending on the host platform implementation and antenna gain, integrators have to limit the maximum output power of the module through the host software. For information about the corresponding maximum transmit power levels of Approved antennas.

7.2 Great Britain regulatory compliance

For information about the regulatory compliance of MAYA-W4 series modules against requirements and provisions in Great Britain, see also the MAYA-W4 UKCA Declaration of Conformity [20].

7.2.1 UK Conformity Assessed (UKCA)

☞ The United Kingdom is made up of the Great Britain (including England, Scotland, and Wales) and the Northern Ireland. Northern Ireland continues to accept the CE marking. The following notice is applicable to Great Britain only.

MAYA-W4 series modules have been evaluated against the essential requirements of the Radio Equipment Regulations 2017 (SI 2017 No. 1206, as amended by SI 2019 No. 696).

For guidance on end product marking in accordance with UKCA, see https://www.gov.uk/guidance/using-the-ukca-marking.

7.3 United states/Canada End-product regulatory compliance

u-blox represents that the modular transmitter fulfills the FCC/ISED regulations when operating in authorized modes on any host product given that the integrator follows the instructions as described in this document. Accordingly, the host product manufacturer acknowledges that all host products referring to the FCC ID or ISED certification number of the modular transmitter and placed on the market by the host product manufacturer need to fulfil all of the requirements mentioned below. Non-compliance with these requirements may result in revocation of the FCC approval and removal of the host products from the market. These requirements correspond to questions featured in the FCC guidance for software security requirements for U-NII devices, FCC OET KDB 594280 D02 [16].

⚠ The modular transmitter approval of MAYA-W4, or any other radio module, does not exempt the end product from being evaluated against applicable regulatory demands.

The evaluation of the end product shall be performed with the MAYA-W4 module installed and operating in a way that reflects the intended end product use case. The upper frequency measurement range of the end product evaluation is the 10th harmonic of 5.8 GHz as described in KDB 996369 D04.

[13] 2000/299/EC: Commission Decision of 6 April 2000 establishing the initial classification of radio equipment and telecommunications terminal equipment and associated identifiers.

The following requirements apply to all products that integrate a radio module:

- Subpart B – UNINTENTIONAL RADIATORS
  To verify that the composite device of host and module comply with the requirements of FCC part 15B, the integrator shall perform sufficient measurements using ANSI 63.4-2014.
- Subpart C – INTENTIONAL RADIATORS
  It is required that the integrator carries out sufficient verification measurements using ANSI 63.10-2013 to validate that the fundamental and out-of-band emissions of the transmitter part of the composite device complies with the requirements of FCC part 15C.

When the items listed above are fulfilled, the end product manufacturer can use the authorization procedures as mentioned in Table 1 of 47 CFR Part 15.101, before marketing the end product. This means the customer has to either market the end product under a Suppliers Declaration of Conformity (SdoC) or to certify the product using an accredited test lab.

The description is a subset of the information found in applicable publications of FCC Office of Engineering and Technology (OET) Knowledge Database (KDB). We recommend the integrator to read the complete document of the referenced OET KDB's.

- KDB 178919 D01 Permissive Change Policy
- KDB 447498 D01 General RF Exposure Guidance
- KDB 594280 D01 Configuration Control
- KDB 594280 D02 U-NII Device Security
- KDB 784748 D01 Labelling Part 15 18 Guidelines
- KDB 996369 D01 Module certification Guide
- KDB 996369 D02 Module Q&A
- KDB 996369 D04 Module Integration Guide

7.3.1 United States compliance statement (FCC)

MAYA-W4 series modules have modular approval and comply with FCC 47 CFR Part 15C §15.247 and Part 15E §15.407. Operation is subject to the following two conditions:

- This device may not cause harmful interference, and
- This device must accept any interference received, including interference that may cause undesired operation.

⚠ Any changes or modifications NOT explicitly APPROVED by u-blox could cause the MAYA-W4 series module to cease to comply with FCC rules part 15 thus void the user's authority to operate the equipment.

⚠ MAYA-W4 series modular transmitter is only FCC authorized for the specific rule parts listed on the FCC grant. The host product manufacturer is responsible for compliance to any other FCC rules that apply to the host not covered by the modular transmitter grant of certification.

The internal / external antenna(s) used for this module must provide a separation distance of at least 20 cm from all persons and must not be co-located or operating in conjunction with any other antenna or transmitter.

Table 24 shows the FCC IDs allocated to MAYA-W4 series modules.

Model[14]	FCC ID
MAYA-W476-00B	XPYMAYAW4A
MAYA-W466-00B	XPYMAYAW4A
MAYA-W446-00B	XPYMAYAW4A
MAYA-W436-00B	XPYMAYAW4A
MAYA-W473-00B	XPYMAYAW4A
MAYA-W463-00B	XPYMAYAW4A
MAYA-W443-00B	XPYMAYAW4A
MAYA-W433-00B	XPYMAYAW4A
MAYA-W472-00B	XPYMAYAW4A
MAYA-W462-00B	XPYMAYAW4A
MAYA-W442-00B	XPYMAYAW4A
MAYA-W432-00B	XPYMAYAW4A
MAYA-W471-00B	XPYMAYAW4A
MAYA-W461-00B	XPYMAYAW4A
MAYA-W441-00B	XPYMAYAW4A
MAYA-W431-00B	XPYMAYAW4A
MAYA-W476-10B	XPYMAYAW4A
MAYA-W466-10B	XPYMAYAW4A
MAYA-W446-10B	XPYMAYAW4A
MAYA-W436-10B	XPYMAYAW4A
MAYA-W473-10B	XPYMAYAW4A
MAYA-W463-10B	XPYMAYAW4A
MAYA-W443-10B	XPYMAYAW4A
MAYA-W433-10B	XPYMAYAW4A

Table 24: FCC IDs for different variants of MAYA-W4 series modules

For FCC end-product labeling requirements, see End product labeling requirements.

7.3.2 Canada compliance statement (ISED)

MAYA-W4 series modules are certified for use in accordance with the Canada Innovation, Science and Economic Development Canada (ISED) Radio Standards Specification (RSS) RSS-247 Issue 2 and RSS-Gen. Table 25 shows the ISED certification IDs allocated to MAYA-W4 series modules.

Model	ISED certification ID
MAYA-W476-00B	8595A-MAYAW4A
MAYA-W466-00B	8595A-MAYAW4A
MAYA-W446-00B	8595A-MAYAW4A
MAYA-W436-00B	8595A-MAYAW4A
MAYA-W473-00B	8595A-MAYAW4A
MAYA-W463-00B	8595A-MAYAW4A
MAYA-W443-00B	8595A-MAYAW4A
MAYA-W433-00B	8595A-MAYAW4A

[14] The model name is identical to the ordering code. For details, see the MAYA-W4 data sheet [1].

MAYA-W472-00B	8595A-MAYAW4A
MAYA-W462-00B	8595A-MAYAW4A
MAYA-W442-00B	8595A-MAYAW4A
MAYA-W432-00B	8595A-MAYAW4A
MAYA-W471-00B	8595A-MAYAW4A
MAYA-W461-00B	8595A-MAYAW4A
MAYA-W441-00B	8595A-MAYAW4A
MAYA-W431-00B	8595A-MAYAW4A
MAYA-W476-10B	8595A-MAYAW4A
MAYA-W466-10B	8595A-MAYAW4A
MAYA-W446-10B	8595A-MAYAW4A
MAYA-W436-10B	8595A-MAYAW4A
MAYA-W473-10B	8595A-MAYAW4A
MAYA-W463-10B	8595A-MAYAW4A
MAYA-W443-10B	8595A-MAYAW4A
MAYA-W433-10B	8595A-MAYAW4A

Table 25: ISED IDs for different variants of MAYA-W4 series modules

Operation is subject to the following two conditions:

1. This device may not cause interference, and
2. This device must accept any interference, including interference that may cause undesired operation of the device.

☞ Any notification to the end user of installation or removal instructions about the integrated radio module is NOT allowed. Unauthorized modification could void authority to use this equipment.

This equipment complies with ISED RSS-102 radiation exposure limits set forth for an uncontrolled environment. This equipment should be installed and operated with minimum distance 20 cm between the radiator and your body.

This radio transmitter IC: 8595A-MAYAW4A has been approved by ISED to operate with the antenna types listed in Approved antennas with the maximum permissible gain indicated. Antenna types not included in this list, having a gain greater than the maximum gain indicated for that type, are strictly prohibited for use with this device.

☞ Operation in the band 5150–5250 MHz is only for indoor use to reduce the potential for harmful interference to co-channel mobile satellite systems.

☞ Operation in the 5600-5650 MHz band is not allowed in Canada. High-power radars are allocated as primary users (i.e., priority users) of the bands 5250-5350 MHz and 5650-5850 MHz and that these radars could cause interference and/or damage to LE-LAN devices.

Le présent appareil est conforme aux CNR d'ISED applicables aux appareils radio exempts de licence. L'exploitation est autorisée aux deux conditions suivantes :

(1) l'appareil ne doit pas produire de brouillage, et

(2) l'utilisateur de l'appareil doit accepter tout brouillage radioélectrique subi, même si le brouillage est susceptible d'en compromettre le fonctionnement.

Cet équipement est conforme aux limites d'exposition de rayonnement d'ISED RSS-102 déterminées pour un environnement non contrôlé. Cet équipement devrait être installé et actionné avec la distance minimum 20 cm entre le radiateur et votre corps.

Cet émetteur radio, IC: 8595A-MAYA-W4A été approuvé par ISED pour fonctionner avec les types d'antenne énumérés dans la section Approved antennas avec le gain maximum autorisé et l'impédance nécessaire pour chaque type d'antenne indiqué. Les types d'antenne ne figurant pas dans cette liste et ayant un gain supérieur au gain maximum indiqué pour ce type-là sont strictement interdits d'utilisation avec cet appareil.

☞ Le dispositif de fonctionnement dans la bande 5150-5250 MHz est réservé à une utilisation en intérieur pour réduire le risque d'interférences nuisibles à la co-canal systèmes mobiles par satellite.

☞ Opération dans la bande 5600-5650 MHz n'est pas autorisée au Canada. Haute puissance radars sont désignés comme utilisateurs principaux (c.-à utilisateurs prioritaires) des bandes 5250-5350 MHz et 5650-5850 MHz et que ces radars pourraient causer des interférences et / ou des dommages à dispositifs LAN-EL.

The internal / external antenna(s) used for this module must provide a separation distance of at least 20 cm from all persons and must not be co-located or operating in conjunction with any other antenna or transmitter.

For ISED end-product labeling requirements, see End product labeling requirements.

☞ The approval type for all MAYA-W4 series variants is a single modular approval. Due to ISED Modular Approval Requirements (Source: RSP-100 Issue 10), any application which includes the module must be approved by the module manufacturer (u-blox). The application manufacturer must provide design data for the review procedure.

7.3.3 Referring to the u-blox FCC/ISED certification ID

If the General requirements, United states/Canada End-product regulatory compliance and all Antenna requirements are met, the u-blox modular FCC/ISED regulatory authorization is valid and the end-product may refer to the u-blox FCC ID and ISED certification number. u-blox may be able to support updates to the u-blox regulatory authorization by adding new antennas to the u-blox authorization for example. See also Antenna requirements.

⚠ To use the u-blox FCC / ISED grant and refer to the u-blox FCC ID / ISED certification ID, the integrator must confirm with u-blox that all requirements associated with the Configuration control and software security of end-products are fulfilled.

7.3.4 Obtaining own FCC/ISED certification ID

Integrators who do not want to refer to the u-blox FCC/ISED certification ID, or who do not fulfil all requirements to do so may instead obtain their own certification. With their own certification, the integrator has full control of the grant to make changes.

Integrators who want to base their own certification on the u-blox certification can do so via a process called "Change in ID" (FCC) / "Multiple listing" (ISED). With this, the integrator becomes the grantee of a copy of the u-blox FCC/ISED certification. u-blox will support with an approval letter that shall be filed as a Cover Letter exhibit with the application.

☞ For modules where the FCC ID / ISED certification ID is printed on the label, the integrator must replace the module label with a new label containing the new FCC/ISED ID. For a description of the labeling requirements, see also End product labeling requirements.

⚠ It is the responsibility of the integrator to comply with any upcoming regulatory requirements.

7.3.5 Antenna requirements

In addition to the general requirement to use only authorized antennas, the u-blox grant also requires a separation distance of at least 20 cm from the antenna(s) to all persons. The antenna(s) must not be co-located with any other antenna or transmitter (simultaneous transmission) as well. If this cannot be met, a Permissive Change as described below must be made to the grant.

☞ To support verification activities that may be required by certification laboratories, customers applying for Class-II Permissive changes must implement the setup described in Radio testing.

7.3.5.1 Separation distance

If the required separation distance of 20 cm cannot be fulfilled, a SAR evaluation must be performed. This consists of additional calculations and/or measurements. The result must be added to the grant file as a Class II Permissive Change.

7.3.5.2 Co-location (simultaneous transmission)

If the module is to be co-located with another transmitter, additional measurements for simultaneous transmission are required. The results must be added to the grant file as a Class II Permissive Change.

7.3.5.3 Adding a new antenna for authorization

If the authorized antennas and/or antenna trace design cannot be used, the new antenna and/or antenna trace designs must be added to the grant file. This is done by a Class I Permissive Change or a Class II Permissive Change, depending on the specific antenna and antenna trace design.

- Antennas of the same type and with less or same gain as those included in the list of Approved antennas can be added under a Class I Permissive Change.
- Antenna trace designs deviating from the u-blox reference design and new antenna types are added under a Class II Permissive Change.
- For 5 GHz modules, the combined minimum gain of antenna trace and antenna must be greater than 0 dBi to comply with DFS testing requirements.

⚠ Integrators intending to refer to the u-blox FCC ID / ISED certification ID must contact their local support team to discuss the Permissive Change Process. Class II Permissive Changes are subject to NRE costs.

7.3.6 Configuration control and software security of end-products

☞ “Modular transmitter” hereafter refers to MAYA-W4 modules with FCC IDs listed in Table 24.

As the end-product must comply with the requirements addressed by the OET KDB 594280 [15], the host product integrating the MAYA-W4 must comply with the following requirements:

- Upon request from u-blox, the host product manufacturer will provide all of the necessary information and documentation to demonstrate how the requirements listed below are met.
- The host product manufacturer will not modify the modular transmitter hardware.

- The configuration of the modular transmitter when installed into the host product must be within the authorization of the modular transmitter at all times and cannot be changed to include unauthorized modes of operation through accessible interfaces of the host product. The instructions for Configuration of TX power limits and energy detection must be followed. In particular, the modular transmitter installed in the host product will not have the capability to operate on the operating channels/frequencies referred to in the section(s) below, namely one or several of the following channels: 12 (2467 MHz), 13 (2472 MHz), 120 (5600 MHz), 124 (5620 MHz), and 128 (5640 MHz). The channels 12 (2467 MHz), 13 (2472 MHz), 120 (5600 MHz), 124 (5620 MHz), and 128 (5640 MHz) are allowed to be used only for modules that are certified for the usage ("modular transmitter"). Customers must verify that the module in use is certified as supporting DFS client/master functionality.
- The host product uses only authorized firmware images provided by u-blox and/or by the manufacturer of the RF chipset used inside the modular transmitter.
- The configuration of the modular transmitter must always follow the requirements specified in Operating frequencies and cannot be changed to include unauthorized modes of operation through accessible interfaces of the host product.
- The modular transmitter must, when installed into the host product, have a regional setting that is compliant with authorized US modes and the host product is protected from being modified by third parties to configure unauthorized modes of operation for the modular transmitter, including the country code.
- The host product into which the modular transmitter is installed does not provide any interface for the installer to enter configuration parameters into the end product that exceeds those authorized.
- The host product into which the modular transmitter is installed does not provide any interface to third parties to upload any unauthorized firmware images into the modular transmitter and prevents third parties from making unauthorized changes to all or parts of the modular transmitter device driver software and configuration.

☞ OET KDB 594280 D01 [15] lists the topics that must be addressed to ensure that the end-product specific host meets the Configuration Control requirements.

☞ OET KDB 594280 D02 [16] lists the topics that must be addressed to ensure that the end-product specific host meets the Software Security Requirements for U-NII Devices.

7.3.7 Operating frequencies

MAYA-W4 802.11b/g/n/ax operation outside the 2412–2462 MHz band is prohibited in the US and Canada and 802.11a/n/ac/ax operation in the 5600–5650 MHz band is prohibited in Canada. Configuration of the module to operate on channels 12–13 and 120–128 must be prevented accordingly. The channels allowed while operating under the definition of a master or client device[15] are described in Table 26.

[15] 47 CFR §15.202

Channel number	Channel center frequency [MHz]	Master device	Client device	Remarks
1 – 11	2412 – 2462	Yes	Yes	
12 – 13	2467 – 2472	No	No	
36 – 48	5180 – 5240	Yes	Yes	Canada (ISED): Devices are restricted to indoor operation only and the end product must be labelled accordingly.
52 – 64	5260 – 5320	No[16]	Yes	
100 – 116	5500 – 5580	No[16]	Yes	
120 – 128	5600 – 5640	No	No	USA (FCC): Client device operation allowed under KDB 905462
132 – 144	5660 – 5720	No[16]	Yes	
149 – 165	5745 – 5825	Yes	Yes	
169 – 177	5835 - 5885	No[17]	No[17]	Only USA (FCC) indoor operation

Table 26: Allowed channel usage under FCC/ISED regulation

☞ 15.407 (j) Operator Filing Requirement:
Before deploying an aggregate total of more than one thousand outdoor access points within the 5.15–5.25 GHz band, parties must submit a letter to the Commission acknowledging that, should harmful interference to licensed services in this band occur, they will be required to take corrective action. Corrective actions may include reducing power, turning off devices, changing frequency bands, and/or further reducing power radiated in the vertical direction. This material shall be submitted to Laboratory Division, Office of Engineering and Technology, Federal Communications Commission, 7435 Oakland Mills Road, Columbia, MD 21046. Attn: U-NII Coordination, or via Web site at https://www.fcc.gov/labhelp with the subject line: "U-NII-1 Filing".

7.3.8 End product labeling requirements

For an end-product using the MAYA-W4, there must be a label containing, at least, the following information:

This device contains
FCC ID XPYMAYAW4A
IC: 8595A-MAYAW4A

(XYZ) represents the FCC "Grantee Code", this code may consist of Arabic numerals, capital letters, or other characters, the format for this code will be specified by the Commission's Office of Engineering and Technology[18]. (CN) is the Company Number registered at ISED. (UPN) is the Unique Product Number decided by the grant owner.

The label must be affixed on an exterior surface of the end product such that it will be visible upon inspection in compliance with the modular labeling requirements of OET KDB 784748. The host user manual must also contain clear instructions on how end users can find and/or access the FCC ID of the end product.

The label on the MAYA-W4 module containing the original FCC ID acquired by u-blox can be replaced with a new label stating the end-product's FCC/ISED ID in compliance with the modular labeling requirements of OET KDB 784748.

[16] DFS certification is pending.
[17] Certification of U-NII-4 band is pending
[18] 47 CFR 2.926

FCC end product labeling

The outside of final products containing the MAYA-W4 module must display in a user accessible area a label referring to the enclosed module. This exterior label can use wording such as the following: “Contains Transmitter Module FCC ID: XPYMAYAW4A” or “Contains FCC ID: XPYMAYAW4A”.

In accordance with 47 CFR § 15.19, the end product shall bear the following statement in a conspicuous location on the device:

This device complies with Part 15 of the FCC Rules. Operation is subject to the following two conditions: This device may not cause harmful interference, and This device must accept any interference received, including interference that may cause undesired operation.

The following statement must be included in the end-user manual or guide:

Changes or modifications to this unit not expressly approved by the party responsible for compliance could void the user’s authority to operate the equipment. This equipment has been tested and found to comply with the limits for a Class B digital device, pursuant to part 15 of the FCC Rules. These limits are designed to provide reasonable protection against harmful interference in a residential installation. This equipment generates uses and can radiate radio frequency energy and, if not installed and used in accordance with the instructions, may cause harmful interference to radio communications. However, there is no guarantee that interference will not occur in a particular installation. If this equipment does cause harmful interference to radio or television reception, which can be determined by turning the equipment off and on, the user is encouraged to try to correct the interference by one or more of the following measures: • Reorient or relocate the receiving antenna. • Increase the separation between the equipment and receiver. • Connect the equipment into an outlet on a circuit different from that to which the receiver is connected. • Consult the dealer or an experienced radio/TV technician for help.

ISED end product labeling

The ISED certification label of a module shall be clearly visible at all times when installed in the host device; otherwise, the host device must be labeled to display the ISED certification number for the module, preceded by the words “Contains transmitter module”, or the word “Contains”, or similar wording expressing the same meaning, as follows: “Contains transmitter module IC: 8595A-MAYAW4A”.

L’étiquette d’homologation d’ISED d’un module donné doit être posée sur l’appareil hôte à un endroit bien en vue en tout temps. En l’absence d’étiquette, l’appareil hôte doit porter une étiquette sur laquelle figure le numéro d’homologation du module d’ISED, précédé des mots « Contient un module d’émission », ou du mot « Contient », ou d’une formulation similaire allant dans le même sens et qui va comme suit : « Contient le module d’émission IC: 8595A-MAYAW4A ».

The end product shall bear the following statement in both English and French in a conspicuous location on the device:

Operation is subject to the following two conditions: This device may not cause interference, and This device must accept any interference, including interference that may cause undesired operation of the device.
Son utilisation est soumise aux deux conditions suivantes : Cet appareil ne doit pas causer d’interférences et il doit accepter toutes interférences reçues, y compris celles susceptibles d’avoir des effets indésirables sur son fonctionnement.

Labels of end products capable to operate within the band 5150–5250 MHz shall also include:

For indoor use only
Pour usage intérieur seulement

When the device is so small or for such use that it is not practicable to place the statements above on it, the information shall be placed in a prominent location in the instruction manual or pamphlet supplied to the user or, alternatively, shall be placed on the container in which the device is marketed. However, the FCC/ISED ID label must be displayed on the device as described above.

In case, where the final product will be installed in locations where the end-consumer is unable to see the FCC/ISED ID and/or this statement, the FCC/ISED ID and the statement shall also be included in the end-product manual.

7.4 Japan radio equipment compliance

⚠ Pending

7.4.1 Compliance statement

MAYA-W4 series modules comply with the Japanese Technical Regulation Conformity Certification of Specified Radio Equipment (ordinance of MPT N°. 37, 1981), Article 2, Paragraph 1:

- Item (19) “Low power data communications system in the 2.4GHz band (2400-2483.5MHz)”
- Item (19)-3 “Low power data communications system in the 5GHz band”

Japan Indoor Use Statement: The MAYA-W4 series module is restricted on the Japanese market to be used indoors only if the product is operating in the 5.2/5.3 GHz band (W52, W53).

Table 27 shows the Giteki certification IDs allocated to MAYA-W4 series modules.

Model	Giteki ID
MAYA-W4xx	MIC ID: R TBD, MIC ID: T TBD

Table 27: Giteki IDs for different variants of MAYA-W4 series modules

7.4.2 End product labelling requirement

End products based on MAYA-W4 series modules and targeted for distribution in Japan must be affixed with a label with the “Giteki” marking, as shown in Figure 18. The “Indoor use only” information (translated into Japanese below) is mandatory if the product is operating in the 5.2/5.3 GHz band. The marking must be visible for inspection.

MAYA-TBD:

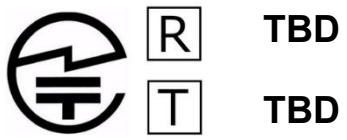

この製品は屋内においてのみ使用可能です

Figure 18: Giteki R and T marks with the MAYA-W4 MIC certification numbers

7.5 Approved antennas

For the specifications that must be fulfilled in the end product that uses radio type approval of the MAYA-W4 module, see the MAYA-W4 antenna reference design application note [17].

The MAYA-W4 antenna reference design application note provides PCB layout details and electrical specifications.

For Bluetooth and Wi-Fi operation in the 2.4 GHz band and Wi-Fi operation in the 5 GHz band, MAYA-W4 has been tested and approved for use with the antennas described in Table 28.

Manufacturer	Part number	Antenna type	Peak gain [dBi] / band		Validated regulatory domain
			2.4 GHz	5 GHz	
Linx Technologies	ANT-DB1-RAF-RPS	Dual-band dipole antenna	4.1	5.1	US/Canada (FCC/ISED) EU/Great Britain (RED/UKCA)
Chang Hong	DA-2458-02-SMR	Dual-band dipole antenna	2.85	2.17	US/Canada (FCC/ISED) EU/Great Britain (RED/UKCA)
TE Connectivity	001-0012	Dual-band dipole antenna	2.0	2.0	US/Canada (FCC/ISED) EU/Great Britain (RED/UKCA)
Taoglas	GW.59.3153	Dual-band dipole antenna	3.8	5.3	US/Canada (FCC/ISED) EU/Great Britain (RED/UKCA)
Laird	MAF94051	Dual-band dipole antenna	2.1	3.4	US/Canada (FCC/ISED) EU/Great Britain (RED/UKCA)
Molex	1461530050	Dual-band PCB patch	3.2	4.25	US/Canada (FCC/ISED) EU/Great Britain (RED/UKCA)
Molex	2042810100	Dual-band PCB patch	2.0	3.3	US/Canada (FCC/ISED) EU/Great Britain (RED/UKCA)
Unictron	H2B1PD1A1C385L	Dual-band PCB patch	2.7	3.5	US/Canada (FCC/ISED) EU/Great Britain (RED/UKCA)
Abracon	u-blox PCB Trace Antenna	PCB antenna on MAYA-W4x6	1.56	-1.74 (U-NII-1) 1.56 (U-NII-2A) -2.23 (U-NII-2C) -0.95 (U-NII-3)	US/Canada (FCC/ISED) EU/Great Britain (RED/UKCA)

Table 28: List of approved antennas

⚠ For compliance with FCC §15.407(a), the EIRP is not allowed to exceed 125 mW (21 dBm) at any elevation angle above 30° (measured from the horizon) when operated as an outdoor access point in U-NII-1 band, 5.150-5.250 GHz.

Table 29 shows the applicable radiated power limits including antenna gain (EIRP) for MAYA-W4.

EIRP limit / band	EU/Great Britain (RED/UKCA)	US/Canada (FCC/ISED)
Wi-Fi 2.4 GHz	20 dBm	30 dBm
Wi-Fi 5 GHz U-NII 1 / 2A / 2C / 3	23 dBm / 23 dBm / 20 dBm / 14 dBm	24 dBm / 24 dBm / 24 dBm / 30 dBm
Bluetooth BR/EDR/BLE	10 dBm	30 dBm
802.15.4	10 dBm	30 dBm

Table 29: Regulatory EIRP limits applicable for MAYA-W4

8 Product testing

8.1 u-blox in-line production testing

As part of our focus on high quality products, u-blox maintain stringent quality controls throughout the production process. This means that all units in our manufacturing facilities are fully tested and that any identified defects are carefully analyzed to improve future production quality.

The Automatic test equipment (ATE) deployed in u-blox production lines logs all production and measurement data – from which a detailed test report for each unit can be generated. Figure 19 shows the ATE typically used during u-blox production.

u-blox in-line production testing includes:

- Digital self-tests (firmware download, MAC address programming)
- Measurement of voltages and currents
- Functional tests (host interface communication)
- Digital I/O tests
- Measurement and calibration of RF characteristics in all supported bands, including RSSI calibration, frequency tuning of reference clock, calibration of transmitter power levels, etc.
- Verification of Wi-Fi and Bluetooth RF characteristics after calibration, like modulation accuracy, power levels, and spectrum, are checked to ensure that all characteristics are within tolerance when the calibration parameters are applied.

Figure 19: Automatic test equipment for module test

8.2 OEM manufacturer production test

As all u-blox products undergo thorough in-series production testing prior to delivery, OEM manufacturers do not need to repeat any firmware tests or measurements that might otherwise be necessary to confirm RF performance. Testing over analog and digital interfaces is also unnecessary during an OEM production test.

OEM manufacturer testing should ideally focus on:

- Module assembly on the device; it should be verified that:
  - Soldering and handling process did not damage the module components
  - All module pins are well soldered on the application board
  - There are no short circuits between pins
- Component assembly on the device; it should be verified that:
  - Communication with host controller can be established
  - The interfaces between module and device are working
  - Overall RF performance test of the device including antenna

In addition to this testing, OEMs can also perform other dedicated tests to check the device. For example, the measurement of module current consumption in a specified operating state can identify a short circuit if the test result deviates that from that taken against a "Golden Device".

The standard operational module firmware and test software on the host can be used to perform functional tests (communication with the host controller, check interfaces) and perform basic RF performance testing. Special manufacturing firmware can also be used to perform more advanced RF performance tests.

8.3 Radio testing

For instructions describing the use of radio test mode, see the NXP application notes about *RF test mode on Linux OS* [22] and *RF test mode on FreeRTOS* [24].

The documents provide an overview of how to enable and use the RF test mode on Linux and RTOS-based hosts. RF test modes are controlled using a simple command line interface and used to set RF parameters for transmit and receive testing for regulatory compliance and RF performance testing. RF test mode is available for use on the production software and supported for the Wi-Fi, Bluetooth, and 802.15.4 radios.

Tx output power limits that meet the u-blox regulatory approvals are provided in Appendix A, Wi-Fi transmit output power limits (pending).

Appendix

A Wi-Fi transmit output power limits (pending)

B Glossary

Abbreviation	Definition
AEC	Automotive Electronics Council
AP	Access Point
API	Application Programming Interface
ATE	Automatic Test Equipment
BT	Bluetooth
CDM	Charged Device Model
CE	European Conformity
CTS	Clear to Send
DC	Direct Current
DDR	Double Data Rate
DFS	Dynamic Frequency Selection
DHCP	Dynamic Host Configuration Interface
EDR	Enhanced Data Rate
EEPROM	Electrically Erasable Programmable Read-Only Memory
EIRP	Equivalent Isotropic Radiated Power
EMI	Electromagnetic Interference
ESD	Electro Static Discharge
ESL	Equivalent Series Inductance
ESR	Equivalent Series Resistance
FCC	Federal Communications Commission
GND	Ground
GPIO	General Purpose Input/Output
HBM	Human Body Model
HS	High-Speed
HCI	Host Controller Interface
ISED	Innovation, Science and Economic Development Canada
I2C	Inter-Integrated Circuit
KDB	Knowledge Database
LAN	Local Area Network
LDO	Low Drop Out
LED	Light-Emitting Diode
LPO	Low Power Oscillator
LTE	Long Term Evolution
MAC	Medium Access Control
MMC	Multi Media Card
MWS	Mobile Wireless Standards
NRE	Non-recurring engineering
NSMD	Non Solder Mask Defined

Abbreviation	Definition
OEM	Original equipment manufacturer
OET	Office of Engineering and Technology
OS	Operating System
PCB	Printed Circuit Board
PCI	Peripheral Component Interconnect
PCIe	PCI Express
PCM	Pulse-code modulation
PHY	Physical layer (of the OSI model)
PMU	Power Management Unit
RF	Radio Frequency
RSDB	Real Simultaneous Dual Band
RST	Request to Send
SDIO	Secure Digital Input Output
SMD	Solder Mask Defined
SMPS	Switching Mode Power Supply
SMT	Surface-Mount Technology
SSID	Service Set Identifier
STA	Station
TBD	To be Decided
THT	Through-Hole Technology
UART	Universal Asynchronous Receiver-Transmitter
VCC	IC power-supply pin
VIO	Input offset voltage
VSDB	Virtual Simultaneous Dual Band
VSWR	Voltage Standing Wave Ratio
WFD	Wi-Fi Direct
WLAN	Wireless local area network
WPA	Wi-Fi Protected Access

Table 30: Explanation of the abbreviations and terms used

Related documents

[1] MAYA-W4 series data sheet, UBXDOC-465451970-3358
[2] Product packaging guide, UBX-14001652
[3] u-blox Limited Use License Agreement, LULA-M
[4] IEC EN 61000-4-2 – Electromagnetic compatibility (EMC) – Part 4-2: Testing and measurement techniques – Electrostatic discharge immunity test
[5] ETSI EN 301 489-1 – Electromagnetic compatibility and Radio spectrum Matters (ERM); ElectroMagnetic Compatibility (EMC) standard for radio equipment and services; Part 1: Common technical requirements
[6] IEC61340-5-1 – Protection of electronic devices from electrostatic phenomena – General requirements
[7] JEDEC J-STD-020E – Moisture/Reflow Sensitivity Classification for Nonhermetic Surface Mount Devices
[8] ETSI: Audio/video, information, and communication technology equipment - Part 1: Safety requirements, IEC 62368-1:2018
[9] FCC Regulatory Information, Title 47 – Telecommunication
[10] JESD51 – Overview of methodology for thermal testing of single semiconductor devices
[11] Antenna Integration application note, UBX-18070466
[12] Embedded Linux for i.MX Applications Processors
[13] MCUXpresso Software Development Kit (SDK)
[14] NXP UM11490, Feature Configuration Guide for NXP-based Wireless Modules on i.MX 8M Quad EVK
[15] FCC guidance 594280 D01 Configuration Control v02 r01,
[16] FCC guidance 594280 D02 U-NII Device Security v01r03
[17] MAYA-W4 antenna reference design application note, UBXDOC-465451970-3866
[18] OpenThread
[19] Thread border router for POSIX-based platforms
[20] UKCA Declaration of Conformity
[21] EU Declaration of Conformity
[22] NXP AN14114, RF Test Mode on Linux OS
[23] MAYA-W4 product summary, UBXDOC-465451970-3565
[24] NXP AN14282, RF Test Mode on FreeRTOS

☞ For product change notifications and regular updates of u-blox documentation, register on our website, www.u-blox.com.

Revision history

Revision	Date	Name	Comments
R01	31-Jan-2025	lber, mzes	Initial release
R02	11-Jun-2025	vbak, mzes, lber	Removed PCM/I2S interface from Figure 1. Updated Software, added USB host interface and Using the NXP Bluetooth USB driver. Added Radio testing.
R03		lber	Leakage current corrected in section USB 2.0 interface.

Contact

u-blox AG

Address: Zürcherstrasse 68
8800 Thalwil
Switzerland

For further support and contact information, visit us at www.u-blox.com/support.