FCC Measurement/Technical Report on

SARA-R520M10

FCC ID: XPYUBX19KM01
IC: 8595A-UBX19KM01

Test Report Reference: MDE_UBLOX_2219_FCC_04

Test Laboratory:
7layers GmbH
Borsigstrasse 11
40880 Ratingen
Germany

Deutsche Akkreditierungsstelle
D-PL-12140-01-01
D-PL-12140-01-02
D-PL-12140-01-03

Note:
The following test results relate only to the devices specified in this document. This report shall not be reproduced in parts without the written approval of the test laboratory.

Table of Contents

1 Applied Standards and Test Summary 3

1.1 Applied Standards 3

1.2 FCC-IC Correlation Table 4

1.3 Measurement Summary 7

2 Revision History / Signatures 8

3 Administrative Data 9

3.1 Testing Laboratory 9

3.2 Project Data 9

3.3 Applicant Data 9

3.4 Manufacturer Data 9

4 Test object Data 10

4.1 General EUT Description 10

4.2 EUT Main components 10

4.3 Ancillary Equipment 10

4.4 Auxiliary Equipment 10

4.5 EUT Setups 11

4.6 Operating Modes / Test Channels 11

4.7 Product labelling 12

5 Test Results 13

5.1 Field strength of spurious radiation 13

5.2 Field strength of spurious radiation 19

5.3 Field strength of spurious radiation 25

6 Test Equipment 33

6.1 Test Equipment Hardware 33

6.2 Test Equipment Software 34

7 Antenna Factors, Cable Loss and Sample Calculations 35

7.1 LISN R&S ESH3-Z5 (150 kHz – 30 MHz) 35

7.2 Antenna R&S HFH2-Z2 (9 kHz – 30 MHz) 36

7.3 Antenna R&S HL562 (30 MHz – 1 GHz) 37

7.4 Antenna R&S HF907 (1 GHz – 18 GHz) 38

7.5 Antenna EMCO 3160-09 (18 GHz – 26.5 GHz) 39

7.6 Antenna EMCO 3160-10 (26.5 GHz – 40 GHz) 40

8 Measurement Uncertainties 41

9 Photo Report 42

1 APPLIED STANDARDS AND TEST SUMMARY

1.1 APPLIED STANDARDS

Type of Authorization
Certification for a cellular mobile device.

Applicable FCC Rules

Prepared in accordance with the requirements of FCC Rules and Regulations as listed in 47 CFR Ch.1 Parts 2 and 22, 24, 27 (10-1-21 Edition). The following subparts are applicable to the results in this test report.

Part 2, Subpart J - Equipment Authorization Procedures, Certification

Part 22, Subpart H – Cellular Radiotelephone Service

§ 22.905 – Channels for cellular service
§ 22.913 – Effective radiated power limits
§ 22.917 – Emission limitations for cellular equipment

Part 27; Miscellaneous Wireless Communications Services
Subpart C – Technical standards

§ 27.50 – Power and duty cycle limits
§ 27.53 – Emission limits
§ 27.54 – Frequency stability

Part 24, Subpart E – Broadband PCS

§ 24.232 – Power and antenna height limits
§ 24.235 – Frequency stability
§ 24.238 – Emission limitations for Broadband PCS equipment

The tests were selected and performed with reference to:

- FCC Public Notice 971168 applying "Measurement guidance for certification of licensed digital transmitters" 971168 D01 v03r01, 2018-04-09
- ANSI C63.26: 2015

1.2 FCC-IC CORRELATION TABLE

Correlation of measurement requirements for Cellular Mobile Devices from FCC and ISED Canada

Measurement	FCC reference	ISED reference
RF Output Power	§ 2.1046 § 22.913	RSS-GEN Issue 5, 6.12 RSS-132 Issue 4, 5.4
Peak-Average-Ratio	-	RSS 132 Issue 4: 5.4
Emission and Occupied bandwidth	§ 2.1049	RSS-GEN Issue 5, 6.7
Spurious Emission at Antenna Terminals	§ 2.1051 § 22.917	RSS-GEN Issue 5, 6.13 RSS-132 Issue 4, 5.5
Band Edge Compliance	§ 2.1051 § 22.917	RSS-GEN Issue 4, 6.13 RSS-132 Issue 4, 5.5
Frequency stability	§ 2.1055 § 22.355	RSS-GEN Issue 5, 6.11 RSS-132 Issue 4: 5.3
Field strength of spurious radiation	§ 2.1053 § 22.917	RSS-GEN Issue 5, 6.13 RSS-132 Issue 4: 5.5

Correlation of measurement requirements for Cellular Mobile Devices from FCC and ISED Canada

Measurement	FCC reference	ISED reference
RF Output Power	§ 2.1046 § 27.50	RSS-GEN Issue 5, 6.12 RSS-130 Issue 2, 4.6.2/4.6.3 RSS-139 Issue 4, 5.5 RSS-199 Issue 3, 4.4
Peak to Average-Ratio	§ 27.50	RSS-130 Issue 2: 4.6.1 RSS 139 Issue 4: 5.5 RSS-199 Issue 3, 4.4
Emission and Occupied bandwidth	§ 2.1049	RSS-GEN Issue 5, 6.7
Spurious Emission at Antenna Terminals	§ 2.1051 § 27.53	RSS-GEN Issue 5, 6.13 RSS-130 Issue 2: 4.7.1/4.7.2 RSS-139 Issue 4, 5.6 RSS-199 Issue 3, 4.5
Band Edge Compliance	§ 2.1051 § 27.53	RSS-GEN Issue 5, 6.13 RSS-130 Issue 2: 4.7.1/4.7.2 RSS-139 Issue 4, 5.6 RSS-199 Issue 3, 4.5
Frequency stability	§ 2.1055 § 27.54	RSS-GEN Issue 5, 6.11 RSS-130 Issue 2: 4.5 RSS-139 Issue 4: 5.4 RSS-199 Issue 3, 4.3
Field strength of spurious radiation	§ 2.1053 § 27.53	RSS-GEN Issue 5, 6.13 RSS-130 Issue 2: 4.7.1/4.7.2 RSS-139 Issue 4: 5.6 RSS-199 Issue 3, 4.5

Correlation of measurement requirements for Cellular Mobile Devices from FCC and ISED Canada

Measurement	FCC reference	ISED reference
RF Output Power	§ 2.1046 § 24.232	RSS-GEN Issue 5, 6.12 RSS-133 Issue 6, 6.4
Peak-Average-Ratio	§ 24.232	RSS 133 Issue 6: 6.4
Emission and Occupied bandwidth	§ 2.1049	RSS-GEN Issue 5, 6.7
Spurious Emission at Antenna Terminals	§ 2.1051 § 24.238	RSS-GEN Issue 5, 6.13 RSS-133 Issue 6, 6.5
Band Edge Compliance	§ 2.1051 § 24.238	RSS-GEN Issue 5, 6.13 RSS-133 Issue 6, 6.5
Frequency stability	§ 2.1055 § 24.235	RSS-GEN Issue 5, 6.11 RSS-133 Issue 6: 6.3
Field strength of spurious radiation	§ 2.1053 § 24.236	RSS-GEN Issue 5, 6.13 RSS-133 Issue 6: 6.5

1.3 MEASUREMENT SUMMARY

47 CFR CHAPTER I FCC PART 22 Subpart H **§ 2.1053 § 22.917**

Field strength of spurious radiation
The measurement was performed according to ANSI C63.26: 2015; 5.5.2.3.1 **Final Result**

OP-Mode Technology, Radio Technology, Operating Frequency, ChBW, Ressource Blocks, Measurement method	Setup	Date	FCC	IC
NB-IoT, eFDD 5 QPSK, mid channel, 0.2 MHz, 1, radiated	S01_DA01	2023-02-10	Passed	Passed

47 CFR CHAPTER I FCC PART 24 Subpart E **§ 2.1053 § 24.236**

Field strength of spurious radiation
The measurement was performed according to ANSI C63.26: 2015; 5.5.2.3.1 **Final Result**

OP-Mode Technology, Radio Technology, Operating Frequency, ChBW, Ressource Blocks, Measurement method	Setup	Date	FCC	IC
CAT-M1, eFDD 2 QPSK, mid channel, 1.4 MHz, 1, radiated	S01_DA01	2023-02-10	Passed	Passed

47 CFR CHAPTER I FCC PART 27 Subpart C **§ 2.1053 § 27.53**

Field strength of spurious radiation
The measurement was performed according to ANSI C63.26: 2015; 5.5.2.3.1 **Final Result**

OP-Mode Technology, Radio Technology, Operating Frequency, ChBW, Ressource Blocks, Measurement method	Setup	Date	FCC	IC
CAT-M1, eFDD 4 QPSK, mid channel, 1.4 MHz, 1, radiated	S01_DA01	2023-02-10	Passed	Passed
NB-IoT, eFDD 85 QPSK, mid channel, 0.2 MHz, 1, radiated	S01_DA01	2023-02-10	Passed	Passed

N/A: Not applicable
N/P: Not performed

2 REVISION HISTORY / SIGNATURES

Report version control			
Version	**Release date**	**Change Description**	**Version validity**
initial	2023-05-31	--	valid
--	--	--	--

COMMENT:
Not all applicable tests were performed. Based on applicant's documentation 7layers has proposed and the applicant has agreed with the FCB/TCB to perform spot checks only.

(responsible for accreditation scope)
Dipl.-Ing. Marco Kullik

(responsible for testing and report)
B.Sc. Jens Dörwald

7 layers GmbH, Borsigstr. 11
40880 Ratingen, Germany
Phone +49 (0)2102 749 0

3 ADMINISTRATIVE DATA

3.1 TESTING LABORATORY

Company Name:	7layers GmbH
Address:	Borsigstr. 11 40880 Ratingen Germany

The test facility is accredited by the following accreditation organisation:

Laboratory accreditation no:	DAkkS D-PL-12140-01-01| -02 | -03
FCC Designation Number:	DE0015
FCC Test Firm Registration:	929146
ISED CAB Identifier	DE0007; ISED#: 3699A
Responsible for accreditation scope:	Dipl.-Ing. Marco Kullik
Report Template Version:	2022-05-25

3.2 PROJECT DATA

Responsible for testing and report:	B.Sc. Jens Dörwald
Employees who performed the tests:	documented internally at 7Layers
Date of Report:	2023-05-31
Testing Period:	2023-02-10 to 2023-02-10

3.3 APPLICANT DATA

Company Name:	u-blox AG
Address:	Zürcherstrasse 68 8800 Thalwil Switzerland
Contact Person:	MR. Giulio Comar

3.4 MANUFACTURER DATA

Company Name:	please see Applicant Data
Address:	
Contact Person:	

4 TEST OBJECT DATA

4.1 GENERAL EUT DESCRIPTION

Kind of Device product description	CAT-M1/NB-IoT Data Module
Product name	SARA-R520M10
Type	SARA-R520M10
Declared EUT data by the supplier	
General product description	The EUT is LTE CAT-M1 / NB-IoT module. It supports the following relevant bands for FCC/ISED approval eFDD2 / LTE eFDD4 / eFDD5 / eFDD8 / eFDD12 / eFDD13 / eFDD25 / eFDD26 / eFDD66 / eFDD71 eFDD85
Voltage Level	3.8 V DC
Voltage Type	DC

4.2 EUT MAIN COMPONENTS

Sample Name	**Sample Code**	**Description**
EUT A	DE1015165da01	Standard sample
Sample Parameter	**Value**	
Serial No.	IMEI: 350428920011177	
HW Version	UBX-4170C2	
SW Version	05.04, A00.01	
Comment	-	

NOTE:The short description is used to simplify the identification of the EUT in this test report.

4.3 ANCILLARY EQUIPMENT

For the purposes of this test report, ancillary equipment is defined as equipment which is used in conjunction with the EUT to provide operational and control features to the EUT. It is necessary to configure the system in a typical fashion, as a customer would normally use it. But nevertheless Ancillary Equipment can influence the test results.

Device	**Details (Manufacturer, Type Model, OUT Code)**	**Description**
-	-	-

4.4 AUXILIARY EQUIPMENT

For the purposes of this test report, auxiliary equipment is defined as equipment which is used temporarily to enable operational and control features especially used for the tests of the EUT

which is not used during normal operation or equipment that is used during the tests in combination with the EUT but is not subject of this test report. It is necessary to configure the system in a typical fashion, as a customer would normally use it.
But nevertheless Auxiliary Equipment can influence the test results.

Device	**Details (Manufacturer, Type Model, HW, SW, S/N)**	**Description**
-	-	-

4.5 EUT SETUPS

This chapter describes the combination of EUTs and equipment used for testing. The rationale for selecting the EUTs, ancillary and auxiliary equipment and interconnecting cables, is to test a representative configuration meeting the requirements of the referenced standards.

Setup	**Combination of EUTs**	**Description and Rationale**
S01_DA01	EUT A	radiated

4.6 OPERATING MODES / TEST CHANNELS

This chapter describes the operating modes of the EUTs used for testing.

		LOW	**MID**	**HIGH**	**LOW**	**MID**	**HIGH**	**LOW**	**MID**	**HIGH**
CAT-M1 eFDD 2	Cell BW [MHz]	1.4	1.4	1.4	3	3	3	5	5	5
	CH no.	18607	18900	19193	18615	18900	19185	18625	18900	19175
	f [MHz]	1850.7	1880.0	1909.3	1851.5	1880.0	1908.5	1852.5	1880.0	1907.5
		LOW	**MID**	**HIGH**	**LOW**	**MID**	**HIGH**	**LOW**	**MID**	**HIGH**
	Cell BW [MHz]	10	10	10	-	-	-	-	-	-
	CH no.	18650	18900	19150	-	-	-	-	-	-
	f [MHz]	1855.0	1880.0	1905.0	-	-	-	-	-	-

		LOW	**MID**	**HIGH**	**LOW**	**MID**	**HIGH**	**LOW**	**MID**	**HIGH**
CAT-M1 eFDD 4	Cell BW [MHz]	1.4	1.4	1.4	3	3	3	5	5	5
	CH no.	19957	20175	20393	19965	20175	20385	19975	20175	20375
	f [MHz]	1710.7	1732.5	1754.3	1711.5	1732.5	1753.5	1712.5	1732.5	1752.5
		LOW	**MID**	**HIGH**	**LOW**	**MID**	**HIGH**	**LOW**	**MID**	**HIGH**
	Cell BW [MHz]	10	10	10	-	-	-	-	-	-
	CH no.	20000	20175	20350	-	-	-	-	-	-
	f [MHz]	1715.0	1732.5	1750.0	-	-	-	-	-	-

		LOW	**MID**	**HIGH**
NB-IoT eFDD 5	Cell BW [MHz]	0.2	0.2	0.2
	CH no.	20401	20525	20649
	f [MHz]	824.1	836.5	848.9

		LOW	**MID**	**HIGH**
NB-IoT eFDD 85	Cell BW [MHz]	0.2	0.2	0.2
	CH no.	134004	134092	134180
	f [MHz]	698.2	707.0	715.8

4.7 PRODUCT LABELLING

4.7.1 FCC ID LABEL

Please refer to the documentation of the applicant.

4.7.2 LOCATION OF THE LABEL ON THE EUT

Please refer to the documentation of the applicant.

5 TEST RESULTS

5.1 FIELD STRENGTH OF SPURIOUS RADIATION

Standard **FCC PART 22 Subpart H**

The test was performed according to:
ANSI C63.26: 2015; 5.5.2.3.1

5.1.1 TEST DESCRIPTION

This test case is intended to demonstrate compliance to the applicable radiated spurious emission measurements per § 2.1053 and RSS-GEN 6.13. The limit and requirements come from the applicable rule part and ISED RSS-Standard for the operating band of the cellular device.

The EUT was connected to the test setup according to the following diagram:

Frequency Range: 30 MHz – 1 GHz:

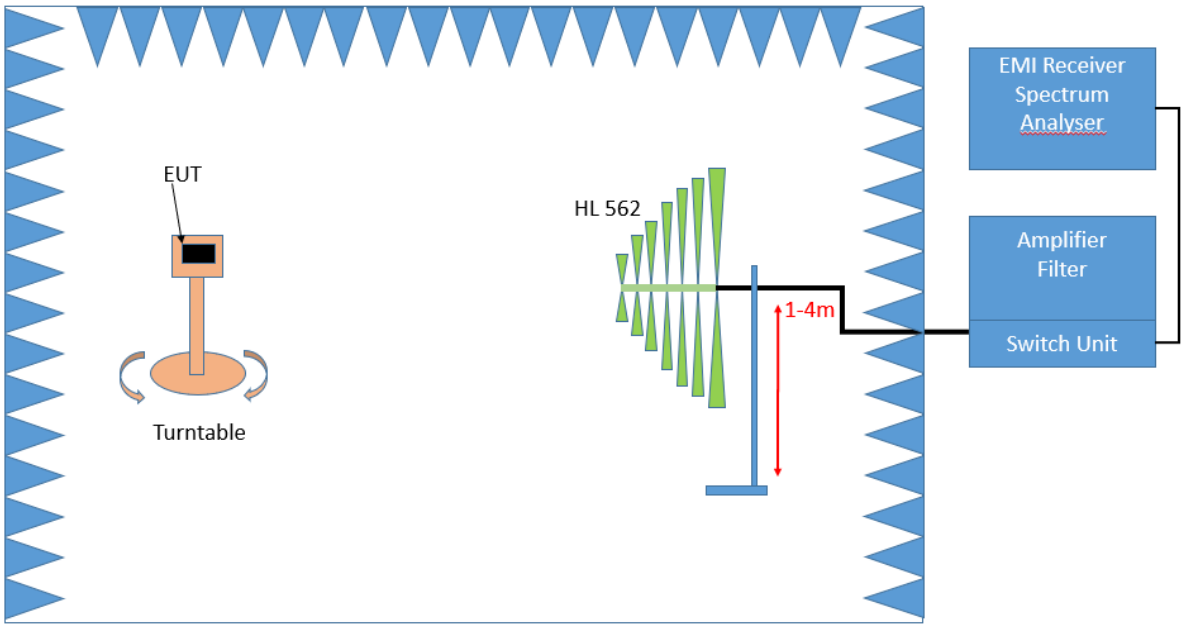

Test Setup; Spurious Emission Radiated (SAC), 30 MHz- 1GHz

Frequency Range: 1 GHz – 26.5 GHz

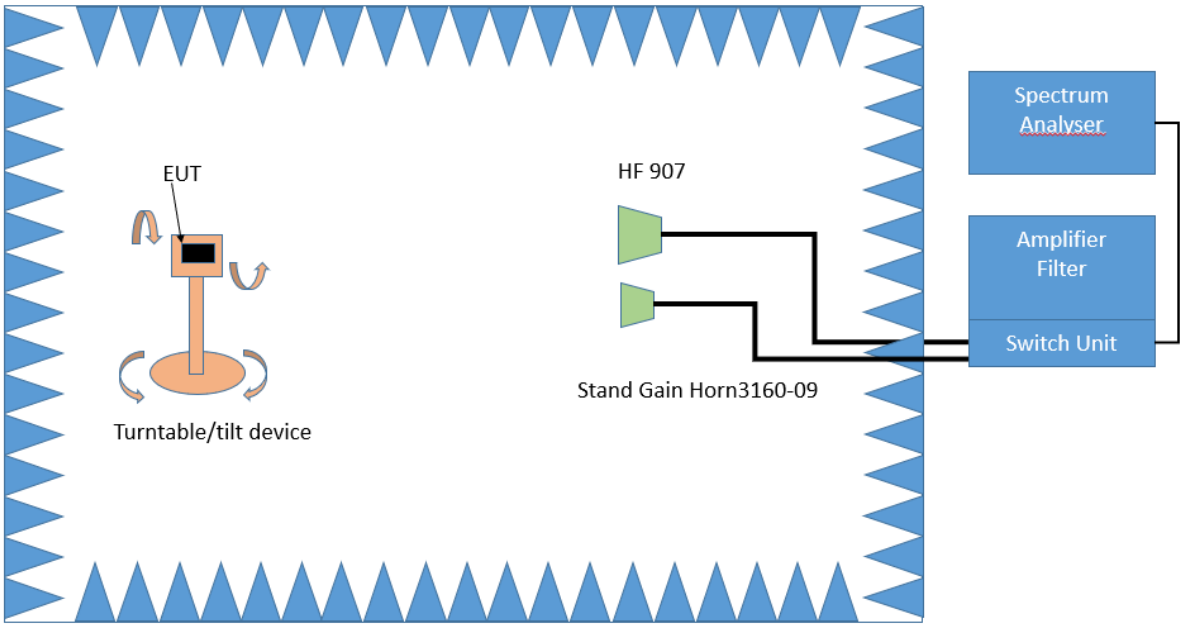

Test Setup; Spurious Emission Radiated (FAC), 1 GHz-26.5 GHz

The test set-up was made in accordance to the general provisions of ANSI C63.26 in a typical installation configuration. The Equipment Under Test (EUT) was set up on a non-conductive table 1.0 x 2.0 m² in the semi-anechoic chamber. The influence of the EUT support table that is used between 30–1000 MHz was evaluated.
The measurement procedure is implemented into the EMI test software EMC32 from R&S. Exploratory tests are performed at 3 orthogonal axes to determine the worst-case orientation of a body-worn or handheld EUT. The final test on all kind of EUTs is also performed at 3 axes. A pre-check is performed while the EUT is powered from a DC power source.

1. Measurement above 30 MHz and up to 1 GHz

Step 1: Preliminary scan
This is a preliminary test to identify the highest amplitudes relative to the limit.
Settings for step 1:
- Antenna distance: 3 m
- Detector: Peak
- RBW: 100 kHz
- VBW: 300 kHz
- Sweep time: coupled
- Turntable angle range: –180° to 90°
- Turntable step size: 90°
- Height variation range: 1 – 3 m
- Height variation step size: 2 m
- Polarisation: Horizontal + Vertical

Intention of this step is, to determine the radiated EMI-profile of the EUT. Afterwards the relevant emissions for the final measurement are identified.

Step 2: Adjustment measurement
In this step the accuracy of the turntable azimuth and antenna height will be improved. This is necessary to find out the maximum value of every frequency.
For each frequency, which was determined the turntable azimuth and antenna height will be adjusted. The turntable azimuth will slowly vary by ± 45° around this value. During this action, the value of emission is continuously measured. The turntable azimuth at the highest emission

will be recorded and adjusted. In this position, the antenna height will also slowly vary by ± 100 cm around the antenna height determined. During this action, the value of emission is also continuously measured. The antenna height of the highest emission will also be recorded and adjusted.
- Detector: Peak
- Measured frequencies: in step 1 determined frequencies
- RBW: 100 kHz
- VBW: 300 kHz
- Sweep time: coupled
- Turntable angle range: ± 45 ° around the determined value
- Height variation range: ± 100 cm around the determined value
- Antenna Polarisation: max. value determined in step 1

Step 3: Final measurement with RMS detector
With the settings determined in step 3, the final measurement will be performed:
EMI receiver settings for step 4:
- Detector: RMQ
- Measured frequencies: in step 1 determined frequencies
- RBW: 100 kHz
- VBW: 300 kHz
- Sweep time: 1 s

After the measurement a plot will be generated which contains a diagram with the results of the preliminary scan and a chart with the frequencies and values of the results of the final measurement.

3. Measurement above 1 GHz
The following modifications apply to the measurement procedure for the frequency range above 1 GHz:
Step 1:
The Equipment Under Test (EUT) was set up on a non-conductive support (tilt device) at 1.5 m height in the fully-anechoic chamber.
All steps were performed with one height (1.5 m) of the receiving antenna only.
The EUT is turned during the preliminary measurement across the elevation axis, with a step size of 90 °.
The turn table step size (azimuth angle) for the preliminary measurement is 45 °.
- Antenna distance: 3 m
- Detector: Peak
- RBW: 1 MHz
- VBW: 3 MHz
- Sweep time: coupled
- Turntable angle range: –180° to 90°
- Turntable step size: 90°
- Polarisation: Horizontal + Vertical

Step 2:
Due to the fact, that in this frequency range the test is performed in a fully anechoic room, the height scan of the receiving antenna instep 2 is omitted. Instead of this, a maximum search with a step size ± 45° for the elevation axis is performed.
The turn table azimuth will slowly vary by ± 22.5°.
The elevation angle will slowly vary by ± 45°
EMI receiver settings (for all steps):
- Detector: Peak,
- RBW: 1 MHz
- VBW: 3 MHz

- Sweep time: coupled

Step 3:

Spectrum analyser settings for step 3:
- Detector: RMS
- Measured frequencies: in step 1 determined frequencies
- RBW: 1 MHz
- VBW: 3 MHz
- Sweep Time: 1 s

5.1.2 TEST REQUIREMENTS / LIMITS

FCC Part 2.1053; Measurement required: Field strength of spurious radiation:

Measurements shall be made to detect spurious emissions that may be radiated directly from the cabinet, control circuits, power leads, or intermediate circuit elements under normal conditions of installation and operation. Curves or equivalent data shall be supplied showing the magnitude of each harmonic and other spurious emission. For this test, single sideband, independent sideband, and controlled carrier transmitters shall be modulated under the conditions specified in paragraph (c) of §2.1049, as appropriate.

Part 22, Subpart H – Cellular Radiotelephone Service

§ 22 917 – Emission limitations for cellular equipment

(a) Out of band emissions. The power of any emission outside of the authorized operating frequency ranges must be attenuated below the transmitting power (P) by a factor of at least 43 + 10 log(P) dB.

RSS-132; 5.5 Transmitter Unwanted Emissions

Mobile and base station equipment shall comply with the limits in (i) and (ii) below.

1. In the first 1.0 MHz band immediately outside and adjacent to each of the sub-bands specified in Section 5.1, the power of emissions per any 1% of the occupied bandwidth shall be attenuated (in dB) below the transmitter output power P (dBW) by at least 43 + 10 $\log_{10}$p (watts).
2. After the first 1.0 MHz immediately outside and adjacent to each of the sub-bands, the power of emissions in any 100 kHz bandwidth shall be attenuated (in dB) below the transmitter output power P (dBW) by at least 43 + 10 $\log_{10}$ p (watts). If the measurement is performed using 1% of the occupied bandwidth, power integration over 100 kHz is required.

5.1.3 TEST PROTOCOL

Ambient temperature: 20 °C
Relative humidity: 35 %

Radio Technology	Channel	Detector	Trace	Resolution Bandwidth /kHz	Frequency /MHz	Peak Value /dBm	Limit /dBm	Margin to Limit /dB
NB-IoT eFDD5	mid	rms	maxhold	-	-	-	-13	>20

Remark: Please see next sub-clause for the measurement plot.

5.1.4 MEASUREMENT PLOT (EXAMPLE PLOT, SHOWING WORST CASE, IF APPLICABLE)

NB-IoT eFDD 5 QPSK, channel = mid
S01_DA01
30 MHz – 1 GHz

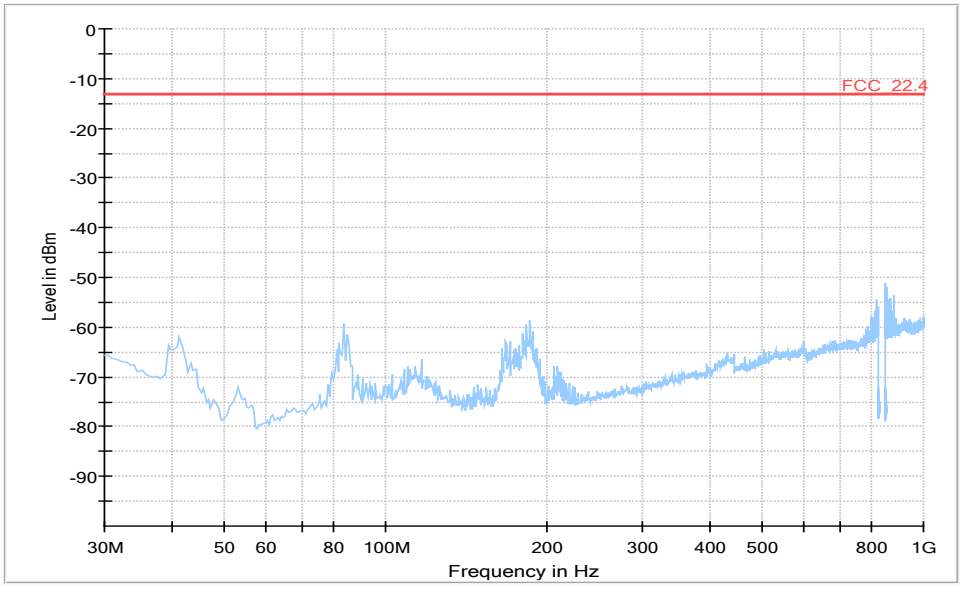

1 GHz – 10 GHz

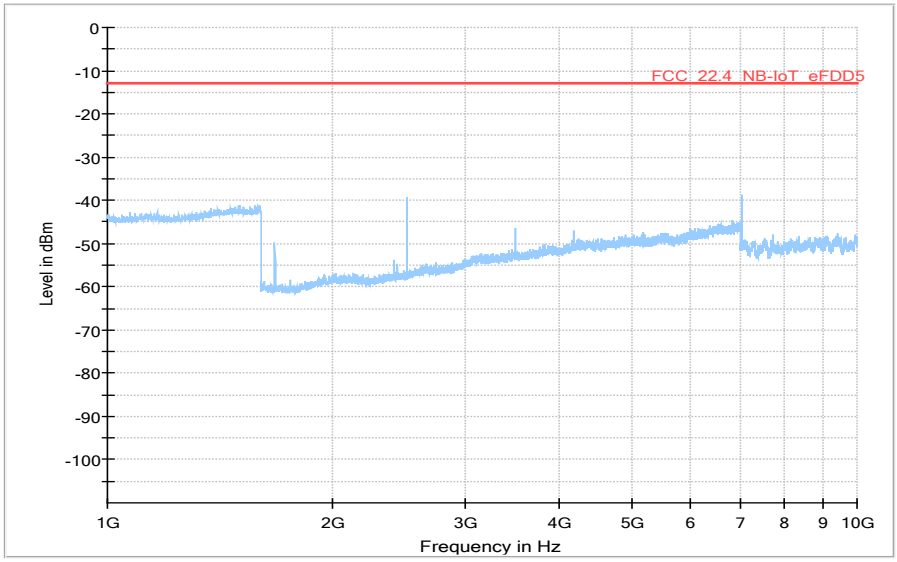

Final_Result

Frequency (MHz)	RMS (dBm	Limit (dBm	Margi n	Meas. Time (ms)	Bandwidt h	Heigh t	Pol	Azimut h	Elevatio n	Corr. (dB)
---	---	---	---	---	---	---		---	---	---

5.1.5 TEST EQUIPMENT USED

- Radiated Emissions SAC

5.2 FIELD STRENGTH OF SPURIOUS RADIATION

Standard **FCC PART 24 Subpart E**

The test was performed according to:
ANSI C63.26: 2015; 5.5.2.3.1

5.2.1 TEST DESCRIPTION

This test case is intended to demonstrate compliance to the applicable radiated spurious emission measurements per § 2.1053 and RSS-GEN 6.13. The limit and requirements come from the applicable rule part and ISED RSS-Standard for the operating band of the cellular device.

The EUT was connected to the test setup according to the following diagram:

Frequency Range: 30 MHz – 1 GHz:

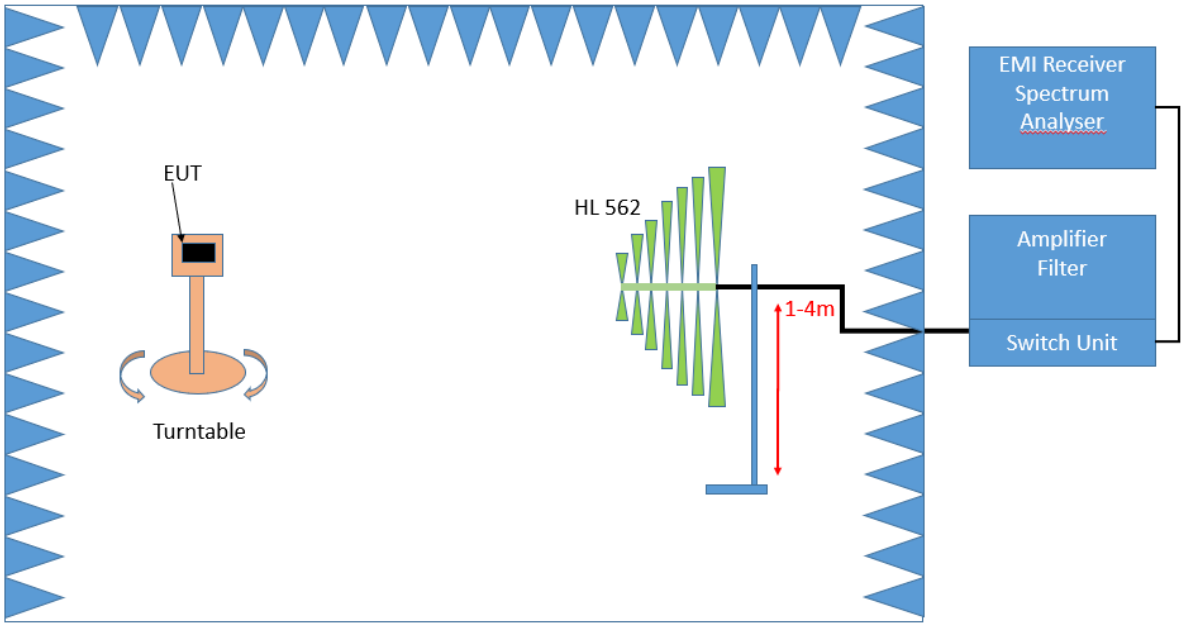

Test Setup; Spurious Emission Radiated (SAC), 30 MHz- 1GHz

Frequency Range: 1 GHz – 26.5 GHz

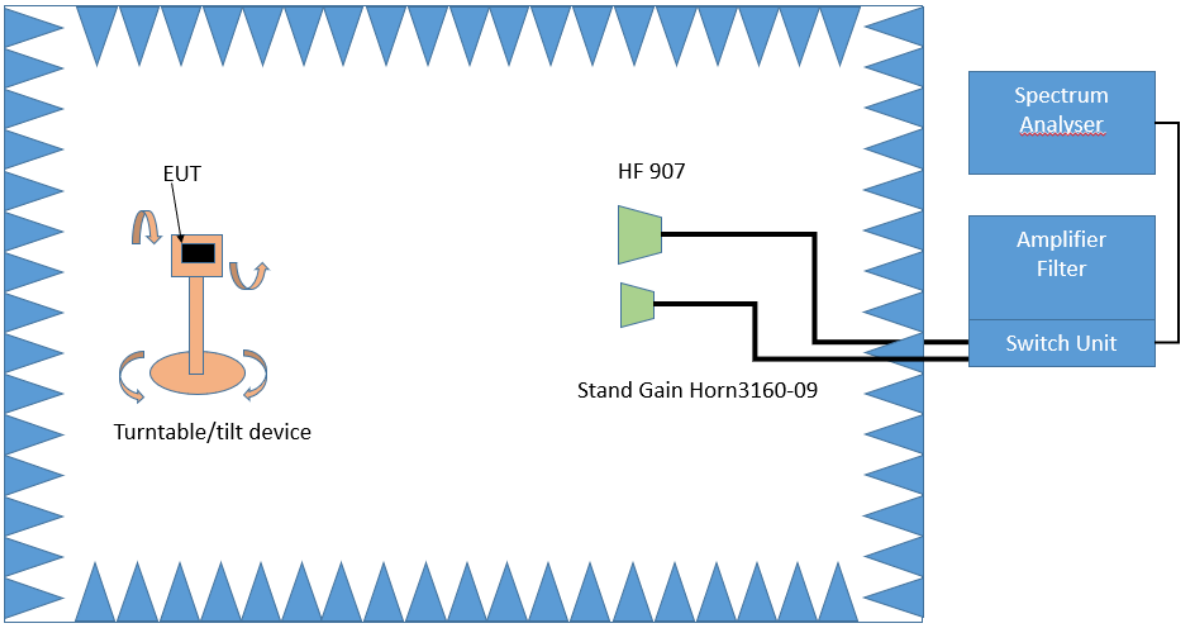

Test Setup; Spurious Emission Radiated (FAC), 1 GHz-26.5 GHz

The test set-up was made in accordance to the general provisions of ANSI C63.26 in a typical installation configuration. The Equipment Under Test (EUT) was set up on a non-conductive table 1.0 x 2.0 m² in the semi-anechoic chamber. The influence of the EUT support table that is used between 30–1000 MHz was evaluated.
The measurement procedure is implemented into the EMI test software EMC32 from R&S. Exploratory tests are performed at 3 orthogonal axes to determine the worst-case orientation of a body-worn or handheld EUT. The final test on all kind of EUTs is also performed at 3 axes. A pre-check is performed while the EUT is powered from a DC power source.

1. Measurement above 30 MHz and up to 1 GHz

Step 1: Preliminary scan
This is a preliminary test to identify the highest amplitudes relative to the limit.
Settings for step 1:
- Antenna distance: 3 m
- Detector: Peak
- RBW: 100 kHz
- VBW: 300 kHz
- Sweep time: coupled
- Turntable angle range: –180° to 90°
- Turntable step size: 90°
- Height variation range: 1 – 3 m
- Height variation step size: 2 m
- Polarisation: Horizontal + Vertical

Intention of this step is, to determine the radiated EMI-profile of the EUT. Afterwards the relevant emissions for the final measurement are identified.

Step 2: Adjustment measurement
In this step the accuracy of the turntable azimuth and antenna height will be improved. This is necessary to find out the maximum value of every frequency.
For each frequency, which was determined the turntable azimuth and antenna height will be adjusted. The turntable azimuth will slowly vary by ± 45° around this value. During this action, the value of emission is continuously measured. The turntable azimuth at the highest emission

will be recorded and adjusted. In this position, the antenna height will also slowly vary by ± 100 cm around the antenna height determined. During this action, the value of emission is also continuously measured. The antenna height of the highest emission will also be recorded and adjusted.
- Detector: Peak
- Measured frequencies: in step 1 determined frequencies
- RBW: 100 kHz
- VBW: 300 kHz
- Sweep time: coupled
- Turntable angle range: ± 45 ° around the determined value
- Height variation range: ± 100 cm around the determined value
- Antenna Polarisation: max. value determined in step 1

Step 3: Final measurement with RMS detector
With the settings determined in step 3, the final measurement will be performed:
EMI receiver settings for step 4:
- Detector: RMQ
- Measured frequencies: in step 1 determined frequencies
- RBW: 100 kHz
- VBW: 300 kHz
- Sweep time: 1 s

After the measurement a plot will be generated which contains a diagram with the results of the preliminary scan and a chart with the frequencies and values of the results of the final measurement.

3. Measurement above 1 GHz
The following modifications apply to the measurement procedure for the frequency range above 1 GHz:
Step 1:
The Equipment Under Test (EUT) was set up on a non-conductive support (tilt device) at 1.5 m height in the fully-anechoic chamber.
All steps were performed with one height (1.5 m) of the receiving antenna only.
The EUT is turned during the preliminary measurement across the elevation axis, with a step size of 90 °.
The turn table step size (azimuth angle) for the preliminary measurement is 45 °.
- Antenna distance: 3 m
- Detector: Peak
- RBW: 1 MHz
- VBW: 3 MHz
- Sweep time: coupled
- Turntable angle range: –180° to 90°
- Turntable step size: 90°
- Polarisation: Horizontal + Vertical

Step 2:
Due to the fact, that in this frequency range the test is performed in a fully anechoic room, the height scan of the receiving antenna instep 2 is omitted. Instead of this, a maximum search with a step size ± 45° for the elevation axis is performed.
The turn table azimuth will slowly vary by ± 22.5°.
The elevation angle will slowly vary by ± 45°
EMI receiver settings (for all steps):
- Detector: Peak,
- RBW: 1 MHz
- VBW: 3 MHz

- Sweep time: coupled

Step 3:

Spectrum analyser settings for step 3:
- Detector: RMS
- Measured frequencies: in step 1 determined frequencies
- RBW: 1 MHz
- VBW: 3 MHz
- Sweep Time: 1 s

5.2.2 TEST REQUIREMENTS / LIMITS

FCC Part 2.1053; Measurement required: Field strength of spurious radiation:

Measurements shall be made to detect spurious emissions that may be radiated directly from the cabinet, control circuits, power leads, or intermediate circuit elements under normal conditions of installation and operation. Curves or equivalent data shall be supplied showing the magnitude of each harmonic and other spurious emission. For this test, single sideband, independent sideband, and controlled carrier transmitters shall be modulated under the conditions specified in paragraph (c) of §2.1049, as appropriate.

Part 24, Subpart E – Broadband PCS

§ 24 238 – Emission limitations for Broadband PCS equipment

a) Out of band emissions. The power of any emission outside of the authorized operating frequency ranges must be attenuated below the transmitting power (P) by a factor of at least 43 + 10 log(P) dB.

b) Measurement procedure. Compliance with these rules is based on the use of measurement instrumentation employing a resolution bandwidth of 1 MHz or greater. However, in the 1 MHz bands immediately outside and adjacent to the frequency block a resolution bandwidth of at least one percent of the emission bandwidth of the fundamental emission of the transmitter may be employed. A narrower resolution bandwidth is permitted in all cases to improve measurement accuracy provided the measured power is integrated over the full required measurement bandwidth (i.e. 1 MHz or 1 percent of emission bandwidth, as specified). The emission bandwidth is defined as the width of the signal between two points, one below the carrier center frequency and one above the carrier center frequency, outside of which all emissions are attenuated at least 26 dB below the transmitter power.

RSS-133; 6.5 Transmitter Unwanted Emissions

Mobile and base station equipment shall comply with the limits in (1) and (2) below.

1. In the 1.0 MHz bands immediately outside and adjacent to the equipment's operating frequency block, the emission power per any 1% of the emission bandwidth shall be attenuated (in dB) below the transmitter output power P (dBW) by at least 43 + 10 $\log_{10}$p (watts).
2. After the first 1.0 MHz, the emission power in any 1 MHz bandwidth shall be attenuated (in dB) below the transmitter output power P (dBW) by at least 43 + 10 $\log_{10}$p (watts). If the measurement is performed using 1% of the emission bandwidth, power integration over 1.0 MHz is required.

5.2.3 TEST PROTOCOL

Ambient temperature: 20 °C
Relative humidity: 35 %

Radio Technology	Channel	Detector	Trace	Resolution Bandwidth /kHz	Frequency /MHz	Peak Value /dBm	Limit /dBm	Margin to Limit /dB
CAT-M1 eFDD2	mid	rms	maxhold	-	-	-	-13	>20

Remark: Please see next sub-clause for the measurement plot.

5.2.4 MEASUREMENT PLOT (EXAMPLE PLOT, SHOWING WORST CASE, IF APPLICABLE)

CAT-M1 eFDD 2 QPSK, channel = mid
S01_DA01
30 MHz – 1 GHz

1 GHz – 20 GHz

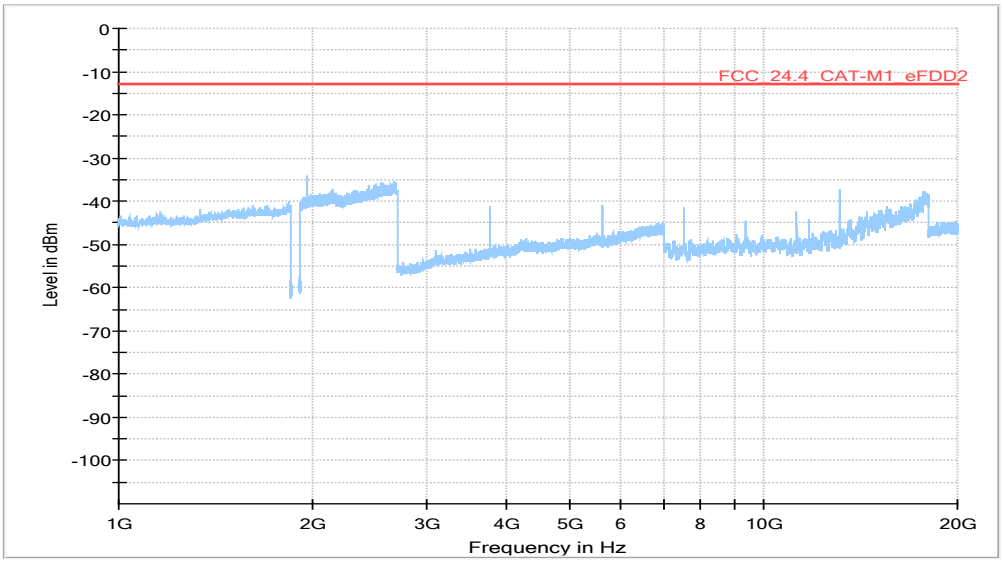

Final_Result

Frequency (MHz)	RMS (dBm)	Limit (dBm)	Margin (dB)	Meas. Time (ms)	Bandwidth (kHz)	Height (cm)	Pol	Azimuth (deg)	Elevation (deg)	Corr. (dB)
---	---	---	---	---	---	---		---	---	---

5.2.5 TEST EQUIPMENT USED

- Radiated Emissions SAC

5.3 FIELD STRENGTH OF SPURIOUS RADIATION

Standard **FCC PART 27 Subpart C**

The test was performed according to:
ANSI C63.26: 2015; 5.5.2.3.1

5.3.1 TEST DESCRIPTION

This test case is intended to demonstrate compliance to the applicable radiated spurious emission measurements per § 2.1053 and RSS-GEN 6.13. The limit and requirements come from the applicable rule part and ISED RSS-Standard for the operating band of the cellular device.

The EUT was connected to the test setup according to the following diagram:

Frequency Range: 30 MHz – 1 GHz:

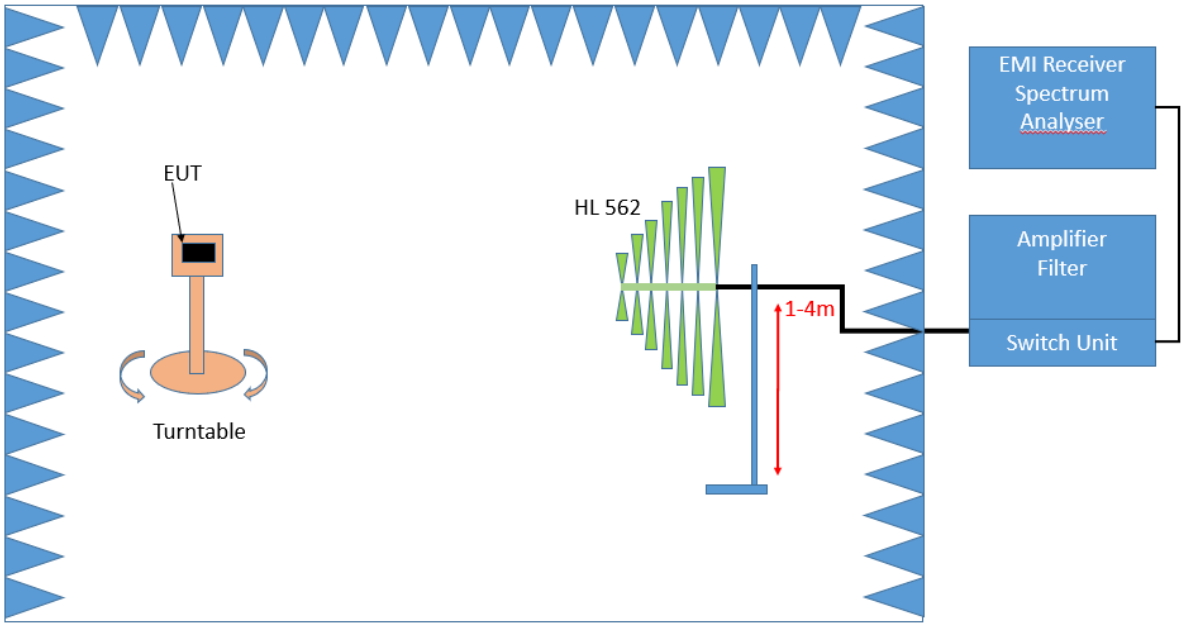

Test Setup; Spurious Emission Radiated (SAC), 30 MHz- 1GHz

Frequency Range: 1 GHz – 26.5 GHz

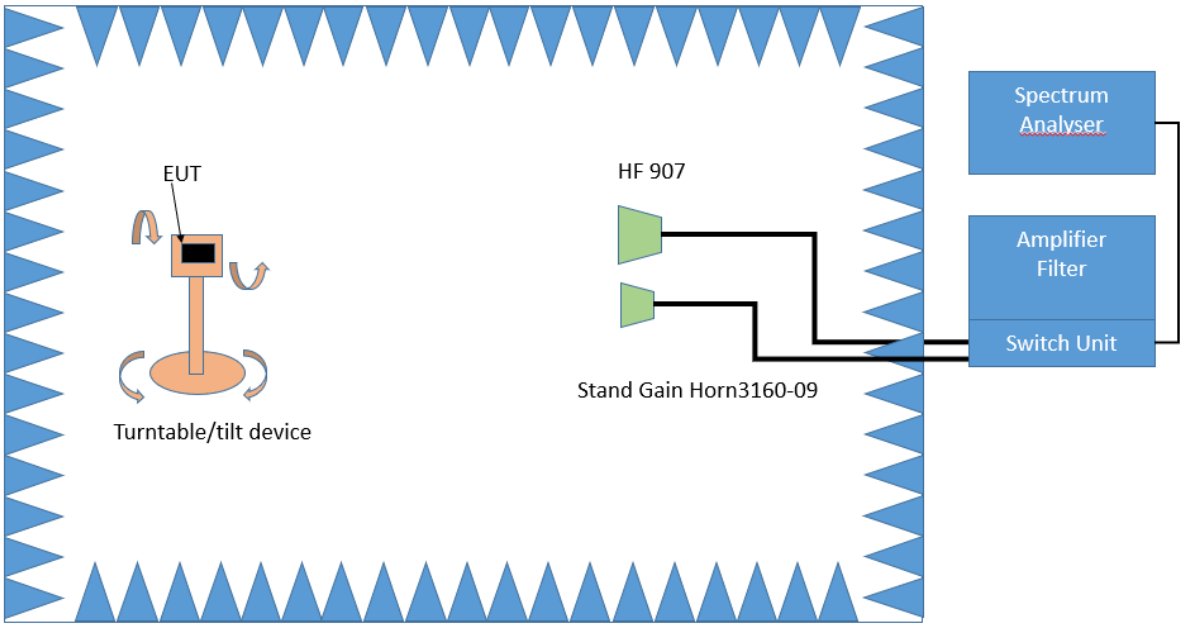

Test Setup; Spurious Emission Radiated (FAC), 1 GHz-26.5 GHz

The test set-up was made in accordance to the general provisions of ANSI C63.26 in a typical installation configuration. The Equipment Under Test (EUT) was set up on a non-conductive table 1.0 x 2.0 m² in the semi-anechoic chamber. The influence of the EUT support table that is used between 30–1000 MHz was evaluated.
The measurement procedure is implemented into the EMI test software EMC32 from R&S. Exploratory tests are performed at 3 orthogonal axes to determine the worst-case orientation of a body-worn or handheld EUT. The final test on all kind of EUTs is also performed at 3 axes. A pre-check is performed while the EUT is powered from a DC power source.

1. Measurement above 30 MHz and up to 1 GHz

Step 1: Preliminary scan
This is a preliminary test to identify the highest amplitudes relative to the limit.
Settings for step 1:
- Antenna distance: 3 m
- Detector: Peak
- RBW: 100 kHz
- VBW: 300 kHz
- Sweep time: coupled
- Turntable angle range: –180° to 90°
- Turntable step size: 90°
- Height variation range: 1 – 3 m
- Height variation step size: 2 m
- Polarisation: Horizontal + Vertical

Intention of this step is, to determine the radiated EMI-profile of the EUT. Afterwards the relevant emissions for the final measurement are identified.

Step 2: Adjustment measurement
In this step the accuracy of the turntable azimuth and antenna height will be improved. This is necessary to find out the maximum value of every frequency.
For each frequency, which was determined the turntable azimuth and antenna height will be adjusted. The turntable azimuth will slowly vary by ± 45° around this value. During this action, the value of emission is continuously measured. The turntable azimuth at the highest emission

will be recorded and adjusted. In this position, the antenna height will also slowly vary by ± 100 cm around the antenna height determined. During this action, the value of emission is also continuously measured. The antenna height of the highest emission will also be recorded and adjusted.
- Detector: Peak
- Measured frequencies: in step 1 determined frequencies
- RBW: 100 kHz
- VBW: 300 kHz
- Sweep time: coupled
- Turntable angle range: ± 45 ° around the determined value
- Height variation range: ± 100 cm around the determined value
- Antenna Polarisation: max. value determined in step 1

Step 3: Final measurement with RMS detector
With the settings determined in step 3, the final measurement will be performed:
EMI receiver settings for step 4:
- Detector: RMQ
- Measured frequencies: in step 1 determined frequencies
- RBW: 100 kHz
- VBW: 300 kHz
- Sweep time: 1 s

After the measurement a plot will be generated which contains a diagram with the results of the preliminary scan and a chart with the frequencies and values of the results of the final measurement.

3. Measurement above 1 GHz
The following modifications apply to the measurement procedure for the frequency range above 1 GHz:
Step 1:
The Equipment Under Test (EUT) was set up on a non-conductive support (tilt device) at 1.5 m height in the fully-anechoic chamber.
All steps were performed with one height (1.5 m) of the receiving antenna only.
The EUT is turned during the preliminary measurement across the elevation axis, with a step size of 90 °.
The turn table step size (azimuth angle) for the preliminary measurement is 45 °.
- Antenna distance: 3 m
- Detector: Peak
- RBW: 1 MHz
- VBW: 3 MHz
- Sweep time: coupled
- Turntable angle range: –180° to 90°
- Turntable step size: 90°
- Polarisation: Horizontal + Vertical

Step 2:
Due to the fact, that in this frequency range the test is performed in a fully anechoic room, the height scan of the receiving antenna instep 2 is omitted. Instead of this, a maximum search with a step size ± 45° for the elevation axis is performed.
The turn table azimuth will slowly vary by ± 22.5°.
The elevation angle will slowly vary by ± 45°
EMI receiver settings (for all steps):
- Detector: Peak,
- RBW: 1 MHz
- VBW: 3 MHz

- Sweep time: coupled

Step 3:

Spectrum analyser settings for step 3:
- Detector: RMS
- Measured frequencies: in step 1 determined frequencies
- RBW: 1 MHz
- VBW: 3 MHz
- Sweep Time: 1 s

5.3.2 TEST REQUIREMENTS / LIMITS

FCC Part 2.1053; Measurement required: Field strength of spurious radiation:

Measurements shall be made to detect spurious emissions that may be radiated directly from the cabinet, control circuits, power leads, or intermediate circuit elements under normal conditions of installation and operation. Curves or equivalent data shall be supplied showing the magnitude of each harmonic and other spurious emission. For this test, single sideband, independent sideband, and controlled carrier transmitters shall be modulated under the conditions specified in paragraph (c) of §2.1049, as appropriate.

FCC Part 27; Miscellaneous Wireless Communication Services

Subpart C – Technical standards

§27.53 – Emission limits

Band 12 / 85:

(g) For operations in the 600 MHz band and the 698-746 MHz band, the power of any emission outside a licensee's frequency band(s) of operation shall be attenuated below the transmitter power (P) within the licensed band(s) of operation, measured in watts, by at least 43 + 10 log (P) dB. Compliance with this provision is based on the use of measurement instrumentation employing a resolution bandwidth of 100 kilohertz or greater. However, in the 100 kilohertz bands immediately outside and adjacent to a licensee's frequency block, a resolution bandwidth of at least 30 kHz may be employed.

RSS-130; 4.7.1 General unwanted emissions limits

The unwanted emissions in any 100 kHz bandwidth on any frequency outside the low frequency edge and the high frequency edge of each frequency block range(s), shall be attenuated below the transmitter power, P (dBW), by at least 43 + 10 $\log_{10}$ p (watts), dB. However, in the 100 kHz band immediately outside of the equipment's frequency block range, a resolution bandwidth of 30 kHz may be employed.

RSS-130; 4.7.2 Additional unwanted emissions limits

In addition to the limit outlined in section 4.7.1 above, equipment operating in the frequency bands 746-756 MHz and 777-787 MHz shall also comply with the following restrictions:

a. the power of any unwanted emissions in any 6.25 kHz bandwidth for all frequencies between 763-775 MHz and 793-806 MHz shall be attenuated below the transmitter power, P (dBW), by at least:

   i. 76 + 10 $\log_{10}$ p (watts), dB, for base and fixed equipment and

   ii. 65 + 10 $\log_{10}$ p (watts), dB, for mobile and portable equipment

b. the e.i.r.p. in the band 1559-1610 MHz shall not exceed −70 dBW/MHz for wideband signal and −80 dBW for discrete emission with bandwidth less than 700 Hz.

Band 4/10/66:

(h) *AWS emission limits*—(1) *General protection levels.* Except as otherwise specified below, for operations in the 1695-1710 MHz, 1710-1755 MHz, 1755-1780 MHz, 1915-1920 MHz, 1995-2000 MHz, 2000-2020 MHz, 2110-2155 MHz, 2155-2180 MHz, and 2180-2200 bands, the power of any emission outside a licensee's frequency block shall be attenuated below the transmitter power (P) in watts by at least 43 + 10 $\log_{10}$ (P) dB.

RSS-139; 6.6 Transmitter Unwanted Emissions

Equipment shall comply with the limits in (i) and (ii) below.

i. In the first 1.0 MHz bands immediately outside and adjacent to the equipment's smallest operating frequency block, which can contain the equipment's occupied bandwidth, the emission power per any 1% of the emission bandwidth shall be attenuated below the transmitter output power P (in dBW) by at least 43 + 10 $\log_{10}$ p (watts) dB.
ii. After the first 1.0 MHz outside the equipment's smallest operating frequency block, which can contain the equipment's occupied bandwidth, the emission power in any 1 MHz bandwidth shall be attenuated below the transmitter output power P (in dBW) by at least 43 + 10 $\log_{10}$ p (watts) dB.

5.3.3 TEST PROTOCOL

Ambient temperature: 20 °C
Relative humidity: 35 %

Radio Technology	Channel	Detector	Trace	Resolution Bandwidth /kHz	Frequency /MHz	Peak Value /dBm	Limit /dBm	Margin to Limit /dB
CAT-M1 eFDD4	mid	Peak	maxhold	1000	1706.7	-22.89	-13	9.89
CAT-M1 eFDD4	mid	Peak	maxhold	1000	1756.94	-20.22	-13	7.22

Radio Technology	Channel	Detector	Trace	Resolution Bandwidth /kHz	Frequency /MHz	Peak Value /dBm	Limit /dBm	Margin to Limit /dB
NB-IoT eFDD85	mid	Peak	maxhold	-	-	-	-13	> 20

Remark: Please see next sub-clause for the measurement plot.

5.3.4 MEASUREMENT PLOT (EXAMPLE PLOT, SHOWING WORST CASE, IF APPLICABLE)

CAT-M1 eFDD 4 QPSK, channel = mid
S01_DA01
30 MHz – 1 GHz

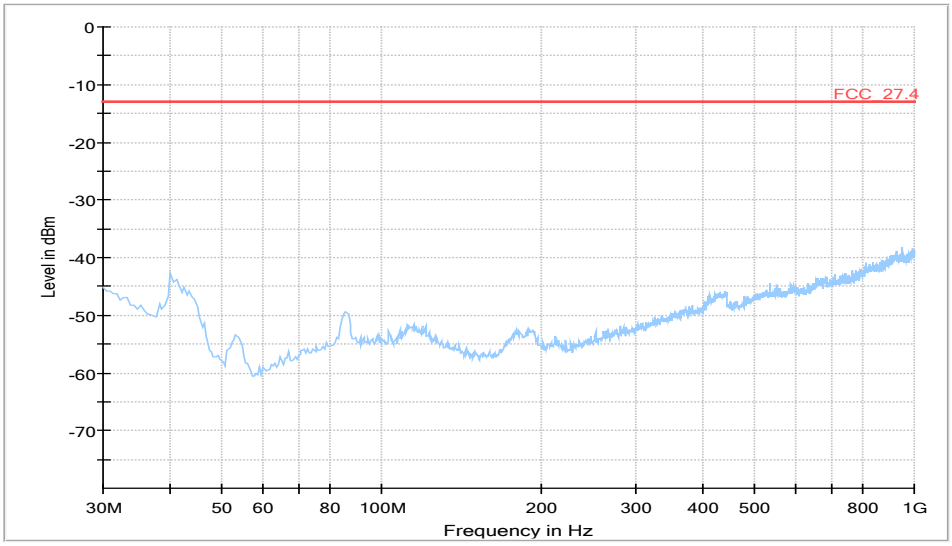

1 GHz -20 GHz

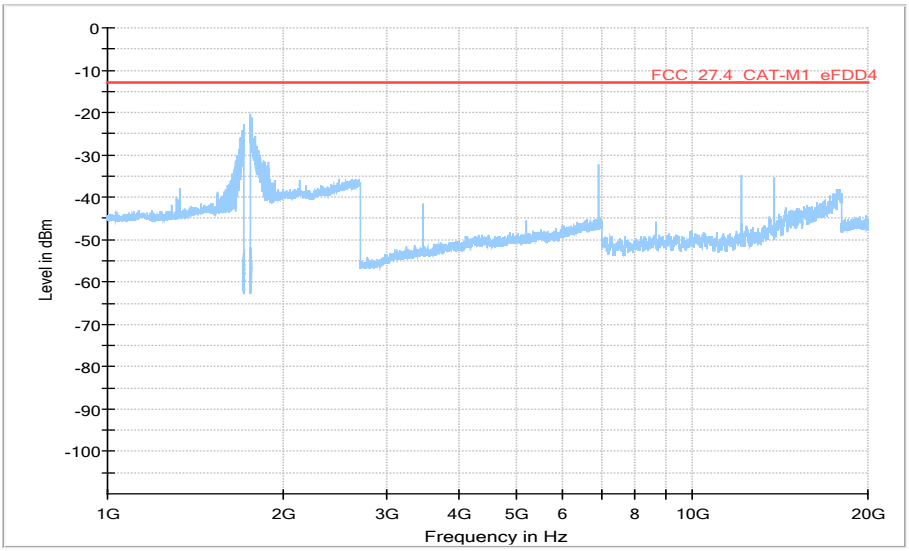

Final_Result

Frequency (MHz)	RMS (dBm	Limit (dBm	Margin	Meas. Time (ms)	Bandwidth	Height	Pol	Azimuth	Elevation	Corr. (dB)
---	---	---	---	---	---	---		---	---	---

NB-IoT eFDD 85 QPSK, channel = mid
S01_DA01
30 MHz – 1 GHz

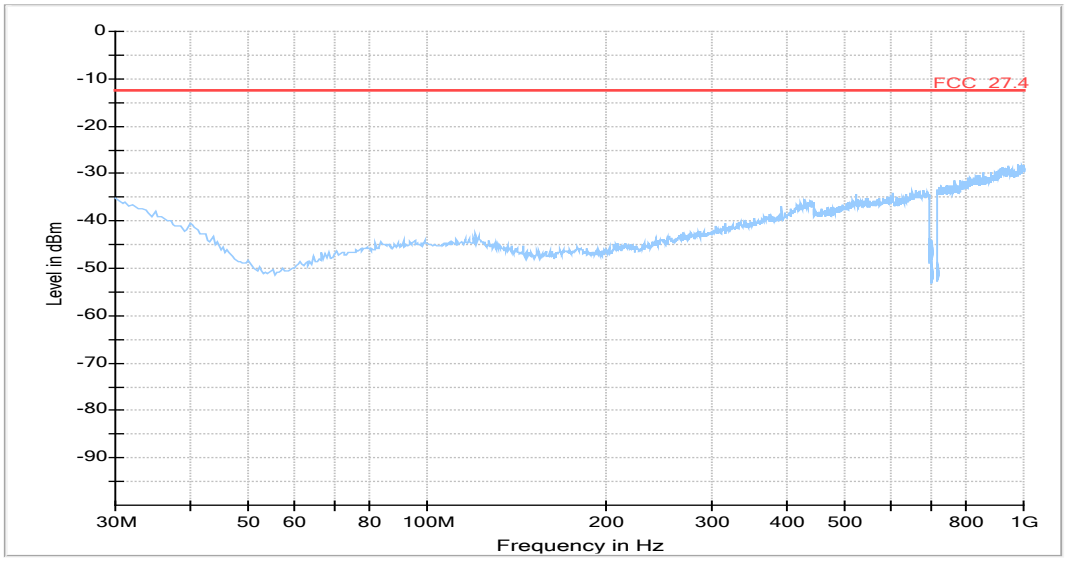

1 GHz -10 GHz

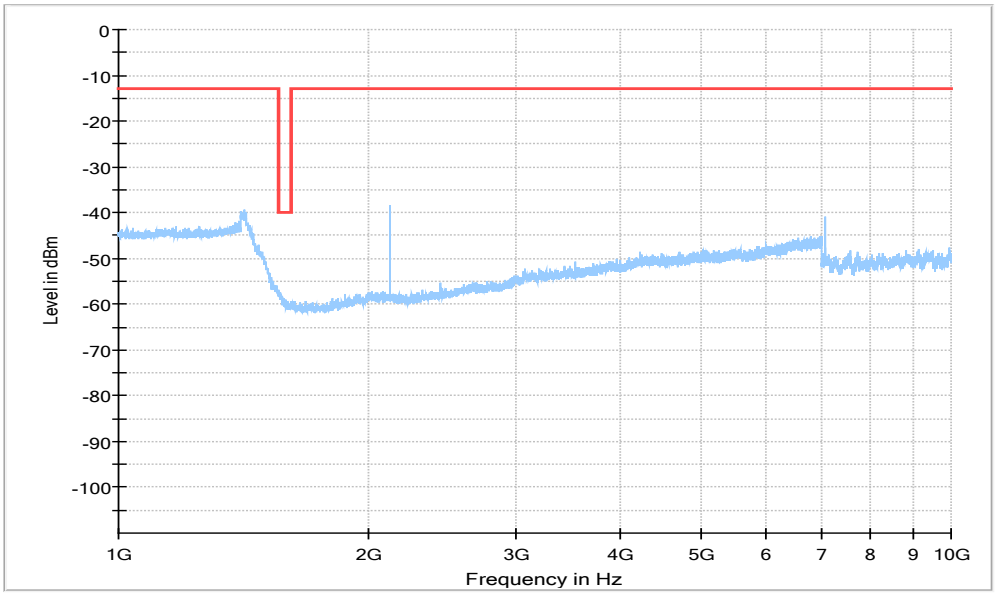

Final_Result

Frequency (MHz)	RMS (dBm)	Limit (dBm)	Margin (dB)	Meas. Time (ms)	Bandwidth (kHz)	Height (cm)	Pol	Azimuth (deg)	Elevation (deg)	Corr. (dB)
---	---	---	---	---	---	---		---	---	---

5.3.5 TEST EQUIPMENT USED

- Radiated Emissions SAC

6 TEST EQUIPMENT

6.1 TEST EQUIPMENT HARDWARE

1 Radiated Emissions SAC
Lab to perform radiated emission tests in semi anechoic configuration

Ref.No.	Device Name	Description	Manufacturer	Serial Number	Last Calibration	Calibration Due
1.1	N5000/NP	Filter for EUT, 2 Lines, 250 V, 16 A	ETS-LINDGREN	241515		
1.2	Opus10 TPR (8253.00)	T/P Logger 13	Lufft Mess- und Regeltechnik GmbH	13936	2021-10	2023-10
1.3	ESW44	EMI Receiver / Spectrum Analyzer	Rohde & Schwarz GmbH & Co. KG	101603	2022-01	2024-01
1.4	Anechoic Chamber 01	SAC/FAR, 10.58 m x 6.38 m x 6.00 m	Frankonia	none		
1.5	HL 562 ULTRALOG	Biconical-log-per antenna (30 MHz - 3 GHz) with HL 562E biconicals	Rohde & Schwarz GmbH & Co. KG	830547/003	2021-09	2024-09
1.6	Fluke 177	Digital Multimeter 03 (Multimeter)	Fluke Europe B.V.	86670383	2022-06	2024-06
1.7	Opus10 THI (8152.00)	T/H Logger 10	Lufft Mess- und Regeltechnik GmbH	12488	2021-08	2023-08
1.8	EP 1200/B, NA/B1	AC Source, Amplifier with integrated variable Oscillator	Spitzenberger & Spies GmbH & Co. KG	B6278		
1.9	DS 420S	Turn Table 2 m diameter	HD GmbH	420/573/99		
1.10	JS4-00102600-42-5A	Broadband Amplifier 30 MHz - 26 GHz	Miteq	619368		
1.11	MA4985-XP-ET	Bore Sight Antenna Mast	innco systems GmbH	none		
1.12	HFH2-Z2	Loop Antenna + 3 Axis Tripod	Rohde & Schwarz GmbH & Co. KG	829324/006	2021-01	2024-01
1.13	HF 907-2	Double-ridged horn	Rohde & Schwarz	102817	2022-07	2025-07
1.14	AM 4.0	Antenna Mast 4 m	Maturo GmbH	AM4.0/180/1192 0513		

The calibration interval is the time interval between “Last Calibration” and “Calibration Due”

6.2 TEST EQUIPMENT SOFTWARE

Semi-Anechoic Chamber:	
Software	Version
EMC32 Measurement Software	10.60.10
INNCO Mast Controller	1.02.62
MATURO Mast Controller	12.19
MATURO Turn-Table Controller	30.10
Fully-Anechoic Chamber:	
Software	Version
EMC32 Measurement Software	10.60.10
MATURO Turn-Unit Cotrolller	11.10
MATURO Mast Controller	12.10
MATURO Turntable Controller	12.11
Conducted AC Emissions:	
Software	Version
EMC32 Measurement Software	10.60.20

7 ANTENNA FACTORS, CABLE LOSS AND SAMPLE CALCULATIONS

This chapter contains the antenna factors with their corresponding path loss of the used measurement path for all antennas as well as the insertion loss of the LISN.

7.1 LISN R&S ESH3-Z5 (150 KHZ – 30 MHZ)

Frequency		Corr.	LISN insertion loss ESH3-Z5	cable loss (incl. 10 dB atten-uator)
MHz		dB	dB	dB
0.15		10.1	0.1	10.0
5		10.3	0.1	10.2
7		10.5	0.2	10.3
10		10.5	0.2	10.3
12		10.7	0.3	10.4
14		10.7	0.3	10.4
16		10.8	0.4	10.4
18		10.9	0.4	10.5
20		10.9	0.4	10.5
22		11.1	0.5	10.6
24		11.1	0.5	10.6
26		11.2	0.5	10.7
28		11.2	0.5	10.7
30		11.3	0.5	10.8

Sample calculation

U_{LISN} (dB µV) = U (dB µV) + Corr. (dB)
U = Receiver reading
LISN Insertion loss = Voltage Division Factor of LISN
Corr. = sum of single correction factors of used LISN, cables, switch units (if used)
Linear interpolation will be used for frequencies in between the values in the table.

7.2 ANTENNA R&S HFH2-Z2 (9 KHZ – 30 MHZ)

Frequency	AF HFH-Z2)	Corr.	cable loss 1 (inside chamber)	cable loss 2 (outside chamber)	cable loss 3 (switch unit)	cable loss 4 (to receiver)	distance corr. (-40 dB/ decade)	d_{Limit} (meas. distance (limit)	d_{used} (meas. distance (used)
MHz	dB (1/m)	dB	dB	dB	dB	dB	dB	m	m
0.009	20.50	-79.6	0.1	0.1	0.1	0.1	-80	300	3
0.01	20.45	-79.6	0.1	0.1	0.1	0.1	-80	300	3
0.015	20.37	-79.6	0.1	0.1	0.1	0.1	-80	300	3
0.02	20.36	-79.6	0.1	0.1	0.1	0.1	-80	300	3
0.025	20.38	-79.6	0.1	0.1	0.1	0.1	-80	300	3
0.03	20.32	-79.6	0.1	0.1	0.1	0.1	-80	300	3
0.05	20.35	-79.6	0.1	0.1	0.1	0.1	-80	300	3
0.08	20.30	-79.6	0.1	0.1	0.1	0.1	-80	300	3
0.1	20.20	-79.6	0.1	0.1	0.1	0.1	-80	300	3
0.2	20.17	-79.6	0.1	0.1	0.1	0.1	-80	300	3
0.3	20.14	-79.6	0.1	0.1	0.1	0.1	-80	300	3
0.49	20.12	-79.6	0.1	0.1	0.1	0.1	-80	300	3
0.490001	20.12	-39.6	0.1	0.1	0.1	0.1	-40	30	3
0.5	20.11	-39.6	0.1	0.1	0.1	0.1	-40	30	3
0.8	20.10	-39.6	0.1	0.1	0.1	0.1	-40	30	3
1	20.09	-39.6	0.1	0.1	0.1	0.1	-40	30	3
2	20.08	-39.6	0.1	0.1	0.1	0.1	-40	30	3
3	20.06	-39.6	0.1	0.1	0.1	0.1	-40	30	3
4	20.05	-39.5	0.2	0.1	0.1	0.1	-40	30	3
5	20.05	-39.5	0.2	0.1	0.1	0.1	-40	30	3
6	20.02	-39.5	0.2	0.1	0.1	0.1	-40	30	3
8	19.95	-39.5	0.2	0.1	0.1	0.1	-40	30	3
10	19.83	-39.4	0.2	0.1	0.2	0.1	-40	30	3
12	19.71	-39.4	0.2	0.1	0.2	0.1	-40	30	3
14	19.54	-39.4	0.2	0.1	0.2	0.1	-40	30	3
16	19.53	-39.3	0.3	0.1	0.2	0.1	-40	30	3
18	19.50	-39.3	0.3	0.1	0.2	0.1	-40	30	3
20	19.57	-39.3	0.3	0.1	0.2	0.1	-40	30	3
22	19.61	-39.3	0.3	0.1	0.2	0.1	-40	30	3
24	19.61	-39.3	0.3	0.1	0.2	0.1	-40	30	3
26	19.54	-39.3	0.3	0.1	0.2	0.1	-40	30	3
28	19.46	-39.2	0.3	0.1	0.3	0.1	-40	30	3
30	19.73	-39.1	0.4	0.1	0.3	0.1	-40	30	3

Sample calculation

E (dB µV/m) = U (dB µV) + AF (dB 1/m) + Corr. (dB)
U = Receiver reading
AF = Antenna factor
Corr. = sum of single correction factors of used cables, switch unit, distance correction, amplifier (if applicable)
distance correction = -40 * LOG (d_{Limit}/ d_{used})
Linear interpolation will be used for frequencies in between the values in the table.
Table shows an extract of values

7.3 ANTENNA R&S HL562 (30 MHZ – 1 GHZ)

(d_{Limit} = 3 m)

Frequency	AF R&S HL562	Corr.	cable loss 1 (inside chamber)	cable loss 2 (outside chamber)	cable loss 3 (switch unit)	cable loss 4 (to receiver)	distance corr. (-20 dB/ decade)	d_{Limit} (meas. distance (limit)	d_{used} (meas. distance (used)
MHz	dB (1/m)	dB	dB	dB	dB	dB	dB	m	m
30	18.6	0.6	0.29	0.04	0.23	0.02	0.0	3	3
50	6.0	0.9	0.39	0.09	0.32	0.08	0.0	3	3
100	9.7	1.2	0.56	0.14	0.47	0.08	0.0	3	3
150	7.9	1.6	0.73	0.20	0.59	0.12	0.0	3	3
200	7.6	1.9	0.84	0.21	0.70	0.11	0.0	3	3
250	9.5	2.1	0.98	0.24	0.80	0.13	0.0	3	3
300	11.0	2.3	1.04	0.26	0.89	0.15	0.0	3	3
350	12.4	2.6	1.18	0.31	0.96	0.13	0.0	3	3
400	13.6	2.9	1.28	0.35	1.03	0.19	0.0	3	3
450	14.7	3.1	1.39	0.38	1.11	0.22	0.0	3	3
500	15.6	3.2	1.44	0.39	1.20	0.19	0.0	3	3
550	16.3	3.5	1.55	0.46	1.24	0.23	0.0	3	3
600	17.2	3.5	1.59	0.43	1.29	0.23	0.0	3	3
650	18.1	3.6	1.67	0.34	1.35	0.22	0.0	3	3
700	18.5	3.6	1.67	0.42	1.41	0.15	0.0	3	3
750	19.1	4.1	1.87	0.54	1.46	0.25	0.0	3	3
800	19.6	4.1	1.90	0.46	1.51	0.25	0.0	3	3
850	20.1	4.4	1.99	0.60	1.56	0.27	0.0	3	3
900	20.8	4.7	2.14	0.60	1.63	0.29	0.0	3	3
950	21.1	4.8	2.22	0.60	1.66	0.33	0.0	3	3
1000	21.6	4.9	2.23	0.61	1.71	0.30	0.0	3	3

(d_{Limit} = 10 m)

30	18.6	-9.9	0.29	0.04	0.23	0.02	-10.5	10	3
50	6.0	-9.6	0.39	0.09	0.32	0.08	-10.5	10	3
100	9.7	-9.2	0.56	0.14	0.47	0.08	-10.5	10	3
150	7.9	-8.8	0.73	0.20	0.59	0.12	-10.5	10	3
200	7.6	-8.6	0.84	0.21	0.70	0.11	-10.5	10	3
250	9.5	-8.3	0.98	0.24	0.80	0.13	-10.5	10	3
300	11.0	-8.1	1.04	0.26	0.89	0.15	-10.5	10	3
350	12.4	-7.9	1.18	0.31	0.96	0.13	-10.5	10	3
400	13.6	-7.6	1.28	0.35	1.03	0.19	-10.5	10	3
450	14.7	-7.4	1.39	0.38	1.11	0.22	-10.5	10	3
500	15.6	-7.2	1.44	0.39	1.20	0.19	-10.5	10	3
550	16.3	-7.0	1.55	0.46	1.24	0.23	-10.5	10	3
600	17.2	-6.9	1.59	0.43	1.29	0.23	-10.5	10	3
650	18.1	-6.9	1.67	0.34	1.35	0.22	-10.5	10	3
700	18.5	-6.8	1.67	0.42	1.41	0.15	-10.5	10	3
750	19.1	-6.3	1.87	0.54	1.46	0.25	-10.5	10	3
800	19.6	-6.3	1.90	0.46	1.51	0.25	-10.5	10	3
850	20.1	-6.0	1.99	0.60	1.56	0.27	-10.5	10	3
900	20.8	-5.8	2.14	0.60	1.63	0.29	-10.5	10	3
950	21.1	-5.6	2.22	0.60	1.66	0.33	-10.5	10	3
1000	21.6	-5.6	2.23	0.61	1.71	0.30	-10.5	10	3

Sample calculation

E (dB µV/m) = U (dB µV) + AF (dB 1/m) + Corr. (dB)
U = Receiver reading
AF = Antenna factor
Corr. = sum of single correction factors of used cables, switch unit, distance correction, amplifier (if applicable)
distance correction = -20 * LOG (d_{Limit}/ d_{used})
Linear interpolation will be used for frequencies in between the values in the table.
Tables show an extract of values.

7.4 ANTENNA R&S HF907 (1 GHZ – 18 GHZ)

Frequency	AF R&S HF907	Corr.	cable loss 1 (relay + cable inside chamber)	cable loss 2 (outside chamber)	cable loss 3 (switch unit, atten-uator & pre-amp)	cable loss 4 (to receiver)		
MHz	dB (1/m)	dB	dB	dB	dB	dB		
1000	24.4	-19.4	0.99	0.31	-21.51	0.79		
2000	28.5	-17.4	1.44	0.44	-20.63	1.38		
3000	31.0	-16.1	1.87	0.53	-19.85	1.33		
4000	33.1	-14.7	2.41	0.67	-19.13	1.31		
5000	34.4	-13.7	2.78	0.86	-18.71	1.40		
6000	34.7	-12.7	2.74	0.90	-17.83	1.47		
7000	35.6	-11.0	2.82	0.86	-16.19	1.46		

Frequency	AF R&S HF907	Corr.	cable loss 1 (relay inside chamber)	cable loss 2 (inside chamber)	cable loss 3 (outside chamber)	cable loss 4 (switch unit, atten-uator & pre-amp)	cable loss 5 (to receiver)	used for FCC 15.247
MHz	dB (1/m)	dB	dB	dB	dB	dB	dB	
3000	31.0	-23.4	0.47	1.87	0.53	-27.58	1.33	
4000	33.1	-23.3	0.56	2.41	0.67	-28.23	1.31	
5000	34.4	-21.7	0.61	2.78	0.86	-27.35	1.40	
6000	34.7	-21.2	0.58	2.74	0.90	-26.89	1.47	
7000	35.6	-19.8	0.66	2.82	0.86	-25.58	1.46	

Frequency	AF R&S HF907	Corr.	cable loss 1 (relay inside chamber)	cable loss 2 (High Pass)	cable loss 3 (pre-amp)	cable loss 4 (inside chamber)	cable loss 5 (outside chamber)	cable loss 6 (to receiver)
MHz	dB (1/m)	dB	dB	dB	dB	dB	dB	dB
7000	35.6	-57.3	0.56	1.28	-62.72	2.66	0.94	1.46
8000	36.3	-56.3	0.69	0.71	-61.49	2.84	1.00	1.53
9000	37.1	-55.3	0.68	0.65	-60.80	3.06	1.09	1.60
10000	37.5	-56.2	0.70	0.54	-61.91	3.28	1.20	1.67
11000	37.5	-55.3	0.80	0.61	-61.40	3.43	1.27	1.70
12000	37.6	-53.7	0.84	0.42	-59.70	3.53	1.26	1.73
13000	38.2	-53.5	0.83	0.44	-59.81	3.75	1.32	1.83
14000	39.9	-56.3	0.91	0.53	-63.03	3.91	1.40	1.77
15000	40.9	-54.1	0.98	0.54	-61.05	4.02	1.44	1.83
16000	41.3	-54.1	1.23	0.49	-61.51	4.17	1.51	1.85
17000	42.8	-54.4	1.36	0.76	-62.36	4.34	1.53	2.00
18000	44.2	-54.7	1.70	0.53	-62.88	4.41	1.55	1.91

Sample calculation

E (dB µV/m) = U (dB µV) + AF (dB 1/m) + Corr. (dB)
U = Receiver reading
AF = Antenna factor
Corr. = sum of single correction factors of used cables, switch unit, distance correction, amplifier (if applicable)
Linear interpolation will be used for frequencies in between the values in the table.
Tables show an extract of values.

7.5 ANTENNA EMCO 3160-09 (18 GHZ – 26.5 GHZ)

Frequency	AF EMCO 3160-09	Corr.	cable loss 1 (inside chamber)	cable loss 2 (pre-amp)	cable loss 3 (inside chamber)	cable loss 4 (switch unit)	cable loss 5 (to receiver)
MHz	dB (1/m)	dB	dB	dB	dB	dB	dB
18000	40.2	-23.5	0.72	-35.85	6.20	2.81	2.65
18500	40.2	-23.2	0.69	-35.71	6.46	2.76	2.59
19000	40.2	-22.0	0.76	-35.44	6.69	3.15	2.79
19500	40.3	-21.3	0.74	-35.07	7.04	3.11	2.91
20000	40.3	-20.3	0.72	-34.49	7.30	3.07	3.05
20500	40.3	-19.9	0.78	-34.46	7.48	3.12	3.15
21000	40.3	-19.1	0.87	-34.07	7.61	3.20	3.33
21500	40.3	-19.1	0.90	-33.96	7.47	3.28	3.19
22000	40.3	-18.7	0.89	-33.57	7.34	3.35	3.28
22500	40.4	-19.0	0.87	-33.66	7.06	3.75	2.94
23000	40.4	-19.5	0.88	-33.75	6.92	3.77	2.70
23500	40.4	-19.3	0.90	-33.35	6.99	3.52	2.66
24000	40.4	-19.8	0.88	-33.99	6.88	3.88	2.58
24500	40.4	-19.5	0.91	-33.89	7.01	3.93	2.51
25000	40.4	-19.3	0.88	-33.00	6.72	3.96	2.14
25500	40.5	-20.4	0.89	-34.07	6.90	3.66	2.22
26000	40.5	-21.3	0.86	-35.11	7.02	3.69	2.28
26500	40.5	-21.1	0.90	-35.20	7.15	3.91	2.36

Sample calculation

E (dB µV/m) = U (dB µV) + AF (dB 1/m) + Corr. (dB)
U = Receiver reading
AF = Antenna factor
Corr. = sum of single correction factors of used cables, switch unit, distance correction, amplifier (if applicable)
Linear interpolation will be used for frequencies in between the values in the table.
Table shows an extract of values.

7.6 ANTENNA EMCO 3160-10 (26.5 GHZ – 40 GHZ)

Frequency	AF EMCO 3160-10	Corr.	cable loss 1 (inside chamber)	cable loss 2 (outside chamber)	cable loss 3 (switch unit)	cable loss 4 (to receiver)	distance corr. (-20 dB/ decade)	d_{Limit} (meas. distance (limit)	d_{used} (meas. distance (used)
GHz	dB (1/m)	dB	dB	dB	dB	dB	dB	m	m
26.5	43.4	-11.2	4.4				-9.5	3	1.0
27.0	43.4	-11.2	4.4				-9.5	3	1.0
28.0	43.4	-11.1	4.5				-9.5	3	1.0
29.0	43.5	-11.0	4.6				-9.5	3	1.0
30.0	43.5	-10.9	4.7				-9.5	3	1.0
31.0	43.5	-10.8	4.7				-9.5	3	1.0
32.0	43.5	-10.7	4.8				-9.5	3	1.0
33.0	43.6	-10.7	4.9				-9.5	3	1.0
34.0	43.6	-10.6	5.0				-9.5	3	1.0
35.0	43.6	-10.5	5.1				-9.5	3	1.0
36.0	43.6	-10.4	5.1				-9.5	3	1.0
37.0	43.7	-10.3	5.2				-9.5	3	1.0
38.0	43.7	-10.2	5.3				-9.5	3	1.0
39.0	43.7	-10.2	5.4				-9.5	3	1.0
40.0	43.8	-10.1	5.5				-9.5	3	1.0

Sample calculation

E (dB µV/m) = U (dB µV) + AF (dB 1/m) + Corr. (dB)
U = Receiver reading
AF = Antenna factor
Corr. = sum of single correction factors of used cables, switch unit, distance correction, amplifier (if applicable)
Linear interpolation will be used for frequencies in between the values in the table.
distance correction = -20 * LOG (d_{Limit}/ d_{used})
Linear interpolation will be used for frequencies in between the values in the table.
Table shows an extract of values.

8 MEASUREMENT UNCERTAINTIES

Test Case(s)	Parameter	Uncertainty
- Field strength of spurious radiation	Field Strength	± 5.5 dB
- Emission and Occupied Bandwidth	Power Frequency	± 2.9 dB ± 11.2 kHz
- RF Output Power - Peak to Average Ratio	Power	± 2.2 dB
- Band Edge Compliance - Spurious Emissions at Antenna Terminal	Power Frequency	± 2.2 dB ± 11.2 kHz
- Frequency Stability	Frequency	± 25 Hz

The measurement uncertainties for all parameters are calculated with an expansion factor (coverage factor) k = 1.96. This means, that the true value is in the corresponding interval with a probability of 95 %.

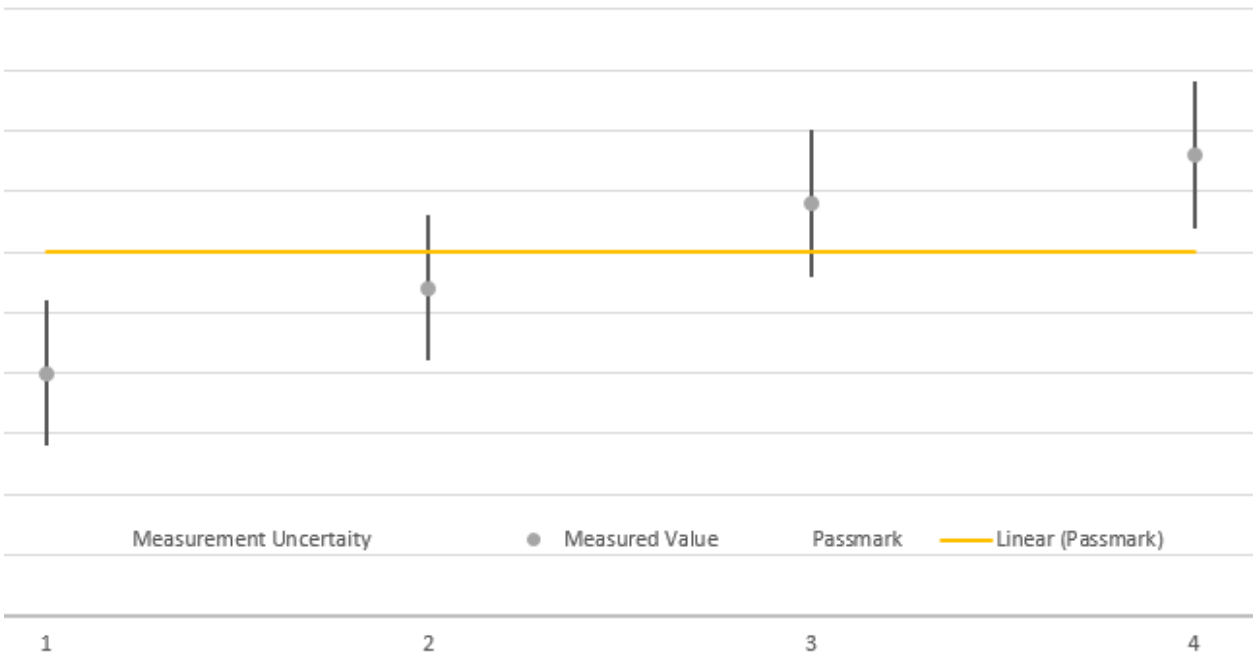

The verdicts in this test report are given according the above diagram:

Case	Measured Value	Uncertainty Range	Verdict
1	below pass mark	below pass mark	Passed
2	below pass mark	within pass mark	Passed
3	above pass mark	within pass mark	Failed
4	above pass mark	above pass mark	Failed

That means, the laboratory applies, as decision rule (see ISO/IEC 17025:2017), the so called shared risk principle.

9 PHOTO REPORT

Please see separate photo report.