blacklinesafety

Alert. Locate. Respond.

G7 Bridge Model 103989 Antenna Compliance with Cellular Module Integration Requirements

1 Document Revision History

Revision	Date	Author	Summary
1	June 3, 2021	Scott Jacobsen	Initial Release
2	Jan 31, 2024	Scott Jacobsen	Update for LARA-R6001D

2 Purpose of this Report

The purpose of this report is to show the radio frequency (RF) exposure compliance of the cellular module integration on G7 Bridge Model 103989

3 Identifiers

3.1 Host Product

Product Name: G7 Bridge
Model: 103989

3.2 Module Identifiers

Module Description	Model	FCC ID	IC ID	Grantee
Cellular	LARA-R6001D	XPYUBX21BE01	8595A-UBX21BE01	u-blox AG

3.3 Antennas

Frequency Band	Vendor	Model	Peak Gain(dBi)	Data Sheet Reference
Cellular	Blackline Safety	PCB Trace	See section 3.5	

3.4 Module Grant Requirements – XPYUBX21BE01

Output power listed is conducted. Single Modular Approval. The module antenna must be installed to meet the RF exposure compliance separation distance of 20 cm. For mobile and fixed operating configurations the antenna gain, including cable loss, must not exceed

3.9dBi at GSM850;

4.5dBi at GSM1900;

9.9dBi at FDD Band 2;

9.5dBi at FDD LTE Band 2;

6.0dBi at FDD LTE Band 4;

10.4dBi at FDD Band 5 and FDD LTE Bands 5 and 26;

10.3dBi at FDD LTE Band 7;

10.2dBi at FDD LTE Band 13;

9.7dBi at FDD LTE Band 12; and

10.8dBi at FDD LTE Band 8;

9.1dBi at TDD LTE Band 38;

8.8dBi at TDD LTE Band 41.

Integration not consistent with these conditions will entail additional testing and authorization process. Co-location of this module with other transmitters that operate simultaneously are required to be evaluated using the FCC multi-transmitter procedures.

Host integrators must be provided with antenna installation instructions and transmitter operating conditions to satisfy RF exposure compliance. Host integrator is responsible for complying with the instructions and requirements for each transmitter they choose to integrate into a host product.

This device supports bandwidth modes of 1.4, 3, 5, 10, 15 and 20 MHz for FDD LTE Bands 2 and 4; bandwidth modes of 5, 10, 15 and 20 MHz for FDD LTE Band 7 and TDD LTE Bands 38 and 41; bandwidth modes of 1.4, 3, 5 and 10 MHz for FDD LTE Bands 5, 12 and 26; bandwidth modes of 5 and 10 MHz for FDD LTE Band 13 and bandwidth modes of 1.4 and 3 MHz for FDD LTE Band 8.

3.5 Comparison of Antenna Gain with Module Requirements

Requirement Maximum Gain	Band	Measured Actual Gain	Frequency
9.7 dBi	FDD LTE Band 12	-3.3 dBi	700 MHz
9.7 dBi	FDD LTE Band 12	-3.5 dBi	707 MHz
9.7 dBi	FDD LTE Band 12	-3.7 dBi	715 MHz
10.2 dBi	FDD LTE Band 13	-3.3 dBi	780 MHz
10.2 dBi	FDD LTE Band 13	-3.3 dBi	784 MHz
3.9 dBi	GSM850	-2.8 dBi	826 MHz
3.9 dBi	GSM850	-3.0 dBi	837 MHz
3.9 dBi	GSM850	-3.1 dBi	847 MHz
10.4 dBi	FDD Band 5 and FDD LTE Bands 5 and 26	-2.8 dBi	826 MHz
10.4 dBi	FDD Band 5 and FDD LTE Bands 5 and 26	-3.0 dBi	837 MHz
10.4 dBi	FDD Band 5 and FDD LTE Bands 5 and 26	-3.1 dBi	847 MHz
10.8 dBi	FDD LTE Band 8	-2.1 dBi	899 MHz
6.0 dBi	FDD LTE Band 4	-0.9 dBi	1710 MHz
6.0 dBi	FDD LTE Band 4	-1.5 dBi	1730 MHz
6.0 dBi	FDD LTE Band 4	-1.8 dBi	1750 MHz

4.5 dBi	GSM1900	-1.0 dBi	1850 MHz
4.5 dBi	GSM1900	-0.8 dBi	1880 MHz
4.5 dBi	GSM1900	-1.1 dBi	1910 MHz
9.9 dBi	FDD Band 2	-1.0 dBi	1850 MHz
9.9 dBi	FDD Band 2	-0.8 dBi	1880 MHz
9.9 dBi	FDD Band 2	-1.1 dBi	1910 MHz
9.5 dBi	FDD LTE Band 2	-1.0 dBi	1850 MHz
9.5 dBi	FDD LTE Band 2	-0.8 dBi	1880 MHz
9.5 dBi	FDD LTE Band 2	-1.1 dBi	1910 MHz
10.3 dBi	FDD LTE Band 7	0.8 dBi	2500 MHz
10.3 dBi	FDD LTE Band 7	0.6 dBi	2530 MHz
10.3 dBi	FDD LTE Band 7	0.4 dBi	2560 MHz
9.1 dBi	TDD LTE Band 38	0.3 dBi	2570 MHz
9.1 dBi	TDD LTE Band 38	0.2 dBi	2590 MHz
9.1 dBi	TDD LTE Band 38	0.1 dBI	2610 MHz
8.8 dBi	TDD LTE Band 41	0.8 dBi	2500 MHz
8.8 dBi	TDD LTE Band 41	0.2 dBi	2590 MHz
8.8 dBi	TDD LTE Band 41	-0.1 dBi	2680 MHz

3.6 Sample Radiation Patterns

Total Radiated power: -2.72 dBm
Efficiency -2.72 dB

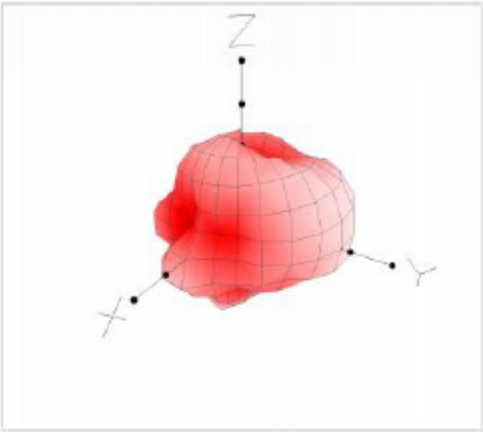

Vertical Polarization

Vert. Component: -4.40 dBm

Peak Gain: 1.08 dBi
Theta 105, Phi 150 deg

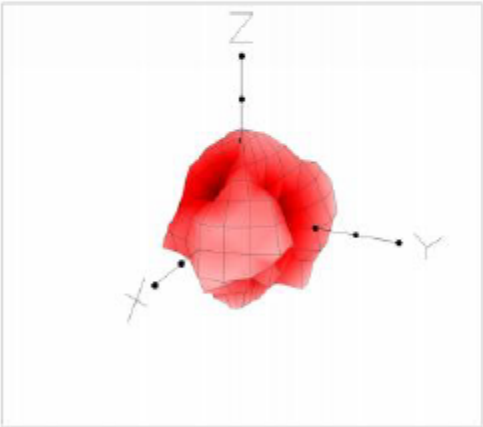

Horizontal Polarization

Horz. Component: -7.66 dBm

Peak Gain: -0.69 dBi
Theta 90, Phi 150 deg

File Name: Ant1 high freq2 2110

Tx Power: 0.00 dBm **Estimated**
Frequency: 2110.00 MHz
Cable Attenuation: 14.10 dB
Notes:

Wed, Mar 31, 2021 7:24 PM
Receive Antenna Gain: 2.15 dBi
Separation: 1.28 m

3.7 Antenna Measurement Assembly

3.8 Test Setup Pictures

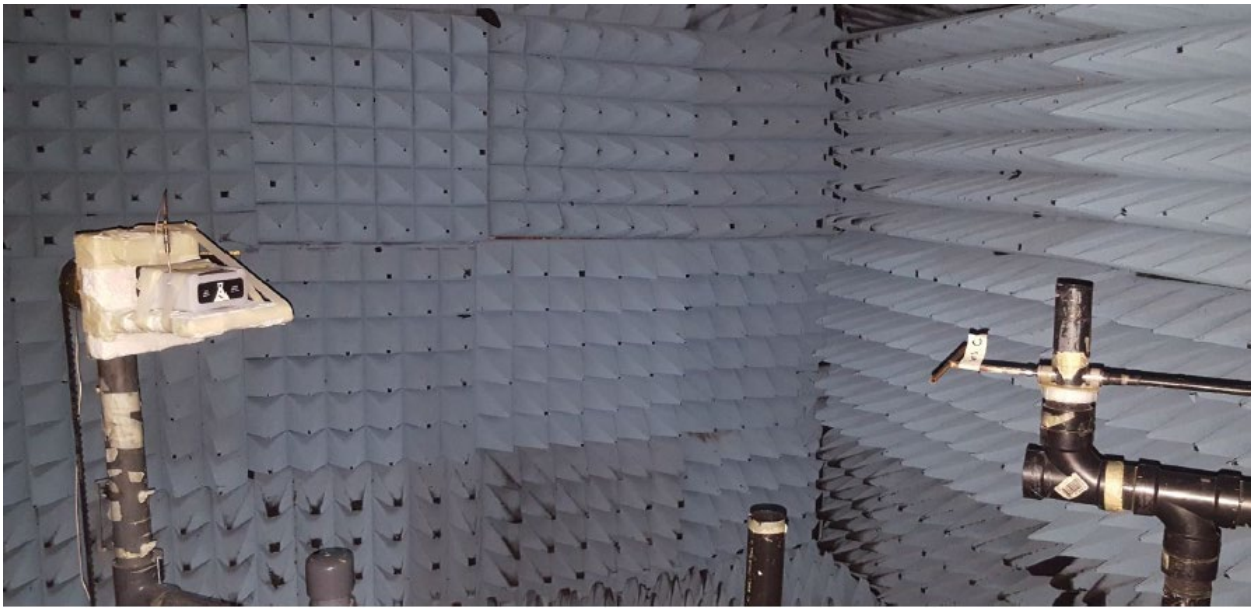

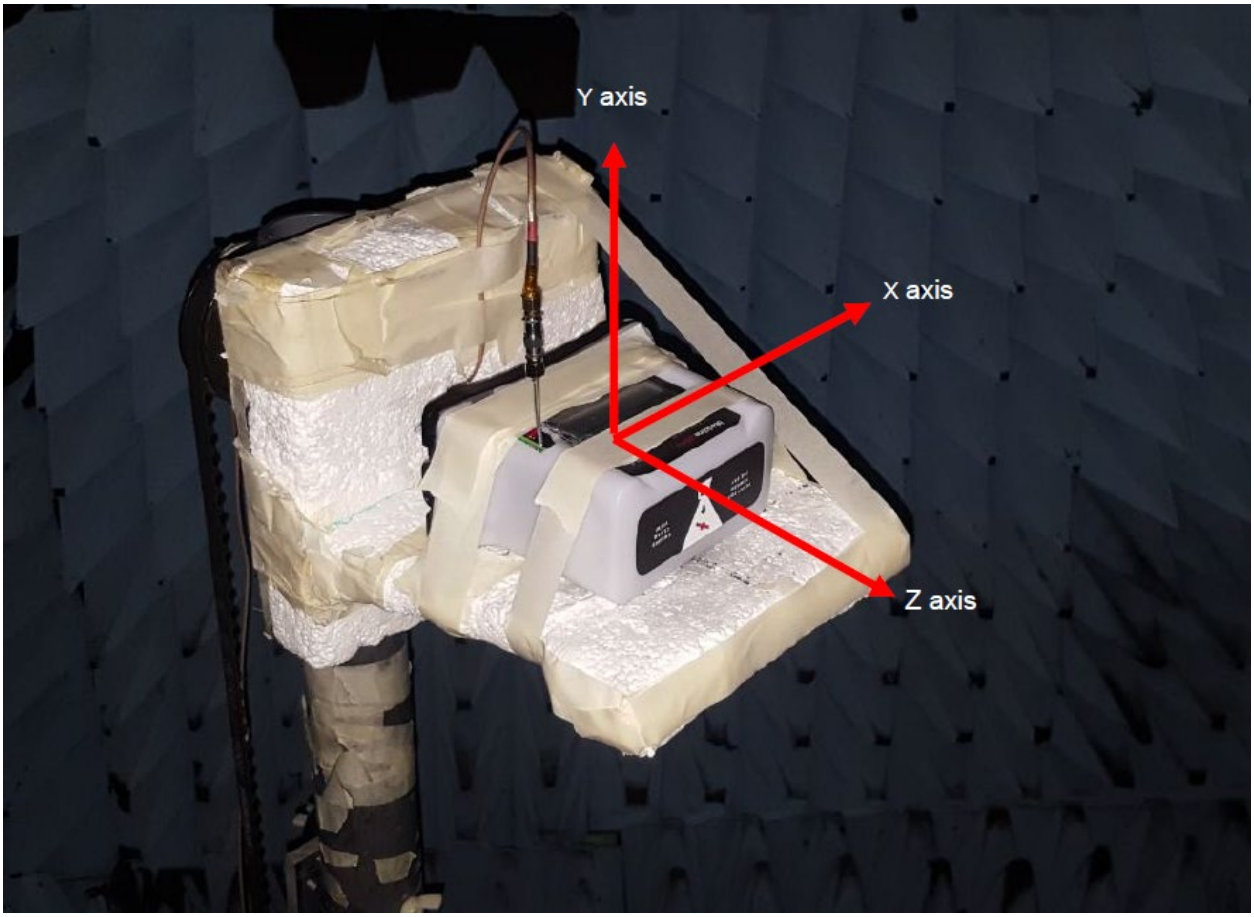

4 Statement of Compliance

The gain values found for Blackline cellular antenna in G7 Bridge Model 103989 are below the maximum allowed levels according to module integration requirements.

SPECIFICATION
Iridium Certified

Part No. : **IP.1621.25.4.A.02**

Product Name : **4mm thick Iridium Patch Antenna, 1621MHz**

Features : 25mm*25mm*4mm
ROHS Compliant

:

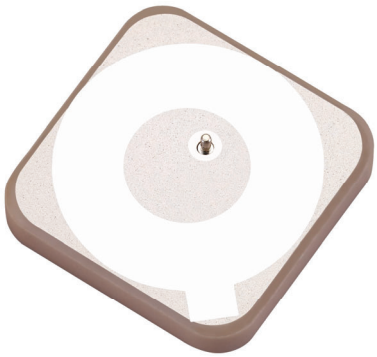

1. Introduction

This miniaturized ceramic Iridium patch antenna is based on smart ***XtremeGain™*** technology. It is mounted via pin and double-sided adhesive and has been selected as optimal solution for the customer device environment. Iridium certifies the IP.1621.25.4.A.02 for commercial use in connection with the Iridium Communications systems.

2. Key Antenna Performance Indicators

Original Patch Specification tested on 50*50mm ground plane

No	Parameter	Specification	Notes
1	Range of Receiving Frequency	1616~1626.5Mhz	
2	Center Frequency	1621MHz ±3MHz	with 50*50mm GND Plane
3	Bandwidth	16MHz	Return Loss ≤-10dB
4	VSWR	1.5 max	Center Frequency
5	Gain at Zenith	+2.0dBi typ.	Center Frequency
6	Gain at 10° Elevation	--	Center Frequency
7	Axial Ratio	3 dB Max	Center Frequency
8	Polarization	RHCP	
9	Impedance	50Ω	
10	Frequency Temp Coefficient (Tf)	0±20ppm/°C	-40°C to +85°C
11	Operating Temperature	-40°C to +85°C	
12	Antenna Weight	10g	

3. Mechanical Specifications

3.1 Shape and Dimension

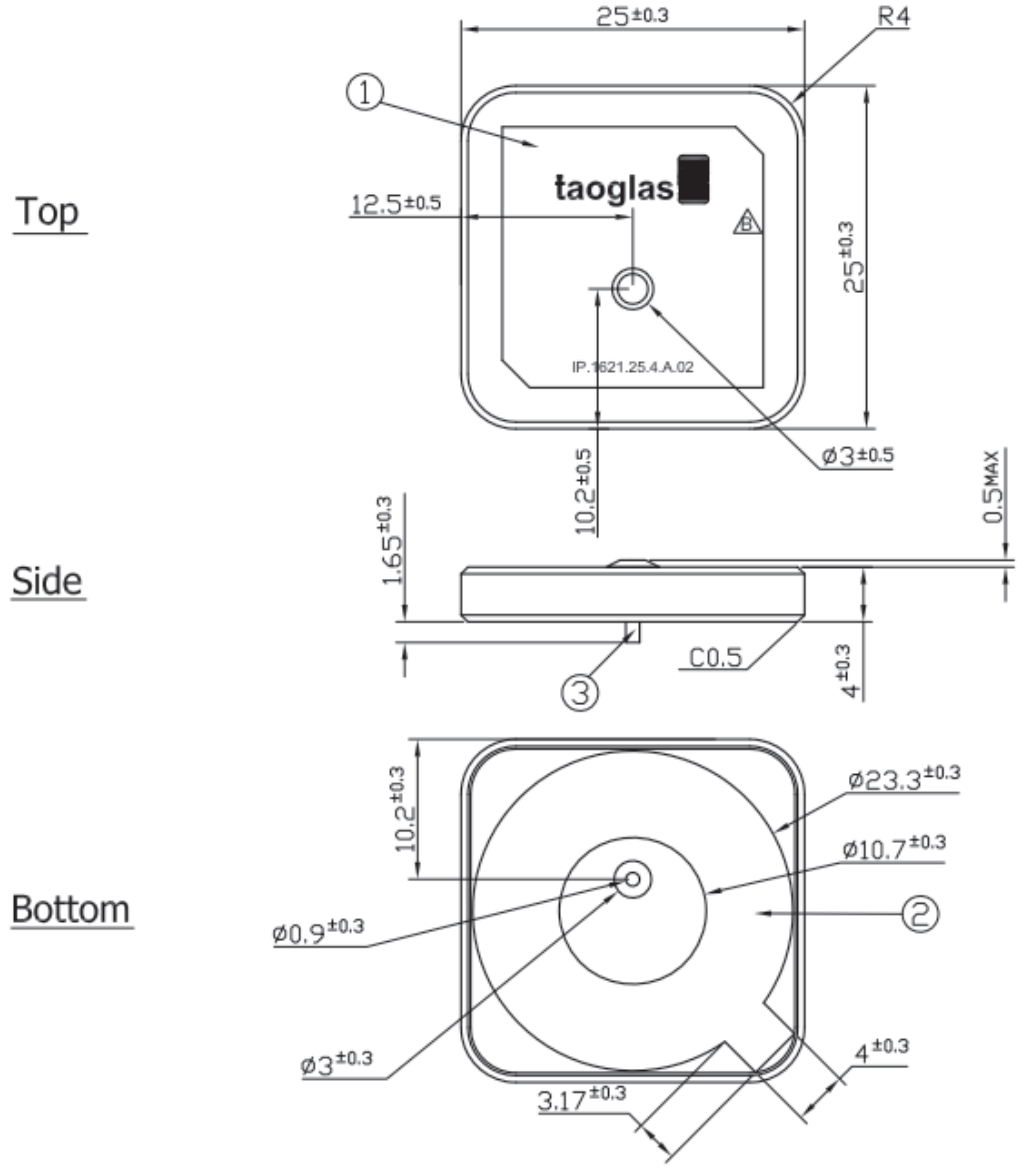

	Name	Material	Finish	QTY
1	IP.25A Iridium Patch (25x25x4mm)	Ceramic	Clear	1
2	Double sided Adhesive	NITTO 5015	White Liner	1
3	Pin	Brass	Tin Plated	1

3.2 Layout

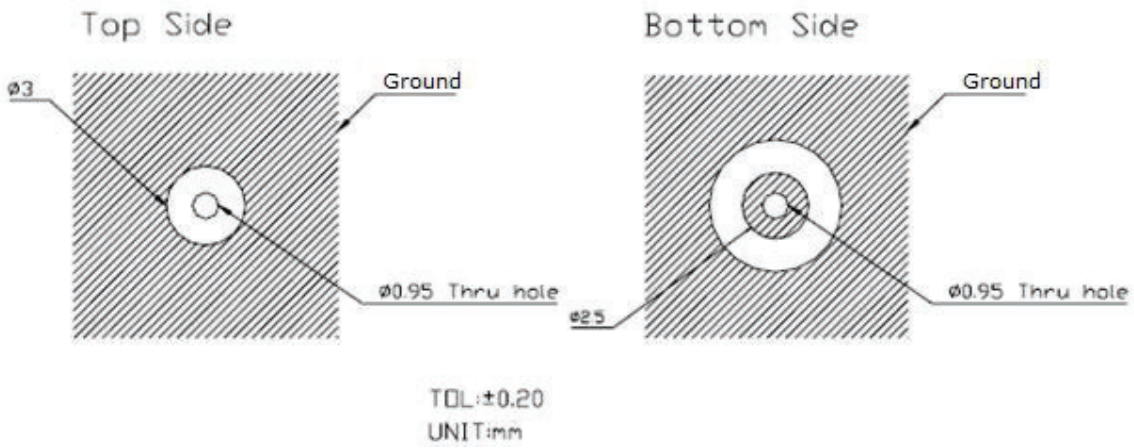

3.3 Mark

3.4Test Jig and Dimensions

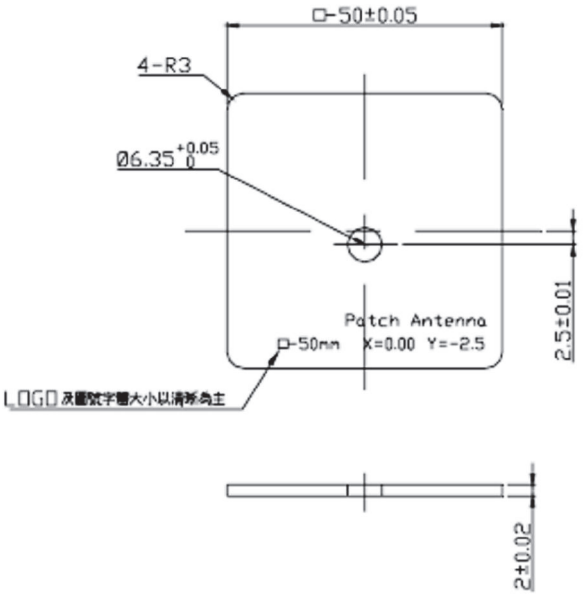

3.5 Test Fixture Antenna Setup and Measurements

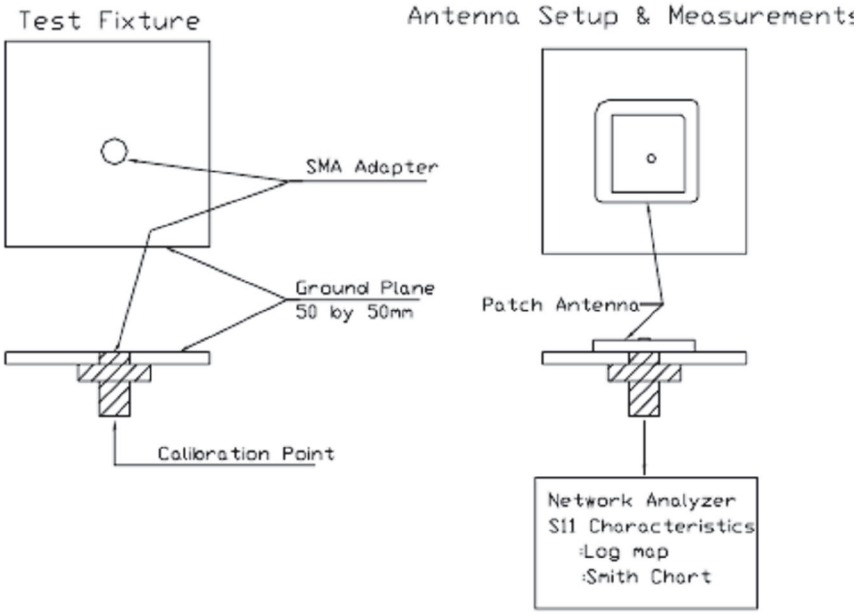

4. Performance testing and results

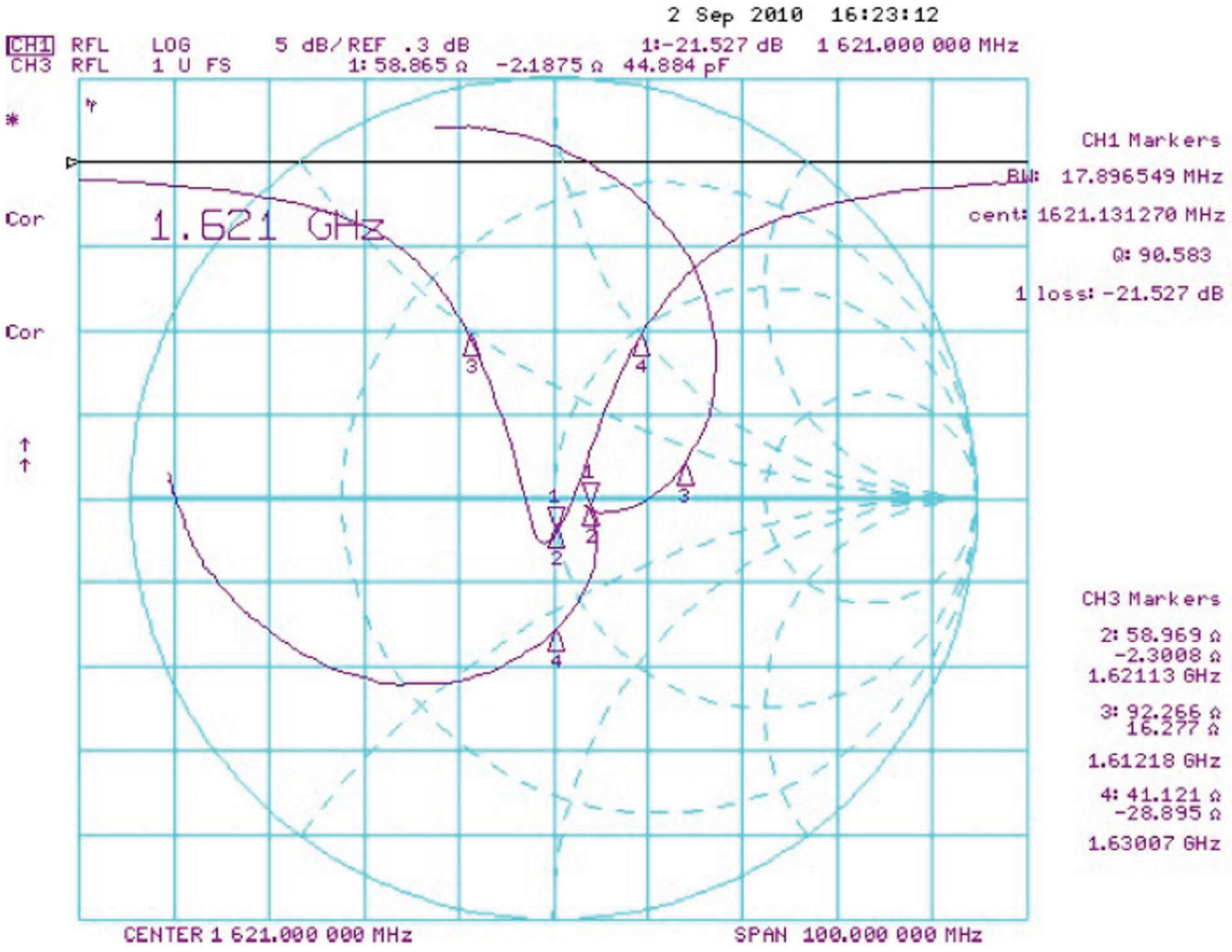

Antenna Gain Chart

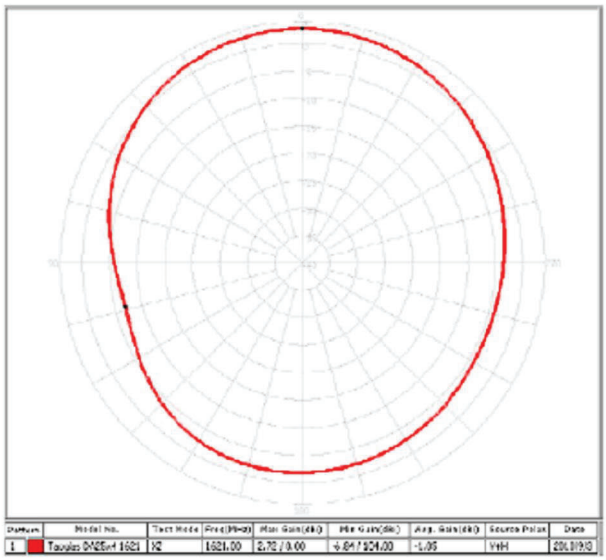

XZ-Plane

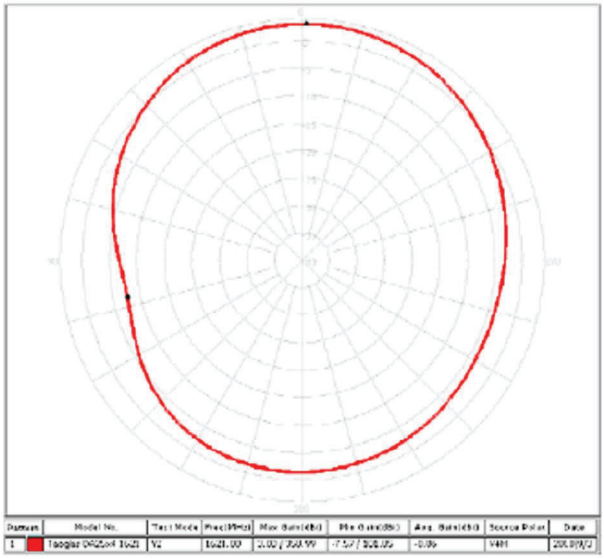

YZ-Plane

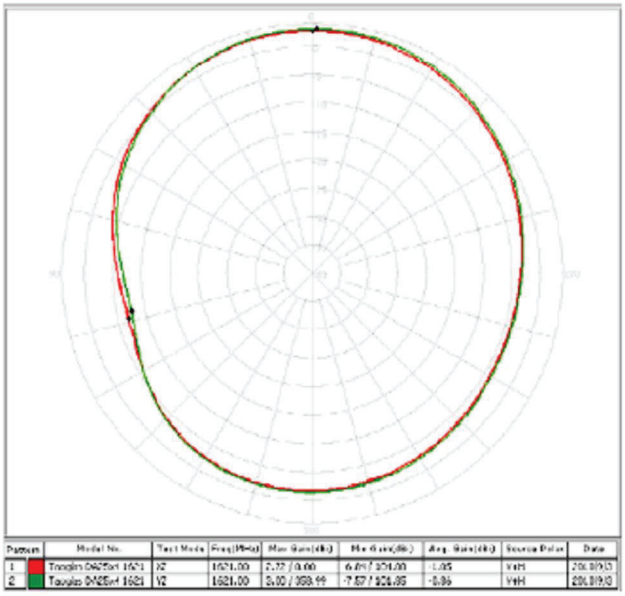

XZ+YZ-Plane

Plane	Max Gain(dBi)	Min Gain(dBi)	Avg. Gain(dBi)
XZ	2.72/1.00	-6.84/104	-1.05
YZ	3.00/358.99	-7.57/101.85	-0.86

Axial Ratio

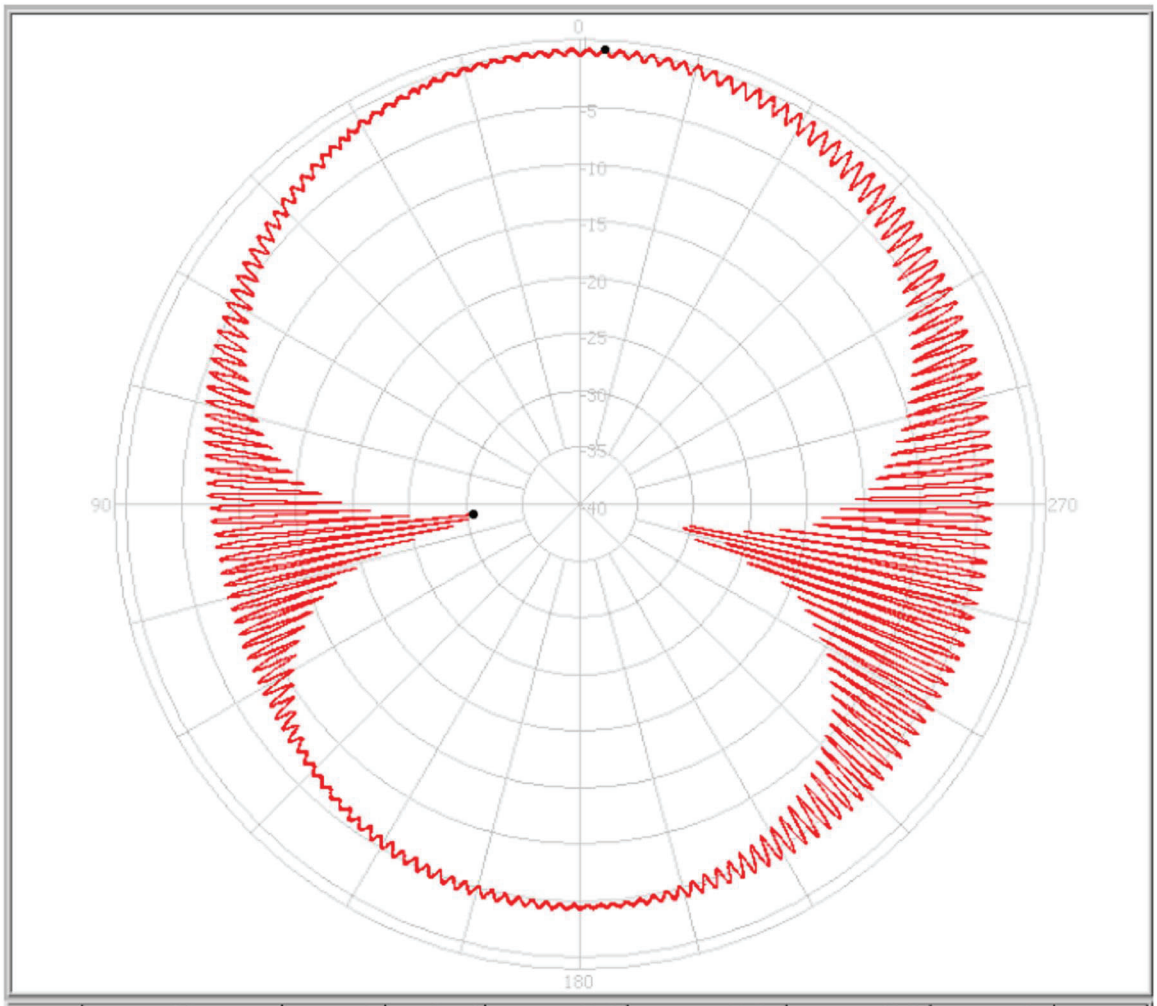

Pattern		Model No.	Test Mode	Freq(MHz)	Max Gain(dBi)	Min Gain(dBi)	Avg. Gain(dBi)	Source Polar.	Date
1		Taoglas DA25x4 1621	Axial Ratio	1621.00	0.13 / 356.87	-30.61 / 95.76	-4.00	CP	2010/9/2

5. Packaging

- Per Tray: 50 pieces
- Per Carton(Inside Box) – 4 Trays = 200 pieces
- Outer Carton (Outside Box)– 4 Cartons = 800 pieces

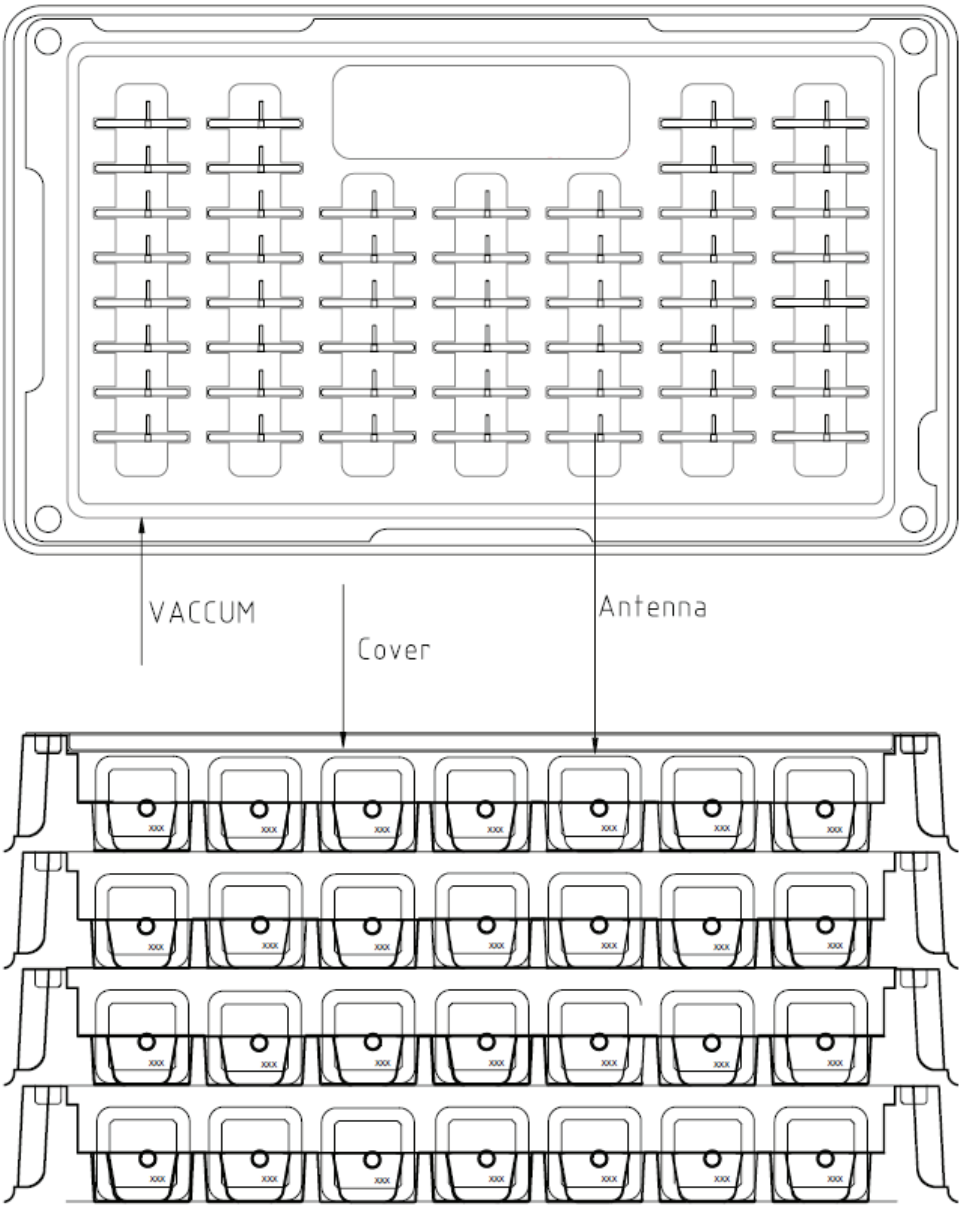

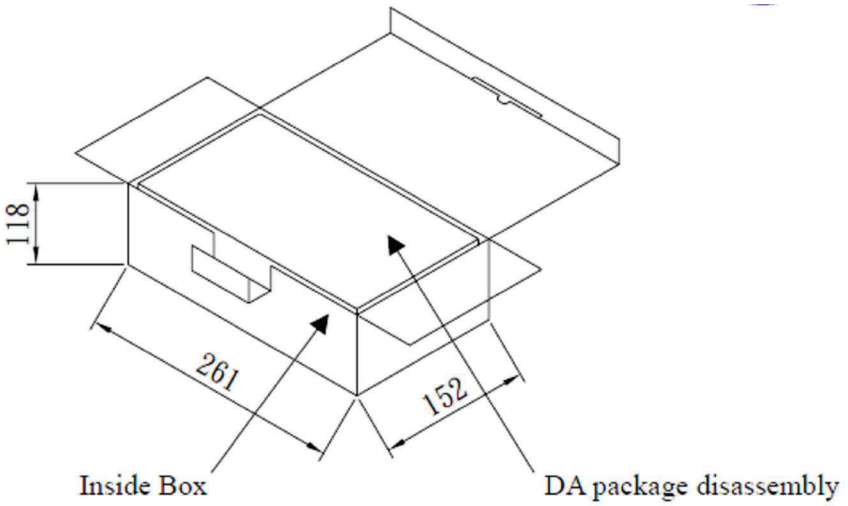

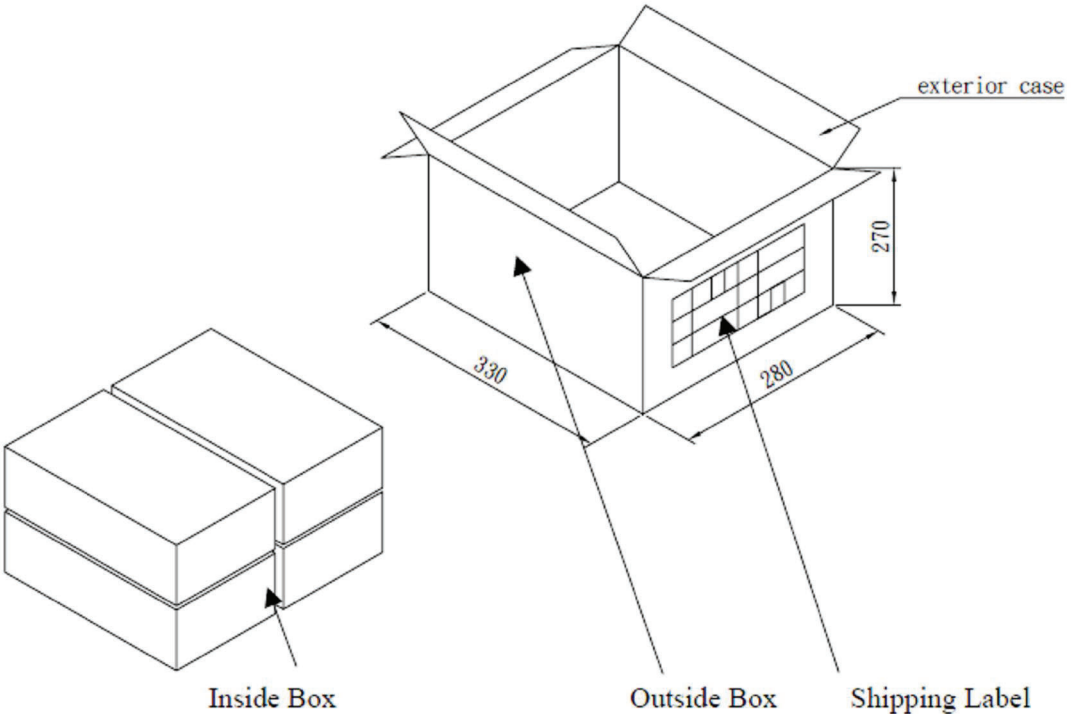

Taoglas makes no warranties based on the accuracy or completeness of the contents of this document and reserves the right to make changes to specifications and product descriptions at any time without notice. Taoglas reserves all rights to this document and the information contained herein. Reproduction, use or disclosure to third parties without express permission is strictly prohibited. Copyright © 2012, Taoglas Ltd.

Murandi
Communications Ltd.
Innovative Radio Frequency Solutions

MLink Antenna Specification

Revision – Draft

Feb 10, 2014

Murandi Communications Ltd.
106, 4715 - 13th St. NE, Calgary, Alberta, Canada, T2E 6M3
Tel: (403) 777-9988 email murandi@murandi.com
Fax: (403) 777-9989 www.murandi.com
Confidential and Proprietary

Table of Contents

1 REVISION HISTORY 2
2 ABBREVIATIONS 2
3 REFERENCE DOCUMENTS 3
4 INTRODUCTION 3
5 ANTENNA SPECIFICATION 3
6 REVISIONS 4

1 Revision History

Revision	Date	Description
Draft	Feb 10, 2014	Initial release

The details of each revision are captured in Revision Details Section 6.

2 Abbreviations

Abbreviation	Description
Attn	attenuator
BW	bandwidth
dB	decibel
dBc	decibel relative to carrier power
dBi	decibel relative to an isotropic antenna
dBm	decibel relative to 1 milliwatt
FCC	federal communications commission
FHSS	frequency hopping spread spectrum
GPS	global positioning system
IC	Industry Canada
ISM	industrial, scientific and medical
ISR	interrupt service routine
kHz	kilohertz
LCD	liquid crystal display
LED	light emitting diode
LNA	low noise amplifier
mA	milliampere
mcd	millicandle
MHz	mega-hertz
mm	millimeter
msec	millisecond
mV	millivolt
PA	power amplifier
PLL	phase locked loop
ppm	parts per million
RBW	resolution bandwidth
RF	radio frequency
RTC	Real time clock

Abbreviation	Description
TBC	to be confirmed
TBD	to be determined
TRP	total radiated power
µA	microampere
TDD	Time division duplex
UART	universal asynchronous receiver/transmitter
V	volts
W	width

3 Reference Documents

1. MLink Circuit Description – Draft, Feb 10, 2014
2. MLink Block Diagrams – Draft, Feb 10, 2014
3. Schematics (MLINK – Rev 3.pdf)
4. Bill of Materials (MLINK – Rev 3.bom)
5. Pictures (IMG_1673.jpg, IMG_1677.jpg, IMG_1680.jpg, IMG_1682.jpg, IMG_1684.jpg, & IMG_1695.jpg)

4 Introduction

This document contains Antenna Specifications for the Murandi Communications MLink 900 MHz transceiver as part of the FCC & IC submission.

5 Antenna Specification

MLink 900 integral antenna performance was measured in the following orientation:

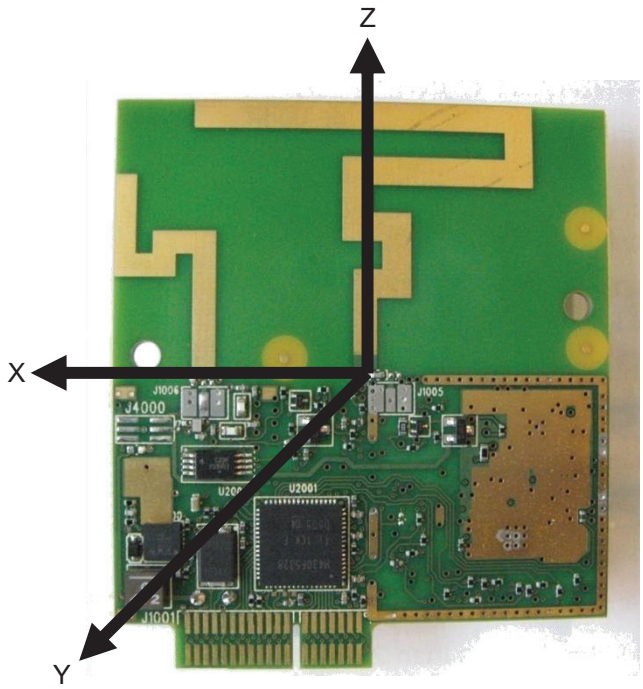

The following results obtained:

Murandi
Communications Ltd.
Innovative Radio Frequency Solutions

Total Radiated power: -0.41 dBm
Efficiency -0.11 dB

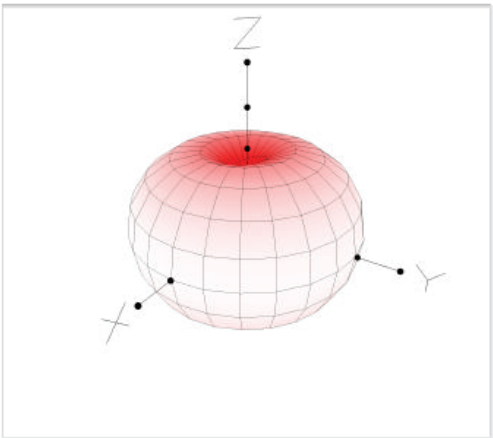

Vertical Polarization

Vert. Component: -0.43 dBm

Peak Gain: 2.14 dBi
Theta 90, Phi 285

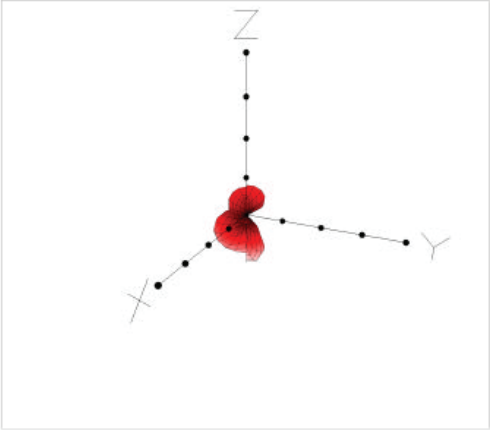

Horizontal Polarization

Horz. Component: -23.26 dBm

Peak Gain: -14.22 dBi
Theta 165, Phi 75

File Name: MLink 65558 33pF 915MHz with 2AA cells extender

Tx Power: -0.30 dBm	**Estimated**	**Fri, Nov 15, 2013 12:29 PM**
Frequency: 915.50 MHz		**Receive Antenna Gain: 1.65 dBi**
Cable Attenuation: 1.45 dB		**Separation: 1.20 m**

Notes:

The peak antenna gain is 2.4 dBi in the vertical polarization.

6 Revisions