Korea Standard Quality Laboratory
#102, Jangduk-dong, Hwasung-si, Gyeonggi-do, 445-855, Korea
Tel : +82-31-356-7333 FAX : +82-31-356-7303 Homepage : www.ksq.kr

CONFORMANCE TEST REPORT

FCC Part 15 Subpart B

Report No.	:	KSQ-FCC150403
Date of Issue	:	April 09, 2015
Model / Type No.	:	HD-W300T
FCC ID	:	XQ8HD-W300T
IC ID	:	11273A-HDW300T
Varient Model / Type No.	:	N/A
Kind of Product	:	Wireless Full HD Sender Transmitter
Applicant Name	:	I DO IT Co., Ltd.
Applicant Address	:	#637, Smart-Hub Industry-University Convergence Center, 237 Sangidaehak-ro, Siheung-si, Gyeonggi-do, Korea(429-793)
Manufacturer Name	:	I DO IT Co., Ltd.
Manufacturer Address	:	#637, Smart-Hub Industry-University Convergence Center, 237 Sangidaehak-ro, Siheung-si, Gyeonggi-do, Korea(429-793)
Received Date	:	December 17, 2014
Test Period	:	Start : April 02, 2015 End : April 03, 2015
Test Result	:	■ In Compliance ☐ Not in Compliance
Applicable Standard	:	ANSI C63.4-2009 ICES-003

Test by

Reviewed By

Won-Sang, Yoon
EMC Test Engineer

Young-Ryul, Jo
EMC Technical Manager

This Report shall not be reproduced except in full without the written approval of KSQ

TABLE OF CONTENTS

1. Calibration Detail of Equipment Used for Measurement 3
2. Laboratory Information 3
3. General Product Description 4
4. Device Modification 4
5. EUT Configuration(s) 5
6. EUT Operating Mode(s) 6
7. Configurationm of Test System 6
8. Measurement Uncertainty 7
9. Emission Test Regulations 8
10. Conducted Disturbance Voltage 9
11. Radiated Electric Field Emissions 10

APPENDIX A - Test Setup Photographs 11
APPENDIX B - Test Data 13
APPENDIX C - EUT Photographs 30

This Report shall not be reproduced except in full without the written approval of KSQ

1. Calibration Detail of Equipment Used for Measurement

Test equipment and test accessories are calibrated on regular basis. The maximum time calibrations is one year is recommended by the manufacturer, whichever is less. All test equipment calibrations are traceable to the Korea Research Institute of Standards and Science (KRISS), therefore, all test data recorded in this report is traceable to KRISS.

2. Laboratory Information

-.Address

Korea Standard Quanity Laboratory

#102, Jangduk-dong, Hwasung-si, Gyeonggi-do, 445-855, Korea

Tel : +82-31-356-7333

FAX : +82-31-356-7303

Homepage : www.ksq.kr

-. Laboratory Acceditations and Listings

FCC Registration No. : 100384

KCC Registration No. : KR0024

This Report shall not be reproduced except in full without the written approval of KSQ

3. General Product Description

3.1 Tested Equipment

■ Unless otherwise indicated, all test were conducted on Model HD-W300T.

3.2 Equipment Size, Mobility and Identification

Dimensions : 195(H) x 28(W) x 103(D) cm

Weight : 250 g

Mobility : ☐ Hand-held ■ Table-top ☐ Built-in

☐ Traveling ☐ Floor-standing

Serial No. : Prototype

3.3 Electrical Ratings or Specification

Input : AC 100-240 V, 50/60 Hz, 0.8A MAX (Adapter)

Video Decoder : H.264 Baseline Profile, Main High Profile.

Up to Full HD 1920 x 1080

Video Encoder : H.264 Baseline Profile, Constrained Baseline Profile.

Up to Full HD 1920 x 1080

WiFi Connection : Auto Scan / Pairing

Video Resolutions : 480p, 720p, 1080i/p (30/60fps)

Wireless Standard : IEEE 802.11n compliant

Frequency : 5.150 ~ 5.350 GHz, 5.725 ~ 5.850 GHz

3.4 Test Voltage and Frequency

Unless indicated otherwise on the indicidual data sheet or test result, the test voltage and frequency was as indicated below.

Voltage : 120 Vac

Frequency : 50 Hz

4. Device Modifications

Amendments of Product : 1.Inside varnish paint

2.Inside attach EMI Shielding Gaskets

This Report shall not be reproduced except in full without the written approval of KSQ

5. EUT Configuration(s)

See Appendix A for individual test set-up configuration(s). The following peripheral devices and/or interface cable were connected during the measurement:

■ Peripheral Devices

Description	Model Number	Serial Number	Manufacturer
Wireless Full HD Sender Receiver	HD-W300R	-	I DO IT Co., Ltd.
Adapter1	CW1202000	-	-
Adapter2	CW1202000	-	-
Notebook	VOSTRO 3350	-	DELL
Adapter3	LA65NE1-01	-	DongguangLitePower2ndPlant
Monitor	W2453VQV	-	LG
Remote Control	-	-	I DO IT Co., Ltd.
IR-Flasher	-	-	I DO IT Co., Ltd.
USB Memory	-	-	Sandisk

■ Cable Description

#	Description	Length (m)	Ferrite Core	Other Details
1	HDMI1	1.5	Y	From EUT To Notebook
2	HDMI2	1.5	Y	From Wireless Full HD Sender Receiver To Monitor
3	IR-OUT	1.4	N	-
4	LAN	10	N	From EUT To Wireless Full HD Sender Receiver
5	AUDIO1	1.2	N	From EUT To Notebook
6	AUDIO2	1.2	N	From Wireless Full HD Sender Receiver To Monitor
7	USB	0	-	From EUT To USB Memory
8	D-SUB	1.3	Y	From EUT To Notebook
9	COMPONENT	1.2	N	From Wireless Full HD Sender Receiver To Monitor
10	AV	1.4	N	From Wireless Full HD Sender Receiver To Monitor

This Report shall not be reproduced except in full without the written approval of KSQ

6. EUT Operating Mode(s)

EUT was under test was operated during the measurement under the following conditions:

☐ Standby
☐ Scrolling 'H'
☐ Display circles patern
☐ Resd / Write
■ Practice operation - Operating Mode

7. Configuration of Test System

< Wireless Mode >

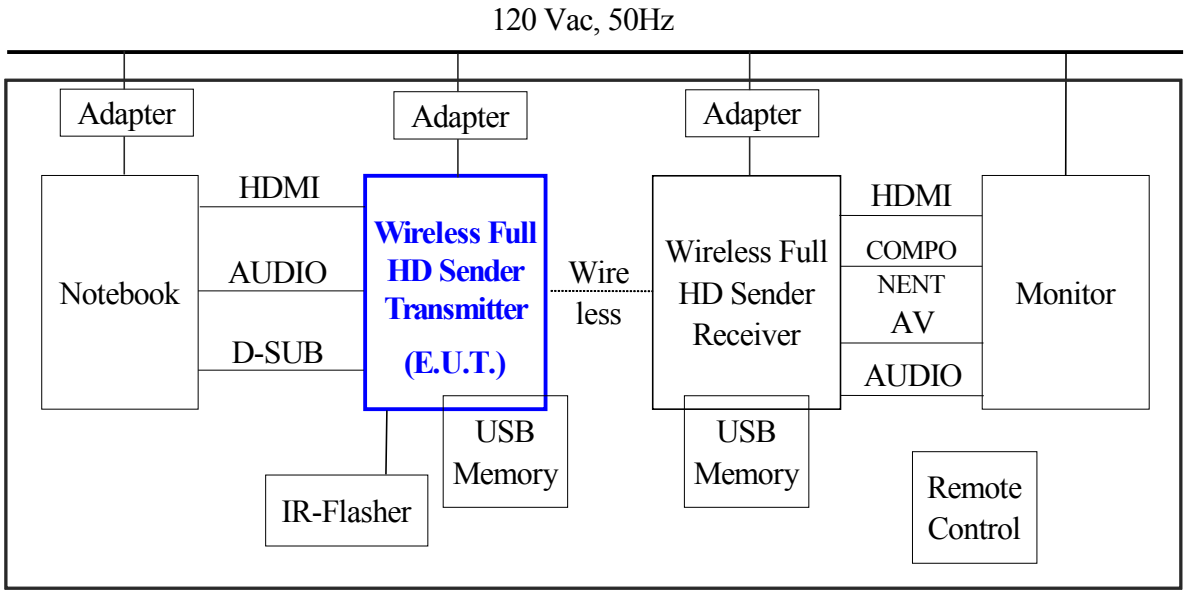

< Streamline Mode >

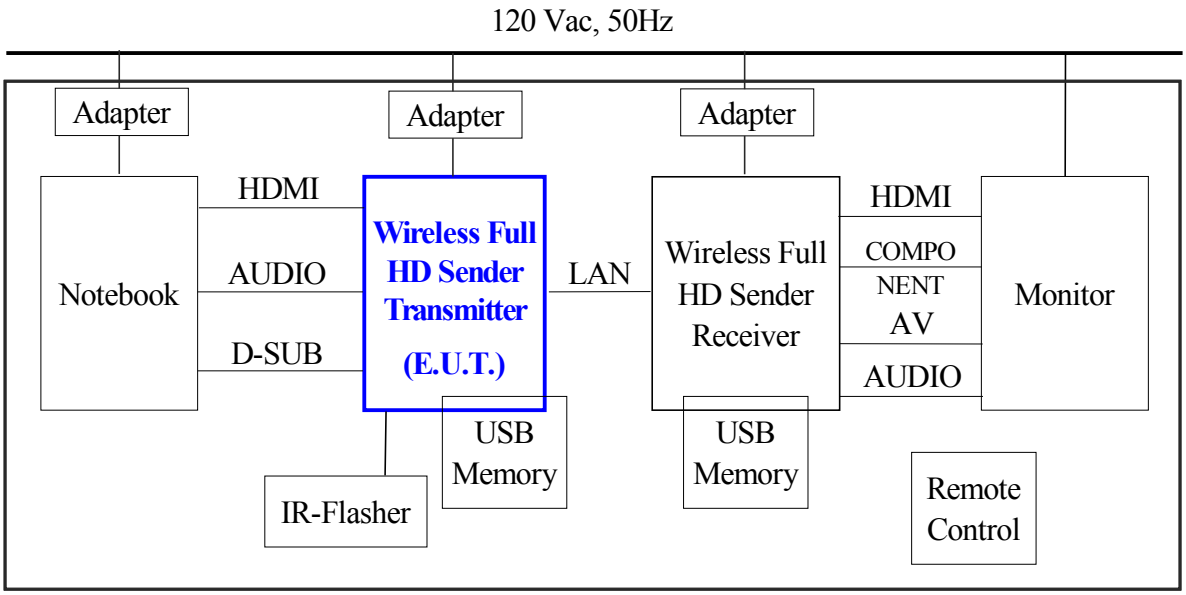

This Report shall not be reproduced except in full without the written approval of KSQ

8. Measurement Uncertainty

The Korea Standard Quality Laboratory test facilities are designed testing laboratory according to ISO/IEC 17025 by NATIONAL RADIO RESEARCH AGENCY.

Compliance of the product is based on the measured value.

However, the measurement uncertainty is included for information purposes.

The measurement uncertainties given below are based on a standard uncertainty multiplied by a coverage factor of k=2, providing a level of confidence of approximately 95 %.

Measurement Type	Frequency Range	Expanded Uncertainty
Conducted Emission	150 kHz to 30 MHz	±1.56 dB
Radiated Emission	30 MHz to 1 000 MHz	±4.87 dB
	1 000 MHz to 6 000 MHz	±4.33 dB

This Report shall not be reproduced except in full without the written approval of KSQ

9. Emissions Test Regulations

The emissions tests were performed according to following regulations :

☐ EMC - Directive 2004/108/EC

☐ EN 61000-6-3:2007+A1:2011

☐ EN 61000-6-4:2007+A1:2011

☐ EN 55011:2009+A1:2010	☐ Group 1 ☐ Class A	☐ Group 2 ☐ Class B
☐ EN 60034-1:2010		
☐ EN 55014-1:2006+A1+A2:2011		
☐ EN 55015:2006+A1+A2:2009		
☐ EN 61326-1:2006	☐ Class A	☐ Class B
☐ EN 55022:2010	☐ Class A	☐ Class B
☐ EN 61000-3-2:2006+A1+A2:2009		
☐ EN 61000-3-3:2008		
☐ EN 61800-3:2004+A1:2012	☐ Category C1 ☐ Category C3	☐ Category C2 ☐ Category C4
■ FCC Part 15 Subpart B	☐ Class A	■ Class B
☐ CISPR 11:2003+A1+A2:2006	☐ Group 1 ☐ Class A	☐ Group 2 ☐ Class B
☐ CISPR 22:2008	☐ Class A	☐ Class B
☐ CISPR 14-1:2005+A1+A2:2011		
☐ CISPR 15:2005+A1+A2:2008		

This Report shall not be reproduced except in full without the written approval of KSQ

10. Conducted Disturbance Voltages

Test Date and Condition

Date	April 01, 2015	Temperature:	22.8 ℃	Humidity	50 %

Test Location

Shield Room

Test Equipment

	Description	Manufacturer	Model Number	Serial Number	Cal. Due
■	TEST Receiver	ROHDE & SCHWARZ	ESPI	101014	2015.08.05
■	LISN	Kyoritsu	KNW-407	8-1010-14	2015.06.09
■	LISN	ROHDE & SCHWARZ	ENV216	101732	2016.03.01
■	ISN	Schwarzbeck	NTFM 8158 ISN CAT3 8 Wire	8158-0022	2016.03.01
■	ISN	Schwarzbeck	NTFM 8158 ISN CAT5 8 Wire	8158-0032	2016.03.01
■	ISN	Schwarzbeck	NTFM 8158 ISN CAT6 8 Wire	8158-0030	2016.03.01

Frequency Range of Measurement

150 kHz to 30 MHz

Test Results

The requirements are : ■ MET ☐ NOT MET ☐ NOT APPLICABLE

■ Main Ports

Frequency (MHz)	Corrected Amplitude(dBuV)	Margin(dB)	QP / AV	Remark
0.18	47.15	7.34	AV	

■ Communication Ports

Frequency (MHz)	Corrected Amplitude(dBuV)	Margin(dB)	QP / AV
0.49	59.34	4.83	AV

Remark

Streamline Mode is worse than Wireless Mode. Test Result is Streamline Mode.

HDMI Mode is the worst case of all mode. Test Result is HDMI Mode.

CAT3 Mode is the worst case of all mode. Test Result is CAT3 Mode.

See Appendix B for test data.

This Report shall not be reproduced except in full without the written approval of KSQ

11. Radiated Electric Field Emissions

Test Date and Condition

10 M OATS

Date	April 02, 2015	Temperature:	6.4 ℃	Humidity	40 %

3 M SAC

Date	April 02, 2015	Temperature:	20.8 ℃	Humidity	51 %

Test Location

10 M OATS

Test Equipment

	Description	Manufacturer	Model Number	Serial Number	Cal. Due
■	Bi-log Antenna	Schwarzbeck	VULB9160	3311	2015.11.21
■	TEST RECEIVER	ROHDE & SCHWARZ	ESPI	101014	2015.08.05
■	AMPLIFIER	SONOMA INSTRUMENT	310N	251847	2015.05.01
■	Horn Antenna	Schwarzbeck	BBHA9120D	831	2016.07.21
■	EMI TEST Receiver	LIG Nex1	LSA-265	L07098033	2015.12.11
■	Pre Amplifier	GTC	GA-1825A	GT0929/003	2015.06.01

Frequency Range of Measurement

30 MHz to 1000 MHz, 1000 MHz to 6000 MHz

Test Results

The requirements are : ■ MET ☐ NOT MET ☐ NOT APPLICABLE

■ Below 1 000 MHz

Frequency (MHz)	Polar.	Corrected Amplitude (dBuV/m)	Margin(dB)	Remark
57.12	H	35.27	4.73	

■ Above 1 000 MHz

Frequency (MHz)	Polar.	PK/AV	Corrected Amplitude (dBuV/m)	Margin(dB)	Remark
1186.50	V	AV	45.76	4.24	

Remark

Wireless Mode is worse than Streamline Mode. Test Result is Wireless Mode.

HDMI Mode is the worst case of all mode. Test Result is HDMI Mode.

See Appendix B for test data.

This Report shall not be reproduced except in full without the written approval of KSQ

APPENDIX A - Test Setup Photographs

Conducted Disturbance Voltage (Main Port)

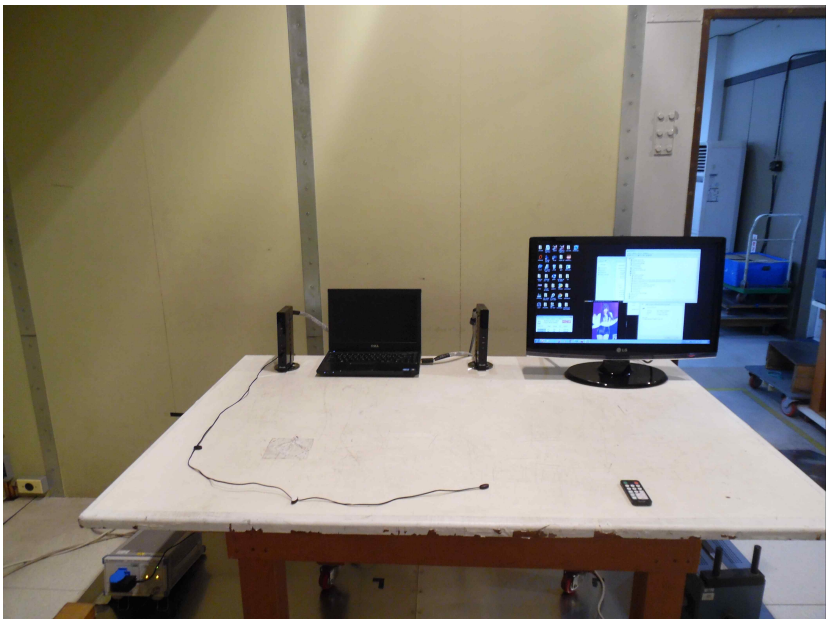

Conducted Disturbance Voltage (Communication)

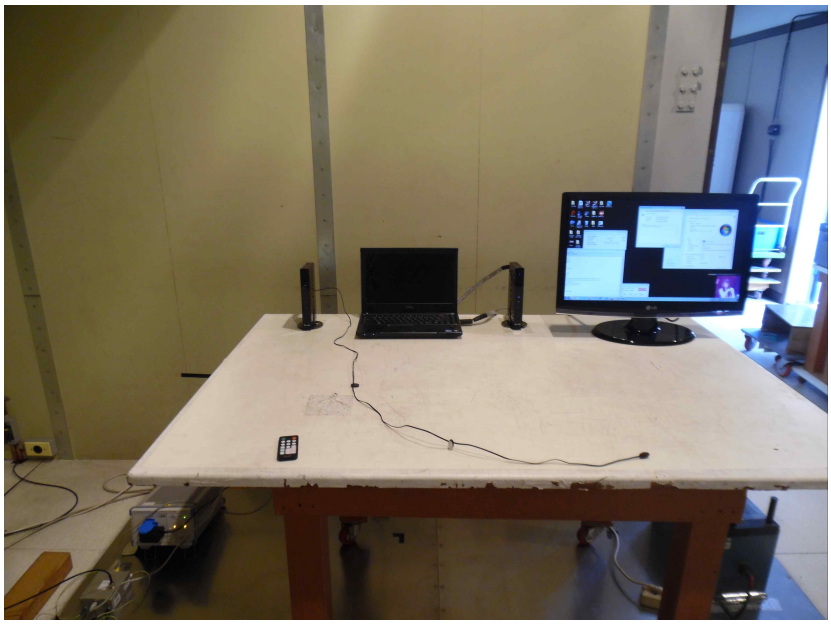

This Report shall not be reproduced except in full without the written approval of KSQ

Radiated Electric Field Emissions (Below 1000 MHz)

Radiated Electric Field Emissions (Above 1000 MHz)

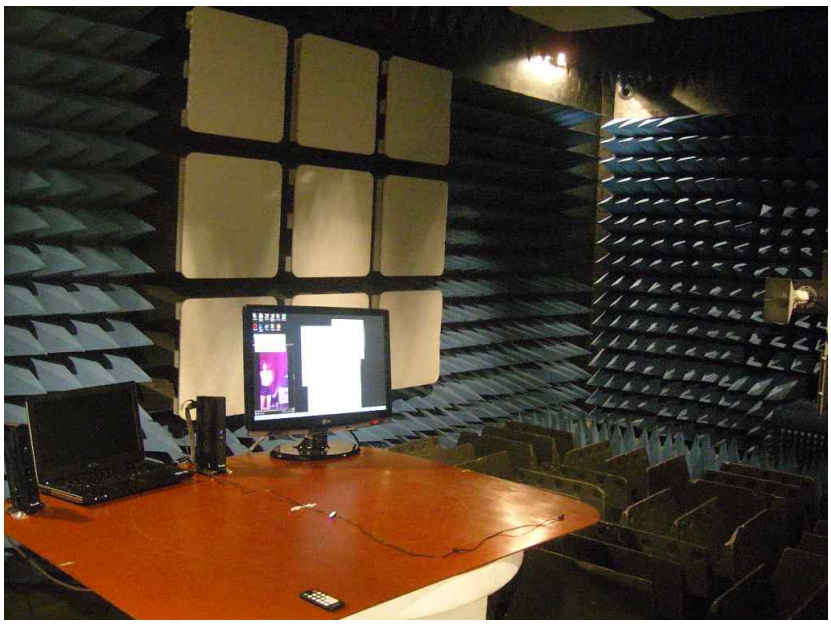

This Report shall not be reproduced except in full without the written approval of KSQ

APPENDIX B - Test Data

■ Conducted Disturbance Voltage (Main Ports)

Wireless Mode (D-SUB)

Freq. (Mhz)	Correction Factor		Phase	FCC Part 15 Class B							
				Quasi-Peak			Average			QP Margin	Average Margin
	LISN	Cable		Limit (dBuV)	Indicated Amplitude (dBuV)	Corrected Amplitude (dBuV)	Limit (dBuV)	Indicated Amplitude (dBuV)	Corrected Amplitude (dBuV)		
0.17	9.65	0.58	N	64.96	53.62	53.62	54.96	45.68	45.68	11.34	9.28
0.18	9.61	0.55	H	64.49	52.64	52.64	54.49	46.57	46.57	11.85	7.92
0.24	9.63	0.49	H	62.10	45.82	45.82	52.10	37.65	37.65	16.28	14.45
0.33	9.63	0.61	N	59.45	43.65	43.65	49.45	36.20	36.20	15.80	13.25
0.34	9.63	0.61	H	59.20	43.26	43.26	49.20	36.31	36.31	15.94	12.89
0.41	9.64	0.60	N	57.65	40.88	40.88	47.65	33.55	33.55	16.77	14.10
0.55	9.64	0.58	H	56.00	41.88	41.88	46.00	28.53	28.53	14.12	17.47
0.73	9.64	0.58	N	56.00	39.68	39.68	46.00	25.74	25.74	16.32	20.26
1.02	9.65	0.63	H	56.00	40.65	40.65	46.00	34.32	34.32	15.35	11.68
1.03	9.65	0.62	N	56.00	40.85	40.85	46.00	34.05	34.05	15.15	11.95
1.67	9.65	0.59	H	56.00	42.58	42.58	46.00	24.69	24.69	13.42	21.31
1.69	9.66	0.59	N	56.00	43.20	43.20	46.00	27.12	27.12	12.80	18.88

This Report shall not be reproduced except in full without the written approval of KSQ

Wireless Mode (USB)

Freq. (Mhz)	Correction Factor		Phase	FCC Part 15 Class B							
				Quasi-Peak			Average			QP Margin	Average Margin
	LISN	Cable		Limit (dBuV)	Indicated Amplitude (dBuV)	Corrected Amplitude (dBuV)	Limit (dBuV)	Indicated Amplitude (dBuV)	Corrected Amplitude (dBuV)		
0.18	9.64	0.55	N	64.49	53.24	53.24	54.49	44.69	44.69	11.25	9.80
0.19	9.62	0.53	H	64.04	53.24	53.24	54.04	46.53	46.53	10.80	7.51
0.25	9.63	0.49	H	61.76	45.98	45.98	51.76	37.25	37.25	15.78	14.51
0.34	9.63	0.61	N	59.20	44.31	44.31	49.20	35.89	35.89	14.89	13.31
0.35	9.63	0.61	H	58.96	42.68	42.68	48.96	36.04	36.04	16.28	12.92
0.42	9.64	0.59	N	57.45	39.88	39.88	47.45	34.02	34.02	17.57	13.43
0.57	9.64	0.58	H	56.00	42.27	42.27	46.00	29.61	29.61	13.73	16.39
0.81	9.65	0.57	N	56.00	38.62	38.62	46.00	24.75	24.75	17.38	21.25
1.09	9.65	0.61	N	56.00	39.96	39.96	46.00	35.51	35.51	16.04	10.49
1.13	9.65	0.60	H	56.00	41.52	41.52	46.00	33.56	33.56	14.48	12.44
1.72	9.67	0.59	N	56.00	42.48	42.48	46.00	27.26	27.26	13.52	18.74
1.84	9.66	0.61	H	56.00	43.25	43.25	46.00	25.02	25.02	12.75	20.98

This Report shall not be reproduced except in full without the written approval of KSQ

Wireless Mode (HDMI)

Freq. (Mhz)	Correction Factor		Phase	FCC Part 15 Class B							
				Quasi-Peak			Average			QP Margin	Average Margin
	LISN	Cable		Limit (dBuV)	Indicated Amplitude (dBuV)	Corrected Amplitude (dBuV)	Limit (dBuV)	Indicated Amplitude (dBuV)	Corrected Amplitude (dBuV)		
0.18	9.61	0.55	H	64.49	52.64	52.64	54.49	45.96	45.96	11.85	8.53
0.20	9.62	0.50	N	63.61	51.28	51.28	53.61	43.16	43.16	12.33	10.45
0.26	9.63	0.52	H	61.43	46.03	46.03	51.43	37.72	37.72	15.40	13.71
0.33	9.63	0.61	H	59.45	41.87	41.87	49.45	36.23	36.23	17.58	13.22
0.40	9.64	0.60	N	57.85	43.28	43.28	47.85	35.52	35.52	14.57	12.33
0.49	9.64	0.57	N	56.17	38.82	38.82	46.17	33.85	33.85	17.35	12.32
0.59	9.64	0.58	H	56.00	43.24	43.24	46.00	29.94	29.94	12.76	16.06
1.02	9.65	0.63	N	56.00	37.76	37.76	46.00	24.28	24.28	18.24	21.72
1.13	9.65	0.60	N	56.00	40.62	40.62	46.00	35.24	35.24	15.38	10.76
1.18	9.65	0.59	H	56.00	40.95	40.95	46.00	34.06	34.06	15.05	11.94
1.74	9.67	0.60	N	56.00	41.36	41.36	46.00	28.20	28.20	14.64	17.80
1.82	9.66	0.61	H	56.00	43.38	43.38	46.00	24.16	24.16	12.62	21.84

This Report shall not be reproduced except in full without the written approval of KSQ

Streamline Mode (D-SUB)

Freq. (Mhz)	Correction Factor		Phase	FCC Part 15 Class B							
				Quasi-Peak			Average			QP Margin	Average Margin
	LISN	Cable		Limit (dBuV)	Indicated Amplitude (dBuV)	Corrected Amplitude (dBuV)	Limit (dBuV)	Indicated Amplitude (dBuV)	Corrected Amplitude (dBuV)		
0.18	9.61	0.55	H	64.49	54.23	54.23	54.49	46.82	46.82	10.26	7.67
0.19	9.63	0.53	N	64.04	53.37	53.37	54.04	46.58	46.58	10.67	7.46
0.26	9.63	0.52	H	61.43	45.97	45.97	51.43	38.12	38.12	15.46	13.31
0.32	9.63	0.62	H	59.71	43.61	43.61	49.71	36.68	36.68	16.10	13.03
0.33	9.63	0.61	N	59.45	42.63	42.63	49.45	35.69	35.69	16.82	13.76
0.40	9.64	0.60	N	57.85	41.17	41.17	47.85	34.32	34.32	16.68	13.53
0.53	9.64	0.57	H	56.00	40.88	40.88	46.00	27.16	27.16	15.12	18.84
0.72	9.64	0.59	N	56.00	39.97	39.97	46.00	26.18	26.18	16.03	19.82
0.98	9.65	0.61	N	56.00	42.23	42.23	46.00	32.85	32.85	13.77	13.15
1.02	9.65	0.63	H	56.00	40.86	40.86	46.00	33.41	33.41	15.14	12.59
1.59	9.65	0.59	H	56.00	42.69	42.69	46.00	27.74	27.74	13.31	18.26
1.69	9.66	0.59	N	56.00	43.42	43.42	46.00	27.73	27.73	12.58	18.27

This Report shall not be reproduced except in full without the written approval of KSQ

Streamline Mode (USB)

Freq. (Mhz)	Correction Factor		Phase	FCC Part 15 Class B							
				Quasi-Peak			Average			QP Margin	Average Margin
	LISN	Cable		Limit (dBuV)	Indicated Amplitude (dBuV)	Corrected Amplitude (dBuV)	Limit (dBuV)	Indicated Amplitude (dBuV)	Corrected Amplitude (dBuV)		
0.18	9.61	0.55	H	64.49	53.67	53.67	54.49	45.89	45.89	10.82	8.60
0.22	9.62	0.50	N	62.82	52.67	52.67	52.82	45.96	45.96	10.15	6.86
0.27	9.63	0.54	H	61.12	44.62	44.62	51.12	37.72	37.72	16.50	13.40
0.34	9.63	0.61	N	59.20	41.68	41.68	49.20	36.20	36.20	17.52	13.00
0.35	9.63	0.61	H	58.96	43.36	43.36	48.96	35.89	35.89	15.60	13.07
0.42	9.64	0.59	N	57.45	42.05	42.05	47.45	34.48	34.48	15.40	12.97
0.54	9.64	0.57	H	56.00	41.67	41.67	46.00	28.41	28.41	14.33	17.59
0.74	9.64	0.58	N	56.00	40.25	40.25	46.00	26.34	26.34	15.75	19.66
1.05	9.65	0.62	N	56.00	41.68	41.68	46.00	33.60	33.60	14.32	12.40
1.08	9.65	0.61	H	56.00	41.38	41.38	46.00	34.36	34.36	14.62	11.64
1.62	9.65	0.59	H	56.00	42.87	42.87	46.00	27.72	27.72	13.13	18.28
1.72	9.67	0.59	N	56.00	42.69	42.69	46.00	27.75	27.75	13.31	18.25

This Report shall not be reproduced except in full without the written approval of KSQ

Streamline Mode (HDMI)

Freq. (Mhz)	Correction Factor		Phase	FCC Part 15 Class B							
				Quasi-Peak			Average			QP Margin	Average Margin
	LISN	Cable		Limit (dBuV)	Indicated Amplitude (dBuV)	Corrected Amplitude (dBuV)	Limit (dBuV)	Indicated Amplitude (dBuV)	Corrected Amplitude (dBuV)		
0.17	9.61	0.58	H	64.96	53.84	53.84	54.96	47.41	47.41	11.12	7.55
0.18	9.64	0.55	N	64.49	54.25	54.25	54.49	47.15	47.15	10.24	7.34
0.24	9.63	0.49	H	62.10	46.60	46.60	52.10	38.23	38.23	15.50	13.87
0.30	9.63	0.62	H	60.24	44.81	44.81	50.24	37.76	37.76	15.43	12.48
0.30	9.63	0.62	N	60.24	43.86	43.86	50.24	36.03	36.03	16.38	14.21
0.38	9.64	0.60	N	58.28	41.66	41.66	48.28	33.17	33.17	16.62	15.11
0.51	9.64	0.57	H	56.00	41.91	41.91	46.00	27.55	27.55	14.09	18.45
0.70	9.64	0.59	N	56.00	40.77	40.77	46.00	26.21	26.21	15.23	19.79
0.97	9.65	0.61	H	56.00	41.56	41.56	46.00	33.95	33.95	14.44	12.05
0.97	9.65	0.61	N	56.00	41.69	41.69	46.00	33.55	33.55	14.31	12.45
1.58	9.65	0.59	H	56.00	43.41	43.41	46.00	27.62	27.62	12.59	18.38
1.68	9.66	0.59	N	56.00	42.64	42.64	46.00	27.07	27.07	13.36	18.93

This Report shall not be reproduced except in full without the written approval of KSQ

■ Conducted Disturbance Voltage (Communication Ports) - CAT3 Mode

Freq. (Mhz)	Correction Factor		FCC Part 15 Class B							
			Quasi-Peak			Average			QP Margin	Average Margin
	LISN	Cable	Limit (dBuV)	Indicated Amplitude (dBuV)	Corrected Amplitude (dBuV)	Limit (dBuV)	Indicated Amplitude (dBuV)	Corrected Amplitude (dBuV)		
0.26	9.69	0.52	79.43	64.49	64.49	69.43	59.74	59.74	14.94	9.69
0.49	9.65	0.57	74.17	66.42	66.42	64.17	59.34	59.34	7.75	4.83
0.70	9.65	0.59	74.00	63.47	63.47	64.00	56.55	56.55	10.53	7.45
1.16	9.64	0.60	74.00	62.77	62.77	64.00	56.50	56.50	11.23	7.50
1.60	9.64	0.59	74.00	62.02	62.02	64.00	56.38	56.38	11.98	7.62
2.59	9.65	0.64	74.00	61.48	61.48	64.00	56.42	56.42	12.52	7.58

■ Conducted Disturbance Voltage (Communication Ports) - CAT5 Mode

Freq. (Mhz)	Correction Factor		FCC Part 15 Class B							
			Quasi-Peak			Average			QP Margin	Average Margin
	LISN	Cable	Limit (dBuV)	Indicated Amplitude (dBuV)	Corrected Amplitude (dBuV)	Limit (dBuV)	Indicated Amplitude (dBuV)	Corrected Amplitude (dBuV)		
0.36	9.77	0.61	76.73	63.52	63.52	66.73	57.61	57.61	13.21	9.12
0.84	9.61	0.56	74.00	58.96	58.96	64.00	51.36	51.36	15.04	12.64
1.15	9.56	0.60	74.00	64.30	64.30	64.00	50.39	50.39	9.70	13.61
1.21	9.55	0.59	74.00	62.38	62.38	64.00	55.20	55.20	11.62	8.80
1.62	9.50	0.59	74.00	63.27	63.27	64.00	52.68	52.68	10.73	11.32
2.62	9.44	0.64	74.00	61.03	61.03	64.00	55.78	55.78	12.97	8.22

This Report shall not be reproduced except in full without the written approval of KSQ

■ Conducted Disturbance Voltage (Communication Ports) - CAT6 Mode

Freq. (Mhz)	Correction Factor		FCC Part 15 Class B							
			Quasi-Peak			Average			QP Margin	Average Margin
	LISN	Cable	Limit (dBuV)	Indicated Amplitude (dBuV)	Corrected Amplitude (dBuV)	Limit (dBuV)	Indicated Amplitude (dBuV)	Corrected Amplitude (dBuV)		
0.41	9.65	0.60	75.65	61.39	61.39	65.65	56.23	56.23	14.26	9.42
0.86	9.56	0.56	74.00	57.88	57.88	64.00	52.84	52.84	16.12	11.16
1.21	9.55	0.59	74.00	63.60	63.60	64.00	51.85	51.85	10.40	12.15
2.49	9.54	0.65	74.00	61.39	61.39	64.00	54.68	54.68	12.61	9.32
3.67	9.55	0.62	74.00	62.38	62.38	64.00	54.03	54.03	11.62	9.97
4.62	9.55	0.63	74.00	61.82	61.82	64.00	54.29	54.29	12.18	9.71

This Report shall not be reproduced except in full without the written approval of KSQ

■ Radiated Electric Field Emissions (Below 1000 MHz)

Wireless Mode (D-SUB)

Indicated		Antenna		FCC Part 15 Class B					
Frequency (MHz)	Indicated Amplitude (dBuV/m)	Polar. (H/V)	Height (m)	Correction Factor			Limit (dBuV/m)	Corrected Amplitude (dBuV/m)	Margin (dB)
				Antenna (dB/m)	Cable (dB)	AMP (dB)			
44.65	22.67	H	3.5	11.50	1.49	32.52	30.00	22.67	7.33
50.36	24.87	V	3.5	11.45	1.55	32.51	30.00	24.87	5.13
79.25	24.98	H	3.0	7.90	1.85	32.52	30.00	24.98	5.02
150.36	22.79	V	2.8	12.74	2.42	32.51	30.00	22.79	7.21
154.21	23.37	H	2.1	12.84	2.45	32.51	30.00	23.37	6.63
448.26	31.27	V	1.2	16.85	4.36	32.63	37.00	31.27	5.73

Wireless Mode (USB)

Indicated		Antenna		FCC Part 15 Class B					
Frequency (MHz)	Indicated Amplitude (dBuV/m)	Polar. (H/V)	Height (m)	Correction Factor			Limit (dBuV/m)	Corrected Amplitude (dBuV/m)	Margin (dB)
				Antenna (dB/m)	Cable (dB)	AMP (dB)			
46.35	23.14	H	3.6	11.51	1.51	32.52	30.00	23.14	6.86
51.36	25.02	V	3.4	11.38	1.57	32.51	30.00	25.02	4.98
78.82	23.80	H	2.8	7.97	1.85	32.52	30.00	23.80	6.20
158.63	23.13	H	1.9	12.96	2.48	32.51	30.00	23.13	6.87
159.52	22.17	V	2.6	12.99	2.49	32.51	30.00	22.17	7.83
457.52	30.62	V	1.3	16.87	4.32	32.63	37.00	30.62	6.38

This Report shall not be reproduced except in full without the written approval of KSQ

Wireless Mode (HDMI)

Indicated		Antenna		FCC Part 15 Class B					
Frequency (MHz)	Indicated Amplitude (dBuV/m)	Polar. (H/V)	Height (m)	Correction Factor			Limit (dBuV/m)	Corrected Amplitude (dBuV/m)	Margin (dB)
				Antenna (dB/m)	Cable (dB)	AMP (dB)			
58.63	35.12	H	3.8	10.89	1.65	32.51	40.00	35.12	4.88
69.61	35.02	V	3.8	9.46	1.77	32.52	40.00	35.02	4.98
72.04	32.64	H	3.3	9.08	1.79	32.52	40.00	32.64	7.36
116.57	26.64	V	3.3	10.83	2.14	32.53	40.00	26.64	13.36
377.55	27.76	V	1.8	15.12	3.85	32.55	47.00	27.76	19.24
453.27	34.27	H	2.0	16.78	4.30	32.62	47.00	34.27	12.73

Streamline Mode (D-SUB)

Indicated		Antenna		FCC Part 15 Class B					
Frequency (MHz)	Indicated Amplitude (dBuV/m)	Polar. (H/V)	Height (m)	Correction Factor			Limit (dBuV/m)	Corrected Amplitude (dBuV/m)	Margin (dB)
				Antenna (dB/m)	Cable (dB)	AMP (dB)			
49.63	24.13	H	3.7	11.47	1.55	32.51	30.00	24.13	5.87
52.31	24.89	V	2.9	11.32	1.58	32.51	30.00	24.89	5.11
79.62	22.51	H	2.4	7.84	1.86	32.52	30.00	22.51	7.49
156.38	22.96	H	2.1	12.90	2.46	32.51	30.00	22.96	7.04
163.28	21.98	V	3.0	12.71	2.53	32.51	30.00	21.98	8.02
463.58	31.65	V	1.5	17.00	4.39	32.63	37.00	31.65	5.35

This Report shall not be reproduced except in full without the written approval of KSQ

Streamline Mode (USB)

Indicated		Antenna		FCC Part 15 Class B					
Frequency (MHz)	Indicated Amplitude (dBuV/m)	Polar. (H/V)	Height (m)	Correction Factor			Limit (dBuV/m)	Corrected Amplitude (dBuV/m)	Margin (dB)
				Antenna (dB/m)	Cable (dB)	AMP (dB)			
44.75	23.15	H	3.7	11.50	1.50	32.52	30.00	23.15	6.85
51.31	25.34	V	3.4	11.38	1.57	32.51	30.00	25.34	4.66
77.69	25.81	H	3.3	8.16	1.84	32.52	30.00	25.81	4.19
154.68	23.15	V	2.8	12.86	2.45	32.51	30.00	23.15	6.85
162.68	23.62	H	2.4	12.76	2.52	32.51	30.00	23.62	6.38
465.28	32.08	V	1.7	17.04	4.39	32.64	37.00	32.08	4.92

Streamline Mode (HDMI)

Indicated		Antenna		FCC Part 15 Class B					
Frequency (MHz)	Indicated Amplitude (dBuV/m)	Polar. (H/V)	Height (m)	Correction Factor			Limit (dBuV/m)	Corrected Amplitude (dBuV/m)	Margin (dB)
				Antenna (dB/m)	Cable (dB)	AMP (dB)			
45.13	23.06	H	3.6	11.52	1.50	32.52	30.00	23.06	6.94
52.34	24.85	V	3.3	11.31	1.58	32.51	30.00	24.85	5.15
78.59	24.89	H	3.5	8.01	1.85	32.52	30.00	24.89	5.11
162.30	23.07	V	2.7	12.80	2.52	32.51	30.00	23.07	6.93
163.25	22.87	H	2.5	12.71	2.53	32.51	30.00	22.87	7.13
468.52	31.06	V	2.1	17.11	4.40	32.64	37.00	31.06	5.94

This Report shall not be reproduced except in full without the written approval of KSQ

■ Radiated Electric Field Emissions (Above 1000 MHz)

Wireless Mode (D-SUB)

Indicated		Antenna		Correction Factor			Detector (PK/AV)	FCC Part 15 Class B		
Frequency (MHz)	Amplitude (dBuV/m)	Polar. (H/V)	Height (m)	Ant. (dB)	Cable (dB)	AMP (dB)		Limit (dBuV/m)	Corrected Amplitude (dBuV/m)	Margin (dB)
1632.50	47.20	H	1.2	25.62	4.71	26.46	PK	70.00	47.20	22.80
1682.90	50.38	V	1.2	25.62	4.71	26.46	PK	70.00	50.38	19.62
2384.50	51.65	V	1.2	27.32	7.27	25.80	PK	70.00	51.65	18.35
2685.10	51.36	H	1.2	28.06	6.25	25.50	PK	70.00	51.36	18.64
2689.40	53.61	V	1.2	28.06	6.25	25.50	PK	70.00	53.61	16.39
3125.10	51.32	H	1.2	28.64	6.07	24.91	PK	74.00	51.32	22.68
1632.50	41.62	H	1.2	25.62	4.71	26.46	AV	50.00	41.62	8.38
1682.90	41.65	V	1.2	25.62	4.71	26.46	AV	50.00	41.65	8.35
2384.50	43.20	V	1.2	27.32	7.27	25.80	AV	50.00	43.20	6.80
2685.10	44.67	H	1.2	28.06	6.25	25.50	AV	50.00	44.67	5.33
2689.40	44.78	V	1.2	28.06	6.25	25.50	AV	50.00	44.78	5.22
3125.10	44.25	H	1.2	28.64	6.07	24.91	AV	54.00	44.25	9.75

This Report shall not be reproduced except in full without the written approval of KSQ

Wireless Mode (USB)

Indicated		Antenna		Correction Factor			Detector (PK/AV)	FCC Part 15 Class B		
Frequency (MHz)	Amplitude (dBuV/m)	Polar. (H/V)	Height (m)	Ant. (dB)	Cable (dB)	AMP (dB)		Limit (dBuV/m)	Corrected Amplitude (dBuV/m)	Margin (dB)
1563.20	47.25	H	1.2	25.47	4.49	26.54	PK	70.00	47.25	22.75
1657.20	49.63	V	1.2	25.62	4.71	26.46	PK	70.00	49.63	20.37
2385.60	51.60	V	1.2	27.32	7.27	25.80	PK	70.00	51.60	18.40
2592.30	52.17	V	1.2	27.91	6.31	25.60	PK	70.00	52.17	17.83
2648.50	51.13	H	1.2	28.06	6.25	25.50	PK	70.00	51.13	18.87
3256.10	51.86	H	1.2	28.68	6.17	24.75	PK	74.00	51.86	22.14
1563.20	41.63	H	1.2	25.47	4.49	26.54	AV	50.00	41.63	8.37
1657.20	42.12	V	1.2	25.62	4.71	26.46	AV	50.00	42.12	7.88
2385.60	42.38	V	1.2	27.32	7.27	25.80	AV	50.00	42.38	7.62
2592.30	45.10	V	1.2	27.91	6.31	25.60	AV	50.00	45.10	4.90
2648.50	44.28	H	1.2	28.06	6.25	25.50	AV	50.00	44.28	5.72
3256.10	43.68	H	1.2	28.68	6.17	24.75	AV	54.00	43.68	10.32

This Report shall not be reproduced except in full without the written approval of KSQ

Wireless Mode (HDMI)

Indicated		Antenna		Correction Factor			Detector (PK/AV)	FCC Part 15 Class B		
Frequency (MHz)	Amplitude (dBuV/m)	Polar. (H/V)	Height (m)	Ant. (dB)	Cable (dB)	AMP (dB)		Limit (dBuV/m)	Corrected Amplitude (dBuV/m)	Margin (dB)
1532.40	47.95	H	1.2	25.47	4.49	26.54	PK	70.00	47.95	22.05
1768.20	50.65	V	1.2	25.77	4.90	26.37	PK	70.00	50.65	19.35
2352.10	51.16	V	1.2	27.32	7.27	25.80	PK	70.00	51.16	18.84
2687.90	52.87	H	1.2	28.06	6.25	25.50	PK	70.00	52.87	17.13
2697.80	54.26	V	1.2	28.06	6.25	25.50	PK	70.00	54.26	15.74
2994.80	51.82	H	1.2	28.51	6.09	25.19	PK	70.00	51.82	18.18
1532.40	41.65	H	1.2	25.47	4.49	26.54	AV	50.00	41.65	8.35
1768.20	42.65	V	1.2	25.77	4.90	26.37	AV	50.00	42.65	7.35
2352.10	43.62	V	1.2	27.32	7.27	25.80	AV	50.00	43.62	6.38
2687.90	45.89	H	1.2	28.06	6.25	25.50	AV	50.00	45.89	4.11
2697.80	45.71	V	1.2	28.06	6.25	25.50	AV	50.00	45.71	4.29
2994.80	44.87	H	1.2	28.51	6.09	25.19	AV	50.00	44.87	5.13

This Report shall not be reproduced except in full without the written approval of KSQ

Streamline Mode (D-SUB)

Indicated		Antenna		Correction Factor			Detector (PK/AV)	FCC Part 15 Class B		
Frequency (MHz)	Amplitude (dBuV/m)	Polar. (H/V)	Height (m)	Ant. (dB)	Cable (dB)	AMP (dB)		Limit (dBuV/m)	Corrected Amplitude (dBuV/m)	Margin (dB)
1465.20	47.35	H	1.2	25.33	4.24	26.63	PK	70.00	47.35	22.65
1658.50	48.69	V	1.2	25.62	4.71	26.46	PK	70.00	48.69	21.31
2384.50	51.62	V	1.2	27.32	7.27	25.80	PK	70.00	51.62	18.38
2648.70	51.32	H	1.2	28.06	6.25	25.50	PK	70.00	51.32	18.68
2652.10	51.35	V	1.2	28.06	6.25	25.50	PK	70.00	51.35	18.65
3354.60	50.84	H	1.2	28.72	6.26	24.59	PK	74.00	50.84	23.16
1465.20	42.06	H	1.2	25.33	4.24	26.63	AV	50.00	42.06	7.94
1658.50	41.87	V	1.2	25.62	4.71	26.46	AV	50.00	41.87	8.13
2384.50	41.65	V	1.2	27.32	7.27	25.80	AV	50.00	41.65	8.35
2648.70	43.26	H	1.2	28.06	6.25	25.50	AV	50.00	43.26	6.74
2652.10	44.85	V	1.2	28.06	6.25	25.50	AV	50.00	44.85	5.15
3354.60	43.28	H	1.2	28.72	6.26	24.59	AV	54.00	43.28	10.72

This Report shall not be reproduced except in full without the written approval of KSQ

Streamline Mode (USB)

Indicated		Antenna		Correction Factor			Detector (PK/AV)	FCC Part 15 Class B		
Frequency (MHz)	Amplitude (dBuV/m)	Polar. (H/V)	Height (m)	Ant. (dB)	Cable (dB)	AMP (dB)		Limit (dBuV/m)	Corrected Amplitude (dBuV/m)	Margin (dB)
1563.20	48.02	H	1.2	25.47	4.49	26.54	PK	70.00	48.02	21.98
1845.20	51.63	V	1.2	25.92	5.18	26.29	PK	70.00	51.63	18.37
2386.40	51.67	V	1.2	27.32	7.27	25.80	PK	70.00	51.67	18.33
2635.80	52.41	H	1.2	28.06	6.25	25.50	PK	70.00	52.41	17.59
2684.50	54.16	V	1.2	28.06	6.25	25.50	PK	70.00	54.16	15.84
2998.50	50.32	H	1.2	28.51	6.09	25.19	PK	70.00	50.32	19.68
1563.20	41.65	H	1.2	25.47	4.49	26.54	AV	50.00	41.65	8.35
1845.20	42.85	V	1.2	25.92	5.18	26.29	AV	50.00	42.85	7.15
2386.40	43.21	V	1.2	27.32	7.27	25.80	AV	50.00	43.21	6.79
2635.80	44.87	H	1.2	28.06	6.25	25.50	AV	50.00	44.87	5.13
2684.50	46.20	V	1.2	28.06	6.25	25.50	AV	50.00	45.27	4.73
2998.50	43.54	H	1.2	28.51	6.09	25.19	AV	50.00	43.54	6.46

This Report shall not be reproduced except in full without the written approval of KSQ

Streamline Mode (HDMI)

Indicated		Antenna		Correction Factor			Detector (PK/AV)	FCC Part 15 Class B		
Frequency (MHz)	Amplitude (dBuV/m)	Polar. (H/V)	Height (m)	Ant. (dB)	Cable (dB)	AMP (dB)		Limit (dBuV/m)	Corrected Amplitude (dBuV/m)	Margin (dB)
1568.40	48.32	H	1.2	25.47	4.49	26.54	PK	70.00	48.32	21.68
1765.80	50.35	V	1.2	25.77	4.90	26.37	PK	70.00	50.35	19.65
2385.40	51.84	V	1.2	27.32	7.27	25.80	PK	70.00	51.84	18.16
2633.40	51.87	H	1.2	28.06	6.25	25.50	PK	70.00	51.87	18.13
2697.50	54.32	V	1.2	28.06	6.25	25.50	PK	70.00	54.32	15.68
2995.60	49.85	H	1.2	28.51	6.09	25.19	PK	70.00	49.85	20.15
1568.40	41.62	H	1.2	25.47	4.49	26.54	AV	50.00	41.62	8.38
1765.80	41.68	V	1.2	25.77	4.90	26.37	AV	50.00	41.68	8.32
2385.40	42.64	V	1.2	27.32	7.27	25.80	AV	50.00	42.64	7.36
2633.40	43.68	H	1.2	28.06	6.25	25.50	AV	50.00	43.68	6.32
2697.50	44.71	V	1.2	28.06	6.25	25.50	AV	50.00	44.71	5.29
2995.60	43.21	H	1.2	28.51	6.09	25.19	AV	50.00	43.21	6.79

This Report shall not be reproduced except in full without the written approval of KSQ

APPENDIX C - EUT Photographs

EUT : Front View

EUT :Rear View

This Report shall not be reproduced except in full without the written approval of KSQ