ION®-E Series Hardware

Installation Guide • M0201AAA • June 2017

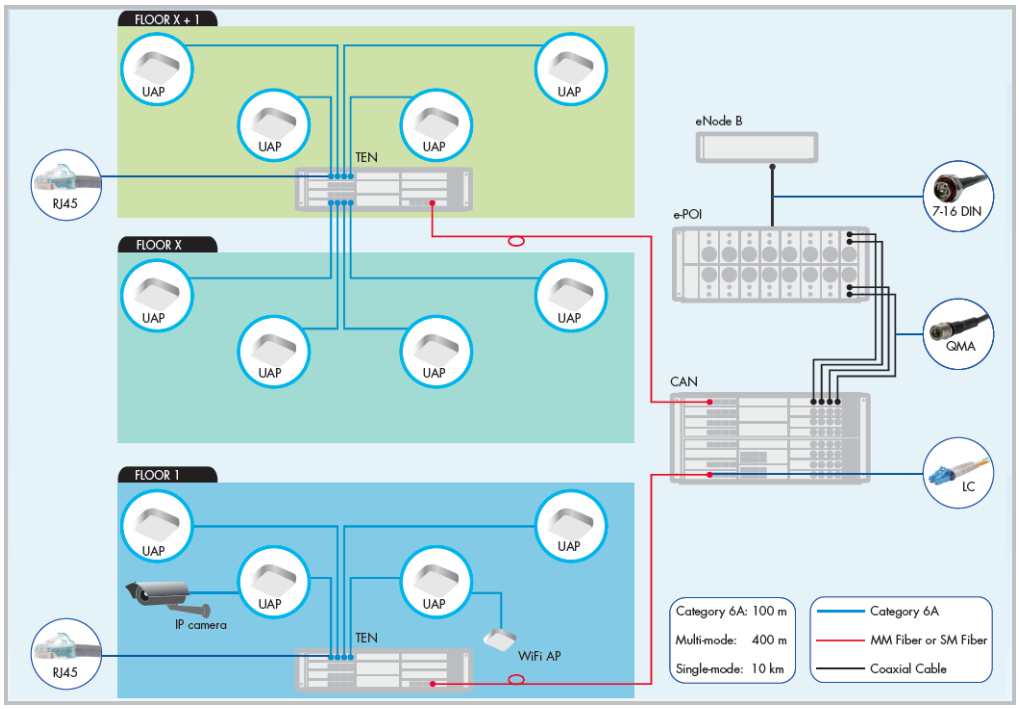

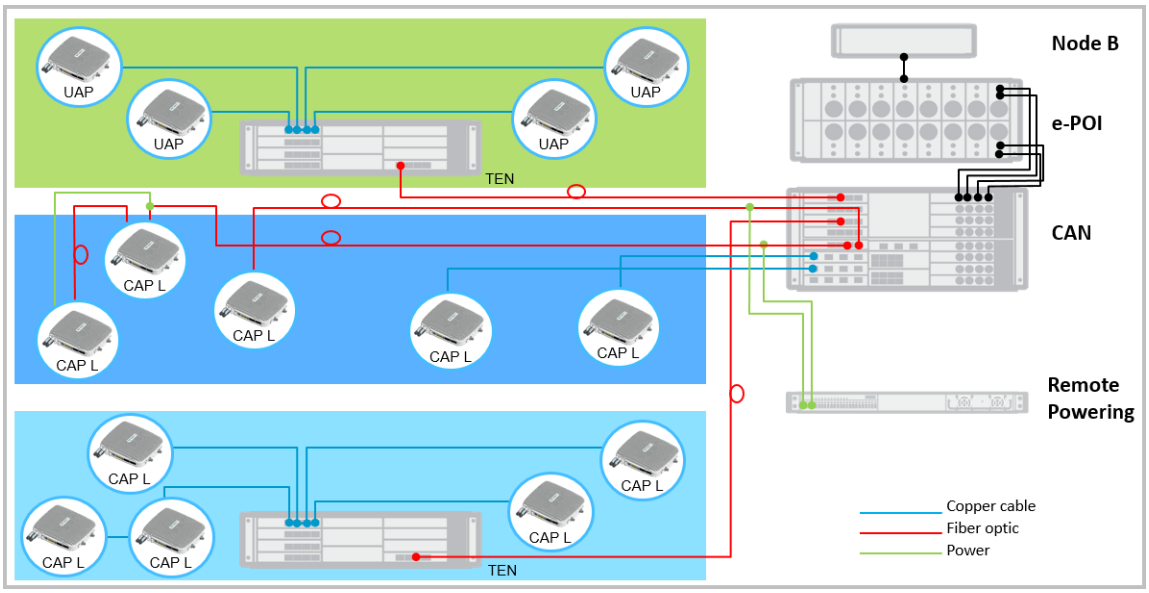

DISCLAIMER

This document has been developed by CommScope, and is intended for the use of its customers and customer support personnel. The information in this document is subject to change without notice. While every effort has been made to eliminate errors, CommScope disclaims liability for any difficulties arising from the interpretation of the information contained herein. The information contained herein does not claim to cover all details or variations in equipment, nor to provide for every possible incident to be met in connection with installation, operation, or maintenance. This document describes the performance of the product under the defined operational conditions and does not cover the performance under adverse or disturbed conditions. Should further information be desired, or should particular problems arise which are not covered sufficiently for the purchaser's purposes, contact CommScope.

CommScope reserves the right to change all hardware and software characteristics without notice.

COPYRIGHT

© 2017 CommScope, Inc. All Rights Reserved.

This document is protected by copyright. No part of this document may be reproduced, stored in a retrieval system, or transmitted, in any form or by any means, electronic, mechanical photocopying, recording, or otherwise without the prior written permission of CommScope.

For patents see www.cs-pat.com.

TRADEMARKS

All trademarks identified by ® or ™ are registered trademarks or trademarks, respectively, of CommScope, Inc. Names of other products mentioned herein are used for identification purposes only and may be trademarks and/or registered trademarks of their respective companies.

Andrew Wireless Systems GmbH, 30-June-2017

This is NOT a CONSUMER device. It is designed for installation by FCC LICENSEES and QUALIFIED INSTALLERS. You MUST have an FCC LICENSE or express consent of an FCC Licensee to operate this device. Unauthorized use may result in significant forfeiture penalties, including penalties in excess of $100,000 for each continuing violation.

This is NOT a CONSUMER device. It is designed for installation by FCC LICENSEES and QUALIFIED INSTALLERS. You MUST have an FCC LICENSE or express consent of an FCC Licensee to operate this device. You MUST register Class B signal boosters (as defined in 47 CFR 90.219) online at www.fcc.gov/signal-boosters/registration. Unauthorized use may result in significant forfeiture penalties, including penalties in excess of $100,000 for each continuing violation.

TABLE OF CONTENTS

1 Using this Document 1
Document Revision History 2
Document Cautions and Notes 3
Abbreviations Used in this Guide 4

2 ION-E Series Hardware Overview 5
ION-E Series System Overview 6
Safely Working with ION-E Hardware 9
Equipment Symbols with CE Compliance 9
Health and Safety Precautions 9
Property Damage Warnings 10
Compliance and Standards Certification 11
FCC RF Exposure Requirements 11
EMC Standards 11
FCC and IC Standards 12

3 WCS-2 and WCS-4 Subracks and Modules 13
WCS-2 and WCS-4 Subracks and Modules 14
WCS Subrack Front Panel Card Slots and GUI Identification 15
WCS Subrack Back Panel Connectors 16
WCS Subrack Alarm Connector 17
WCS Fan Modules and Filters 18
System User Interface Card (SUI) 19
RF Donor Card (RFD) 20
Optical Transport Card (OPT) 21
Copper Transport Card (CAT) 22
Auxiliary Unit Transport Card (AUT) 23
Installing Subracks and PSUs in an Equipment Rack 24
Rack-Mounting the Subracks and PSU 24
Connect the Subrack and PSU Power and Communication Cables 25
Install the CAN and TEN Cards 27
Install SFP+ Transceivers in the OPT Cards 28
Connect the RFD Cards 29
Connect the CAT Cards 30
Connect the AUT Cards 32

4 Point of Interface (e-POI) Subracks 35
Point Of Interface (e-POI) Subrack 36
e-POI Subrack Back Panel Connectors 36
Interface Card (IFC) 37
e-POI Module 38
Installing an e-POI Subracks and Modules 39
Removing an e-POI Module from an e-POI Subrack 40
e-POI Subrack and Component Specifications 41

5 Power Supply Unit (PSU) 43
Power Supply Unit (PSU) 44
PSU Modules and Connectors 44
12 Vdc Power Module LEDs 45
57 Vdc Power Module LEDs 46
Installing PSUs 47

© June 2017 CommScope, Inc.

6 Universal Access Points 49
Identifying UAPs in the ION-E Software 50
UAPs and UAP-N25s 51
UAP-X 52
Installing UAPs 53
Using the UAP Ceiling Mount Assembly (PN 7683182-00) 53
Required Tools for a Standard UAP Ceiling Mount 53
Unpack and Inspect the Ceiling Mount Assembly 53
Standard Ceiling Mount Overview 54
Standard Ceiling Mount Installation Steps 55
Mounting a UAP Using a UAP Quick Release Ceiling Mount Kit 57
Required Tools for a Quick Release Ceiling Mount Kit 57
Unpack and Inspect the Quick Release Ceiling Mount Kit 58
Overview of Using a Quick Release Ceiling Mount Kit 58
Mount the UAP to the Ceiling 59
Connect the UAP Cables 61
Install the UAP 62
Mounting a UAP to a Wall Using the UAP Wall Mounting Kit (PN 7683181-00) 63
Required Tools for a Wall Mount 63
Unpack and Inspect the Wall Mounting Kit 64
Mount the UAP to a Wall 64
UAP, UAP-N25, and UAP-X Cable Requirements 67
Cascading a UAP, UAP-X, or UAP-N25 68
UAP Maintenance 69
Remove a UAP from a Ceiling Mount 69
Remove a UAP from a Wall Mount 70
Preventative UAP Maintenance 71
UAP Specifications 72
UAP Output Specifications 72
UAP Bandwidth Specifications 73

7 Carrier Access Point, Low Power (CAP L) 75
Identifying CAP Ls in the ION-E Software 76
CAP L Overview 77
CAP L Connectors, Ports, and LEDs 78
CAP L with an Optical Fiber Interface 79
CAP L with a Copper Interface and External DC Power 80
CAP L with a Copper Interface and Power Cat 6A Cable 81
Fan Interface Port 82
Powering a CAP L 82
CAP L Accessory Options 83
Fan Kit (PN 7724090-00) 84
CAP L Flat Mounting Bracket Kit (PN 7774353-00) 85
CAP L Power Supply / Hybrid Fiber Mounting Kit (PN 7774354-00) 86
CAP L 240W AC/DC Power Supply Kit (PN 7775087-00) 87
CAP OCTIS Kits (PNs 7773582-00 and 7760652-00) 88
Installing CAP Ls 89
Prepare for Installation 89
Recommended Tools 89
Recommended Materials 89
Determine the Power Consumption of the CAP L 90
Determine the CAP L Mounting Site 90
Mounting Orientation 93
Mounting Cautions 95
General Installation Safety Requirements 95
Guard Against Damage from Electro-Static Discharge 95
Unpack and Inspect the CAP L and Optional Accessories 96

M0201AAA Issue 1
© June 2017 CommScope, Inc.

Installing a CAP L 96
Mount the CAP L 96
Flat-Surface Mount a CAP L 97
Wall Mount a CAP L Using a Flat Mounting Bracket Kit (PN 7774353-00) 97
Wall Mount a CAP L Using a Power Supply / Hybrid Fiber Mounting Kit (PN 7774354-00) 100
Wall Mount a CAP L Using a 240W AC/DC Power Supply Kit (PN 7775087-00) 106
Ceiling Mount a CAP L 109
(Optional) Ground the CAP L 110
Connect the CAP L Cables 111
Cable a CAP L with an Optical Fiber Interface 111
Cable a CAP L with a Copper Interface and Power over Category 6A Cable 114
Cable a CAP L with a Copper Interface and Power over Ethernet 116
Cascading CAP Ls 118
CAP L Maintenance 119
Remove a CAP L from a Ceiling Mount 119
Remove a CAP L from a Wall Mount 120
Preventative CAP L Maintenance 121
CAP L Specifications 122
CAP L Output Specifications 122
CAP L Bandwidth Specifications 123

8 DCCS Global Technical Support 125
Contacting DCCS Global Technical Support 126
Telephone Helplines 126
Online Support 126
DCCS Technical Training 127
Accessing ION-E Series User Documentation 128
Hardware to Software Mapping Information 129

© June 2017 CommScope, Inc.

© June 2017 CommScope, Inc.

1

USING THIS DOCUMENT

Chapter Topics **Page**

Document Revision History 2
Document Cautions and Notes 3
Abbreviations Used in this Guide 4

This chapter provides information on how to use this hardware installation guide.

© June 2017 CommScope, Inc.

Document Revision History

Document #	Document Date	Technical Updates
M0201AAA	June 2017	Initial release. Introduces the new Carrier Access Point, Low Power (CAP L), and replaces the following ION-E Series user documentation: • hardware section of the *ION-E Series Software Version 2.0.0 User's Manual* (PN M0201A0D) • *ION-E Series Instructions for WCS Subracks* (PN M0201A1C) • *ION-E Series Instructions for Ceiling Mount* UAP (PN M0201A2A) • *ION-E Series Instructions for UAP Wall Mount* (PN M0201A3B) • *ION-E Series Instructions for UAP* (PN M0201A4A) • *ION-E Series Instructions for SUI, RFD, CAT, OPT, and AUT Cards* (PN M0201A5B) • *ION-E Series Instructions for e-POI* (PN M0201A7B) • *ION-E Series Instructions for UAP Quick Release Ceiling Mount* (PN M0201A8A).

© June 2017 CommScope, Inc.

Document Cautions and Notes

This document contains notes, cautions, and warnings. In general, cautions, warnings, and notes indicate the following:

The icon to the left is used to indicate a caution or warning. Cautions and warnings indicate operations or steps that could cause personal injury, induce a safety problem in a managed device, destroy or corrupt information, or interrupt or stop services.

The icon to the left indicates a caution or warning that pertains to laser equipment.

The icon to the left is indicates a caution or warning that pertains to Radio Frequency (RF).

The icon to the left is indicates a Note. Notes provide information about special circumstances.

© June 2017 CommScope, Inc.

Abbreviations Used in this Guide

AUT	Auxiliary Transport
AUX	Auxiliary
C	Celsius
CAN	Central Area Node
CAP L	Carrier Access Point, Low Power
Cat	Category
CAT	Copper Transport
COM	Communication or Common
dB	Decibel
dBc	Decibels (referenced to the carrier)
dBm	Decibel-milliwatts
DC	Direct Current
EFTA	European Free Trade Association
EMC	Electromagnetic Compatibility
EU	European Union
F	Fahrenheit
FCC	Federal Communications Commission
Gb	Gigabyte
Gbps	Gigabits per second
GHz	Gigahertz
IC	Industry Canada
IFC	Interface Card
kg	Kilogram
LCD	Liquid-Crystal Display
LED	Light Emitting Diode
MHz	Megahertz
Mm	Millimeter
MMF	Multi-Mode Fiber
NC	Normally Closed
NO	Normally Open
OAP	Optimized Access Point
OPT	Optical Transport
PN	Part Number
PoCAT	Power over Cate-gory 6A cable
PoE	Power over Ethernet
POI	Point of Interface
RAN	Regional-Area Network
RF	Radio Frequency
RFD	RF Donor
RTN	Return
RU	Rack Unit
SFP	Small Form-Factor Pluggable
SMF	Single-Mode Fiber
SUI	System User Inter-face
TEN	Transport Expan-sion Node
UAP	Universal Access Point
Vdc	Volts, direct cur-rent
W	Watts

© June 2017 CommScope, Inc.

ION-E Series Hardware Overview

2

Chapter Topics **Page**

ION-E Series System Overview 6
Safely Working with ION-E Hardware 9
Equipment Symbols with CE Compliance 9
Health and Safety Precautions 9
Property Damage Warnings 10
Compliance and Standards Certification 11
FCC RF Exposure Requirements 11
EMC Standards 11
FCC and IC Standards 12

This chapter provides information on the separate hardware components that an ION-E Series system can comprise.

© June 2017 CommScope, Inc.

ION-E Series System Overview

The ION-E is a unified wireless infrastructure platform defined around IT based architecture. It brings together licensed wireless and power, plus Gigabit Ethernet for WiFi into one wireless system that can scale to building size and is technology and spectrum agnostic and adaptive.

A basic ION-E system comprises the following main components, as shown in Figure 2-1.

- **Central Area Node (CAN)**—provides server-level control and primary signal distribution. 2U and 4U subrack options are available.
- **Transport Expansion Node (TEN)**—connects to a CAN using Multi-Mode or Single-Mode fiber as a secondary distribution point. 2U and 4U subrack options are available.
- **Access Point**—connects CAN/TEN to antennas or other wireless devices, and can be any of the following.
  - **Universal Access Point (UAP)**—connects the CAN/TEN to an internal antenna; receives data and power through Category 6A twisted pair cabling. Supports Gigabit Ethernet for WiFi, IP cameras, or other devices in addition to wireless over a common cable.
  - **UAP-X**—connects the CAN/TEN to an **external** antenna; otherwise functions the same as the standard UAP.
  - **Carrier Access Point, Low Power (CAP L)**—interfaces with the CAN/TEN via a CAT 6A cable, or via an optical link. On the downlink, the CAP L converts some or all of the data arriving at the CAP L to analog signals and sends them to the an antenna. On the uplink, received signals are digitized and serialized into data streams which are sent back to the CAN/TEN. Each CAP L contains up to four transceiver paths for RF coverage.

A WCS-2 and a WCS-4 can be configured for use as a CAN or a TEN. When the information in this guide applies to both configurations, the term "CAN/TEN" is used. When the information pertains to only one of the configurations, that configuration will be identified singularly as "CAN" or "TEN."

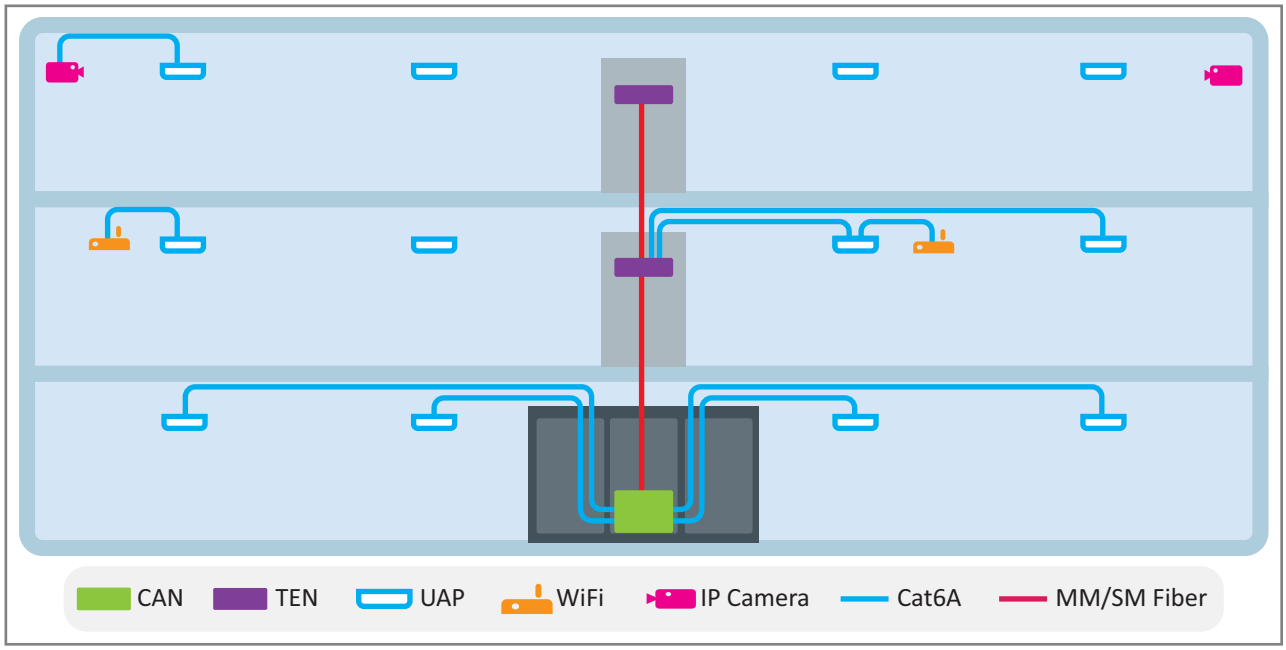

Figure 2-1. Basic ION-E System

© June 2017 CommScope, Inc.

The information in this document guides you through the installation of a CommScope ION®-E system, which supports the ION-E system components identified in Table 2-1 on page 8 (component graphics are not scaled to size).

For information on how to find the minimum software requirements for ION-E hardware, refer to "Hardware to Software Mapping Information" on page 129.

© June 2017 CommScope, Inc.

Table 2-1. *ION-E Series Hardware System Components Supported in this Manual*

Component	Description
WCS-4 Subrack—CAN or TEN	The WCS-4 Subrack is typically used as a CAN but can also serve as a TEN.
WCS-2 Subrack—TEN or CAN	The WCS-2 Subrack is typically used as a TEN, but can also serve as a CAN.
System User Interface Card (SUI)	The SUI provides local and LAN Ethernet connections and a USB port.
RF Donor Card (RFD)	The RFD is the interface for RF signals between the CAN and the BTS or eNode-B. Its four QMA female ports simultaneously transmits and receives signals.
Optical Transport Card (OPT)	The OPT provides a 10 Gb fiber connection between a CAN/TEN. Each OPT Card supports up to four SFP+ transceivers.
Copper Transport Card (CAT)	The CAT Card provides 10 Gb Cat6A connections between the CAN/TEN and the UAP.[1] CAT Cards also supply the remote power over Cat6A to the UAPs. Each CAT Card supports a maximum of six UAPs.
Auxiliary Unit Transport Card (AUT)	The AUT Card provides a 1 Gb pass-through connection between the CAN/TEN and the UAP for WiFi, IP cameras, or other 1 Gb Ethernet devices (and 100Mb devices in a future release).
Power Supply Unit (PSU)	The PSU houses two 12 Vdc Power Modules and two 57 Vdc Power Modules, which supply power to the WCS subracks, UAPs, and connected devices.
12 Vdc Power Module	A 12 Vdc Module plugs into the Power Supply Subrack to provide 12 Vdc power to the WCS and e-POI subracks.
57 Vdc Power Module	A 57 Vdc Module plugs into the Power Supply Subrack to provide remote power over Cat6A for the UAP and devices connected to the UAP.
UAP, UAP-N25	The Universal Access Point (UAP), which is connected to the ION-E system via Cat6A cabling, uses its internal antennas to transmit and receive over-the-air signals. It also supports Ethernet backhaul or an additional UAP through a second RJ45 jack.
UAP-X	The UAP-X is functionally identical to the UAP, but is designed to work with external antennas. A UAP-X has two QMA Female antenna ports that connect to external antennas, one each for Transmit (TX) and Receive (RX).
CAP L	Carrier Access Point, Low Power (CAP L) provides data and power through Copper, Single-Mode Fiber (SMF), or Multi-Mode Fiber (MMF), and supports Gigabit Ethernet for WiFi, IP cameras, or other devices in addition to wireless over a common cable.
Fan Module	The Fan Tray and Filter Modules cool the WCS and all of its Cards. • An AWCS-2 requires one Fan Tray. • A WCS-4 requires two Fan Trays.
e-POI Subrack	The e-POI Subrack supports up to eight e-POI RFMs and one IFC Module.
Point of Interface Card (e-POI RFM)	The e-POI-RFM Card is a low PIM attenuator that reduces high power RF signals from their source by 30 dB to interface with the RFD Cards.
Interface Card (IFC)	The IFC is used to set the subrack number of the e-POI subrack. It also provides a Status LED for each of the e-POI Modules in the subrack.

1 Unless otherwise noted, the use of “AP” collectively refers to the UAP, UAP-X, UAP-N25, and CAPs.

© June 2017 CommScope, Inc.

SAFELY WORKING WITH ION-E HARDWARE

The following sections provide important information that you should read and know before working with any ION-E hardware.

Equipment Symbols with CE Compliance

Table 2-2 identifies the CE markings used on ION-E hardware and defines what these markings mean, including required user compliance.

Table 2-2. *CE Compliance Labels*

Symbol	Meaning
ⓘ	Alert sign to R&TTE To be sold exclusively to mobile operators or authorized installers - no harmonised frequency bands, operation requires license. Intended use: EU and EFTA countries
CE 0700	Indicates conformity with the R&TTE directive 1999/5/EC certified by the notified body no. 0700.

Health and Safety Precautions

Observe all cautions and warnings listed in this section

A High leakage current ground (earth) connection to the Power Supply Subrack is essential before connecting the supply.

Laser radiation. Risk of eye injury in operation. Do not stare into the laser beam; do not view the laser beam directly or with optical instruments.

High frequency radiation in operation. Risk of health hazards associated with radiation from the antenna(s) connected to the unit. Implement prevention measures to avoid the possibility of close proximity to the antenna(s) while in operation.

© June 2017 CommScope, Inc.

Property Damage Warnings

Due to power dissipation, the power supply units may reach a very high temperature if not properly ventilated. Do not operate this equipment on or close to flammable materials.

ESD precautions must be observed. Before commencing maintenance work, use the available grounding (earthing) methodology to connect ESD protection measures.

Keep operating instructions within easy reach and make them available to all users.

Only license holders for the respective frequency range are allowed to operate this unit.

Read and obey all the warning labels attached to the unit. Make sure that all warning labels are kept in a legible condition. Replace any missing or damaged labels.

Make sure the unit's settings are correct for the intended use (refer to the manufacturer product information) and regulatory requirements are met. Do not carry out any modifications or fit any spare parts, which are not sold or recommended by the manufacturer.

© June 2017 CommScope, Inc.

Compliance and Standards Certification

This is class A equipment. This equipment can cause radio interference in domestic areas. In this case the operator can be asked to start preventive action.

FCC RF Exposure Requirements

For installations, which have to comply with FCC RF exposure requirements, the antenna selection and installation must be completed in a way to ensure compliance with those FCC requirements. Depending on the RF frequency, rated output power, antenna gain, and the loss between the repeater and antenna, the minimum distance D to be maintained between the antenna location and human beings is calculated according to this formula:

$$D_{[cm]} = \sqrt{\frac{P_{[mW]}}{4 * \pi * PD_{[mW/cm^2]}}}$$

where

- P (mW) is the radiated power at the antenna, i.e. the max. rated repeater output power in addition to the antenna gain minus the loss between the repeater and the antenna.
- PD (mW/cm^2) is the allowed Power Density limit acc. to 47 CFR 1.1310 (B) for general population / uncontrolled exposures which is
  - f (MHz) / 1500 for frequencies from 300MHz to 1500MHz
  - 1 for frequencies from 1500MHz to 100,000MHz

RF exposure compliance may need to be addressed at the time of licensing, as required by the responsible FCC Bureau(s), including antenna co-location requirements of 1.1307(b)(3).

EMC Standards

- For installations that have to comply with European EN50385 exposure compliance requirements, the following Power Density limits/guidelines (W/m^2) according to ICNIRP are valid:
  - 2 for frequencies from 10 MHz to 400 MHz
  - f (MHz) / 200 for frequencies from 400 MHz to 2 GHz
  - 10 for frequencies from 2 GHz to 300 GHz
- This unit complies with European standard EN60950.

© June 2017 CommScope, Inc.

FCC and IC Standards

Notice: For installations that have to comply with FCC/Industry Canada requirements:

English

This device complies with FCC Part 15. Operation is subject to the following two conditions: (1) this device may not cause interference, and (2) this device must accept any interference, including interference that may cause undesired operation of the device.

This device complies with Health Canada's Safety Code. The installer of this device should ensure that RF radiation is not emitted in excess of the Health Canada's requirement. Information can be obtained at http:

//www.hc-sc.gc.ca/ewh-semt/pubs/radiation/radio_guide-lignes_direct-eng.php.

Changes or modifications not expressly approved by the party responsible for compliance could void the user's authority to operate the equipment.

The antenna(s) used for this transmitter must be installed to provide a separation distance of at least 20 cm from all persons and must not be co-located or operating in conjunction with any other antenna or transmitter.

French

Cet appareil est conforme à FCC Partie15. Son utilisation est soumise à Les deux conditions suivantes: (1) cet appareil ne peut pas provoquer d'interférences et (2) cet appareil doit accepter Toute interférence, y compris les interférences qui peuvent causer un mauvais fonctionnement du dispositif.

Cet appareil est conforme avec Santé Canada Code de sécurité 6. Le programme d'installation de cet appareil doit s'assurer que les rayonnements RF n'est pas émis au-delà de I'exigence de Santé Canada. Les informations peuvent être obtenues:

http://www.hc-sc.gc.ca/ewh-semt/pubs/radiation/radio_guide-lignes_direct-fra.php

Les changements ou modifications non expressément approuvés par la partie responsable de la conformité pourraient annuler l'autorité de l'utilisateur à utiliser cet équipement.

La ou les antennes utilisées avec cet émetteur doivent être installées avec une séparation d'au minimum 20cm avec toute personne et ne doivent pas être co-localisées ou utilisées avec toute autre antenne ou tout autre émetteur.

For a Class A digital device or peripheral.

This equipment has been tested and found to comply with the limits for a Class A digital device, pursuant to EN55022 and part 15 of the FCC Rules. These limits are designed to provide reasonable protection against harmful interference when the equipment is operated in a commercial environment.

This equipment generates, uses, and can radiate radio frequency energy and, if not installed and used in accordance with the instruction manual, may cause harmful interference to radio communications. Operation of this equipment in a residential area is likely to cause harmful interference in which case the user will be required to correct the interference at his own expense.

© June 2017 CommScope, Inc.

WCS-2 AND WCS-4 SUBRACKS AND MODULES

3

Chapter Topics **Page**

WCS-2 and WCS-4 Subracks and Modules 14
WCS Subrack Front Panel Card Slots and GUI Identification 15
WCS Subrack Back Panel Connectors 16
WCS Subrack Alarm Connector 17
WCS Fan Modules and Filters 18
System User Interface Card (SUI) 19
RF Donor Card (RFD) 20
Optical Transport Card (OPT) 21
Copper Transport Card (CAT) 22
Auxiliary Unit Transport Card (AUT) 23
Installing Subracks and PSUs in an Equipment Rack 24
Rack-Mounting the Subracks and PSU 24
Connect the Subrack and PSU Power and Communication Cables 25
Install the CAN and TEN Cards 27
Install SFP+ Transceivers in the OPT Cards 28
Connect the RFD Cards 29
Connect the CAT Cards 30
Connect the AUT Cards 32

This chapter provides a product overview and installation instructions for the ION-E Series WCS-2 and WCS-4 Subracks.

© June 2017 CommScope, Inc.

WCS-2 and WCS-4 Subracks and Modules

This section provides information on the WCS-4 and WCS-2 Subracks (Figure 3-1), which dependent on their configuration, become a Central Area Nodes (CAN) or a Transport Expansion Nodes (TEN).

- The CAN is the server-level control and primary signal distribution within an ION-E system.
- The TEN is the secondary distribution point that connects to a CAN using Multi-Mode or Single-Mode fiber.
- The WCS-4 is four Rack-Units (RUs) high, and is typically used as a CAN, but can also serve as a TEN.
- The WCS-2 is two RUs high, and is typically used as a TEN, but can also serve as a CAN.

Figure 3-1. WCS-2 and WCS-4 Subracks

© June 2017 CommScope, Inc.

WCS Subrack Front Panel Card Slots and GUI Identification

The following graphic and table describe the slots in which each card should be installed. Note that a port is identified as a decimal point after the slot label. For example, a CAT Card installed in slot L1 would have four ports: L1.1, L1.2, L1.3, and L1.4.

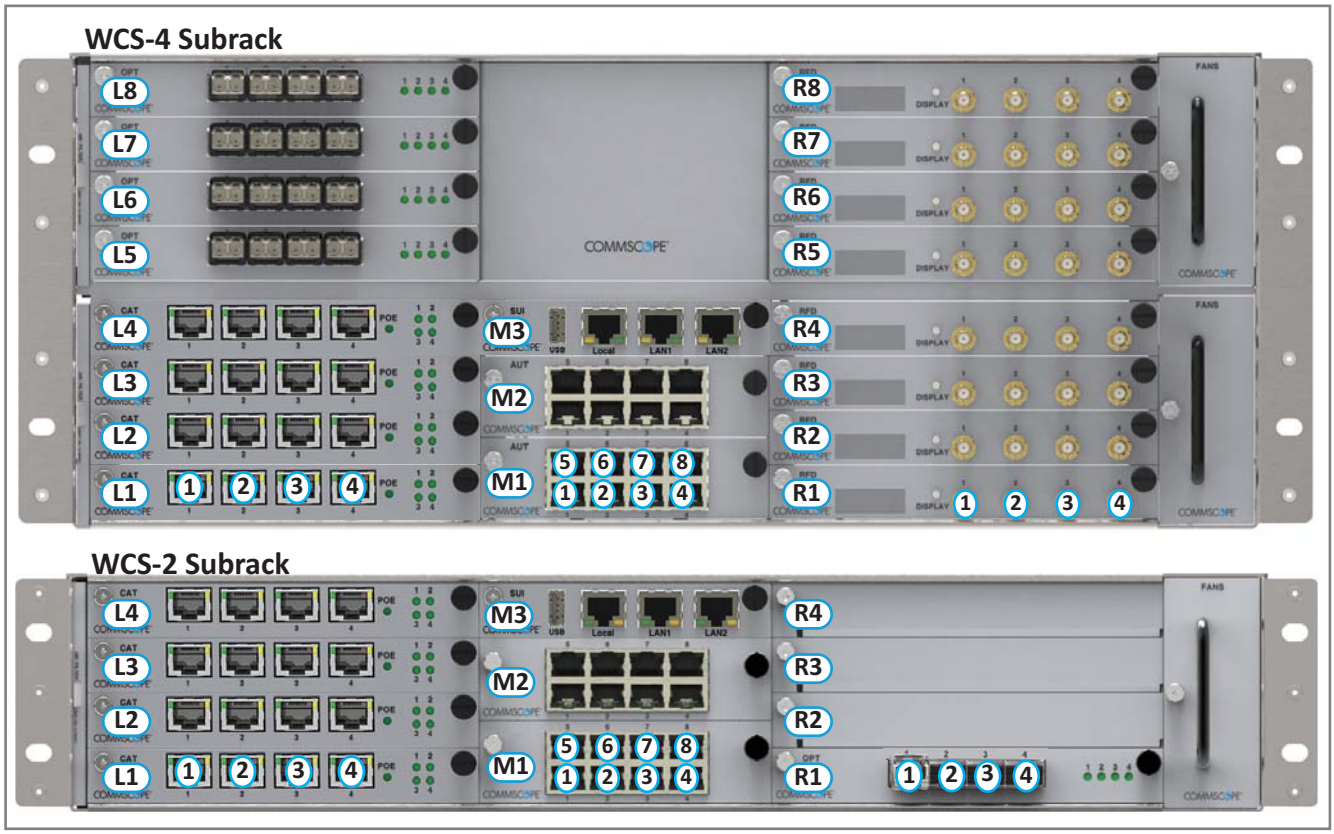

Install this Card …	… in this Slot	
Optical Transport Card (OPT)	**CAT** L1 - L8	**TEN** R1
Copper Transport Card (CAT)	L1 - L4 [1]	
System User Interface Card (SUI)	M3	
Auxiliary Unit Transport Card (AUT)	M1 - M2	
RF Donor Card (RFD)	**CAT** R1 - R8	**TEN** N/A [2]

1 Remote Power for UAPs and CAP Ls over Cat6A only available in slots L1 - L4.

2 WCS Subracks configured as TENs do not currently support RFD Cards.

The alphanumeric numbering of the slots and ports correspond to the slot and port identification used in the ION-E GUI, as shown in Figure 3-2.

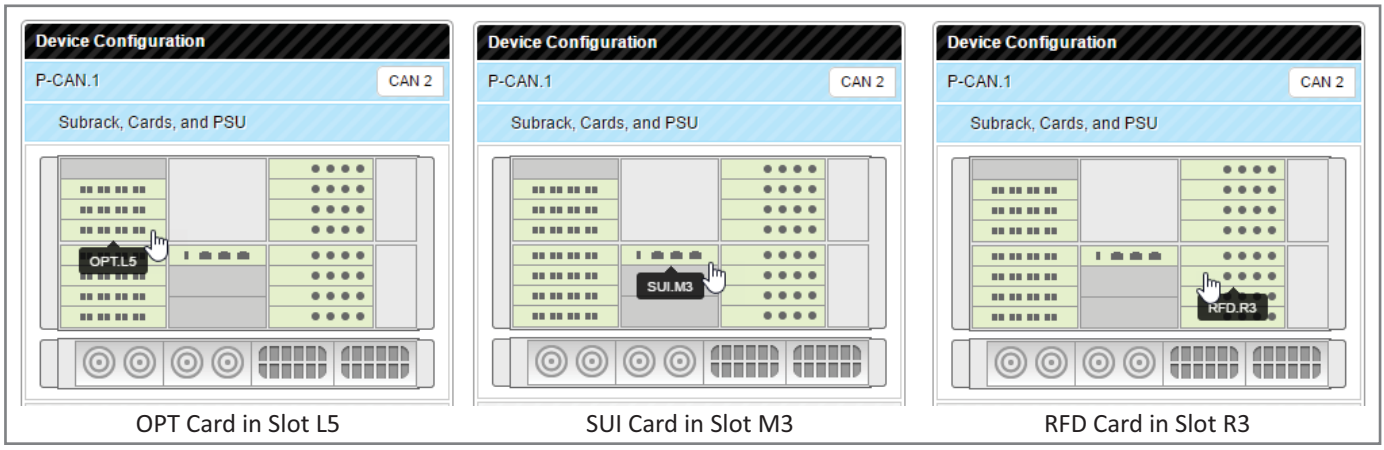

Figure 3-2. Slot and Port Designations in the ION-E GUI

WCS Subrack Back Panel Connectors

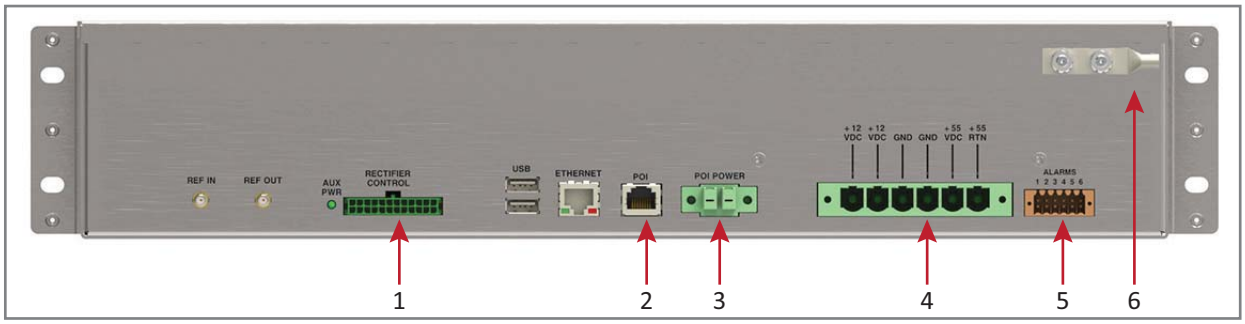

Ref. #	Component	Description
1	Rectifier Control connector	24-pin connector for PSU communication
2	POI connector	POI Communication
3	POI Power connector	12 Vdc to e-POI Subrack
4	Power connector	Inputs to the 12 Vdc Module and the 57 Vdc Module
5	Alarm connector	Dry contact input and output; see "WCS Subrack Alarm Connector" on page 17.
6	Ground stud	Ground (earth) connection to the Power Supply Subrack

UNRESOLVED: **This looks like it is the rear of the WCS-2. Are the connectors laid out the same on WCS-4?**

© June 2017 CommScope, Inc.

WCS Subrack Alarm Connector

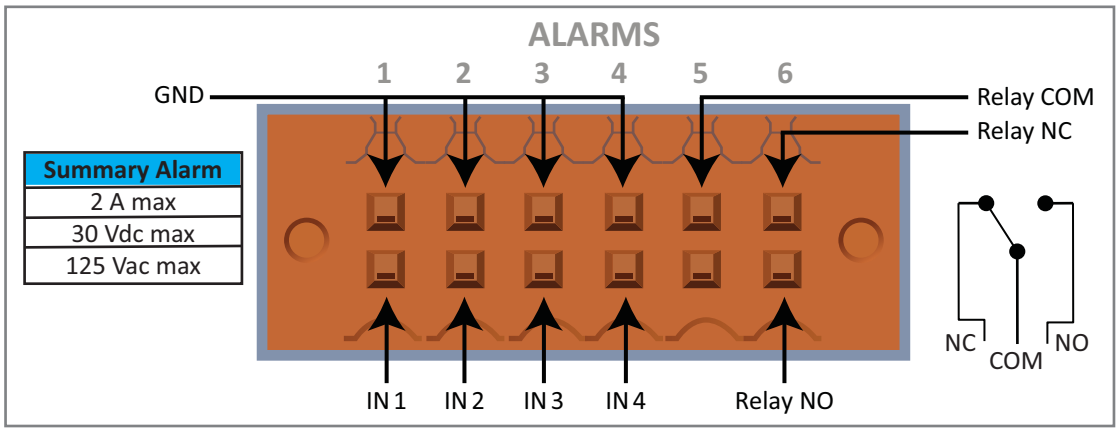

The Alarm connector on the back panel of the WCS-4 and WCS-2 subracks has

- four opto-isolated (chassis-ground referenced) dry contact inputs to monitor external devices
- one Summary Alarm Relay that energizes when specific alarms are triggered—the thresholds of which are shown in the preceding graphic. [**Which alarms? We need to match the Summary Alarms shown above with the actual corresponding alarms.**]

WCS Fan Modules and Filters

The following rules apply to the WCS Fan Modules and Filters:

- Fan Modules and Filters must be installed for WCS operation, but they can be replaced without system interruption.
- Filters are inserted on the left side of the WCS; two filters are required for a WCS-4.
- Fan Modules (are inserted on the right side of the WCS chassis; two Fan Modules are required for a WCS-4.

© June 2017 CommScope, Inc.

System User Interface Card (SUI)

The SUI provides local and LAN Ethernet connections and a USB port. You install a SUI Card in Slot M3 of the WCS-2 or WCS-4 Subrack.

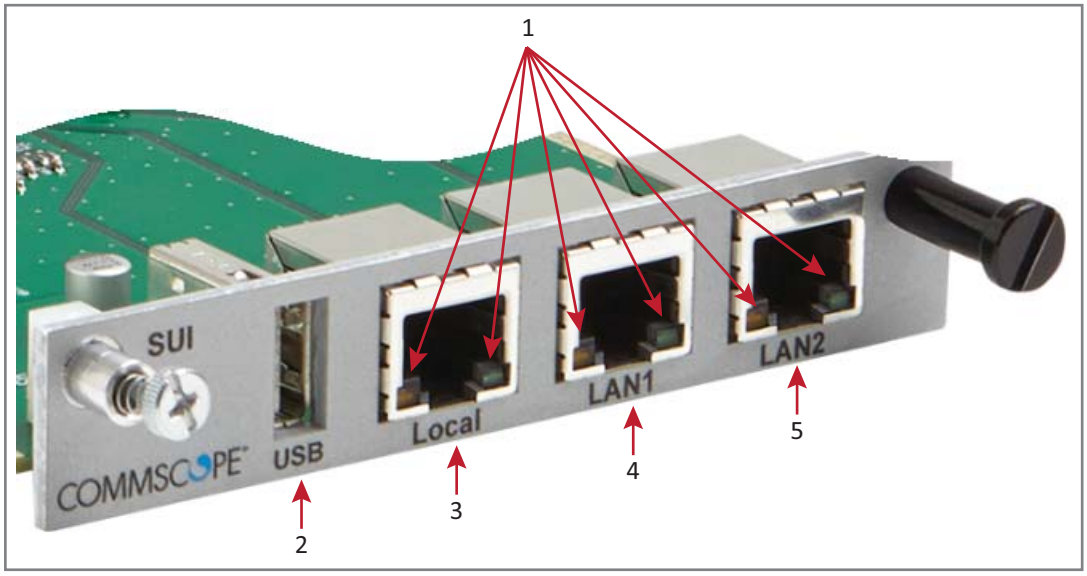

SIU Card LEDs			
Ref #	**LED**	**LED Color**	**Description**
1	Left	• Off	• No link.
		• Green	• Link established with device to which the port is connected.
		• Flashing green	• Activity is occurring on that port.
	Right	• Off	• 10 Mb connection established.
		• Yellow	• 100 Mb connection established.

SIU Card Connectors			
Ref #	**Component**	**Device**	**Function**
2	USB port	2.0 USB	Connects to a a local laptop to allow the transfer of files.
3	Local port		Connects to a local laptop; fixed IP address.
4	LAN1 port	RJ-45 jack (female)	Reserved for future use.
5	LAN2 port	RJ-45 jack (female)	Connects to a LAN or modem; DHCP or specified fixed IP address

© June 2017 CommScope, Inc.

RF Donor Card (RFD)

The RFD is the interface for RF signals between the CAN and the BTS or eNode-B. You install RFD Cards in Slots R1 - R8 of a WCS-2 or WCS-4 Subrack that is configured as a CAN.

TENs do not support the use of RFD Cards.

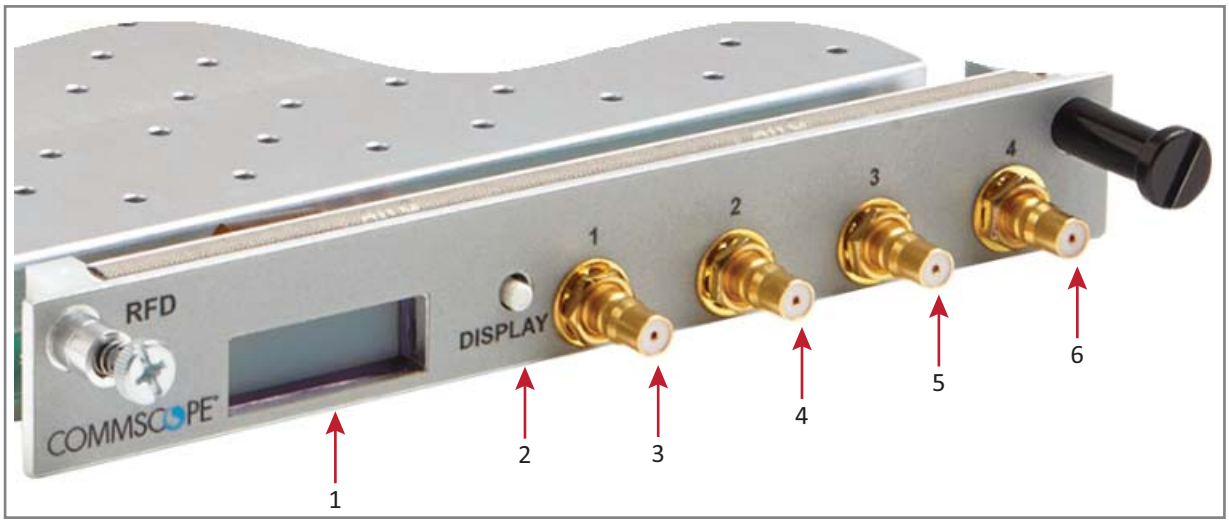

Ref #	Component	Device	Function
1	Display	LCD	• The first line of the display shows the port number and band. • The second line of the display shows the service provider or **multiple** if multiple providers are connected to the port.
2	Display button	Push button	Push once to turn on the display backlight, and then push four more times to cycle through the four ports.
3	Port 1 [1]	Female QMA connector (shown populated)	Connect to the UL/DP Ports 1 - 4 on an e-POI Module. • RF Paths: simultaneous transmit and receive. • Protection: relays with adjustable trip threshold. • Frequency: 380 - 2700 MHz
4	Port 2 [1]		
5	Port 3 [1]		
6	Port 4 [1]		
1	Path 1 and Path 2 of an LTE MIMO BTS must be connected to either Ports 1 and 2 of the RFD Card as a pair, or to Ports 3 and 4 as a pair.		

© June 2017 CommScope, Inc.

Optical Transport Card (OPT)

The OPT provides a 10 Gb fiber connection between a CAN and a TEN. Where you install an OPT Card in a WCS-2 or WCS-4 Subrack is dependent whether the subrack is configured as a CAN or a TEN:

- CAN—Slot L1 - L8.
- TEN—Slot R1 only, and the SFP+ transceiver must be installed in the OPT SFP Port 1.

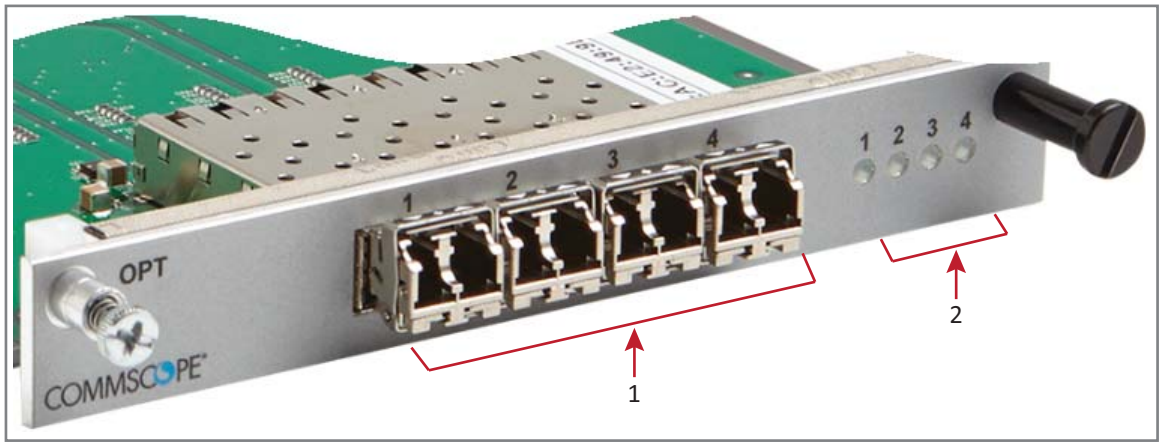

OPT Card SFP Connectors			
Ref #	**Component**	**Device**	**Function**
1	1 - 4	10 Gbps SFP port for Multi-Mode or Single-Mode fiber	Support for up to four SFP+ transceivers; each SFP port provides high-speed fiber connections between a CAN and a TEN.

OPT Card SFP Port LEDs [1, 2]			
Ref #	**LED**	**LED Color**	**Description**
2	1 - 4	• Off	• The OPT Card has no power, or the OPT Card is plugged into the wrong subrack slot (see "WCS Subrack Front Panel Card Slots and GUI Identification" on page 15).
		• Green	• Optical link is established with device to which the port is connected.
		• Yellow	• The OPT Card is powered and initialized, but the link with the corresponding SFP port is not established.

1 SFP Port LED numbers correspond with the SFP port numbers.

2 When the OPT Card is installed in a TEN, only SFP Port LED 1 is functional.

Copper Transport Card (CAT)

The CAT Card provides power and 10 Gbps data over Cat6A cables to UAPs. You install a CAT Card in Slots L1 - L4 of the WCS-2 or WCS-4 Subrack.

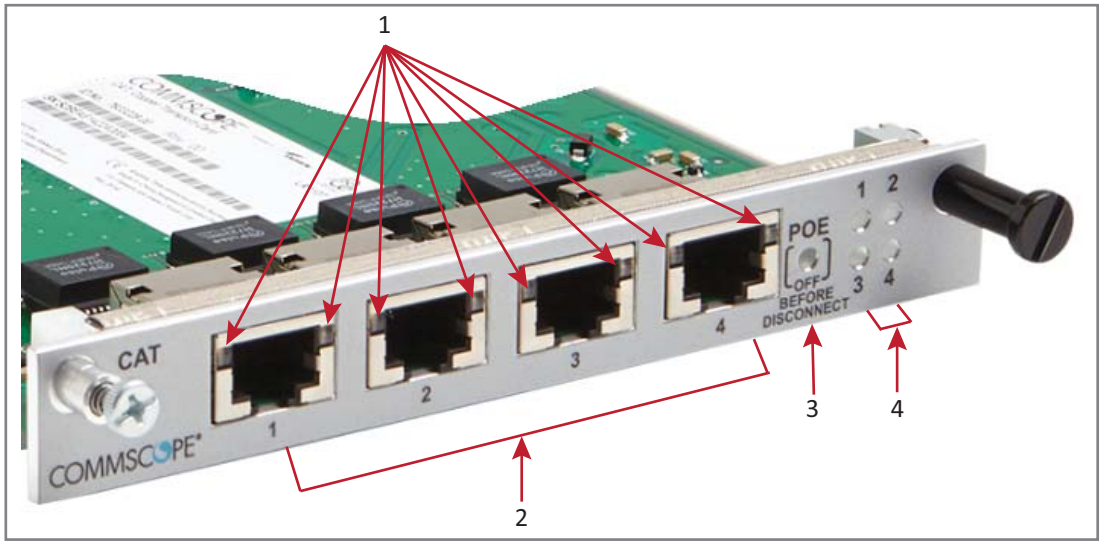

CAT Card LEDs			
Ref #	**LED**	**LED Color**	**Description**
1	RJ45 1 - 4	• Off	• No link between the CAT Card and the UAP[1] to which the port is connected.
		• Green	• Indicates that a 10G link is established.
		• Yellow	• Indicates that a 1G link is established.[2]
3	POE	• Off	• Power over Cat6A between the CAT Card and the UAP has not been established.
		• Green	• Power over Cat6A established between the CAT Card and the UAP.
4	Port	• Off	• No power to the subrack.
		• Red	• Active fault on that link.
1 Unless otherwise noted, the use of "UAP" collectively refers to the UAP, UAP-X, UAP-N25, and the CAP L. 2 1G link is not currently supported.			

CAT Card Connectors			
Ref #	**Component**	**Device**	**Function**
2	Port 1 - 4	RJ45, Cat6A	Connects the CAN/TEN to UAPs over Cat6A cables.[1] • Each CAT Card can support a maximum of six UAPs. • A CAN/TEN with four CAT cards installed can support up to twenty-four UAPs.
1 Unless otherwise noted, the use of "UAP" collectively refers to the UAP, UAP-X, UAP-N25, and the CAP L.			

© June 2017 CommScope, Inc.

Auxiliary Unit Transport Card (AUT)

The AUT Card provides a 1 Gb pass-through connection between the CAN/TEN and the UAP for WiFi, IP cameras, or other 1 Gb Ethernet devices. You install an AUT Card in Slot M1 or M2 of the WCS-2 or WCS-4 Subrack.

For information on the internal mapping between CAT Cards and AUT Cards, go to "Connect the AUT Cards" on page 32.

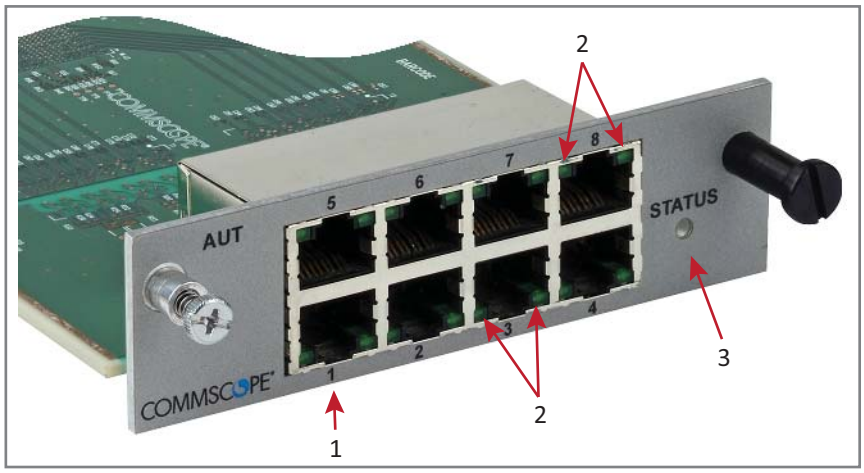

AUT Card LEDs			
Ref #	**LED**	**LED Color**	**Description**
2	Left LED on RJ45 Ports 1 - 8	• Off	• No activity on that port.
		• Flashing green	• Activity on that port.
	Right LED on RJ45 Ports 1 - 8	• Off	• Port is transmitting 1 Gbps.
		• Green	• Port is transmitting 100 Mbps or is not connected (**Left LED will be off**).
3	STATUS	• Off	• Error on the AUT Card, or AUT Card is not receiving power.
		• Green	• AUT Card functioning as expected.
		• Red	• AUT Card is experiencing an error.

AUT Card Connectors			
Ref #	**Component**	**Device**	**Function**
1	Ports 1 - 8	RJ45 ports	Connects the CAN/TEN to WiFi, IP Camera, or other 1Gb Ethernet devices; provides the 1Gb pass-through connection between the CAN/TEN and the UAP.[1]
1 Unless otherwise noted, the use of "UAP" collectively refers to the UAP, UAP-X, UAP-N25, and the CAP L.			

UNRESOLVED: **The RJ45 ports are reversed top (5 - 6) vs. bottom (1 - 4). Are the LEDs the same regardless of vertical orientation of plug, or are the LEDs also reversed (top left is bottom right)?**

UNRESOLVED: **If the Right LED is green, to know if it means 100 Mbit/s vs. not connected, to be not connected, wouldn't the Left LED be off?**

UNRESOLVED: **Confirm Gbps can replace Gbit/s and Mbps = Mbit/s**

© June 2017 CommScope, Inc.

Installing Subracks and PSUs in an Equipment Rack

The following sections tell how to install ION-E WCS and e-POI subracks and the PSU in an equipment rack.

As with any piece of IT equipment, placing the ION-E system connection behind a secure firewall is highly recommended

Rack-Mounting the Subracks and PSU

The following graphic shows two configurations for mounting ION-E subracks and PSUs in an equipment rack. In any ION-E installation, the following rules must be followed:

- PSUs must be mounted above the WCS for support.
- 1 RU of air space required above the PSU.
- Support rails are required for WCS Subracks.
- Support rails are required for e-POI Subracks.
- Support rails must not block airflow.

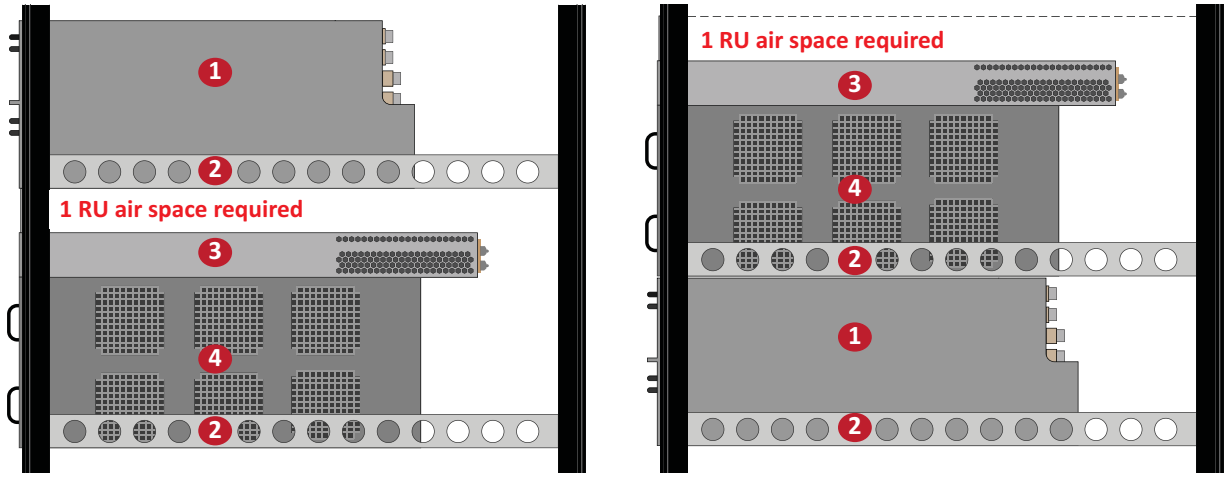

1. e-POI Subrack (4RU high)
2. Support rail
3. Power Supply Unit (PSU)
4. WCS Subrack (WCS-2 is 2 RU high and WCS-4 is 4RU high)

Disconnect all input to the PSU before adding it to or removing it from an equipment rack.

© June 2017 CommScope, Inc.

Connect the Subrack and PSU Power and Communication Cables

1 Connect the rear-panel power, communication, and control cables as shown in the following graphic.

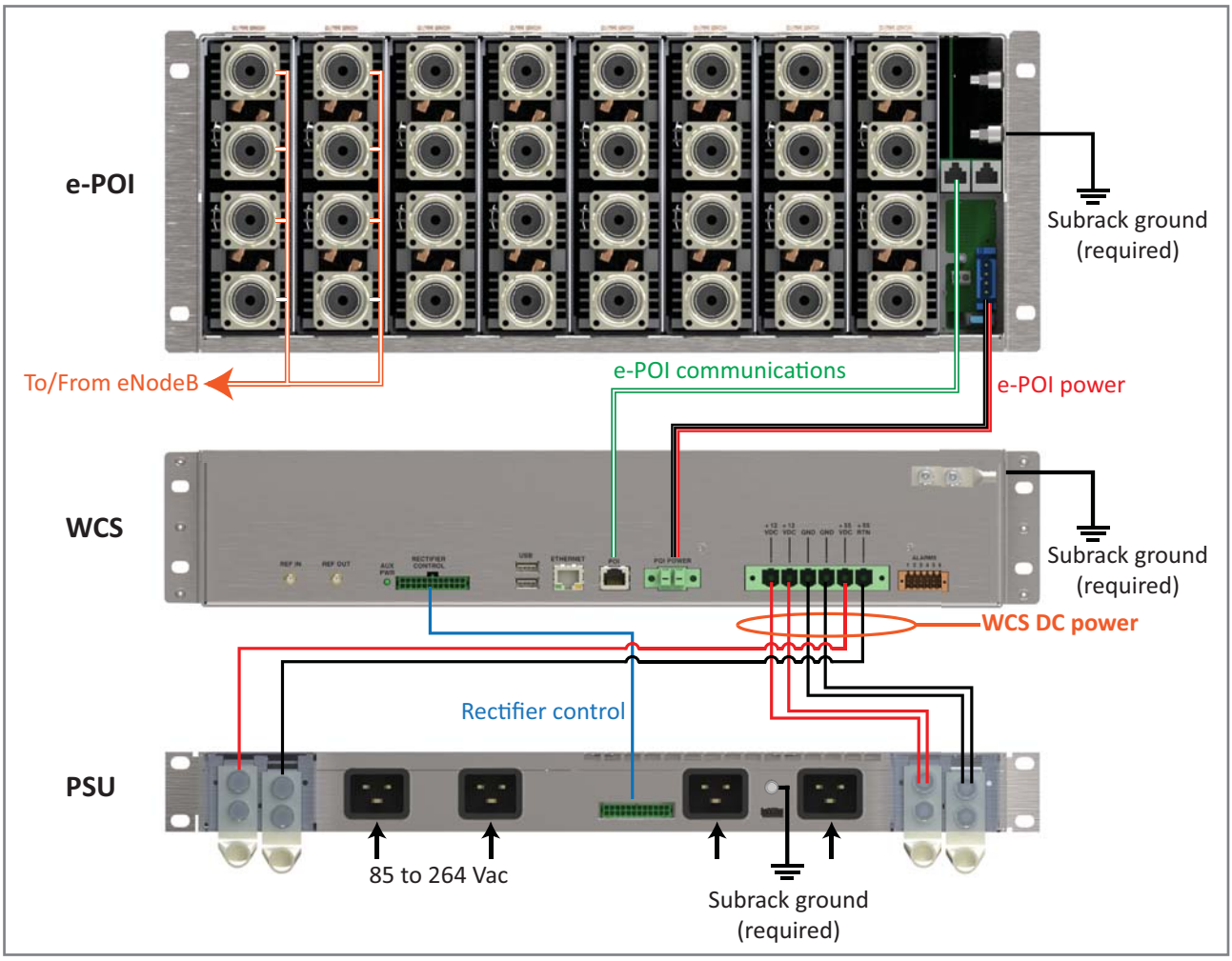

2 Connect the DC Power cable and the Rectifier Control cables.

CAUTION! **To prevent SEVERE damage to the WCS Subrack, confirm that all AC power cables are unplugged from the rear of the PSU BEFORE plugging/unplugging the WCS Power or Rectifier Control cables into/from the WCS subrack.**

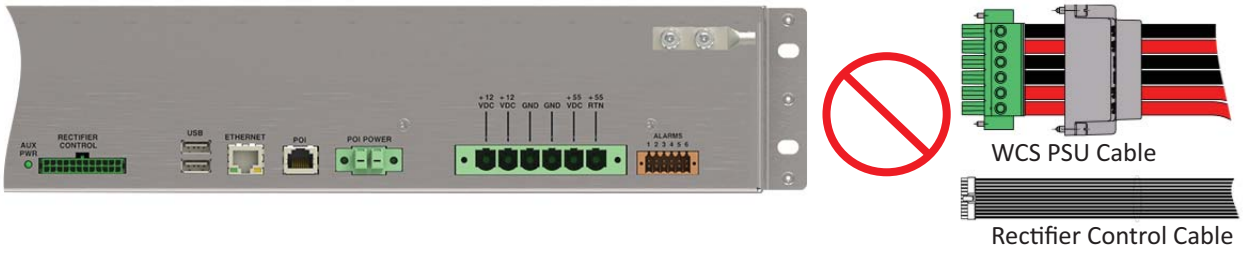

a Do one of the following before connecting the WCS PSU Cable or the Rectifier Control Cable:

- Confirm that all AC power cables are unplugged from the rear of the PSU.
- Remove 12 Vdc Power Modules and 57 Vdc Power Modules from the PSU.

b Plug the DC power cable connector, which is attached to the rear of the PSU, into the WCS Subrack power connector, and then use a flat-blade screwdriver to tighten the two mounting screws.

To prevent damage to the WCS, make sure you the two mounting screws have been tightened enough that the DC Power cable is secure and cannot be accidentally dislodged.

c Slide the Power Connector shell over the subrack power connector and tighten the two thumbscrews to attach it to the WCS Subrack.

d Plug the Rectifier Control Cable (shown to the right) into the WCS Rectifier Control connector; press it in until you hear it click and lock into place.

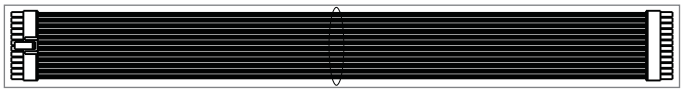

e Plug the other end of the Rectifier Control Cable to the matching connector (unlabeled) on the rear of the PSU.

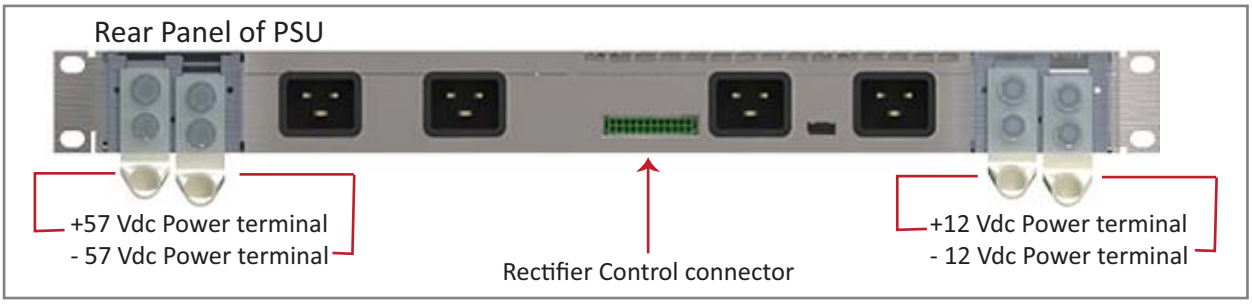

3 Connect the Ground stud on the WCS, PSU, and e-POI subracks to a suitable ground (earth) according to local and national electrical codes.

 © June 2017 CommScope, Inc.

Install the CAN and TEN Cards

1 If necessary, remove the blank faceplate(s) from the slot(s) in which the DART is to be installed.
   - **a** Loosen the two thumb screws that secure the blank faceplate(s) to the Host Unit chassis.
   - **b** Carefully withdraw the blank DART faceplate from the chassis.
   - **c** Reserve the blank faceplates for future use.

Do not remove the blank faceplate from a slot in which a card will not be installed. To maximize airflow through the WCS chassis, blank panels must be installed in all empty Card slots.

2 Slide the card into the slot that it will occupy, and then push it back until its faceplate is flush against the subrack chassis.

3 Tighten the two thumbscrews that secure the card in the subrack chassis.

4 Do not leave any unoccupied slots open; replace blank faceplates, as necessary..

To maximize airflow through the WCS chassis, blank panels must be installed in all empty Card slots. If additional blank faceplates are required, you can order them from CommScope (see "Contacting DCCS Global Technical Support" on page 126).

5 Follow the rules listed below to install the CAN and TEN cards into the WCS-2 or WCS-4 Subrack.

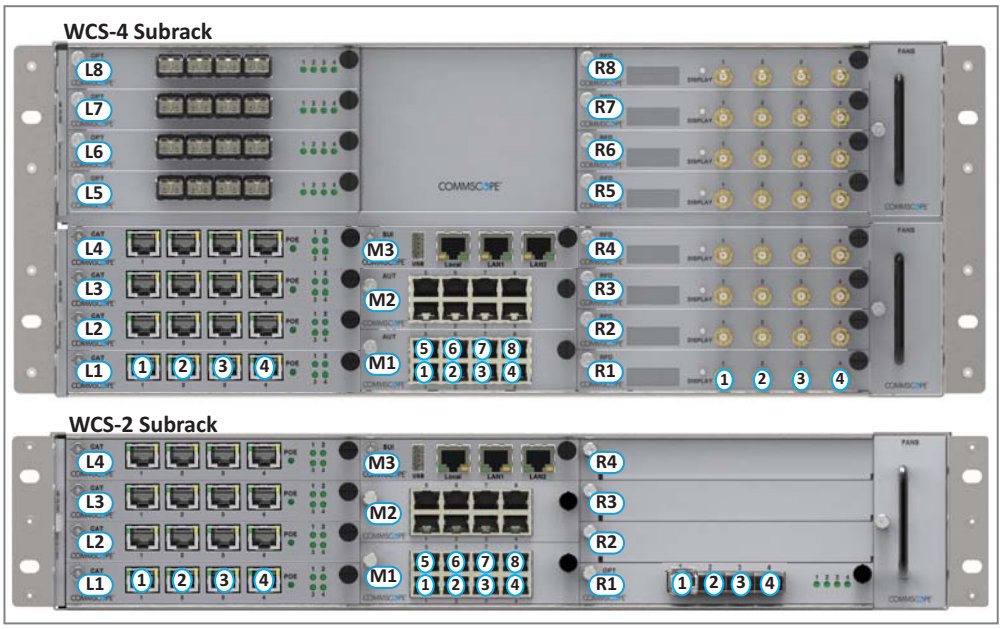

Placement of cards to create a CAN	
Card Slot	**Install this Card**
L5 - L8	OPT Card
L1 - L4 [1]	CAT Card
R1 - R8	RFD Card
M3	SUI Card
M1 - M2	AUT Card (optional)

1 Can also be used for additional OPT Cards.

Placement of cards to create a TEN [2]	
Card Slot	**Install this Card**
R1	OPT Card; use Port 1 to connect to the CAN
L1 - L4	CAT Card
M3	SUI Card
M1 - M2	AUT Card (optional)

2 TENs do not support RFD Cards.

Install SFP+ Transceivers in the OPT Cards

1. Follow the steps in "Install the CAN and TEN Cards" on page 27 to install the OPT Card into the WCS Subrack, as needed for this installation:
   - CAT: Slots L1 - L8
   - TEN: Slot R1
2. Use the system design to identify which OPT Card ports will be used in this system.
3. Obtain the required number of SFP+ Transceivers.
4. Slide the SFP into the OPT Card port identified in Step 2, and push the SFP into the Opt Card until you hear it click into place.

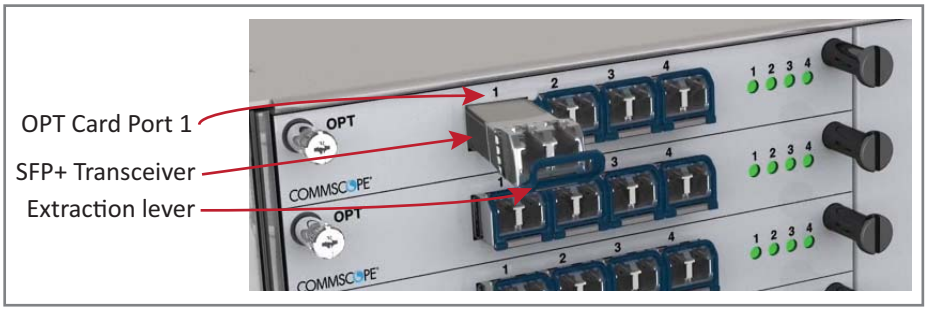

Should you need to remove an SFP+ Transceiver, press down on its extraction lever, and then carefully pull the transceiver out of the slot.

UNRESOLVED: Connect to what? R1.1 to CAN - otherwise? Cable?

© June 2017 CommScope, Inc.

Connect the RFD Cards

1 Follow the steps in "Install the CAN and TEN Cards" on page 27 to install the RFD Cards into the WCS Subrack Slots R1 - R8, as needed for a CAN configuration.

TENs do not support RFD Cards.

2 Connect RF cables from the BTS/eNodeB or e-POI to the duplex QMA connectors of the RFD cards.

- SISO services such as CDMA, UMTS, GSM, and LTE SISO can be connected to any active port.
- LTE MIMO pairs must be connected on the same RFD Card, as a pair to: Port 1 and Port 2 or to Port 3 and Port 4.

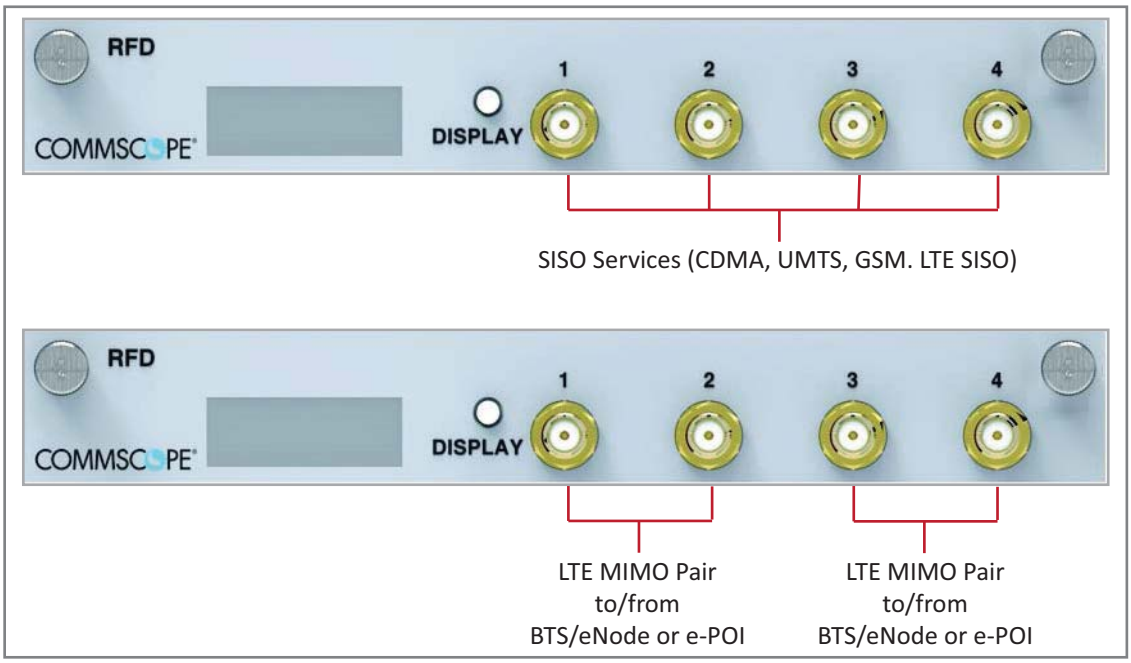

3 If the signal levels of the BTS exceed the maximum input level of +27 dBm, an e-POI RF card or other suitable attenuator must be used to attenuate the signal. For optimum PIM performance, the composite level into a Donor (RFD Card) port should be less than 16 dBm. If only one carrier is in a band, PIM is probably not a concern. For the case of two or more carriers in a band, spurious intermods due to PIM could land in the UL causing interference. Whether or not PIM will cause interference depends on the spacing between UL and DL and the frequencies of active carriers.

© June 2017 CommScope, Inc.

Connect the CAT Cards

1. Follow the steps in "Install the CAN and TEN Cards" on page 27 to install the CAT Cards into the WCS Subrack Slots L1 - L4, as needed for this CAT/TEN installation.
2. Use Cat6A cables (23 AWG minimum) to connect up to four UAPs to the CAT Card ports 1 - 4 (one per port). Whether or not the UAP is cascaded determines how you connect the CAT Card to a UAP, as described below.
   - **Non-Cascaded UAPS**
     To connect up to four individual, non-cascaded UAPs to the CAT Card via ports 1 - 4 (one per port).
     - UAP, UAP-N25, and UAP-X: connect the CAT Card port to the UAP Main port.
     - CAP L: connect the CAT Card port to the CAP L Optical Port 1.

     An Ethernet device such as a camera can be connected to the AUX port of a UAP if AUT Cards are installed in the TEN or CAN.

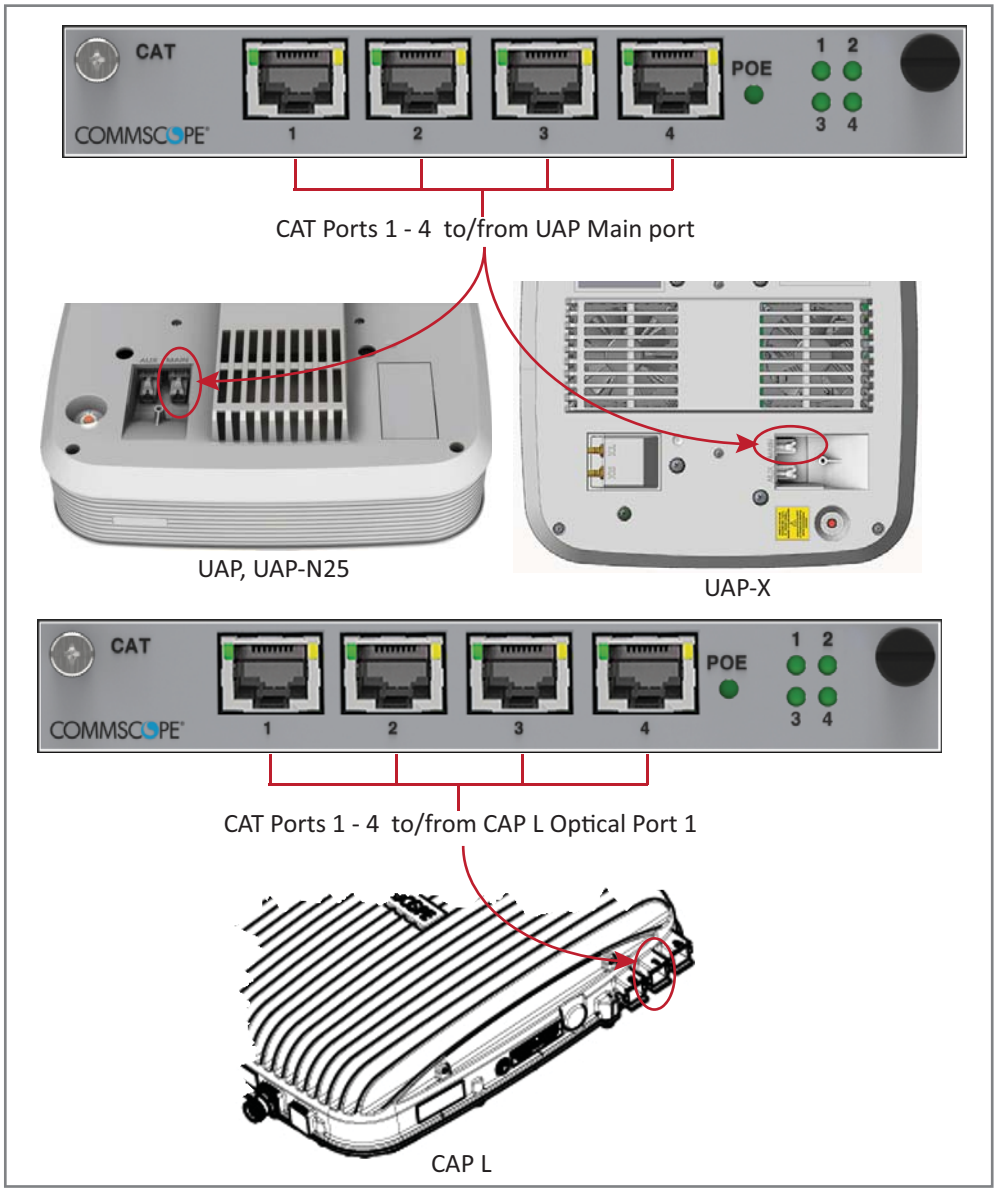

© June 2017 CommScope, Inc.

- **Cascaded UAPS**
  To connect up to three cascaded pairs of UAPs to the CAT Card via ports 1 - 4 (one pair per port with one port unused).
  - UAP, UAP-N25, and UAP-X: connect the CAT Card port to the UAP Main port.
  - CAP L: connect the CAT Card port to the CAP L Optical Port 2.

  Cascaded UAPs do not support Ethernet devices. Other combinations of cascaded and non-cascaded UAPs are also possible as long as the total number of UAPs connected to a CAT Card does not exceed six.

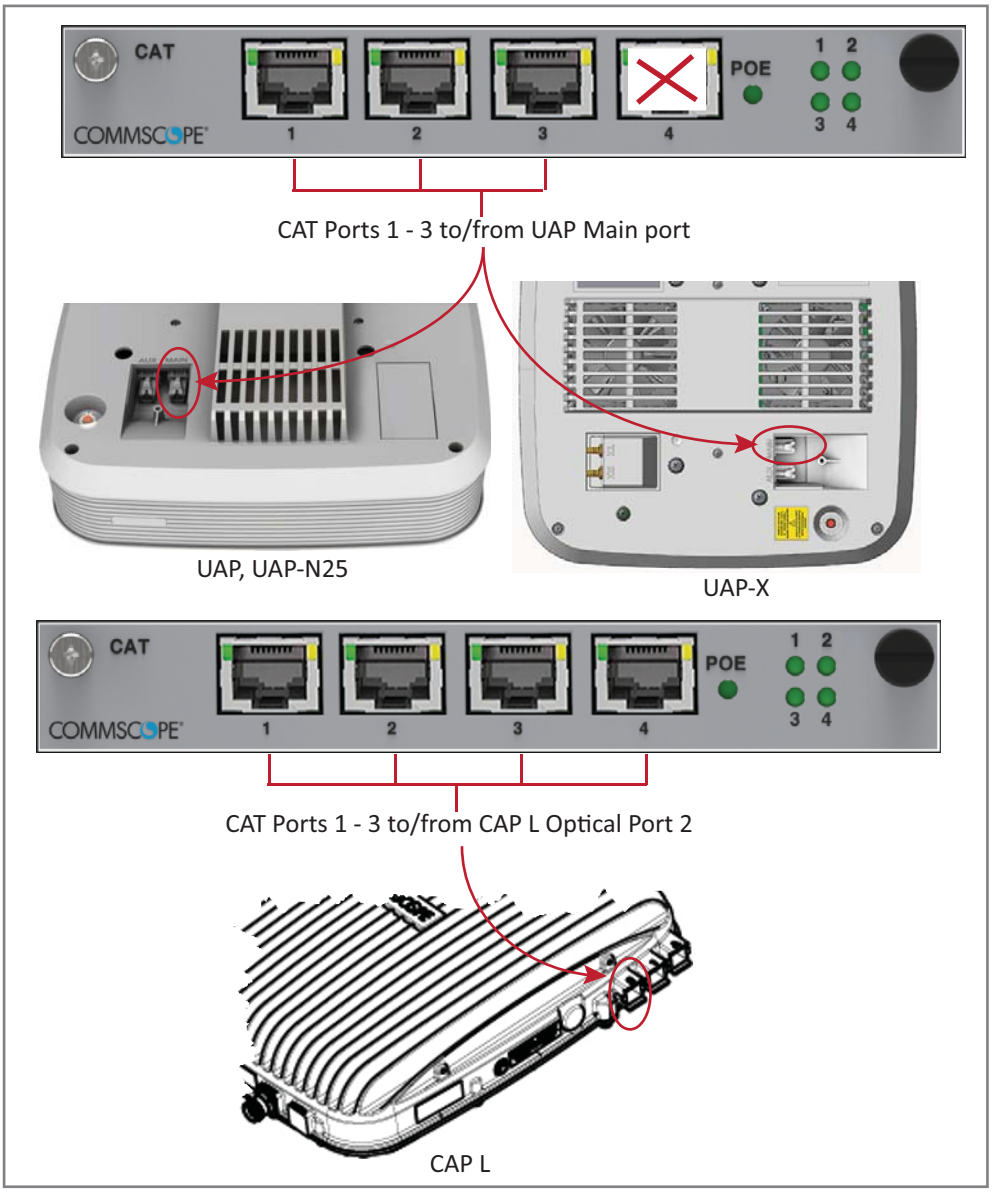

Connect the AUT Cards

The following rules apply to the AUT Card ports 1 - 8.

- The outside network that supports the Ethernet device connected to the UAP must be connected to the corresponding AUT Card and port of the subrack containing the CAT card to which the UAP is connected. Ethernet backhaul over the optical link is not supported.
- Because the path from the UAP AUX port to an AUT port path is a pass-through connection, no extra network setup procedures for the Ethernet device are required.
- Because the UAP's AUX port is configured to support a second UAP by default, there will be a delay before the Ethernet backhaul path at the AUT Card is ready to use when the device is initially connected. When an Ethernet device is connected to the AUX port of a UAP, ION-E detects the device, re-flashes the UAP to support the device, and then reboots the UAP. The UAP will perform the re-flash and reboot process whenever the UAP or Ethernet device connected to the AUX port is changed. The UAP's blue LED will blink while re-flashing without interrupting service, but the UAP will experience a short service interruption of approximately 1.5 minutes when it reboots.
- The AUT path is independent of the signal set assigned to a UAP, however, the maximum transport bandwidth for the UAP is reduced from 320 MHz to 280 MHz when an Ethernet device is connected to the UAP.
- The AUX port of a cascaded (secondary) UAP cannot be used to connect an Ethernet device.
- The AUT Card ports do not supply power, however, the UAP does supply Remote Power over Cat6A to connected Ethernet devices.
- 1 Gbit/s and 100 Mbit/s Ethernet devices are supported.

© June 2017 CommScope, Inc.

Figure 3-3 and Table 3-1 show the internal mapping between CAT Cards and AUT Cards. There is a specific relationship between the slot in which the CAT and AUT Cards are installed, and the CAT Card and AUT Card ports. For example:

- The CAT Card slot/port combination of **L1.1** always maps to AUT Card slot/port combination **M1.1**
- The CAT Card slot/port combination **L4.4** always maps to AUT Card slot/port combination **M2.8**.

This internal mapping provides the Ethernet backhaul for Ethernet devices connected to the Ethernet ports on the AUT Card.

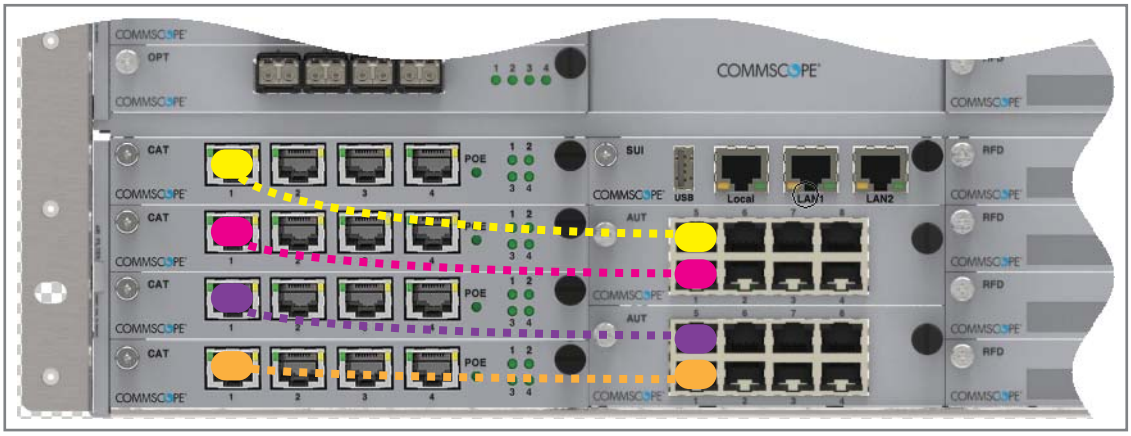

Table 3-1. *Internal Mapping of CAT Card Slots/Ports to AUT Card Slots/Ports*

WCS Slot	CAT Port	AUT Slot	AUT Port
L1	1	M1	1
L1	2	M1	2
L1	3	M1	3
L1	4	M1	4
L2	1	M1	5
L2	2	M1	6
L2	3	M1	7
L2	4	M1	8

WCS Slot	CAT Port	AUT Slot	AUT Port
L3	1	M2	1
L3	2	M2	2
L3	3	M2	3
L3	4	M2	4
L4	1	M2	5
L4	2	M2	6
L4	3	M2	7
L4	4	M2	8

Figure 3-3. Example of Internal Mapping of CAT Card Ports to AUT Ports

Use the preceding information and the following steps to connect the AUT Card(s) to the ION-E system.

1. Follow the steps in "Install the CAN and TEN Cards" on page 27 to install the AUT Card(s) into the WCS Subrack Slots M1 - M2, as needed for this CAT/TEN installation.
2. Refer to Figure 3-3 and Table 3-1 to connect Ethernet cables from the Ethernet devices to the AUT Card's RJ45 ports.

© June 2017 CommScope, Inc.

© June 2017 CommScope, Inc.

4

POINT OF INTERFACE (E-POI) SUBRACKS

Chapter Topics **Page**

Point Of Interface (e-POI) Subrack 36
e-POI Subrack Back Panel Connectors 36
Interface Card (IFC) 37
e-POI Module 38
Installing an e-POI Subracks and Modules 39
Removing an e-POI Module from an e-POI Subrack 40
e-POI Subrack and Component Specifications 41

This chapter provides a product overview and installation instructions for the ION-E Series Point of Interface (e-POI) Subracks.

UNRESOLVED: **The current e-POI instruction sheet has 7/16 DIN connectors. We need to update the instructions to the now0used 4.3-10 connectors. Request for information out to Dieter Schiele, who is out of the office until 3July17.**

UNRESOLVED: **Also, not sure why the e-POI was not included in the *ION-E Series Software Version 2.0.0 User's Manual* (PN M0201A0D), but I am adding it to this new ION-E HW install guide.**

© June 2017 CommScope, Inc.

Point Of Interface (e-POI) Subrack

The universal ION-E Point Of Interface (e-POI) Subrack provides power, housing, and communications for up to eight e-POI RF Donor (RFD) Cards. [what does the "e" in e-POI mean?]

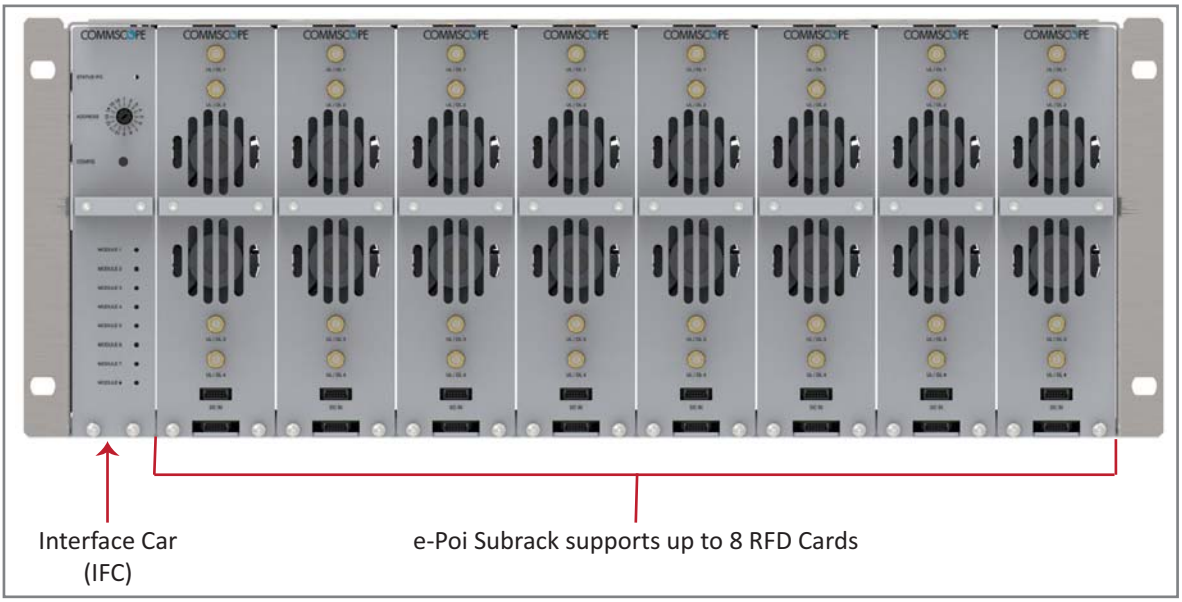

e-POI Subrack Back Panel Connectors

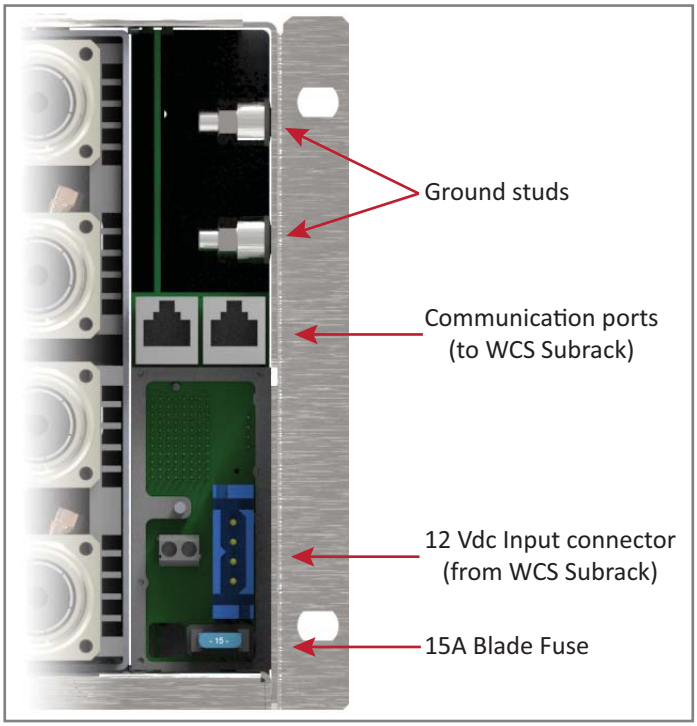

© June 2017 CommScope, Inc.

Interface Card (IFC)

The Interface Card (IFC) provides communications, status, and alarms for the e-POI Modules installed in the e-POI Subrack.

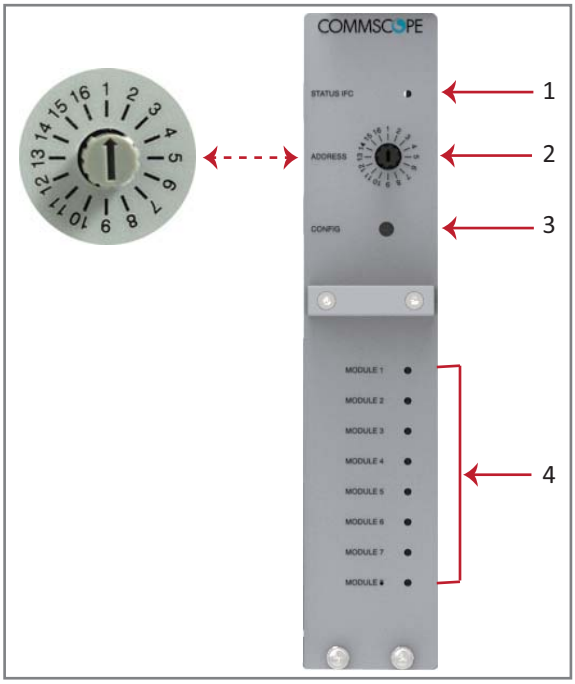

IFC LEDs			
Ref #	**LED**	**LED Color**	**Description**
1	Status	• Off	• IFC not fully seated in slot or not receiving power.
		• Green	• IFC functioning to specification.
		• Red	• Active alarm on IFC.
4	e-POI Module Status 1 - 8	• Off	• e-POI Module in corresponding slot is not receiving power.
		• Green	• e-POI Module in corresponding slot is functioning to specification. RFD Card Status LED must be green before connecting corresponding RF signals to input.
		• Red	• e-POI Module in corresponding slot has active temperature alarm.

IFC Connectors			
Ref #	**Component**	**Device**	**Function**
2	Address switch	Rotary dial	Must be set to **1**.
3	Config button	Pushbutton	Alerts ION-E Software to scan for and remove references to removed RFD Cards; see "Removing an e-POI Module from an e-POI Subrack" on page 40.

UNRESOLVED: **Not sure about IFC Status LED. In original e-POI instructions, graphic labeled it the "IFC module status," but the definition referred to "e-POI" so is this Status for the IFC or the full e-POI Subrack?**

UNRESOLVED: **For e-POI Module Status LEDS" Red state, original doc said was "IFC temperature alarm," which does not make sense, as there are 8 LEDs. However, please verify that my correction above is correct.**

© June 2017 CommScope, Inc.

e-POI Module

The e-POI Modules provide a wide-band, high power, low- PIM, interface and attenuation for the ION-E RFD Cards.

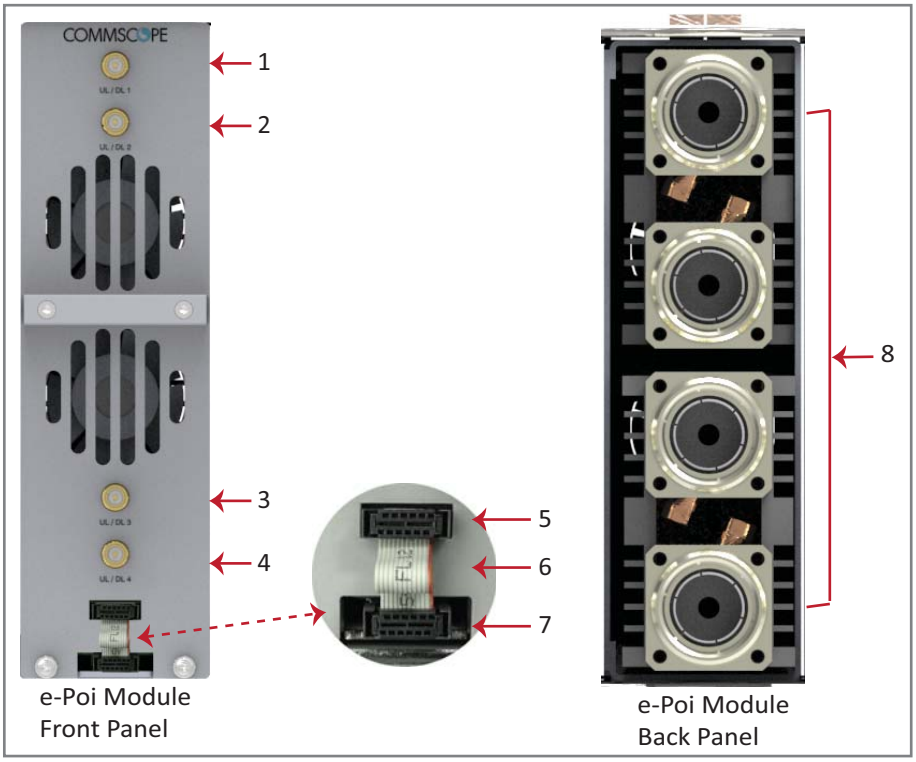

Ref #	Component	Device	Function
1	UL/DP Port 1	Female QMA connector	Connect to the RFD Card Ports 1 - 4.
2	UL/DP Port 2		
3	UL/DP Port 3		
4	UL/DP Port 4		
5	Module Power/Com port		
6	Ribbon cable [1]		
7	e-Poi Subrack Power/Com port		
8	UL/DL Ports	7/16 DIN connectors	Connect to the eNodeB.

1 The Ribbon cable is connected after the e-POI Module is installed in the e-POI Subrack.

© June 2017 CommScope, Inc.

Installing an e-POI Subracks and Modules

UNRESOLVED: **I could not find any installation steps. Emulate what was provided for WCS subracks?**

© June 2017 CommScope, Inc.

Removing an e-POI Module from an e-POI Subrack

The ION-E Software automatically detects when an e-POI Module is added to an e-POI Subrack. If you need to remove an e-POI Module, you must do the following:

1. Disconnect the Ribbon cable from the e-POI Module that you are removing from the e-POI Subrack.
2. Loosen the two thumbscrews on the bottom of the e-POI Module and pull it from the subrack.
3. Press the Config button on the IFC for 5 seconds. This tells the ION-E Software to scan and delete the removed e-POI Module from inventory and clear any alarms related to that e-POI Module.
4. Wait for the e-POI Module Status LEDS on the IFC to flash off and then on, which indicates that the IFC has been reconfigured.

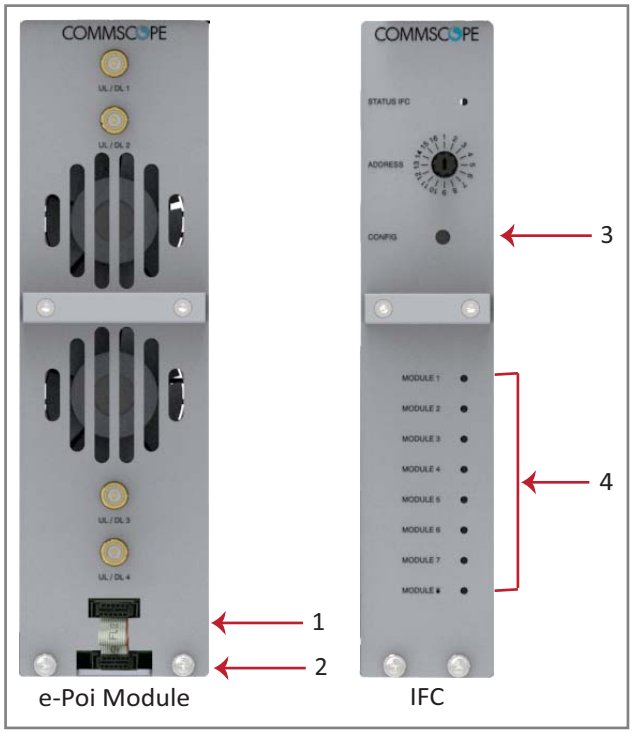

© June 2017 CommScope, Inc.

e-POI Subrack and Component Specifications

Table 4-1. *e-POI Subrack Specifications*

Parameter	Specification	Notes
Height x width x depth, mm	4U x 19" x 395	
Weight, kg*	7.7	
Operating temperature, °C	-5 to +50 Support rails are required for rack mounting	

Table 4-2. *e-POI Module Specifications*

Parameter	Specification	Notes
Operational frequency, MHz	300 to 2700	
Attenuation, dB	• 30 ±2 698-2700 MHz • 35.5 ±3.5 380-450 MHz • 33.5 ±3.2 450-698 MHz	
RF input power	+46 dBm	
PIM @ 2x20 Watts (3rd order)	-153 dBc	
Input voltage, Vdc / Power consumption	12/10 Watts	

© June 2017 CommScope, Inc.

© June 2017 CommScope, Inc.

Power Supply Unit (PSU)

5

Chapter Topics **Page**

Power Supply Unit (PSU) 44
PSU Modules and Connectors 44
12 Vdc Power Module LEDs 45
57 Vdc Power Module LEDs 46
Installing PSUs 47

This chapter provides a product overview and installation instructions for the ION-E Series Power Supply Unit (PSU).

© June 2017 CommScope, Inc.

Power Supply Unit (PSU)

The Power Supply Unit (PSU) is a subrack that houses two 12 Vdc Power Modules and two 57 Vdc Power Modules, which provide power to the WCS subracks, UAPs, and connected devices.

PSU Modules and Connectors

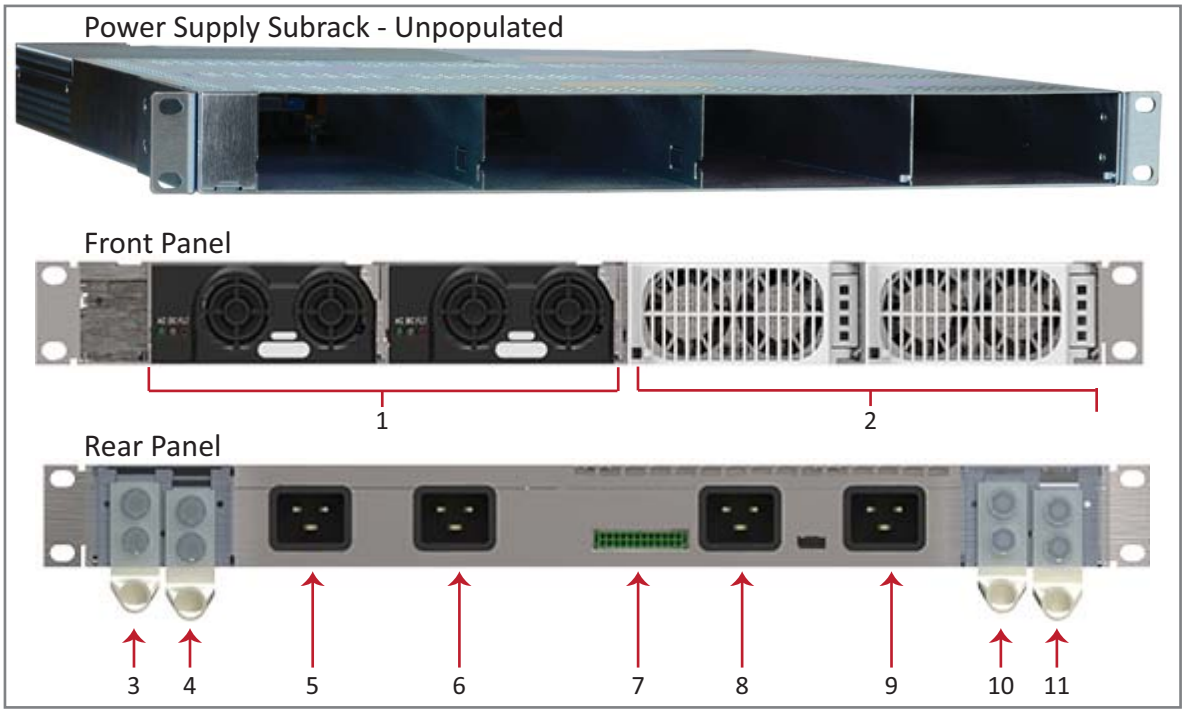

Ref #	Component	Device	Function
1	12 Vdc Power Module	Power module	Plugs into the Power Supply Subrack to provide 12 Vdc power to the WCS and e-POI subracks.
2	57 Vdc Power Module	Power module	Plugs into the Power Supply Subrack to provide remote power over Cat6A for the UAP and devices connected to the UAP.[1]
3	+57 Vdc Output	Power terminal	Provides the connection point for the Positive (Red Wire).
4	-57 Vdc Output	Power terminal	Provides the connection point for the RTN Negative (Black Wire).
5	AC Input (IEC 60320 C19)	Power connector	Provides the connection point for the for 57V module Slot 4.
6	AC Input (IEC 60320 C19)	Power connector	Provides the connection point for the for 57V module Slot 3.
7	Rectifier control connector	24 pin-terminal block	Provides the connection point for the to the WCS.
8	AC Input (IEC 60320 C19)	Power connector	Provides the connection point for the for 12V module Slot 2.
9	AC Input (IEC 60320 C19)	Power connector	Provides the connection point for the for 12V module Slot 1.
10	+12 Vdc Output	Power terminal	Provides the connection point for the Positive (Red Wire).
11	-12 Vdc Output	Power terminal	Provides the connection point for the RTN Negative (Black Wire).
1 Unless otherwise noted, the use of “UAP” collectively refers to the UAP, UAP-X, UAP-N25, and the CAP L.			

© June 2017 CommScope, Inc.

12 Vdc Power Module LEDs

Ref #	LED	LED Color	Description
1	AC	Green	AC input is within the specified range.
2	DC	Green	DC output is within the specified range.
3	FLT (Fault)	Red	There is no AC input or a failure has been detected in the 12 Vdc Power Module. The Fault LED activates under the following conditions: • If two 12 Vdc Power Modules are installed in the PSU, and the AC input is removed (cable unplugged) from one of the modules. • If only one 12 Vdc Power Module is installed in the PSU, and AC power is removed.

© June 2017 CommScope, Inc.

57 Vdc Power Module LEDs

REF #	LED	LED Name
1		AC OK
2		DC OK
3		Service
4		Fault

Condition	AC OK	DC OK	Service	Fault
Unit is functioning to specification	On	On	Off	Off
Thermal shutdown	On	On	On	Off
Defective fan, blown AC fuse in Power Module, boost stage failure, over voltage latched shutdown	On	Off	Off	On
No AC <15 mS (single unit)	Off	On	Off	Off
AC present but not within limits	Blinks	Off	Off	Off
AC not present	Off	Off	Off	Off
Over current	On	Blinks	Off	Off
Non-catastrophic internal failure (any detectable fault that does not shut down the unit)	On	On	Off	On
Communications fault (RS485 mode)	On	On	Off	Blinks

© June 2017 CommScope, Inc.

Installing PSUs

UNRESOLVED: **I could not find any installation steps.**

UNRESOLVED: **Do we have any power consumption specs?**

© June 2017 CommScope, Inc.

© June 2017 CommScope, Inc.

UNIVERSAL ACCESS POINTS

6

Chapter Topics **Page**

Identifying UAPs in the ION-E Software 50
UAPs and UAP-N25s 51
UAP-X 52
Installing UAPs 53
Using the UAP Ceiling Mount Assembly (PN 7683182-00) 53
Required Tools for a Standard UAP Ceiling Mount 53
Unpack and Inspect the Ceiling Mount Assembly 53
Standard Ceiling Mount Overview 54
Standard Ceiling Mount Installation Steps 55
Mounting a UAP Using a UAP Quick Release Ceiling Mount Kit 57
Required Tools for a Quick Release Ceiling Mount Kit 57
Unpack and Inspect the Quick Release Ceiling Mount Kit 58
Overview of Using a Quick Release Ceiling Mount Kit 58
Mount the UAP to the Ceiling 59
Connect the UAP Cables 61
Install the UAP 62
Mounting a UAP to a Wall Using the UAP Wall Mounting Kit (PN 7683181-00) 63
Required Tools for a Wall Mount 63
Unpack and Inspect the Wall Mounting Kit 64
Mount the UAP to a Wall 64
UAP, UAP-N25, and UAP-X Cable Requirements 67
Cascading a UAP, UAP-X, or UAP-N25 68
UAP Maintenance 69
Remove a UAP from a Ceiling Mount 69
Remove a UAP from a Wall Mount 70
Preventative UAP Maintenance 71
UAP Specifications 72
UAP Output Specifications 72
UAP Bandwidth Specifications 73

This chapter provides a product overview and installation instructions for the ION-E Series Universal Access Points (UAPs) that can be deployed in an ION-E system. UAPs allow transmission between the ION-E equipment and antennas and Ethernet devices (such as WiFi and IP cameras).

- "UAPs and UAP-N25s" on page 51
- "UAP-X" on page 52.

This installation guide uses "UAP" to collectively refer to the UAP, UAP-X, and UAP-N25. Differences will be identified by specific UAP product name.

For information on the Carrier Access Point, Low Power (CAP L), go to "Carrier Access Point, Low Power (CAP L)" on page 75.

© June 2017 CommScope, Inc.

Identifying UAPs in the ION-E Software

UAP numbering is based on the CAT cards slot and port numbers in the associated CAN or TEN and whether the UAP is directly connected to the CAT card (a) or connected to the AUX port of another UAP (b).

The ION-E GUI labels UAPs as follows:

<DisplayName>.<Slot ID>.<Port#><a or b>

Where

- **<DisplayName>** is the UAP name, such as **UAP** or **UAP-X**
- **<Slot ID>** is the WCS-2 or WCS-4 Subrack slot (L1 to L8), shown as a alpha-numerical integer from **L1** - **L8**
- **<Port #>** is the CAT Card Port number (1 - 4), shown as a numerical integer from **1** - **4**
- **<a or b>** is whether the UAP is the main/primary UAP (**a**) or the cascaded/secondary UAP (**b**).

Table 6-1. *UAP Identification in the ION-E Software*

WCS Slot	CAT Port	Primary UAP (Direct Connect)	Secondary UAP (AUX Port Connect)
L1	1	UAP.L1.1a	UAP.L1.1b
L1	2	UAP.L1.2a	UAP.L1.2b
L1	3	UAP.L1.3a	UAP.L1.3b
L1	4	UAP.L1.4a	UAP.L1.4b
L2	1	UAP.L2.1a	UAP.L2.1b
L2	2	UAP.L2.2a	UAP.L2.2b
L2	3	UAP.L2.3a	UAP.L2.3b
L2	4	UAP.L2.4a	UAP.L2.4b
L3	1	UAP.L3.1a	UAP.L3.1b
L3	2	UAP.L3.2a	UAP.L3.2b
L3	3	UAP.L3.2a	UAP.L3.2b
L3	4	UAP.L3.4a	UAP.L3.4b
L4	1	UAP.L4.1a	UAP.L4.1b
L4	2	UAP.L4.2a	UAP.L4.2b
L4	3	UAP.L4.3a	UAP.L4.3b
L4	4	UAP.L4.4a	UAP.L4.4b

WCS Slot	CAT Port	Primary UAP (Direct Connect)	Secondary UAP (AUX Port Connect)
L5	1	UAP.L5.1a	UAP.L5.1b
L5	2	UAP.L5.2a	UAP.L5.2b
L5	3	UAP.L5.3a	UAP.L5.3b
L5	4	UAP.L5.4a	UAP.L5.4b
L6	1	UAP.L6.1a	UAP.L6.1b
L6	2	UAP.L6.2a	UAP.L6.2b
L6	3	UAP.L6.3a	UAP.L6.3b
L6	4	UAP.L6.4a	UAP.L6.4b
L7	1	UAP.L7.1a	UAP.L7.1b
L7	2	UAP.L7.2a	UAP.L7.2b
L7	3	UAP.L7.2a	UAP.L7.2b
L7	4	UAP.L7.4a	UAP.L7.4b
L8	1	UAP.L8.1a	UAP.L8.1b
L8	2	UAP.L8.2a	UAP.L8.2b
L8	3	UAP.L8.3a	UAP.L8.3b
L8	4	UAP.L8.4a	UAP.L8.4b

UAPs with external antenna connectors are identified as **UAP-X** on the **Signal Distribution** page as shown in Figure 6-1.

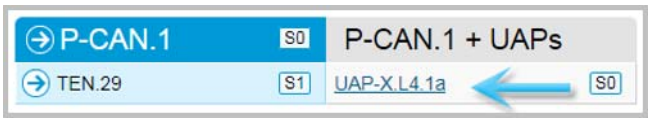

Figure 6-1. Identifying UAP-X Units in the ION-E Software

 © June 2017 CommScope, Inc.

UAPs and UAP-N25s

The UAP and UAP-N25 transmit and receive signals via Cat6A cabling between the CAN/TEN and an indoor antenna. The UAP also supports Ethernet backhaul or an additional UAP through a second RJ45 jack.

The UAP-N25 is similar to the UAP. UAPs support 380 to 2700 MHz in four 75-MHz blocks. The N25 has a filter that restricts the second receiver to 25 MHz. This allows ION-E to support certain band combinations in which a narrow receive band exists between two transmit bands.

The UAP and UAP-N25 are designed for indoor use only.

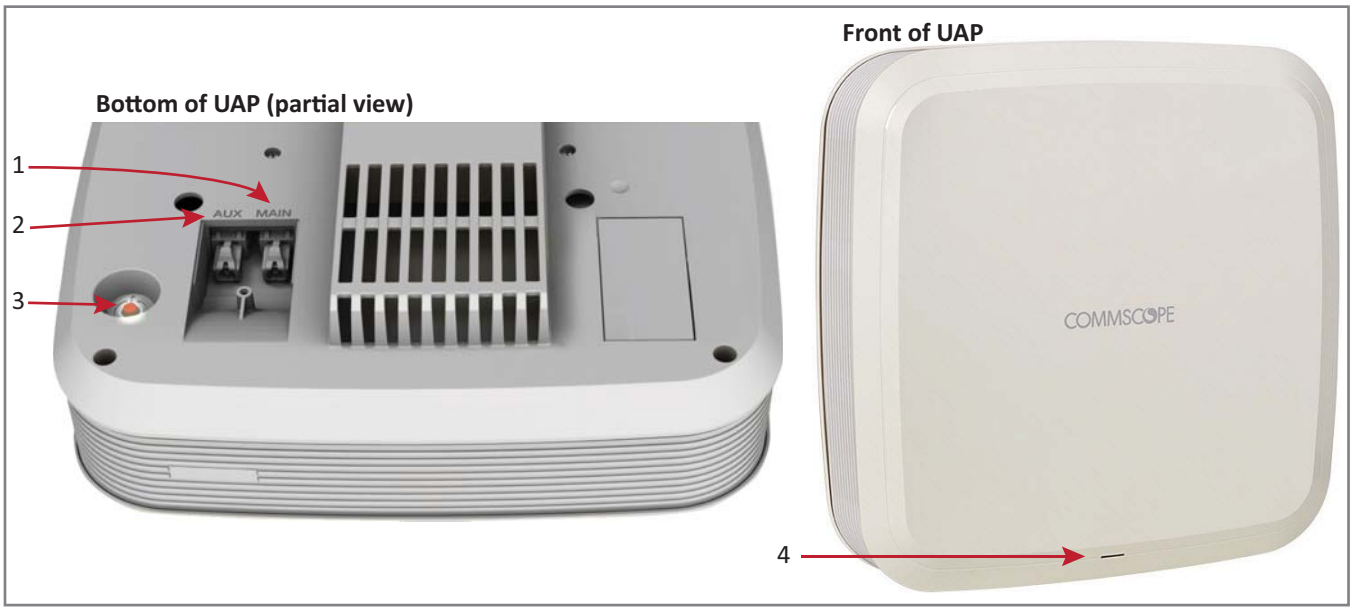

UAP Connectors			
Ref #	**Component**	**Device**	**Function**
1	Main port	RJ45 connector	Provides data and power to UAP over Cat6A.
2	AUX port	RJ45 connector	Provides data and power to 2nd UAP or Ethernet devices.
3	Power button	Pushbutton switch	Turns power to UAP on/off. Power to the UAP may also be shutdown via the ION-E Series Software. **CAUTION! Prior to disconnecting a Cat6A cable from the UAP, press the red Power button to power off the UAP.**

UAP Status LED (unlabeled)		
Ref #	**LED Color**	**Description**
4	• Blue	• UAP is transmitting as expected.
	• Fast-flash blue	• Unit Identifier activated in the ION-E GUI; for information on how to flash identify a UAP, see “Flash UAP Led” section of the ION-E Series software configuration guide that corresponds to the ION-E Software Release installed on this ION-E system.
	• Slow-flash blue	• UAP firmware update is in process.
	• Yellow	• Active alarm; see **Active Alarms** page in GUI.

UAP-X

The UAP-X is functionally identical to the UAP, but is designed to work with external antennas rather than the internal antennas used in the standard UAP.

The UAP-X is intended for indoor use only.

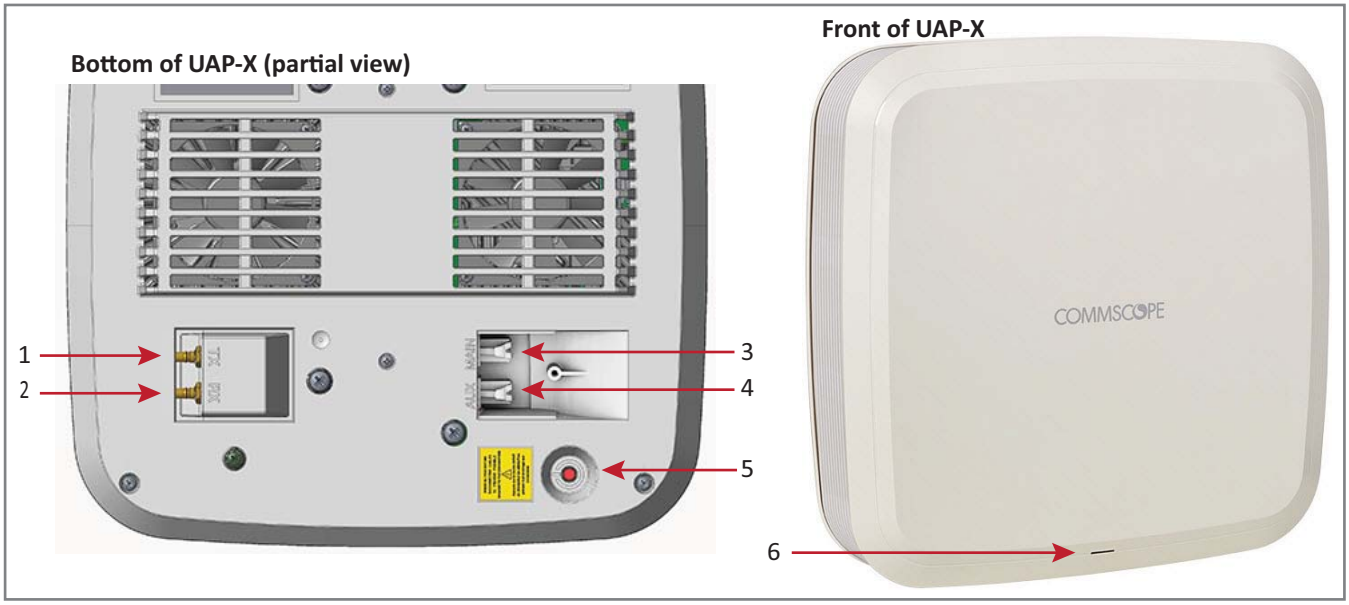

UAP-X Connectors			
Ref #	**Component**	**Device**	**Function**
1	TX port	Female QMA connector	Connects the UAP-X yo external antenna.
2	RX port		
3	Main port	RJ45 connector	Provides data and power to UAP over Cat6A.
4	AUX port	RJ45 connector	Provides data and power to 2nd UAP or Ethernet devices.
5	Power button	Pushbutton switch	Turns power to UAP on/off. Power to the UAP may also be shutdown via the ION-E Series Software. **CAUTION! Prior to disconnecting a Cat6A cable from the UAP-X, press the red Power button to power off the UAP-X.**

UAP-X Status LED (unlabeled)		
Ref #	**LED Color**	**Description**
6	• Blue	• UAP is transmitting as expected.
	• Fast-flash blue	• Unit Identifier activated in the ION-E GUI; for information on how to flash identify a UAP, see “Flash UAP Led” section of the ION-E Series software configuration guide that corresponds to the ION-E Software Release installed on the this ION-E system.
	• Slow-flash blue	• UAP firmware update is in process.
	• Yellow	• Active alarm; see **Active Alarms** page in GUI.

© June 2017 CommScope, Inc.

INSTALLING UAPS

The following sections describe the steps required to install a UAP.

Unless otherwise noted, the use of "UAP" in the Universal Access Point installation procedures collectively refers to the UAP, UAP-N25, and the UAP-X.

For information on how to install a CAP L, go to "Installing CAP Ls" on page 89.

Using the UAP Ceiling Mount Assembly (PN 7683182-00)

For information on mounting a UAP to a ceiling using the UAP Quick Release Ceiling Mount Kit, go to "Mounting a UAP Using a UAP Quick Release Ceiling Mount Kit" on page 57.

Required Tools for a Standard UAP Ceiling Mount

- #2 Phillips-Head screwdriver
- Cutting tool to cut open ceiling tile

Unpack and Inspect the Ceiling Mount Assembly

1. Inspect the exterior of the shipping container(s) for evidence of rough handling that may have damaged the components in the container.
2. Unpack each container while carefully checking the contents for damage and verify with the packing slip.

Table 6-2. *Components of the UAP Wall Mounting Kit (PN 7683182-00)*

Quantity	Component	Description
1		Template
1		UAP Shroud
2	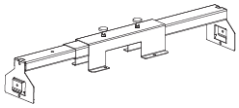	Two-Part Sliding Support Bars

3. If damage is found or parts are missing, file a claim with the commercial carrier and notify CommScope Technical Support (see "Contacting DCCS Global Technical Support" on page 126). Save the damaged cartons for inspection by the carrier.
4. Save all shipping containers for use if the equipment requires shipment at a future date.

Standard Ceiling Mount Overview

The UAP is equipped with a grounding stud located in the center of the unit, however, grounding is not required as UAPs are classified as low-voltage devices and do not have internal power supplies. CommScope recommends checking your local and national electrical codes to determine if grounding is a requirement.

Follow the guidelines shown in the following diagram when installing UAPs in the ceiling. Ceiling mount kits and wall mount kits are available.

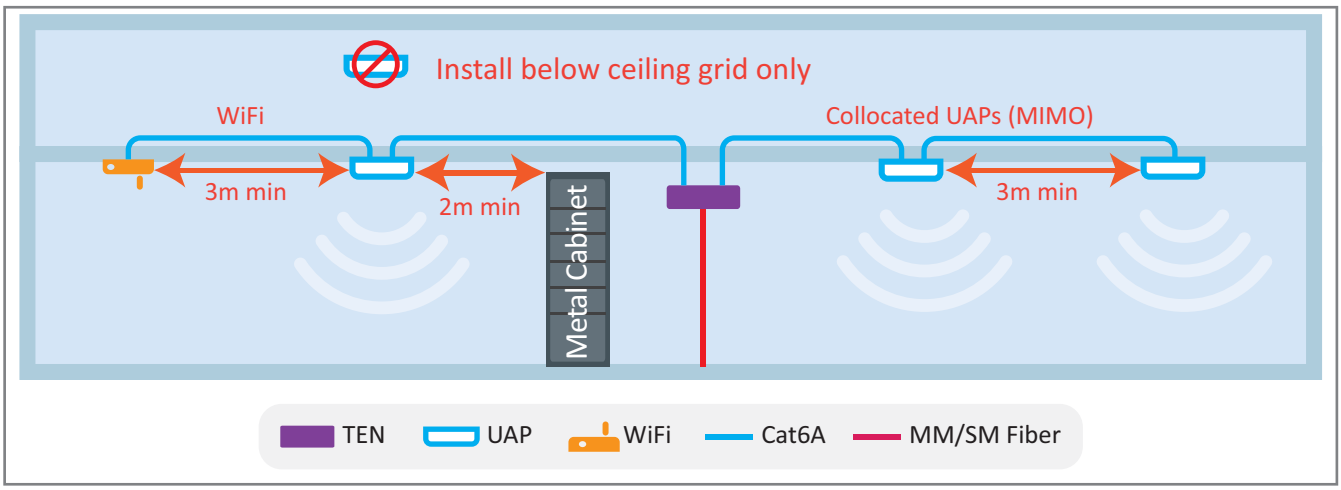

The UAP-X does not meet the UL2043 requirements for installation of powered equipment (without a fire enclosure) in air handling spaces. Installation of the UAP-X below the ceiling is recommended. If installation of the UAP-X above the ceiling is desired, it is the installer's responsibility to confirm that the installation complies with all local and national electrical, safety, and fire codes. In addition, if the UAP-X is mounted above the ceiling, the installer must ensure that sufficient space is maintained around the UAP-X for adequate cooling.

Care must be taken when positioning the antennas connected to the UAP-X to ensure sufficient isolation between the TX and RX antennas. If frequencies below 512 MHz are used, the Ethernet signals in the Cat6A cables may cause RX interference. If signals below 512 MHz are used, then the RX antenna should be placed more than 6 meters from the UAP-X or more than 2 meters from the units if steps are taken to mitigate interference from the Cat6A cables. Please see the UAP-X Antenna Installation Guidelines document for more details.

© June 2017 CommScope, Inc.

Standard Ceiling Mount Installation Steps

1. Using the supplied template as a guide, cut an opening in the center of a ceiling tile for the UAP.
2. Place the UAP on a flat surface such as a table with the top of the unit face down (connectors up).
3. Place the shroud over the top of the UAP so that the screw holes and cable cutouts align properly.
4. Place the ceiling tile over the shroud with the finished surface of the ceiling tile facing downward.
5. Place the two-part sliding support bar on top of the shroud and align it with the center of the UAP.
6. Place mounting bracket over the sliding support bar and align it with the threaded mounting holes in the UAP.

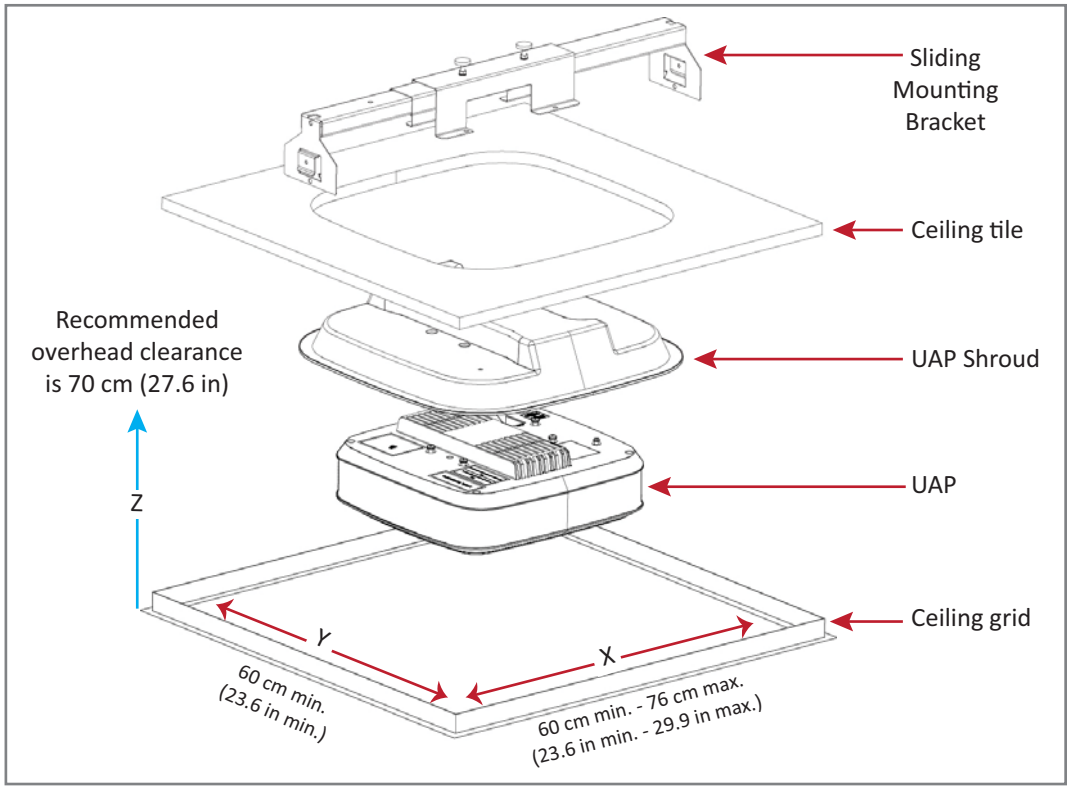

7 Insert and tighten the four M5X10 machine screws to secure the mounting bracket and shroud to the UAP.

8 If grounding is required, attach an appropriate ground wire to the UAP's green grounding screw.

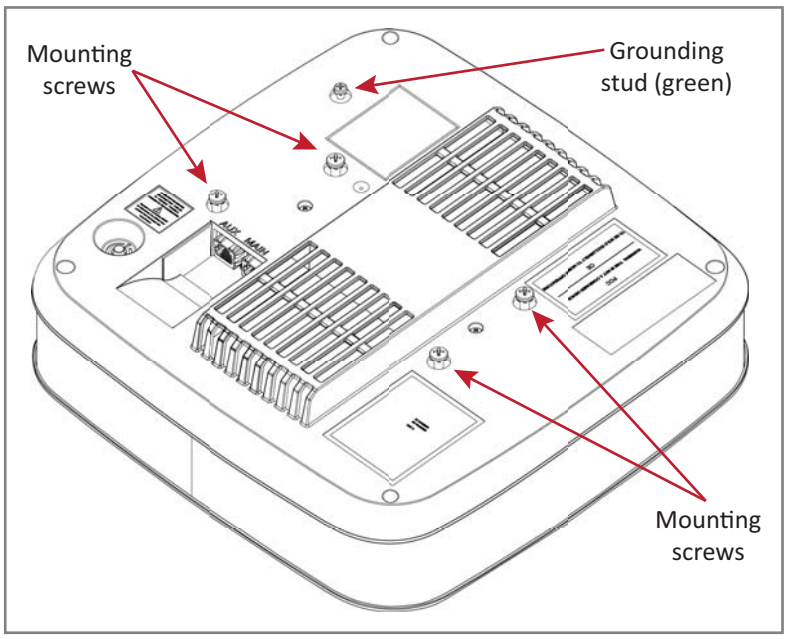

Grounding is not mandatory. UAPs are classified as low-voltage devices and do not have internal power supplies. However, CommScope recommends you check local and national electrical codes to determine if grounding is a requirement for the location in which you are installing the UAP.

9 Tighten the two mounting bracket thumbscrews, and then tighten the locking nuts to secure the thumbscrews.

10 Carefully place the mounted UAP into the ceiling grid and make sure that the support-bar clips are attached to the ceiling grid.

Always lift the UAP by the support bar or the face of the unit. Do not lift the UAP by holding the edge of the ceiling tile.

11 Connect the Cat6A cables to the Main and AUX ports of the UAP.

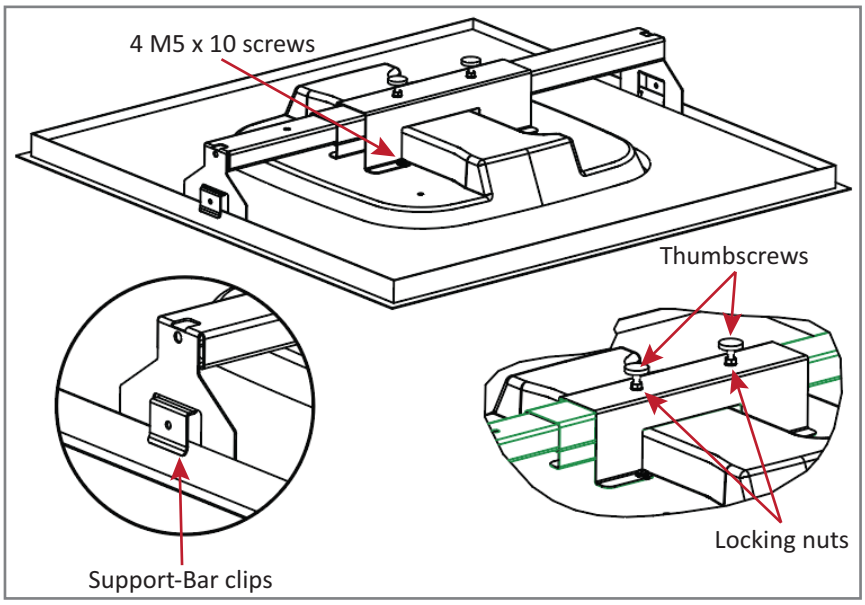

© June 2017 CommScope, Inc.

12 For safety, the installation of hanger wires to attach the UAP's Two-Part Sliding Support Bars to permanent ceiling structures is recommended.

Attach hanger wires, according to local building codes from the roof structure to the holes at ends of the UAP's Two-Part Sliding Support Bars, as shown below.

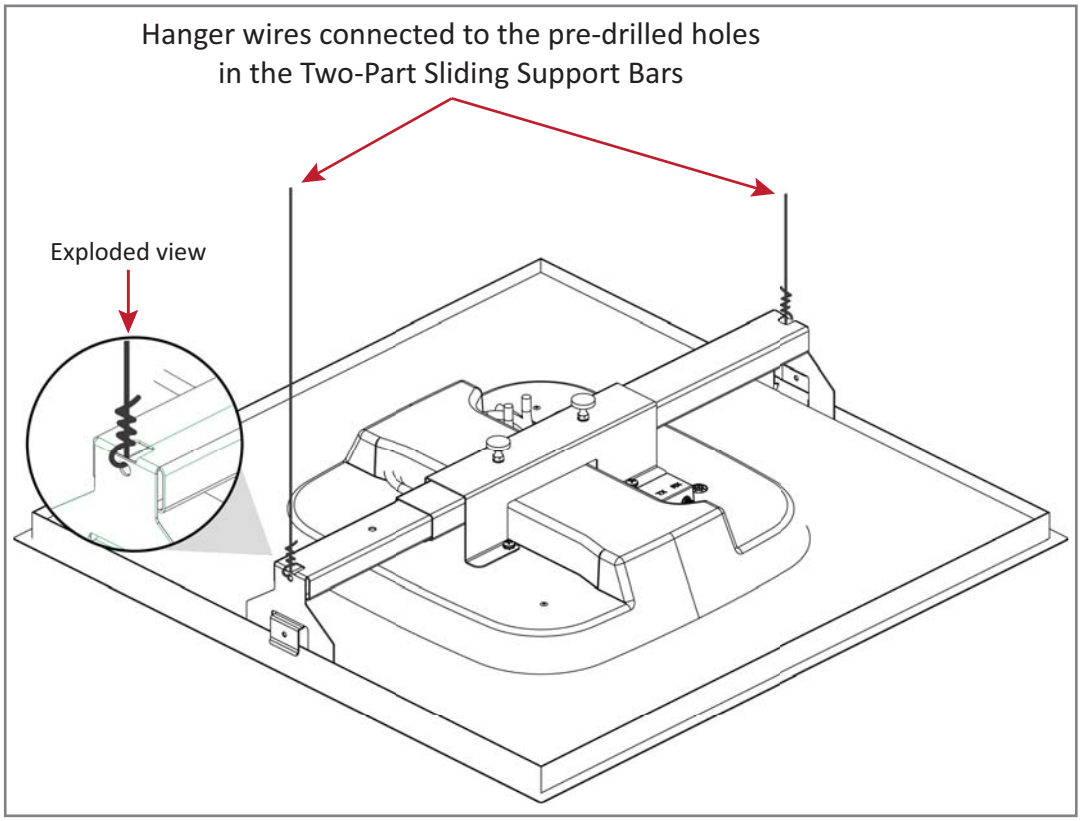

Mounting a UAP Using a UAP Quick Release Ceiling Mount Kit

UNRESOLVED: **What is the PN for this kit?**

For information on mounting a UAP to a ceiling using the standard UAP ceiling mount, go to "Using the UAP Ceiling Mount Assembly (PN 7683182-00)" on page 53.

The UAP quick release ceiling mount kit is designed to be installed in a standard 60 cm x 60 cm (2'x2') suspended ceiling grid. If the grid uses 120 cm x 60 cm (4'x2') ceiling tiles, add an additional cross-runner (cross-tee) to the main runner to support the unit. A minimum overhead clearance of 70 cm is recommended. UAP wall mounting kit 7683181-00 is also available from CommScope for mounting a UAP to a wall or hard ceiling.

Required Tools for a Quick Release Ceiling Mount Kit

- 8 mm metric torque wrench to secure the Guide-Lock pins and thumbscrew lock nuts
- Cutting tool to cut open ceiling tile

Unpack and Inspect the Quick Release Ceiling Mount Kit

1. Inspect the exterior of the shipping container(s) for evidence of rough handling that may have damaged the components in the container.
2. Unpack each container while carefully checking the contents for damage and verify with the packing slip.

Table 6-3. *Quick Release Ceiling Mount Kit (PN ???????-00)*

Quantity	Component	Description
1		Template
1 each		UAP Recess Shroud with Mounting Bracket

Quantity	Component	Description
1 each		Left and Right UAP Recess Bar
4		Guide Lock Pins

Overview of Using a Quick Release Ceiling Mount Kit

The UAP Quick Release Ceiling Mount kit is designed to be installed in a standard 60 cm x 60 cm (2' x 2') suspended ceiling grid. If the grid uses 120 cm x 60 cm (4' x 2') ceiling tiles, add an additional cross-runner (cross-tee) to the main runner to support the unit. A minimum overhead clearance of 70 cm is recommended, as shown below.

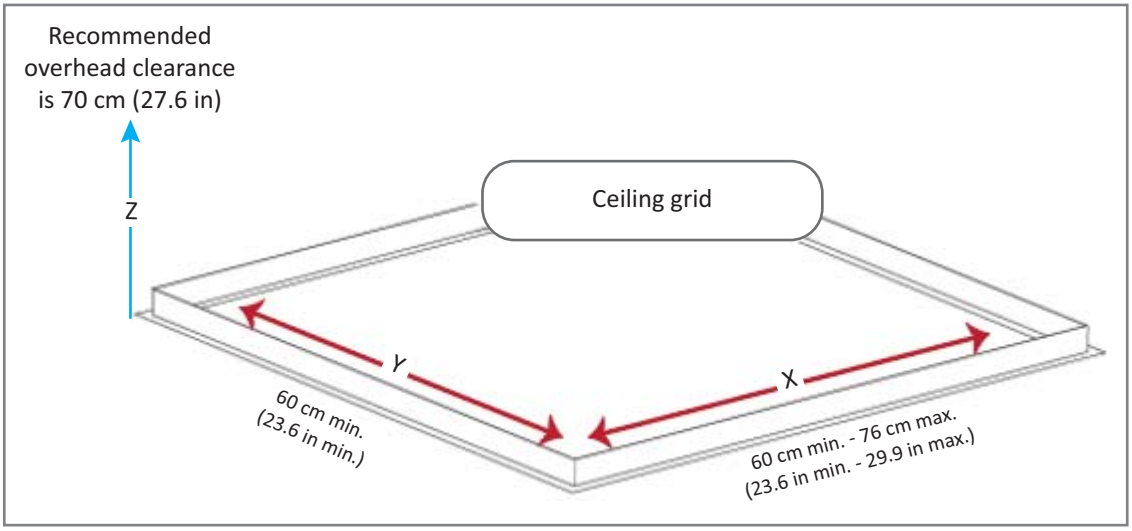

It is the responsibility of the installer to ensure that the UAP is safely installed.

© June 2017 CommScope, Inc.