Mount the UAP to the Ceiling

1 Using the supplied template as a guide, cut a 60 cm x 60 cm (2' x 2')opening for the UAP shroud in the center of a ceiling tile.

2 Place the UAP Recess Shroud with preassembled Mount Bracket face down on a flat surface such as a table.

3 Place the ceiling tile over the shroud with the finished surface of the ceiling tile facing downward.

4 Insert the Right Recess Bar into the Mounting Bracket, and then slide the Left Recess Bar into the Right Recess Bar.

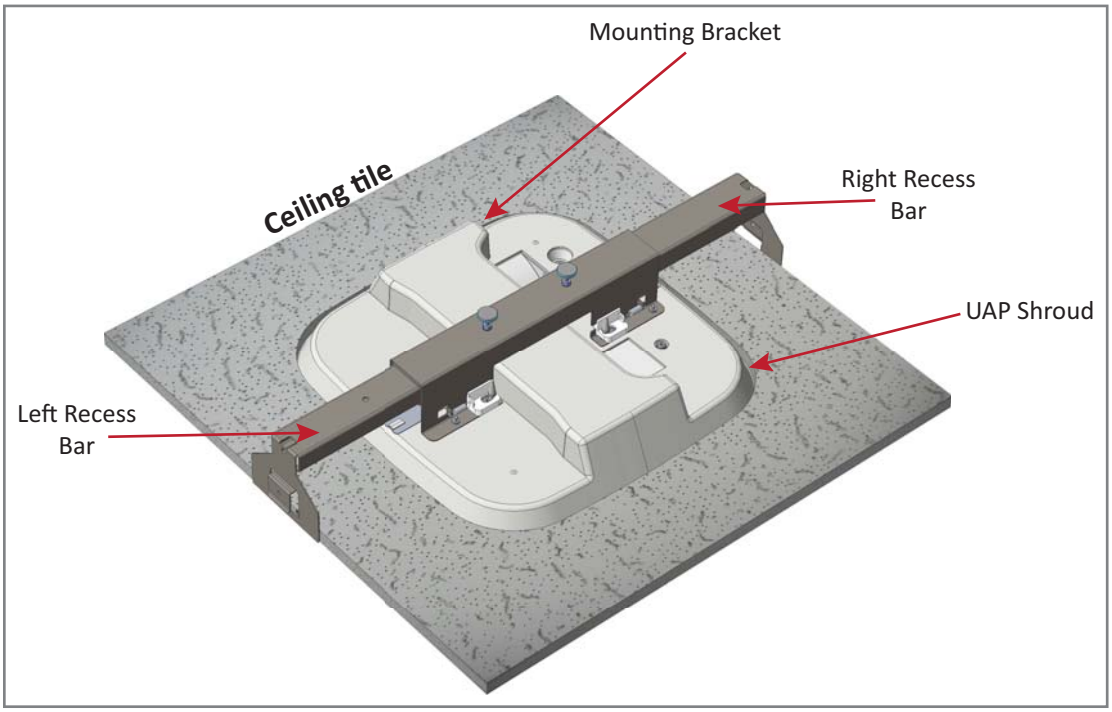

5 Carefully insert the assembled unit up through the opening in the ceiling grid at an angle, and then lower the unit into the ceiling grid.

6 Adjust the two-part recess bar by sliding it in or out as needed to the length required to align the recess bar clips with the ceiling grid.

© June 2017 CommScope, Inc.

7 Slide the support-bar clips onto the ceiling grid, and then snap them into place.

The mounting kit is designed to be supported by the ceiling grid—NOT the ceiling tile.

8 Use an 8 mm metric torque wrench to tighten the locking nuts to a torque of 4.5 N-m, and then tighten the two mounting bracket thumbscrews.

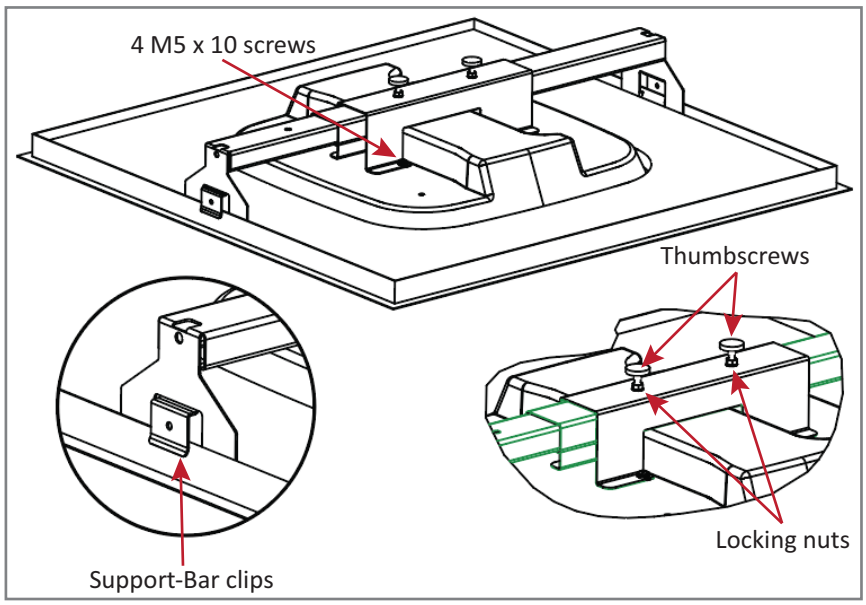

9 For safety, the installation of hanger wires to attach the UAP's Two-Part Sliding Support Bars to permanent ceiling structures is recommended.

Attach hanger wires, according to local building codes from the roof structure to the holes at ends of the UAP's Two-Part Sliding Support Bars, as shown below.

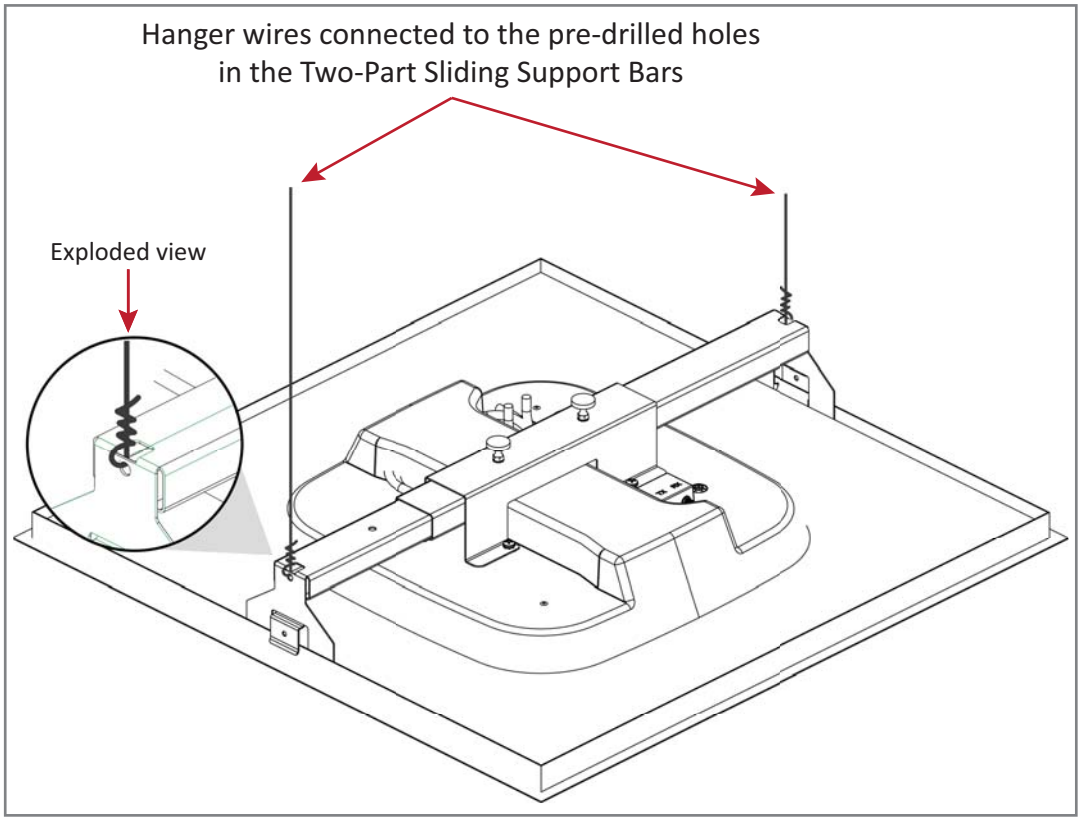

© June 2017 CommScope, Inc.

Connect the UAP Cables

10 Route the MAIN and AUX (if needed) Cat6A cables through the rectangular opening in the shroud (shown below), leaving approximately 46 cm (18") of cable to connect to the UAP. When viewing the shroud from the top, this opening is labeled as **MAIN**.

11 If grounding is required, insert an appropriate ground wire through the circular opening above the UAP grounding screw as shown leaving 46 cm (18") of extra ground wire to attach to the grounding screw.

Grounding is not mandatory. UAPs are classified as low-voltage devices and do not have internal power supplies. However, CommScope recommends you check local and national electrical codes to determine if grounding is a requirement for the location in which you are installing the UAP.

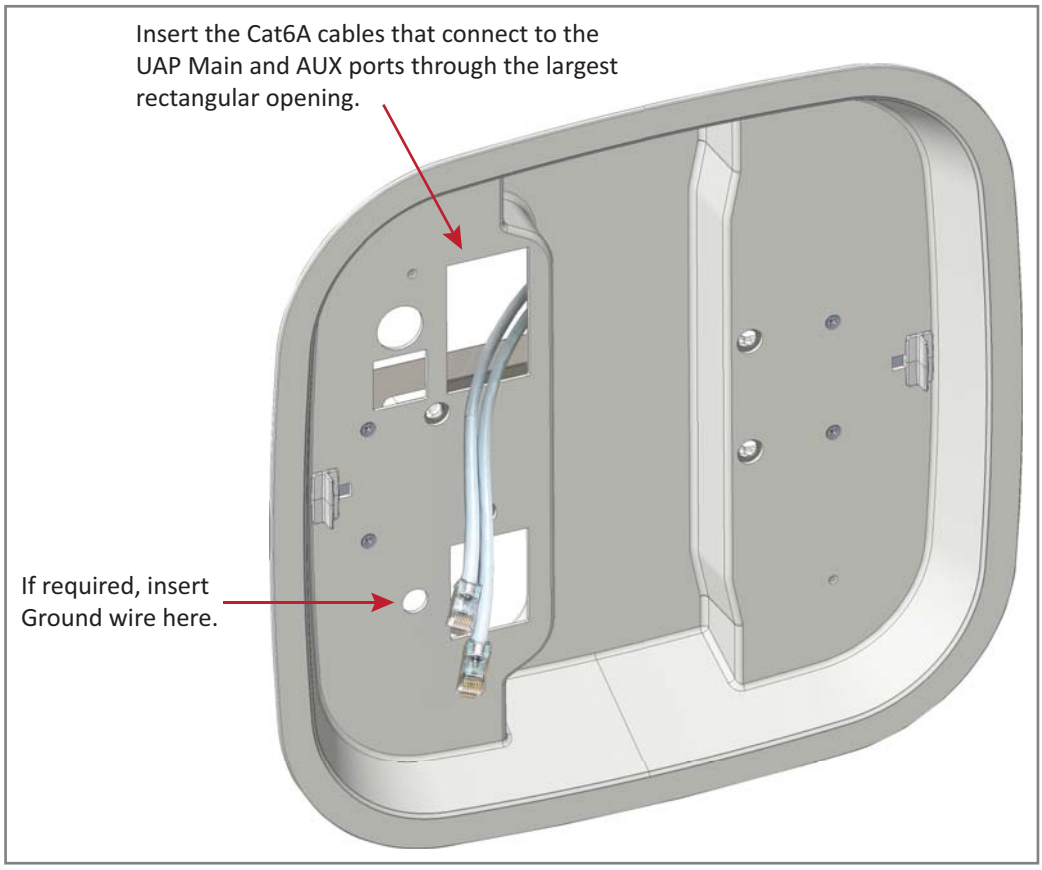

Install the UAP

12 Insert the four UAP Guide Lock Pins into the threaded holes in the top of the UAP as shown below, and then use an 8 mm metric torque wrench to tighten them to a torque of 2.7 N-m.

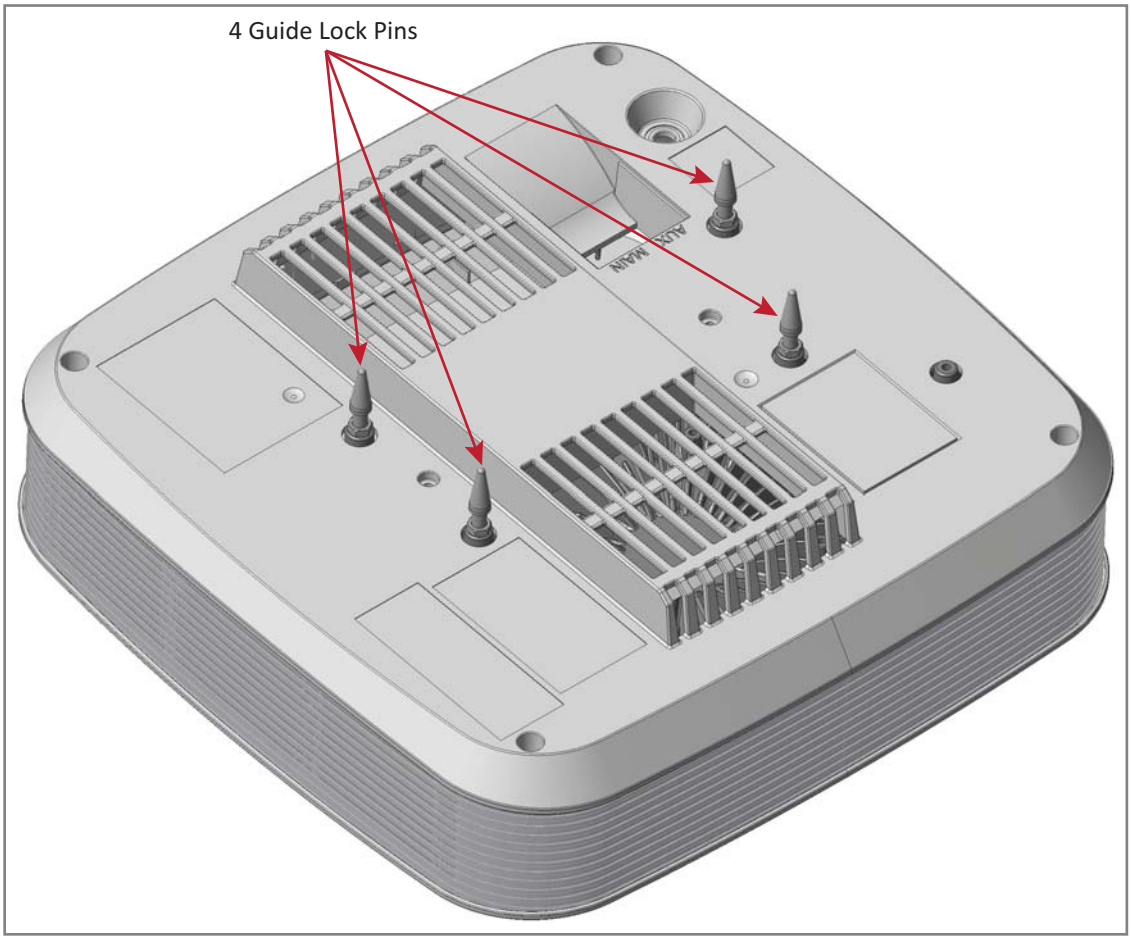

13 While holding the UAP below the shroud, connect the Cat6A cables to the MAIN and AUX RJ-45 ports of the UAP.

14 If required, attach the ground wire to the UAP's green grounding screw.

© June 2017 CommScope, Inc.

15 Align the Guide Lock Pins with the mating holes in the shroud and guide the cables back through the shroud as you press the UAP upward into the shroud—press the UAP up until the UAP release slides click into place, securing the UAP to the shroud. Make sure the UAP is securely locked into the shroud before letting go of the unit.

Mounting a UAP to a Wall Using the UAP Wall Mounting Kit (PN 7683181-00)

The following sections provide the steps required to wall mount a UAP using the UAP Wall Mounting Kit (PN 7683181-00).

Required Tools for a Wall Mount

- #2 Phillips-Head screwdriver
- Cutting tool to cut open ceiling tile

Unpack and Inspect the Wall Mounting Kit

1 Inspect the exterior of the shipping container(s) for evidence of rough handling that may have damaged the components in the container.

2 Unpack each container while carefully checking the contents for damage and verify with the packing slip.

Table 6-4. *Components of the UAP Wall Mounting Kit (PN ??)*

Quantity	Component	Description
1	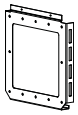	Wall Bracket

3 If damage is found or parts are missing, file a claim with the commercial carrier and notify CommScope Technical Support (see "Contacting DCCS Global Technical Support" on page 126). Save the damaged cartons for inspection by the carrier.

4 Save all shipping containers for use if the equipment requires shipment at a future date.

Mount the UAP to a Wall

1 Select the location to mount the UAP.

The Wall Bracket must be securely mounted to a wall capable of supporting the weight of the UAP (3.2 Kg).

2 Mount the Wall Bracket to a wall using appropriate fasteners. [**PN for the Wall Bracket?**]

3 The bracket MUST be mounted in the correct orientation with the top of the bracket facing upward (not on its side or upside down), as shown below.

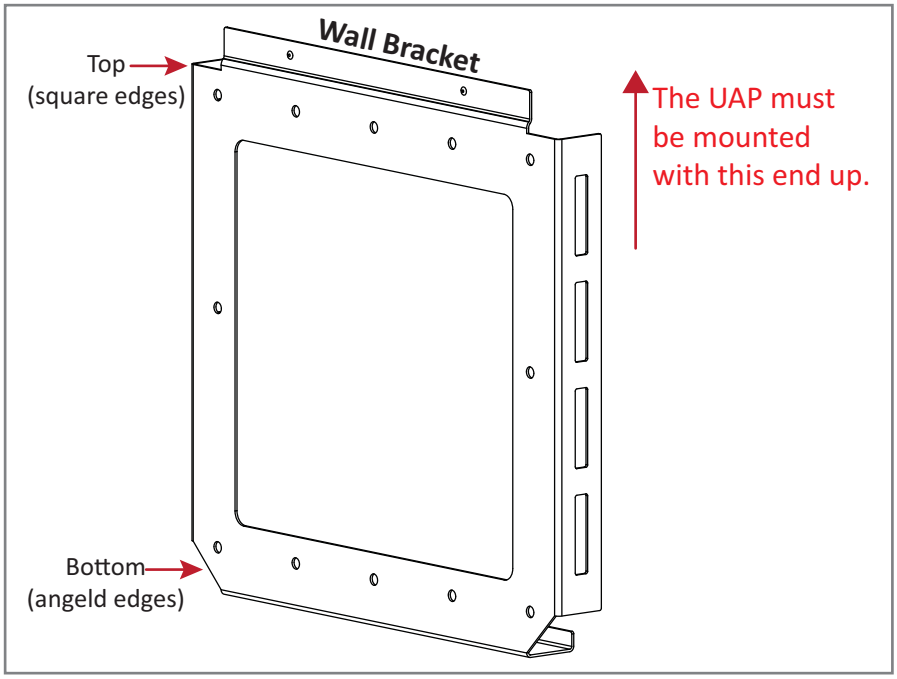

© June 2017 CommScope, Inc.

4 Remove the four M5X10 mounting screws located on the back of the UAP.

5 Place the UAP bracket over the UAP and insert and tighten the four M5X10 screws to secure the bracket to the UAP.

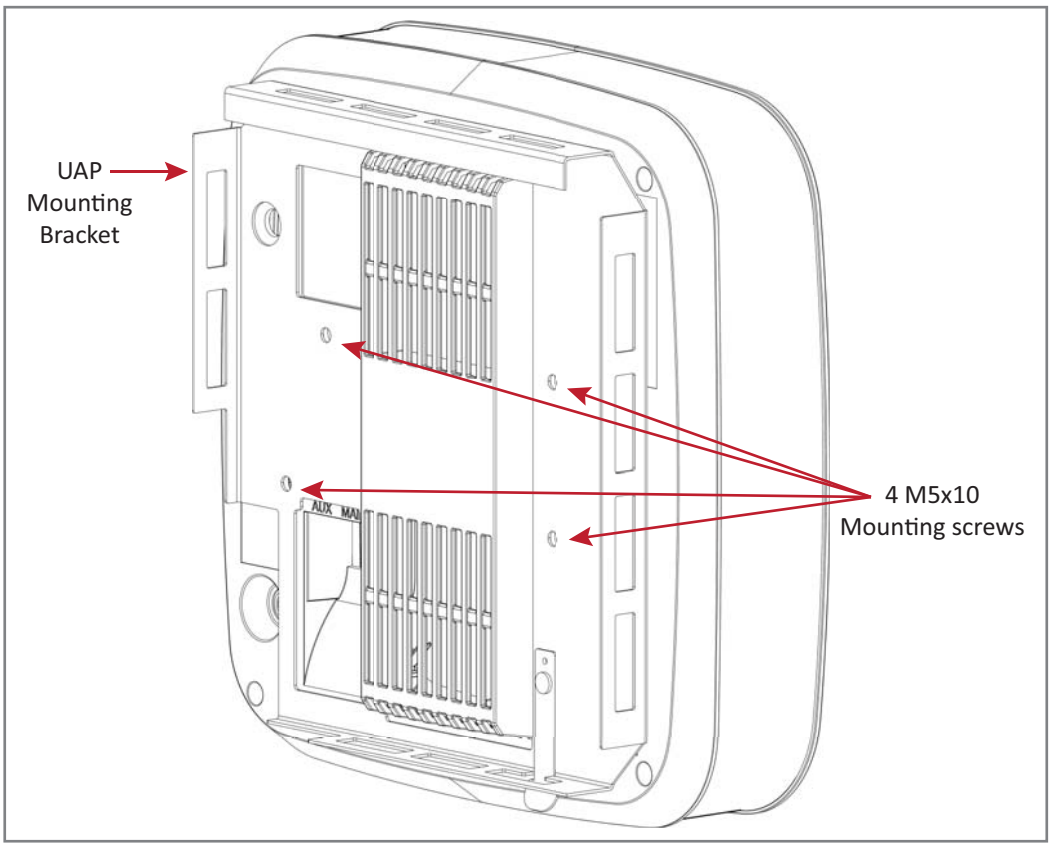

6 Connect Cat6A cables to UAP ports.

7 If grounding is required attach an appropriate ground wire to the green grounding screw of the UAP.

Grounding is not mandatory. UAPs are classified as low-voltage devices and do not have internal power supplies. However, CommScope recommends you check local and national electrical codes to determine if grounding is a requirement for the location in which you are installing the UAP.

8 Align the UAP bracket and wall bracket. The UAP with UAP bracket attached must be placed above the wall bracket as shown below.

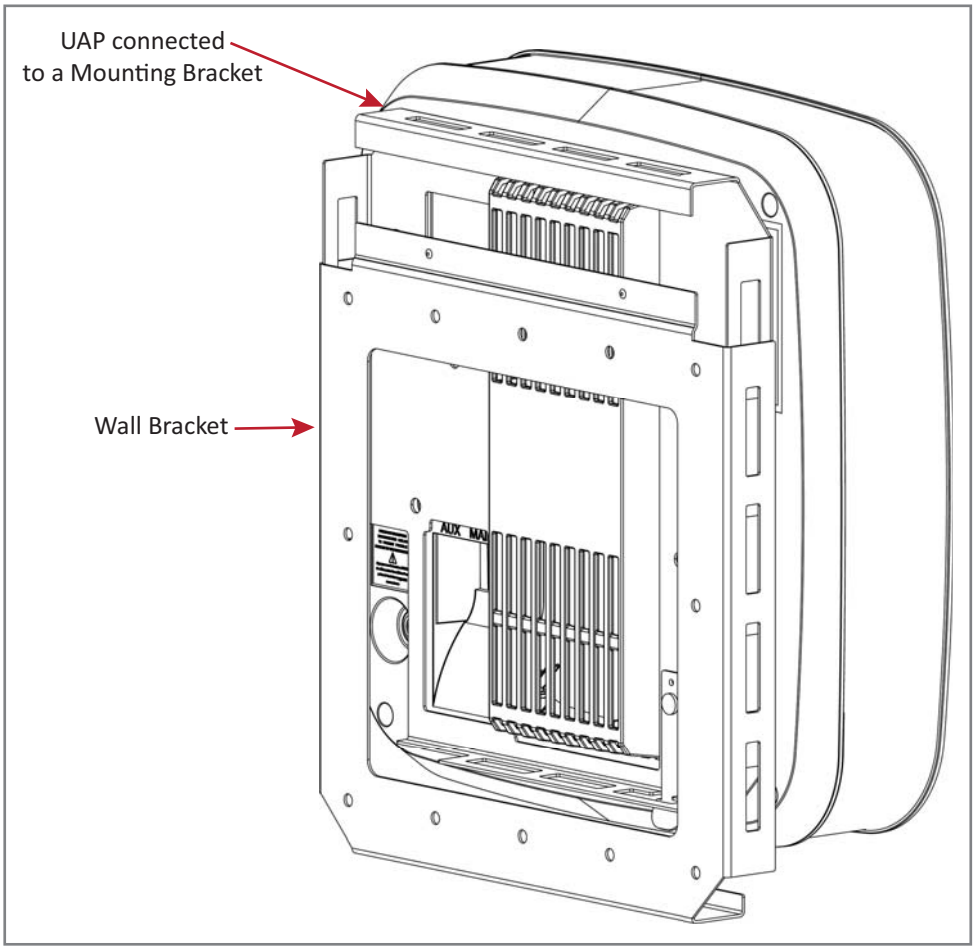

9 Slide the UAP downward until you hear it click and lock into place in the Wall Bracket.

To ensure that the UAP is securely and safely installed, the wall bracket must be mounted with the top of the bracket facing upward. Do not install the bracket on its side or facing downward.

© June 2017 CommScope, Inc.

UAP, UAP-N25, and UAP-X Cable Requirements

Cat6A cable is required for all connections between an CAT card and a UAP and for the jumpers between UAPs in cascade mode. The following cabling rules must be observed; see also Figure 6-2.

- Plenum rated cable must be used wherever it is required by local electrical codes.
- The minimum Cat6A cable wire size required for use with UAPs is 23 AWG (minimum EIA/TIA standards).
- 24 AWG is the minimum wire size allowed for short Cat6A patch cables or jumpers.
- The maximum CAT 6A cable length between a UAP and a CAN/TEN is 100 meters including all cables, jumpers, and patch panels.
- The maximum cable length to a cascaded UAP is also 100 meters, which includes the following:
  - the length of the Cat6A jumper between the primary UAP's AUX port and the cascaded (secondary) UAP's MAIN port
  - the cable length between the primary UAP and the CAN/TEN.

    For example, a 95m cable between a TEN and a primary UAP could be used with a 5m jumper cable between the primary and cascaded UAP.

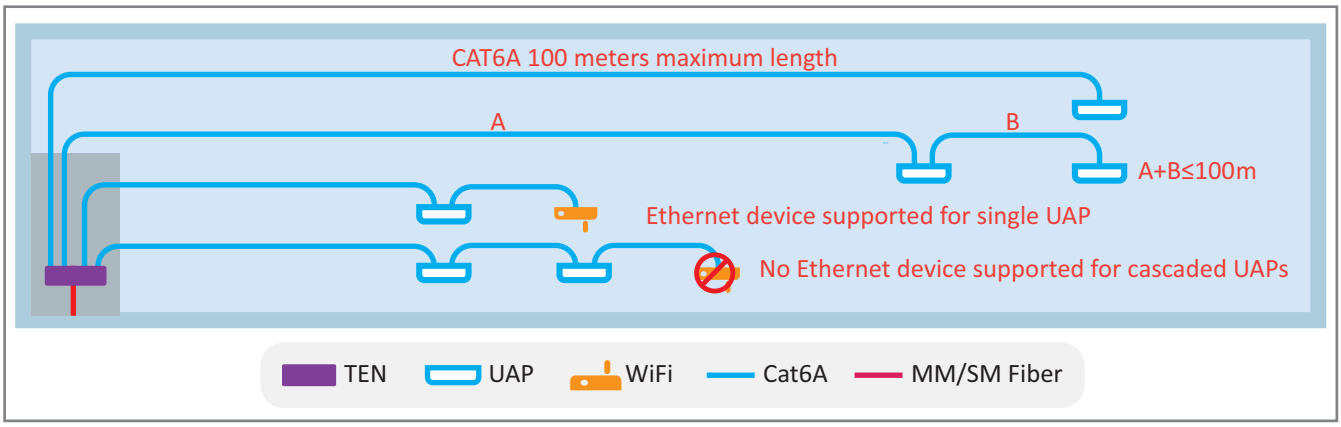

Figure 6-2. UAP, UAP-N25, and UAP-X Cabling Rules

Cascading a UAP, UAP-X, or UAP-N25

Two UAPs can be operated in cascade mode to provide LTE MIMO coverage or to support additional bands, as shown in Figure 6-3. To cascade UAPs, connect a CAT6A cable from the AUX port of the primary UAP (A) to the MAIN port of the secondary UAP (B). The AUX port of the secondary (B) UAP is not used in cascade mode.

It is also possible to use the combination of a UAP and UAP-X in cascade mode, however, all spacing and external antenna placement guidelines for UAP and UAP-X units still apply.

The connection of Ethernet devices, however, is not supported for cascaded UAPs.

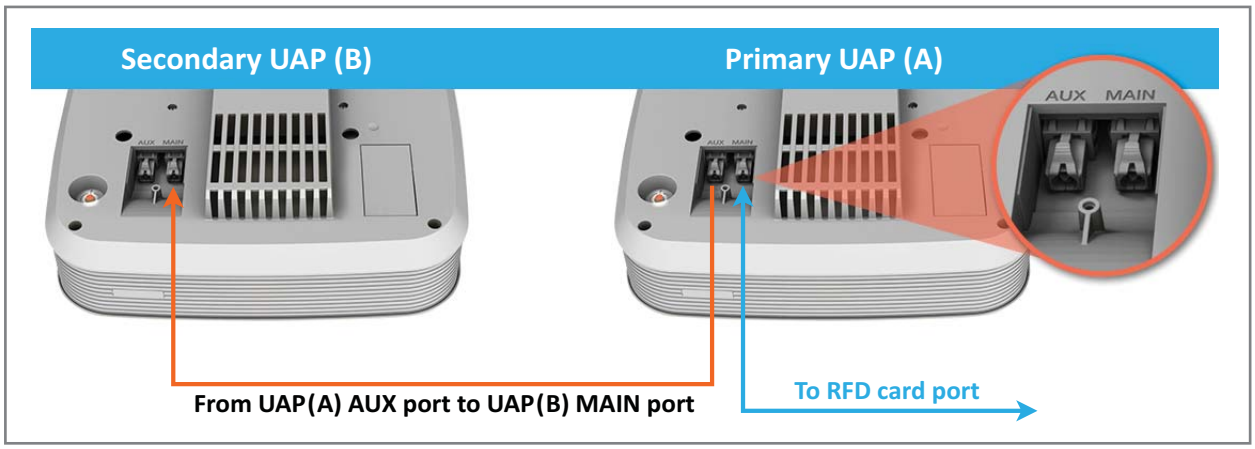

Figure 6-3. UAP Cascade Options

© June 2017 CommScope, Inc.

UAP Maintenance

The following sections tell you how to remove a UAP from mounting brackets, and provides preventative maintenance.

Remove a UAP from a Ceiling Mount

Should you need to remove the UAP from the ceiling mount, do the following:

1 While holding the UAP with both hands, press both UAP release slides inward towards the UAP.

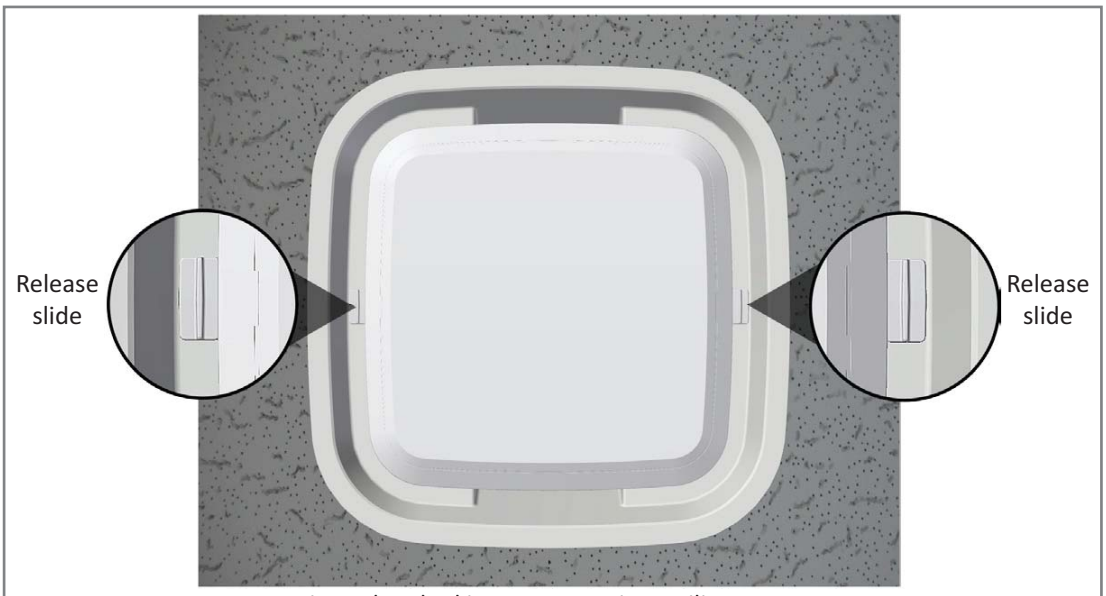

View when looking up at UAP in a ceiling mount

2 Press the red power switch button on the UAP to shut it down. The red button must be pressed BEFORE disconnecting the CAT6A cables. The blue LED will turn off when the unit shuts down. The UAP may also be shutdown via software prior to disconnecting the cables.

3 Unplug the MAIN and AUX Cat6A cables.

4 If a ground wire is installed, loosen the grounding screw and remove the ground wire.

Remove a UAP from a Wall Mount

Should you need to remove the UAP from the ceiling mount, do the following:

1 While securely supporting the UAP, press both UAP release inward towards the UAP.

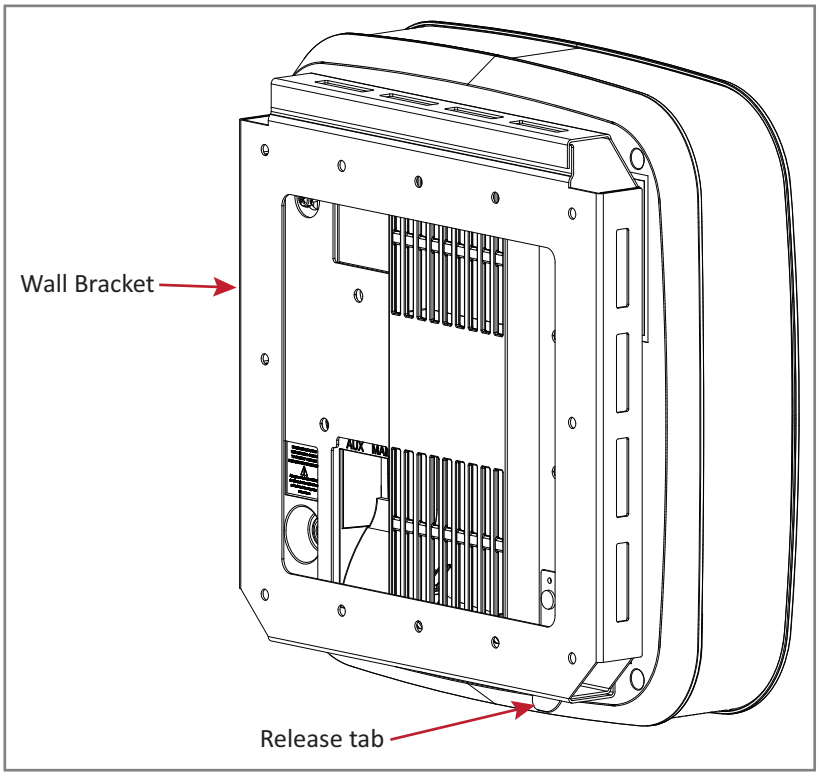

2 Press the red power switch button on the UAP to shut it down. The red button must be pressed BEFORE disconnecting the CAT6A cables. The blue LED will turn off when the unit shuts down. The UAP may also be shutdown via software prior to disconnecting the cables.

3 Unplug the MAIN and AUX Cat6A cables.

4 If a ground wire is installed, loosen the grounding screw and remove the ground wire.

© June 2017 CommScope, Inc.

Preventative UAP Maintenance

The UAP, UAP-N25, and UAP-X do not require preventative maintenance measures. However, checking the cleanliness of a unit and its components—particularly the heat sink/fans—at regularly-scheduled intervals is recommended. Avoid applying too much pressure when using a vacuum or other method, as this can damage the fan bearings and shorten the lifespan of the fans.

You will need to remove the UAP unit from its mounting to access the fans its bottom; see "Remove a UAP from a Ceiling Mount" on page 69.

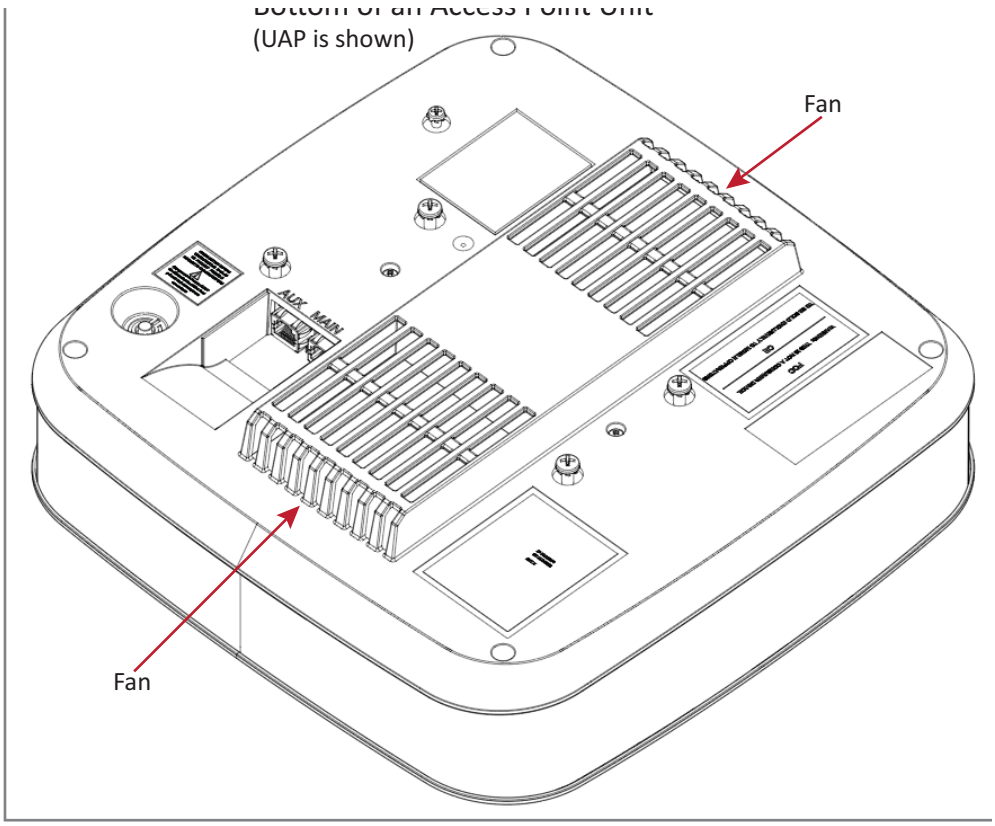

UAP Specifications

UAP Output Specifications

	UAP	UAP-X	UAP-N25
Nominal passband gain per band: Le gain nominal en bande passante	20 dB	20 dB	
Rated mean output power per band 380 MHz - 512 MHz La puissance moyenne de sortie par bande 380 MHz - 512 MHz	N/A	+8 dBm	
Rated mean output power per band >608 MHz La puissance moyenne de sortie par bande >608 MHz	+18 dBm	+18 dBm	+18 dBm
Maximum combined mean power in mid bands 608-1000 MHz Puissance moy-enne combinée maximale dans les bandes moyennes 608-1000 MHz	+21 dBm	+21 dBm	+21 dBm
Maximum combined mean power in high bands 1395-2700 MHz Puissance moy-enne combinée maximale dans les bandes moyennes 1395-2700 MHz	+21 dBm	+21 dBm	+21 dBm
Input / Output Impedance Les impédances d'entrée et de sortie, et	50 Ohms	50 Ohms	50 Ohms

The Manufacturer's rated output power for this equipment is the composite power in a band. For situations when multiple carrier signals are present, the power per carrier is reduced. For example, two carriers in a band will each have 3 dB less power than a single carrier in a band. This is important where the output signal is radiated and can cause interference to adjacent band users. This power reduction is to be by means of gain reduction and not by an attenuator at the output of the device.

La puissance de sortie nominale du fabricant pour cet équipement est la puissance composite dans une bande. Pour les situations où plusieurs porteuses sont présentes, la puissance par porteuse est réduite. Par exemple, deux porteuses d'une bande auront chacun 3 dB de puissance inférieure à celle d'une seule porteuse dans une bande. Ceci est important lorsque le signal de sortie est rayonné et peut causer des interférences aux utilisateurs de bandes adjacentes. Cette réduction de puissance doit être réalisée par réduction de gain et non par un atténuateur en sortie du dispositif.

© June 2017 CommScope, Inc.

UAP Bandwidth Specifications

ION-E supports a variety of bands in the 380 to 2700 MHz range. The frequencies and bandwidths listed in the following table, for example, represent the nominal bandwidth specifications for Canada in the North America region.

MHz	MHz	Nominal bandwidth (MHz) La largeur de bande nominale
406.1*	430*	24
450*	470*	20
728	746	18
746	756	10
768	776	8
851	869	18
869	894	25
1930	1995	65
2110	2155	45
2620	2690	70

* UAP-X, which uses external antennas, is required to support frequencies below 608 MHz due to the UAP's internal antenna limitations at lower frequencies.

© June 2017 CommScope, Inc.

© June 2017 CommScope, Inc.

7

CARRIER ACCESS POINT, LOW POWER (CAP L)

Chapter Topics **Page**

Identifying CAP Ls in the ION-E Software 76
CAP L Overview 77
CAP L Connectors, Ports, and LEDs 78
CAP L with an Optical Fiber Interface 79
CAP L with a Copper Interface and External DC Power 80
CAP L with a Copper Interface and Power Cat 6A Cable 81
Fan Interface Port 82
Powering a CAP L 82
CAP L Accessory Options 83
Fan Kit (PN 7724090-00) 84
CAP L Flat Mounting Bracket Kit (PN 7774353-00) 85
CAP L Power Supply / Hybrid Fiber Mounting Kit (PN 7774354-00) 86
CAP L 240W AC/DC Power Supply Kit (PN 7775087-00) 87
CAP OCTIS Kits (PNs 7773582-00 and 7760652-00) 88
Installing CAP Ls 89
Prepare for Installation 89
Recommended Tools 89
Recommended Materials 89
Determine the Power Consumption of the CAP L 90
Determine the CAP L Mounting Site 90
Mounting Orientation 93
Mounting Cautions 95
General Installation Safety Requirements 95
Guard Against Damage from Electro-Static Discharge 95
Unpack and Inspect the CAP L and Optional Accessories 96
Installing a CAP L 96
Mount the CAP L 96
Flat-Surface Mount a CAP L 97
Wall Mount a CAP L Using a Flat Mounting Bracket Kit (PN 7774353-00) 97
Wall Mount a CAP L Using a Power Supply / Hybrid Fiber Mounting Kit (PN 7774354-00) 100
Wall Mount a CAP L Using a 240W AC/DC Power Supply Kit (PN 7775087-00) 106
Ceiling Mount a CAP L 109
(Optional) Ground the CAP L 110
Connect the CAP L Cables 111
Cable a CAP L with an Optical Fiber Interface 111
Cable a CAP L with a Copper Interface and Power over Category 6A Cable 114
Cable a CAP L with a Copper Interface and Power over Ethernet 116
Cascading CAP Ls 118
CAP L Maintenance 119
Remove a CAP L from a Ceiling Mount 119
Remove a CAP L from a Wall Mount 120
Preventative CAP L Maintenance 121
CAP L Specifications 122
CAP L Output Specifications 122
CAP L Bandwidth Specifications 123

This chapter provides a product overview and installation instructions for the ION-E Series Carrier Access Point, Low Power (CAP L) that can be deployed in an ION-E system. CAP Ls allow transmission between the ION-E equipment and antennas and Ethernet devices (such as WiFi and IP cameras).

For information on Universal Access Points (UAPS), go to "Universal Access Points" on page 49.

© June 2017 CommScope, Inc.

IDENTIFYING CAP LS IN THE ION-E SOFTWARE

CAP L numbering is based on the CAT cards slot and port numbers in the associated CAN or TEN and whether the CAP L is directly connected to the CAT card (a) or connected to the AUX port of another UAP (b).

The ION-E GUI labels CAP Ls as follows:

OAP.<Slot ID>.<Port#><a or b>

Where

- **OAP** identifies that the Access Point is a CAP L
- **<Slot ID>** is the WCS-2 or WCS-4 Subrack slot (L1 to L8), shown as a alpha-numerical integer from **L1** - **L8**
- **<Port #>** is the CAT Card Port number (1 - 4), shown as a numerical integer from **1** - **4**
- **<a or b>** is whether the CAP L is the main/primary CAP L (**a**) or the cascaded/secondary CAP L (**b**).

Table 7-1. *UAP Identification in the ION-E Software*

WCS Slot	CAT Port	Primary CAP L (Direct Connect)	Secondary CAP L (AUX Port Connect)
L1	1	OAP.L1.1a	OAP.L1.1b
L1	2	OAP.L1.2a	OAP.L1.2b
L1	3	OAP.L1.3a	OAP.L1.3b
L1	4	OAP.L1.4a	OAP.L1.4b
L2	1	OAP.L2.1a	OAP.L2.1b
L2	2	OAP.L2.2a	OAP.L2.2b
L2	3	OAP.L2.3a	OAP.L2.3b
L2	4	OAP.L2.4a	OAP.L2.4b
L3	1	OAP.L3.1a	OAP.L3.1b
L3	2	OAP.L3.2a	OAP.L3.2b
L3	3	OAP.L3.2a	OAP.L3.2b
L3	4	OAP.L3.4a	OAP.L3.4b
L4	1	OAP.L4.1a	OAP.L4.1b
L4	2	OAP.L4.2a	OAP.L4.2b
L4	3	OAP.L4.3a	OAP.L4.3b
L4	4	OAP.L4.4a	OAP.L4.4b

WCS Slot	CAT Port	Primary CAP L (Direct Connect)	Secondary CAP L (AUX Port Connect)
L5	1	OAP.L5.1a	OAP.L5.1b
L5	2	OAP.L5.2a	OAP.L5.2b
L5	3	OAP.L5.3a	OAP.L5.3b
L5	4	OAP.L5.4a	OAP.L5.4b
L6	1	OAP.L6.1a	OAP.L6.1b
L6	2	OAP.L6.2a	OAP.L6.2b
L6	3	OAP.L6.3a	OAP.L6.3b
L6	4	OAP.L6.4a	OAP.L6.4b
L7	1	OAP.L7.1a	OAP.L7.1b
L7	2	OAP.L7.2a	OAP.L7.2b
L7	3	OAP.L7.2a	OAP.L7.2b
L7	4	OAP.L7.4a	OAP.L7.4b
L8	1	OAP.L8.1a	OAP.L8.1b
L8	2	OAP.L8.2a	OAP.L8.2b
L8	3	OAP.L8.3a	OAP.L8.3b
L8	4	OAP.L8.4a	OAP.L8.4b

© June 2017 CommScope, Inc.

CAP L Overview

The CommScope ION-E Carrier Access Point, Low Power (CAP L) provides data and power through Copper, Single-Mode Fiber (SMF), or Multi-Mode Fiber (MMF). In addition to transmitting wireless data over a common cable, the CAP L also supports Gigabit Ethernet for WiFi, IP cameras.

The CAP L interfaces with the ION-E CAN/TEN via a CAT 6A cable, or via an optical link. On the downlink, the CAP L converts some or all of the data arriving at the CAP L to analog signals and sends them to the Antenna ports. On the uplink, received signals are digitized and serialized into data streams, which are sent back to the CAN. Each CAP L can provide RF coverage for up to four specific frequency bands.

The CAP L

- is passively cooled with a temperature range of -33°C to +40°C (-27.4°F to 104°F); see also "Fan Kit (PN 7724090-00)" on page 84
- is outdoor rated (IP67)
- has a typical power consumption of 98W; see also "Fan Kit (PN 7724090-00)" on page 84

Table 7-2 lists the CAP L models that this installation guide supports.

Table 7-2. *CAP L Models and RF Variations*

Part Number	Model Name	Frequency Bands	Supported Remotes	Interface Type	Power Option Available	Fan Kit
7770203-0001	CAP L 17E/17E/23/23 C-PE-F1	AWS1700 / LTE2300	17E/23 MIMO	Copper	Power over Cat6A	Yes
7770203-0002	CAP L 17E/17E/23/23 C-DC-F1	AWS1700 / LTE2300	17E/23 MIMO	Copper	External DC	Yes
7770203-0003	CAP L 17E/17E/23/23 F-DC-F1	AWS1700 / LTE2300	17E/23 MIMO	Optical	External DC	Yes
7770203-0004	CAP L 17E/17E/23/23 C-PE	AWS1700 / LTE2300	17E/23 MIMO	Copper	Power over Cat6A	No
7770203-0005	CAP L 17E/17E/23/23 C-DC	AWS1700 / LTE2300	17E/23 MIMO	Copper	External DC	No
7770203-0006	CAP L 17E/17E/23/23 F-DC	AWS1700 / LTE2300	17E/23 MIMO	Optical	External DC	No
7770209-0001	CAP L 18/21/26/26 C-PE-F1	GSM1800 / UMTS2100 / LTE2600	18/21/26/26	Copper	Power over Cat6A	Yes
7770209-0002	CAP L 18/21/26/26 C-DC-F1	GSM1800 / UMTS2100 / LTE2600	18/21/26/26	Copper	External DC	Yes
7770209-0003	CAP L 18/21/26/26 F-DC-F1	GSM1800 / UMTS2100 / LTE2600	18/21/26/26	Optical	External DC	Yes
7770209-0004	CAP L 18/21/26/26 C-PE	GSM1800 / UMTS2100 / LTE2600	18/21/26/26	Copper	Power over Cat6A	No
7770209-0005	CAP L 18/21/26/26 C-DC	GSM1800 / UMTS2100 / LTE2600	18/21/26/26	Copper	External DC	No
7770209-0006	CAP L 18/21/26/26 F-DC	GSM1800 / UMTS2100 / LTE2600	18/21/26/26	Optical	External DC	No
7770356-0001	CAP L 17E/17E/19/19 C-PE-F1	AWS1700 / PCS1900	17E/19 MIMO	Copper	Power over Cat6A	Yes
7770356-0002	CAP L 17E/17E/19/19 C-DC-F1	AWS1700 / PCS1900	17E/19 MIMO	Copper	External DC	Yes
7770356-0003	CAP L 17E/17E/19/19 F-DC-F1	AWS1700 / PCS1900	17E/19 MIMO	Optical	External DC	Yes
7770356-0004	CAP L 17E/17E/19/19 C-PE	AWS1700 / PCS1900	17E/19 MIMO	Copper	Power over Cat6A	No
7770356-0005	CAP L 17E/17E/19/19 C-DC	AWS1700 / PCS1900	17E/19 MIMO	Copper	External DC	No
7770356-0006	CAP L 17E/17E/19/19 F-DC	AWS1700 / PCS1900	17E/19 MIMO	Optical	External DC	No

© June 2017 CommScope, Inc.

CAP L Connectors, Ports, and LEDs

The following sections identify the connectors, ports, and LEDs available on the different CAP L models:

- "CAP L with an Optical Fiber Interface" on page 79
- "CAP L with a Copper Interface and External DC Power" on page 80
- "CAP L with a Copper Interface and Power Cat 6A Cable" on page 81.

© June 2017 CommScope, Inc.

CAP L with an Optical Fiber Interface

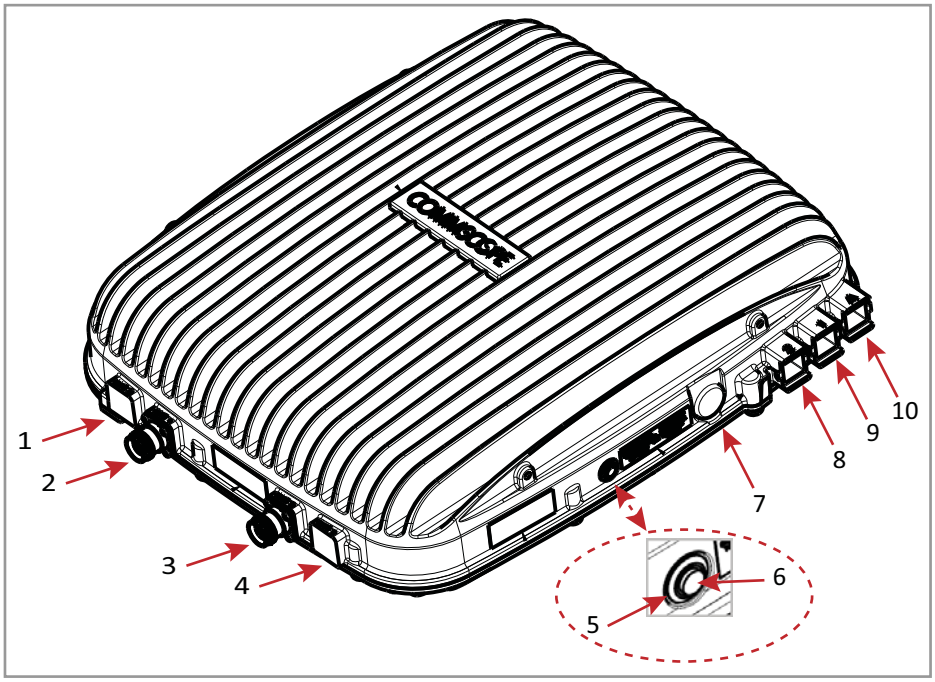

Connectors			
REF #	**Label**	**Description**	**Function**
1, 4	ANT 3, ANT 4	Not available; connector is plugged.	
2	ANT 1	4.3-10 RF connector	RF connectors that connect to two separate external antennas or to two ports on a cross-polarized dual antenna via 50Ω coaxial cable. Each connector supports two RF bands as described in Table 7-2 on page 77. The end of the 50Ω coaxial cable that connects to an ANT connector can be either a push-pull or a threaded connector. If not used, an ANT connector must be plugged.
3	ANT 2		
6	Unlabeled	Pushbutton switch	Turns power to CAP L on/off. Power to the CAP L may also be shutdown via the ION-E Series Software. [**verify can power off via GUI**] **CAUTION! Prior to disconnecting the Power cable from the CAP L, press the Power button to power off the CAP L.**
7	Unlabeled	36 to 60 Vdc Power connector	Proprietary 4-pin connector that connects to a local or remote DC power supply, or to a Hybrid Fiber Junction Box.
8	2	Optical Port 2	Optical Port 2 connects to an optional cascaded CAP L unit and provides the main signal interface. Optical transport occurs over Single Mode Fiber (SMF) or Multi Mode Fiber (MMF). This port must be plugged if not in use.
9	1	Optical Port 1	Optical Port 1 connects to an ION-E CAN/TEN (possibly through a local Hybrid Fiber Junction Box) and provides the main signal interface. Optical transport occurs over Single Mode Fiber (SMF) or Multi Mode Fiber (MMF); the appropriate SFP+ is factory-installed according to order specifications.
10	A	Auxiliary port	The AUX port provides a connection for external Ethernet devices such as WiFi and IP cameras. Cabling is via the appropriate CAT cable for the protocol; this model supports an 1000 BASE-T and 802.3at Class 3 Power over Cat6A Ethernet connection. Maximum attached cable length is 3 meters (9.8 feet). The AUX port must be plugged if not in use.

Power LED (unlabeled)		
Ref #	**LED Color**	**Description**
5	• Blue	• CAP L is powered on and operational.
	• Flashing blue	• CAP L is powered on and initializing.
	• Off	• CAP L is not powered on.
	For further information, see "Powering a CAP L" on page 82.	

CAP L with a Copper Interface and External DC Power

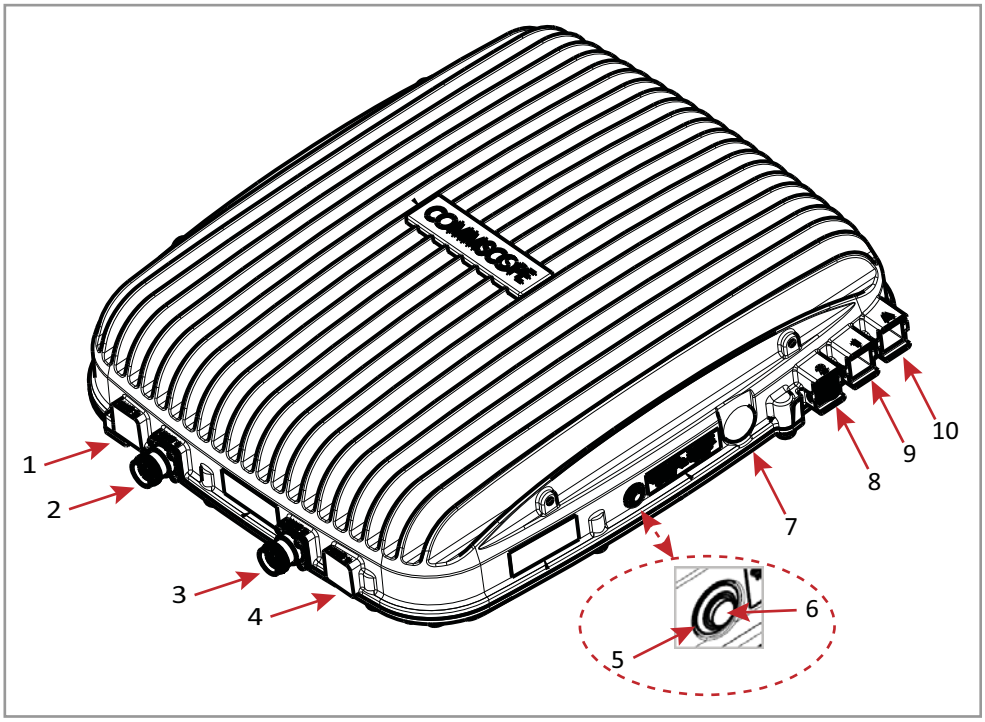

Connectors			
REF #	**Label**	**Description**	**Function**
1, 4	ANT 3, ANT 4	Not available; connector is plugged.	
2	ANT 1	4.3-10 RF connector	RF connectors that connect to two separate external antennas or to two ports on a cross-polarized dual antenna via 50Ω coaxial cable. Each connector supports two RF bands as described in Table 7-2 on page 77. The end of the 50Ω coaxial cable that connects to an ANT connector can be either a push-pull or a threaded connector. If not used, an ANT connector must be plugged.
3	ANT 2		
6	Unlabeled	Pushbutton switch	Turns power to CAP L on/off. Power to the CAP L may also be shutdown via the ION-E Series Software. [**verify can power off via GUI**] **CAUTION! Prior to disconnecting the Power cable from the CAP L, press the Power button to power off the CAP L.**
7	Unlabeled	36 to 60 Vdc Power connector	Connects to local or remote power.
8	2	Port 2	Plugged, not applicable to this model configuration.
9	1	Port 1	Port 1 connects to an ION-E CAN/TEN via CAT 6A cable and provides the main signal interface.
10	A	RJ-45 connector	The AUX port provides a cascade connection to an optional locally powered cascaded CAP L, or provides a connection to external Ethernet devices such as WiFi and IP cameras. Cabling is via the appropriate CAT cable for the protocol; this model supports an 1000 BASE-T and 802.3at Class 3 Power over Cat6A Ethernet connection. Maximum attached cable length is 3 meters (9.8 feet). The AUX port must be plugged if not in use.

Power LED (unlabeled)		
Ref #	**LED Color**	**Description**
5	• Blue	• CAP L is powered on and operational.
	• Flashing blue	• CAP L is powered on and initializing.
	• Off	• CAP L is not powered on.
	For further information, see "Powering a CAP L" on page 82.	

© June 2017 CommScope, Inc.

CAP L with a Copper Interface and Power Cat 6A Cable

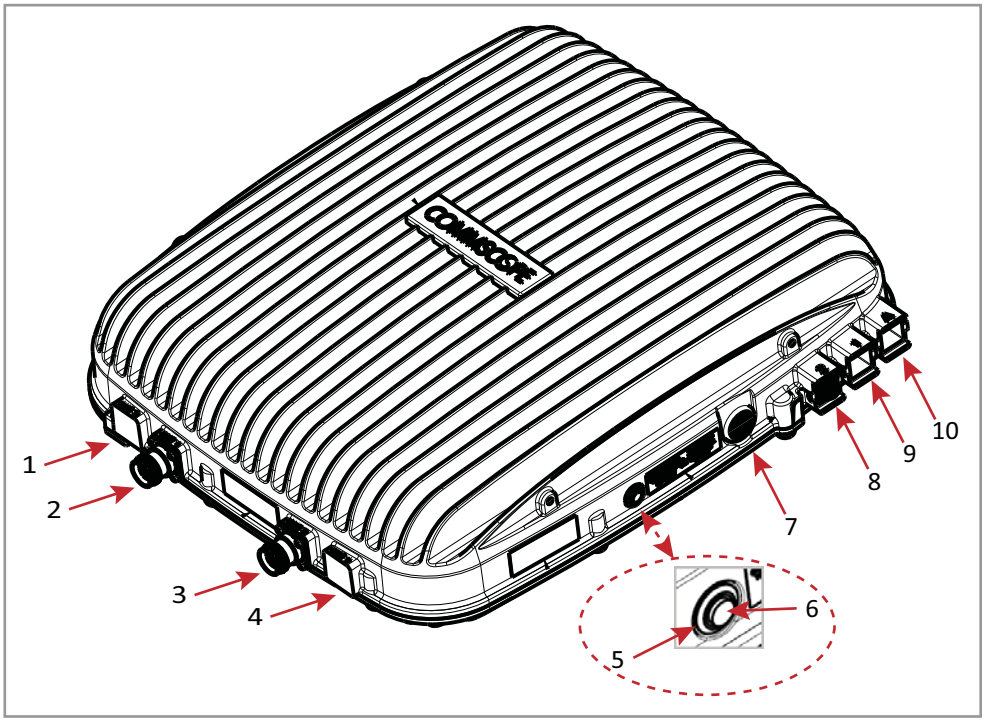

Connectors			
REF #	**Label**	**Description**	**Function**
1, 4	ANT 3, ANT 4	Not available; connector is plugged.	
2	ANT 1	4.3-10 RF connector	RF connectors that connect to two separate external antennas or to two ports on a cross-polarized dual antenna via 50Ω coaxial cable. Each connector supports two RF bands as described in Table 7-2 on page 77. The end of the 50Ω coaxial cable that connects to an ANT connector can be either a push-pull or a threaded connector. If not used, an ANT connector must be plugged.
3	ANT 2		
6	Unlabeled	Pushbutton switch	Turns power to CAP L on/off. Power to the CAP L may also be shutdown via the ION-E Series Software. [**verify can power off via GUI**] **CAUTION! Prior to disconnecting the Power cable from the CAP L, press the Power button to power off the CAP L.**
7	Unlabeled	36 to 60 Vdc Power connector	Plugged, not applicable to this model configuration.
8	2	Port 2	Plugged, not applicable to this model configuration.
9	1	Port 1	Port 1 connects to an ION-E CAN/TEN via CAT 6A cable and provides the main signal and power interface.
10	A	RJ-45 connector	The AUX port provides a cascade connection to an optional locally powered secondary CAP L, or provides a connection to external Ethernet devices such as WiFi and IP cameras. Cabling is via the appropriate CAT cable for the protocol; this model supports an 1000 BASE-T and 802.3at Class 3 Power over Cat6A Ethernet connection. Maximum attached cable length is 3 meters (9.8 feet). The AUX port must be plugged if not in use.

Power LED (unlabeled)		
Ref #	**LED Color**	**Description**
5	• Blue	• CAP L is powered on and operational.
	• Flashing blue	• CAP L is powered on and initializing.
	• Off	• CAP L is not powered on.
	For further information, see "Powering a CAP L" on page 82.	

Fan Interface Port

The preceding graphic shows the proprietary 8-pin Fan Interface port, which is available on all CAP L models. Fan Kits are factory installed. If the Fan Kit was ordered, the Fan Interface port will be cabled to the Fan Kit at the factory. If a Fan Kit is not ordered, the Fan Interface port is plugged.

Powering a CAP L

The CAP L Power-Down button is used only to power down the unit. Under normal operating conditions, the Power LED responds as listed below.

- If the CAP L is powered by a local power supply, the CAP L unit is always powered on.
- If the CAP L is powered over a data cable (Cat6A or fiber), the CAP L is automatically detected by the WCS/TEN and the link (power) comes up.
- If the CAP L is powered over CAT cabling or the head-end DC (hybrid fiber) supply is used, the CAP L is automatically detected and powered when it is connected to the WCS/TEN.

In any case, the Power LED turns on briefly when the unit is first detected. It will then go out briefly, followed by an initialization period during which the Power LED flashes slowly while the CAP L is configured. The LED will remain a steady blue (not flashing) once the unit reaches a fully operational state, which typically occurs within 45 seconds, but it can vary dramatically in different systems and configurations, especially if it's auto-updating.

© June 2017 CommScope, Inc.

CAP L Accessory Options

The following sections describe hardware options for the CAP L:

- "Fan Kit (PN 7724090-00)" on page 84
- "CAP L Flat Mounting Bracket Kit (PN 7774353-00)" on page 85
- "CAP L Power Supply / Hybrid Fiber Mounting Kit (PN 7774354-00)" on page 86
- "CAP L 240W AC/DC Power Supply Kit (PN 7775087-00)" on page 87
- "CAP OCTIS Kits (PNs 7773582-00 and 7760652-00)" on page 88.

© June 2017 CommScope, Inc.

Fan Kit (PN 7724090-00)

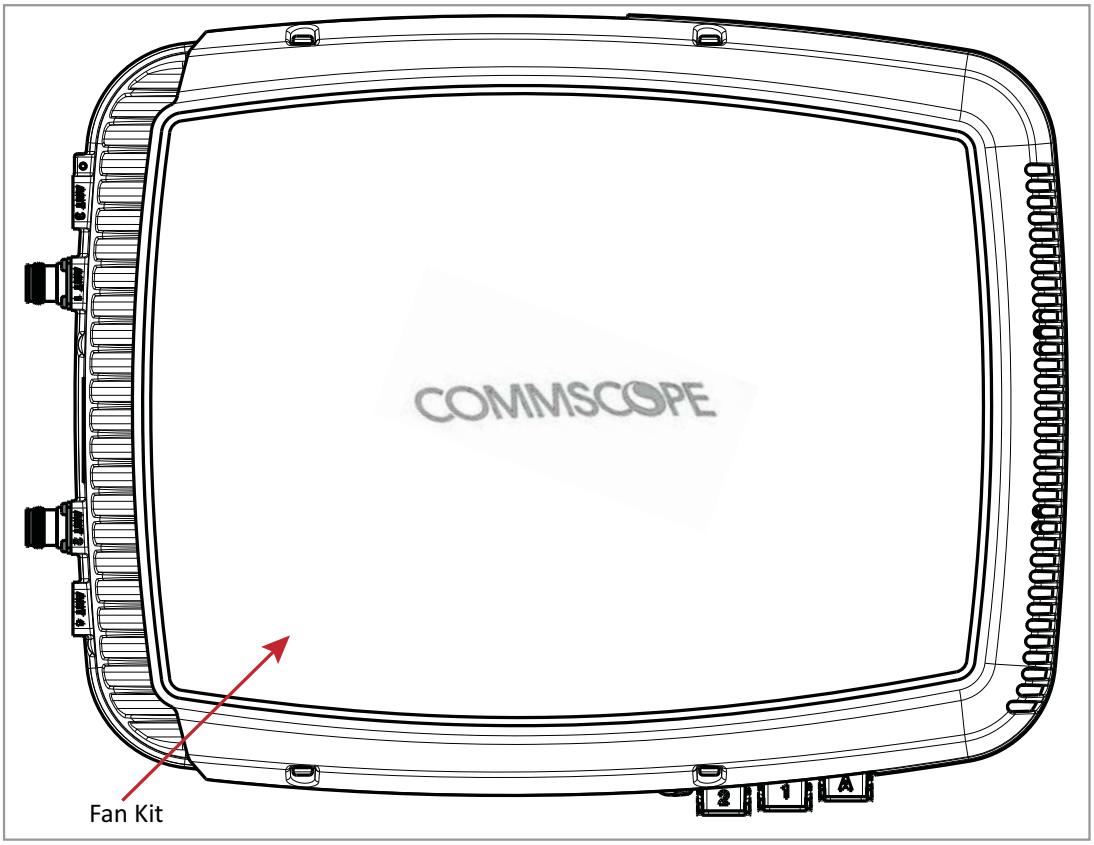

The optional Fan Kit (CommScope PN 7724090-00) is an integrated shroud that fits over the CAP L enclosure to extend the upper ambient temperature range. The Fan Kit

- is IP55 rated
- increases the passively cooled temperature range to -33°C to +55°C (-27.4°F to 131°F)
- requires that the CAP L be installed in a horizontal position as shown above
- adds 7W power consumption to the CAP L; this means that if the CAP L is utilizing all of its subbands and is powering an external 1 Gb Ethernet device (20W at the AUX port), the CAP L's power consumption can be as high as 125W.
- is factory installed, but can be replaced in the field.

Table 7-3 lists the Fan Kit components.

Table 7-3. *Fan Kit (PN 7724090-00)*

Quantity	Part Number	Component
1		Fan Shroud
1		Fan Harness

© June 2017 CommScope, Inc.

CAP L Flat Mounting Bracket Kit (PN 7774353-00)

The CAP L Flat Mounting Bracket Kit (CommScope PN 7774353-00) provides the mounting brackets required to mount an CAP L to a wall or other flat surface.

CAP L Power Supply / Hybrid Fiber Mounting Kit (PN 7774354-00)

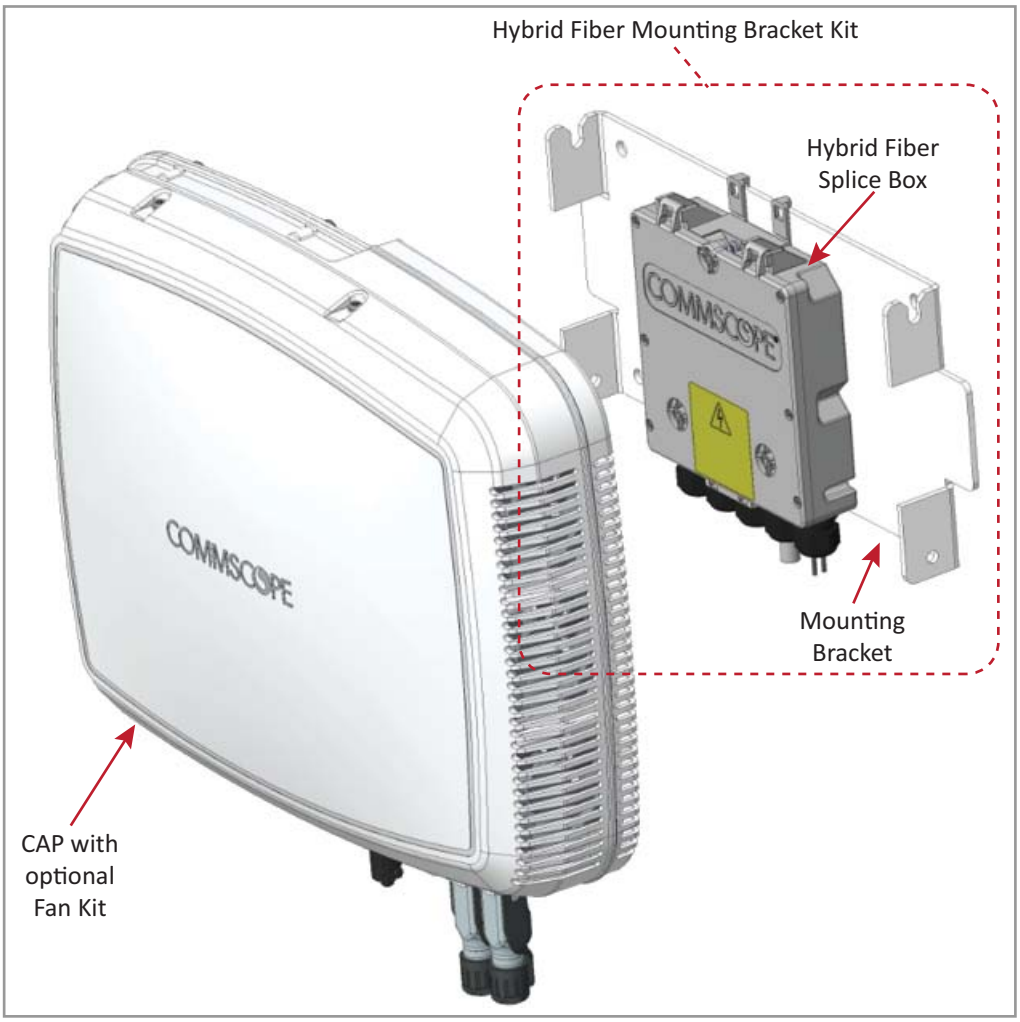

The CAP L Power Supply / Hybrid Fiber Mounting Kit (CommScope PN 7774354-00) separates the power from the fiber signals on a hybrid fiber feed from the CAN/TEN.

UNRESOLVED: **We need to add information as to why would a customer would purchase this option. We need to make a statement such as, "Use a Power Supply / Hybrid Fiber Mounting Kit when the CAP L must be powered by …"**

© June 2017 CommScope, Inc.

CAP L 240W AC/DC Power Supply Kit (PN 7775087-00)

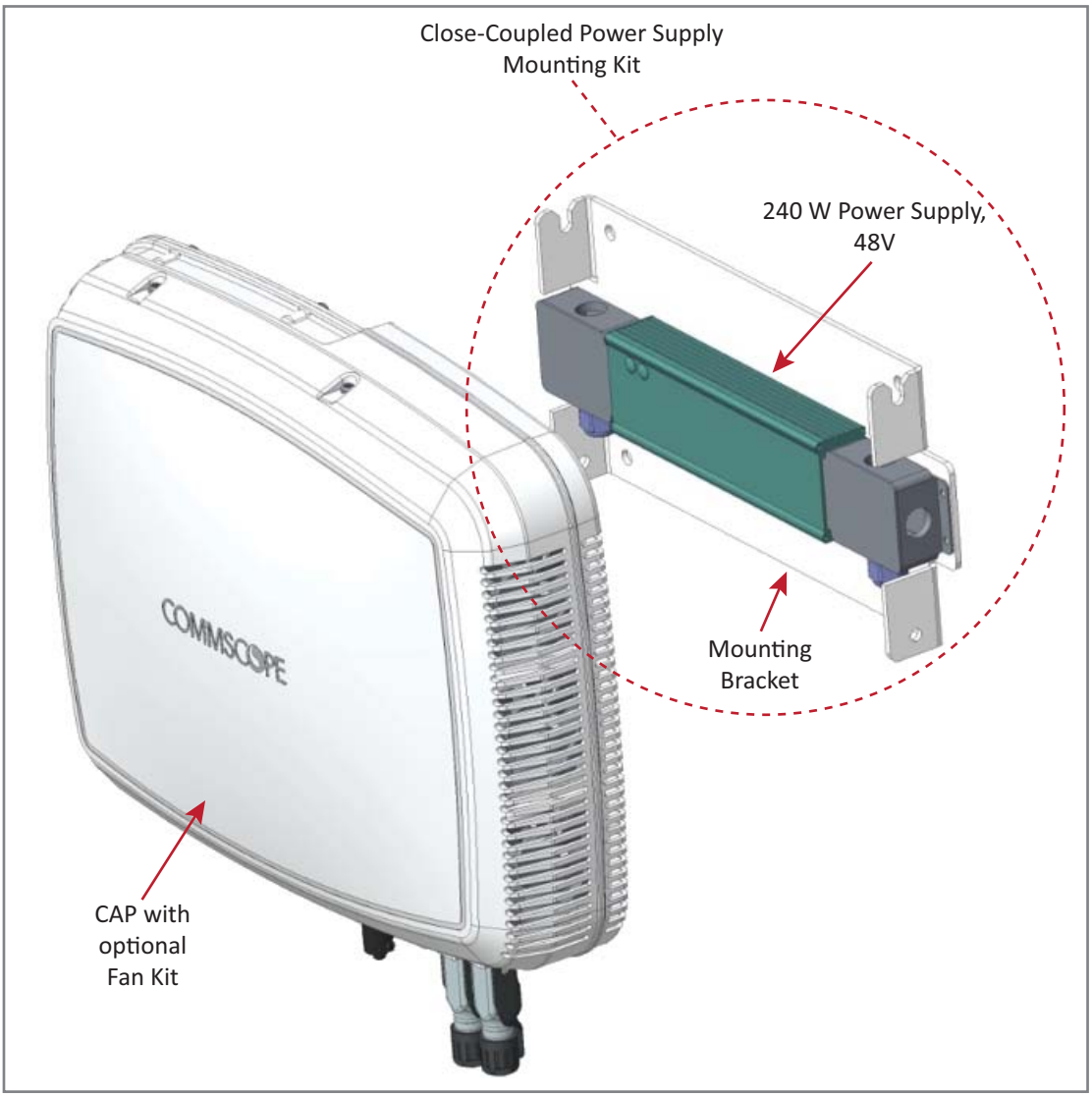

The CAP L 240W AC/DC Power Supply Kit (CommScope PN 7775087-00) provides a 240 W, 48V External Power Supply that converts local AC power to DC power for the CAP L.

UNRESOLVED: **We need to add information as to why would a customer would purchase this option. We need to make a statement such as, "Use a 240W AC/DC Power Supply Kit when the CAP L must be powered by …"**

CAP OCTIS Kits (PNs 7773582-00 and 7760652-00)

All CAP Ls include one OCTIS Kit for the primary interface to the CAN/TEN. You can order an additional OCTIS Kit, which would allow you to cascade two CAP Ls, or to attach an auxiliary Ethernet device.

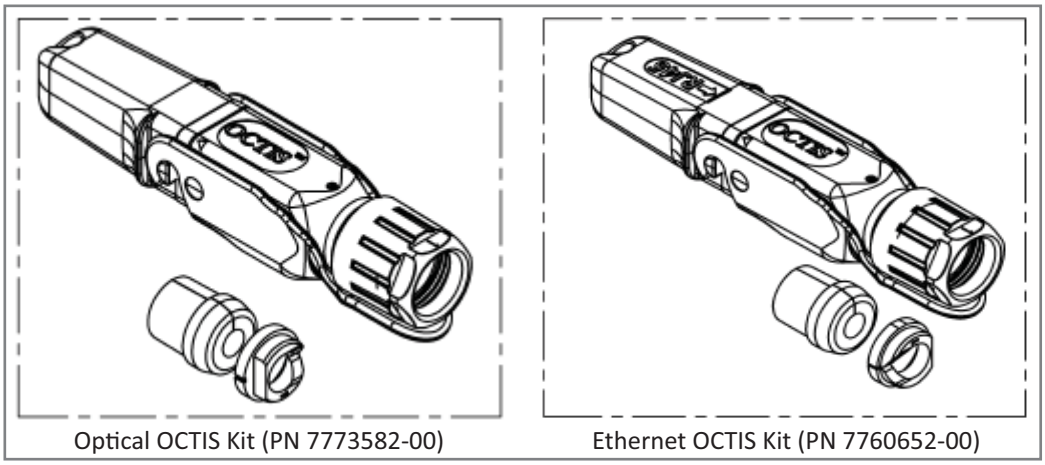

Optical OCTIS Kit (PN 7773582-00) Ethernet OCTIS Kit (PN 7760652-00)

Kit Name	CommScope PN	Description
Optical OCTIS Kit	7773582-00	Use only with fiber CAP Ls to cascade a secondary fiber unit.
Ethernet OCTIS Kit	7760652-00	Use with fiber or copper CAP Ls to cascade a secondary copper unit, or to attach an auxiliary Ethernet device.

UNRESOLVED: **I wasn't sure which view to show here from the OEM data sheets. Please advise if another view would be better to use.**

© June 2017 CommScope, Inc.

Installing CAP Ls

This section describes how to install a CAP L; for information on how to install a UAP, UAP-N25, or UAP-X, go to "Installing UAPs" on page 53.

Prepare for Installation

Do the following before beginning installation.

- Review and know the cautions in "General Installation Safety Requirements" on page 95.
- Review the system design plan.
- Identify the equipment installation site.
- Review the power requirements to make sure the site can support this installation.
- Map out all cable runs.
- Identify and obtain all tools and materials required to complete the installation.

Recommended Tools

- Electrostatic Discharge (ESD) wrist strap
- #2 Phillips screwdriver
- Drill and bits to mount CAP L to a wall or ceiling [**not sure what tools are needed**]
- Fiber cleaning equipment

Recommended Materials

- #18 AWG (1.0 mm) insulated stranded copper wire for chassis ground [**I used a standard gauge, not sure if we recommend this or another gauge**]
- **some type of screw to attach mounting brackets to wall/ceiling**

Determine the Power Consumption of the CAP L

Use the power consumption matrix in Table 7-4 to calculate power consumption for a CAP L, where

- the consumption numbers are at the CAP L power inputs and do not account for feed losses
- the maximum consumption configuration used includes the maximum auxiliary Power over Cat6A output allowed, which is 4 bands at 75MHz each (fans at max speed as applicable).

Table 7-4. *CAP L Power Consumption*

Configuration	Voltage Range (V)	Typical Power (W)	Maximum Power (W)
Optical Fiber Interface, no Fan Kit			
Optical Fiber Interface, with Fan Kit			
Copper Interface and External DC Power, no Fan Kit [1]	36 - 60		
Copper Interface and External DC Power, with Fan Kit [1]	36 - 60		
Copper Interface and Power Cat 6A Cable, no Fan Kit			
Copper Interface and Power Cat 6A Cable, with Fan Kit			
1 Does not include consumption of optional local DC supply.			

UNRESOLVED: I know that the Fan Kit adds 7W, this is the type of information we must provide installers

Determine the CAP L Mounting Site

When deciding on a suitable mounting site, observe the following rules:

- The CAP L is suitable for installation indoors for any unit.
- A CAP L with an Optical Fiber Interface can be installed outside only if it has a Fan Kit.
- Use the weights listed in Table 7-5 to determine a site that can bear the weight of the CAP L that is being installed.
- Use the dimensions shown in Figure 7-1 on page 91 through Figure 7-3 on page 92.
- Refer also to "Mounting Orientation" on page 93.

Table 7-5. *Maximum CAP L Installation Weights**

CAP L Configuration	No Fan Kit		With Fan Kit	
	kg	lbs.	kg	lbs.
with Flat Mounting Bracket	10.98	24.20	11.47	25.28
with 240W AC/DC Power Supply Kit	13.95	30.75	14.44	31.83
with Power Supply / Hybrid Fiber Mounting Kit	TBD	TBD	TBD	TBD
* This is the maximum weight that must be supported when lifting a CAP L for installation. It is also the maximum weight that the installation site must be able to support. This weight does not include the weight of the external cables and connectors.				

© June 2017 CommScope, Inc.

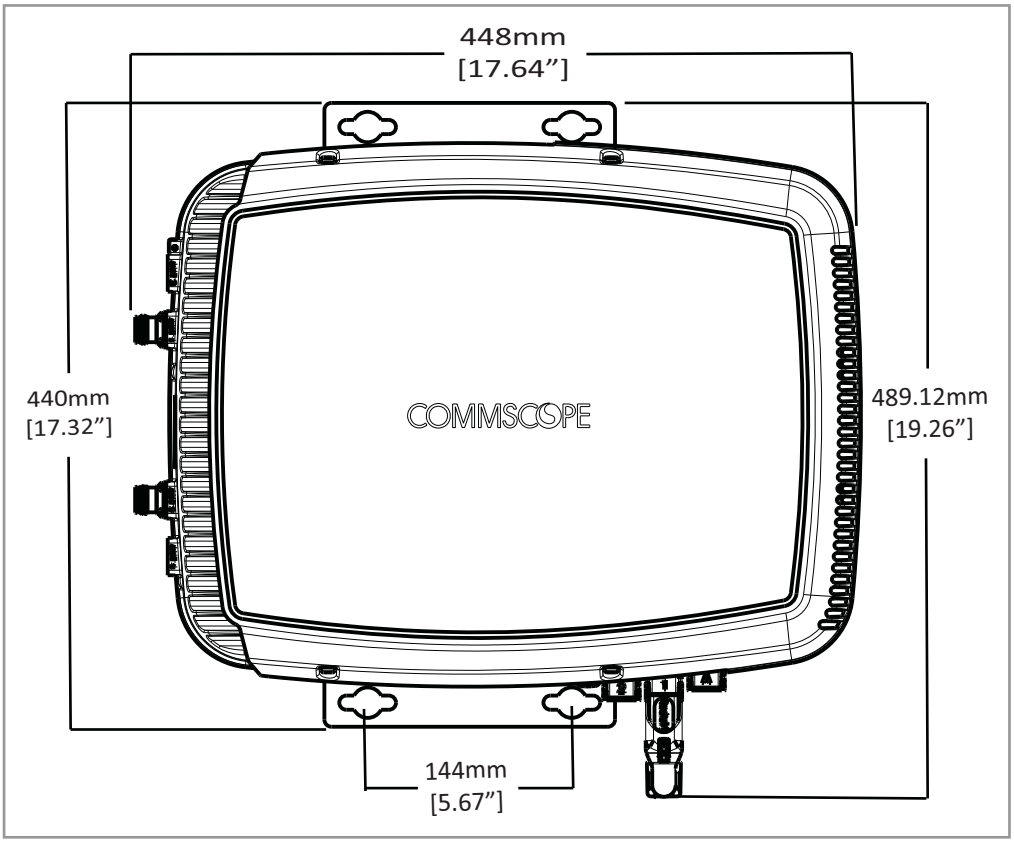

Figure 7-1. Mounting Dimensions for a CAP L Mounted with the Flat Mounting Bracket Kit

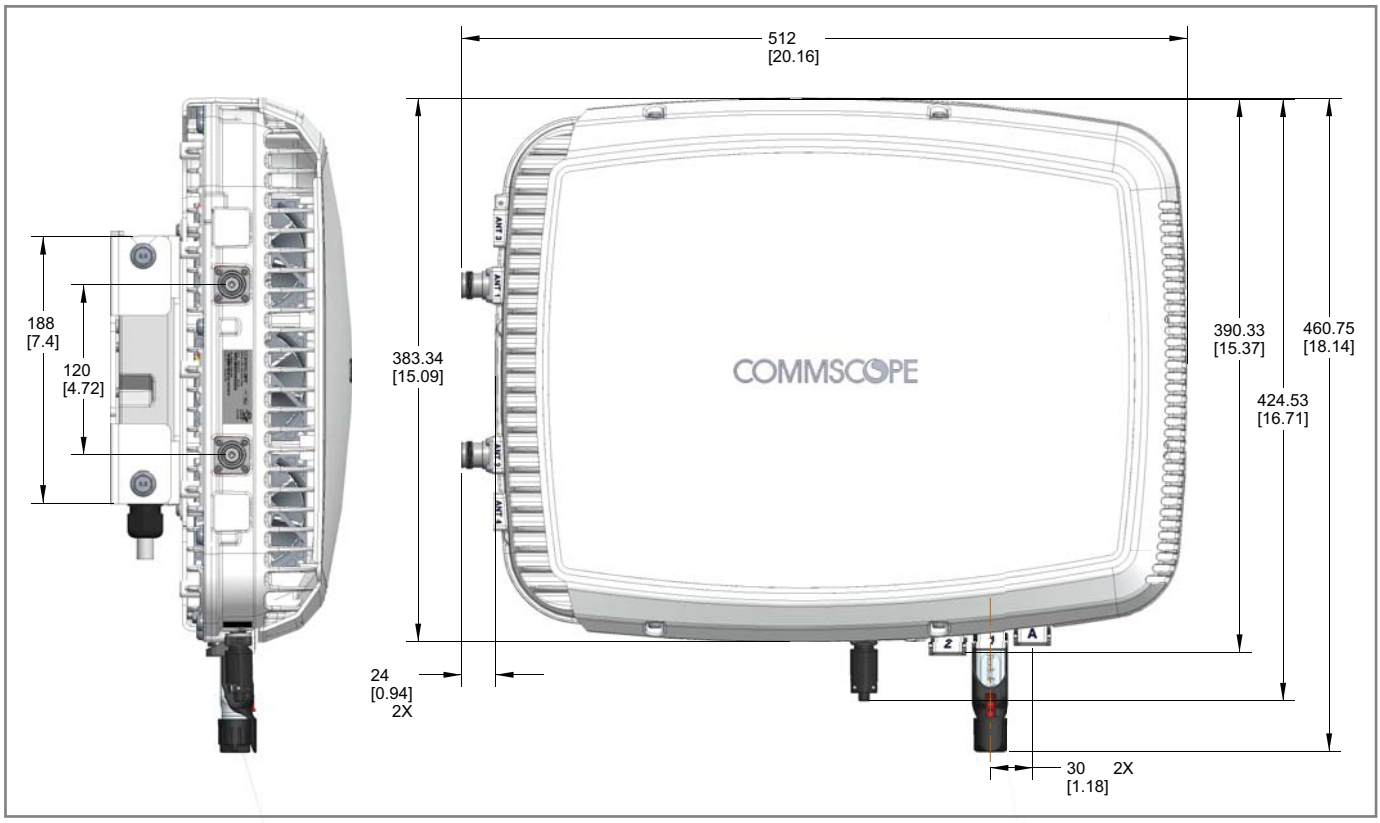

Figure 7-2. Mounting Dimensions for a CAP L Mounted with the Power Supply / Hybrid Fiber Mounting Kit

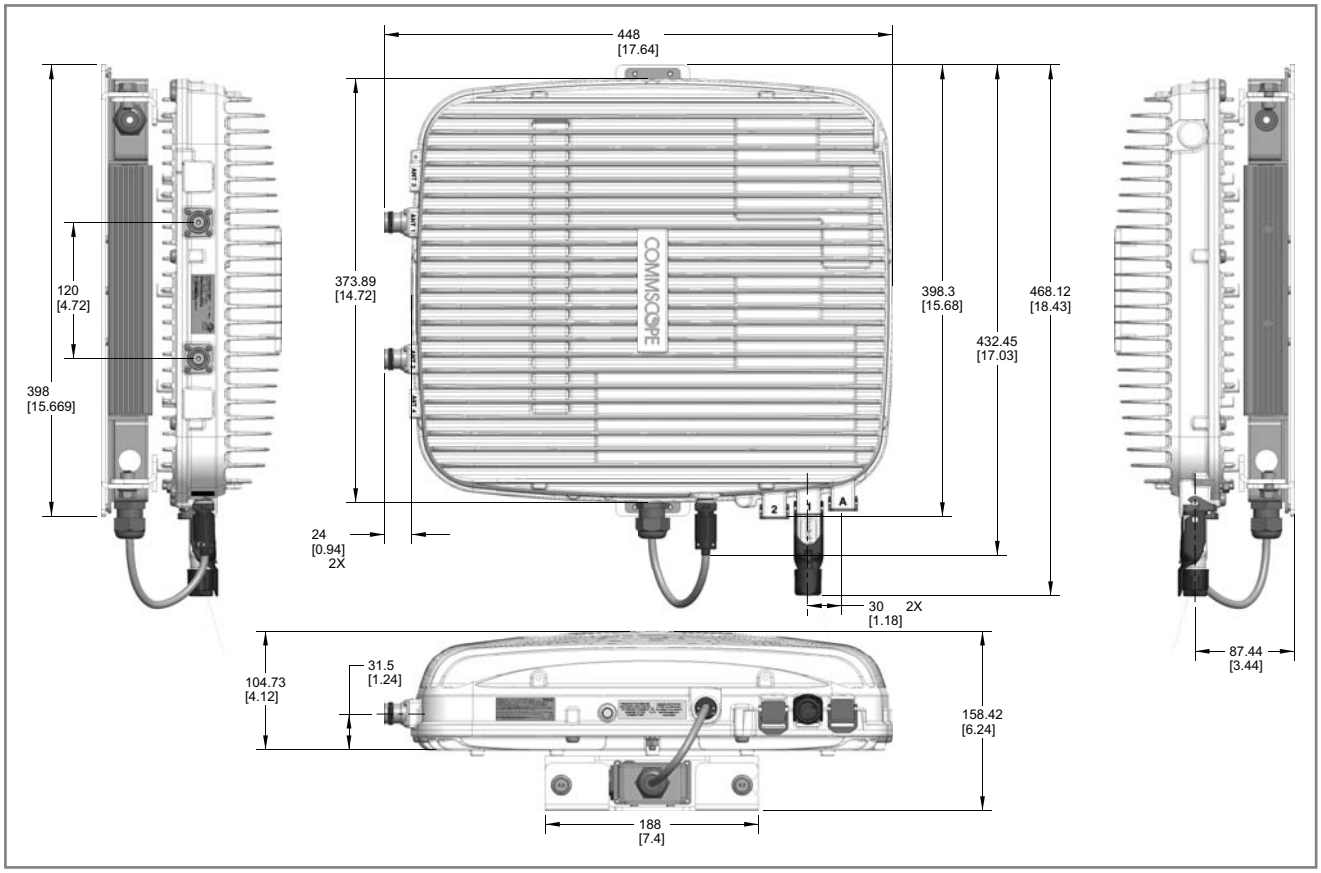

Figure 7-3. Mounting Dimensions for a CAP L Mounted with the 240W AC/DC Power Supply Kit

© June 2017 CommScope, Inc.

Mounting Orientation

The CAP L should only be mounted as described below.

Always mount a CAP L that does not have the optional Fan Kit vertically, with the 4.3-10 antenna connectors pointing down; see Figure 7-4.

Always mount a CAP L that has an optional Fan Kit installed horizontally, with the OCTIS connector pointing down; see Figure 7-5 on page 94.

Figure 7-4. Mounting Orientation for a CAP L without the Optional Fan Kit (Flat Mounting Bracket Shown)

Figure 7-5. Mounting Orientation for a CAP L with the Optional Fan Kit (Flat Mounting Bracket Shown)

© June 2017 CommScope, Inc.

Mounting Cautions

Attach all CAP Ls securely to a stationary object as described in this installation guide.

Do not mount a passive-cooled CAP L (that is, does not have a Fan Kit) in a wall-mounted orientation with the fins running horizontally; this results in a reduced maximum operating temperature of 35°C (95°F).

Only a CAP L with a Fan Kit can be ceiling mounted. A CAP L without a Fan Kit cannot be ceiling mounted due to thermal constraints when the fins are pointed downward.

To maintain proper ventilation, keep at least 76 mm (3-inch) clearance around the CAP L. Do not stack CAP Ls on top of each other. Always mount the CAP L with the face containing the mounting holes against the mounting surface.

If a passive-cooled CAP L is floor mounted, the CAP L requires a minimum 203.2 mm (8-inch) clearance above the unit.

The installation site must be able to bear the weight of the CAP L; see Table 7-5 on page 90.

General Installation Safety Requirements

Follow all of the installation cautions listed below and in "Mounting Cautions" on page 95.

Wet conditions increase the potential for receiving an electrical shock when installing or using electrically powered equipment. To prevent electrical shock, never install or use electrical equipment in a wet location or during a lightning storm.

This system is a RF Transmitter and continuously emits RF energy. Maintain a minimum 8-inch (20 cm) clearance from the antenna while the system is operating. Whenever possible, shut down the RAN before servicing the antenna.

Do not remove caps from any of the connectors until instructed to do so.

A CAP L with a Copper Interface and External DC Power and a CAP L with a Copper Interface and Power Cat 6A Cable are not designed for outdoor installations. However, the antenna to which the Copper Interface units attach can be outdoors as long as suitable lightning-protection devices are used at the antenna site.

Guard Against Damage from Electro-Static Discharge

Electro-Static Discharge (ESD) can damage electronic components. To prevent ESD damage, always wear an ESD wrist strap when working with the CAP L and when handling any of its components. Connect the ground wire on the ESD wrist strap to an earth ground source before touching the CAP L or any of its components. Wear the wrist strap the entire time that you work with the CAP L and its components.

© June 2017 CommScope, Inc.

Unpack and Inspect the CAP L and Optional Accessories

1. Inspect the exterior of the shipping container(s) for evidence of rough handling that may have damaged the components in the container.
2. Unpack each container while carefully checking the contents for damage and verify with the packing slip.
3. If damage is found or parts are missing, file a claim with the commercial carrier and notify CommScope Technical Support (see "Contacting DCCS Global Technical Support" on page 126). Save the damaged cartons for inspection by the carrier.
4. Save all shipping containers for use if the equipment requires shipment at a future date.

Installing a CAP L

The following sections guide you through installing a CAP L. Follow the procedures and the steps in the order in which they are provided. Follow the procedure that is applicable to the CAP L that is being installed:

- "Mount the CAP L" on page 96
- "(Optional) Ground the CAP L" on page 110
- "Connect the CAP L Cables" on page 111

Mount the CAP L

The CAP L is suitable for installation as follows:

- Indoors—any of the CAP Ls can be installed indoors.
- Outside—only the Optical Fiber CAP Ls with a Fan Kit can be installed outdoors.

Mounting instructions are divided into the sections listed below.

- The following sections apply to all installations:
  - "Mounting Cautions" on page 95—this information applies to all installations
  - "Mounting Orientation" on page 93—this information applies to all installations
- Follow the mounting instructions that are appropriate for this installation:
  - "Flat-Surface Mount a CAP L" on page 97
  - "Wall Mount a CAP L Using a Flat Mounting Bracket Kit (PN 7774353-00)" on page 97
  - "Ceiling Mount a CAP L" on page 109
  - "Wall Mount a CAP L Using a 240W AC/DC Power Supply Kit (PN 7775087-00)" on page 106.

© June 2017 CommScope, Inc.

Flat-Surface Mount a CAP L

You can place a CAP L, without its fastening hardware, on a flat surface, such as a shelf, desk, cabinet, or any other horizontal surface that allows stable placement.

The surface must be able to bear the weight of the CAP L; see Table 7-5 on page 90.

If you mount the CAP L on a flat surface, follow the rules listed below.

Always mount the CAP L with the face containing the mounting holes against the mounting surface.

To maintain proper ventilation, keep at least 76 mm (3-inch) clearance around the CAP L.

Do not stack CAP Ls on top of each other.

Wall Mount a CAP L Using a Flat Mounting Bracket Kit (PN 7774353-00)

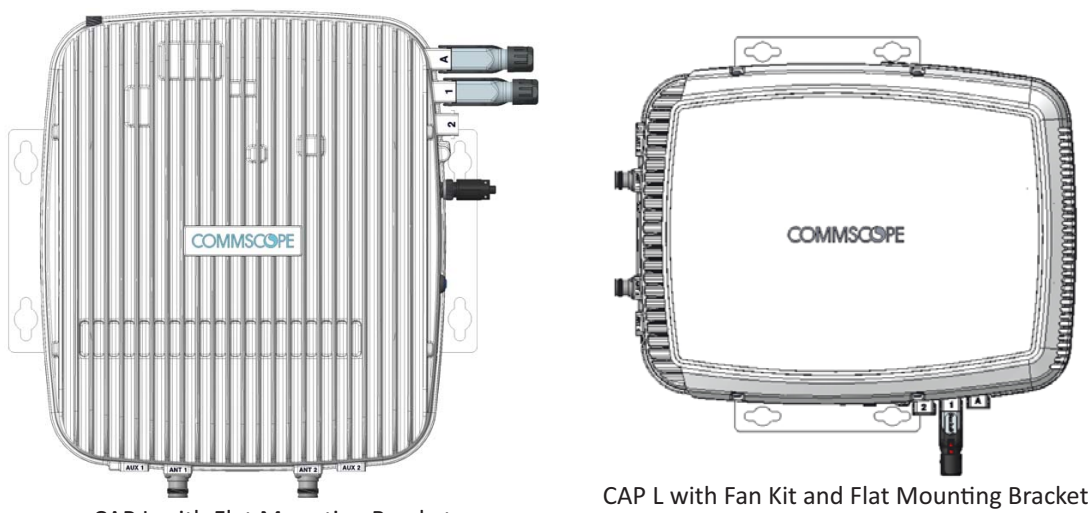

CAP L with Flat Mounting Bracket (mount vertically)

CAP L with Fan Kit and Flat Mounting Bracket (mount horizontally)

1 Follow the steps in "Unpack and Inspect the CAP L and Optional Accessories" on page 96. Table 7-6 lists the Flat Mounting Bracket Kit components.

Table 7-6. *Flat Mounting Bracket Kit (PN 7774353-00)*

Quantity	Part Number	Component
2	7725696	Mounting Brackets
6	100901-50	M6-1.0 x 14mm screws

2 Refer to and observe all cautions listed in "Mounting Cautions" on page 95.

3 Refer to "Determine the CAP L Mounting Site" on page 90 to determine the mounting location, which must be able to support the weight and dimensions of the CAP L.

4 Refer to "Mounting Orientation" on page 93 to determine the mounting orientation of the CAP L.

© June 2017 CommScope, Inc.

5 Attach the two mounting brackets to the back of the CAP L enclosure.

   a Use three of the M6-1.0 x 14mm screws (PN 100901-50) that came with the Flat Mounting Bracket Kit to attach the left or top mounting bracket to the three corresponding horizontal or vertical M6-1.0 mounting taps on the back of the CAP L chassis.

   b Use three of the M6-1.0 x 14mm screws that came with the Flat Mounting Bracket Kit to attach the right or bottom mounting bracket to the three corresponding horizontal or vertical M6-1.0 mounting taps on the back of the CAP L chassis.

6 Use four 5/16-inch or M8 lag screws (or whatever screw type is appropriate for the material to which the CAP L is to mounted on) to mount the CAP L to the wall.

7 Follow the steps in "(Optional) Ground the CAP L" on page 110 if grounding is required in your locality or if you prefer to ground the CAP L.

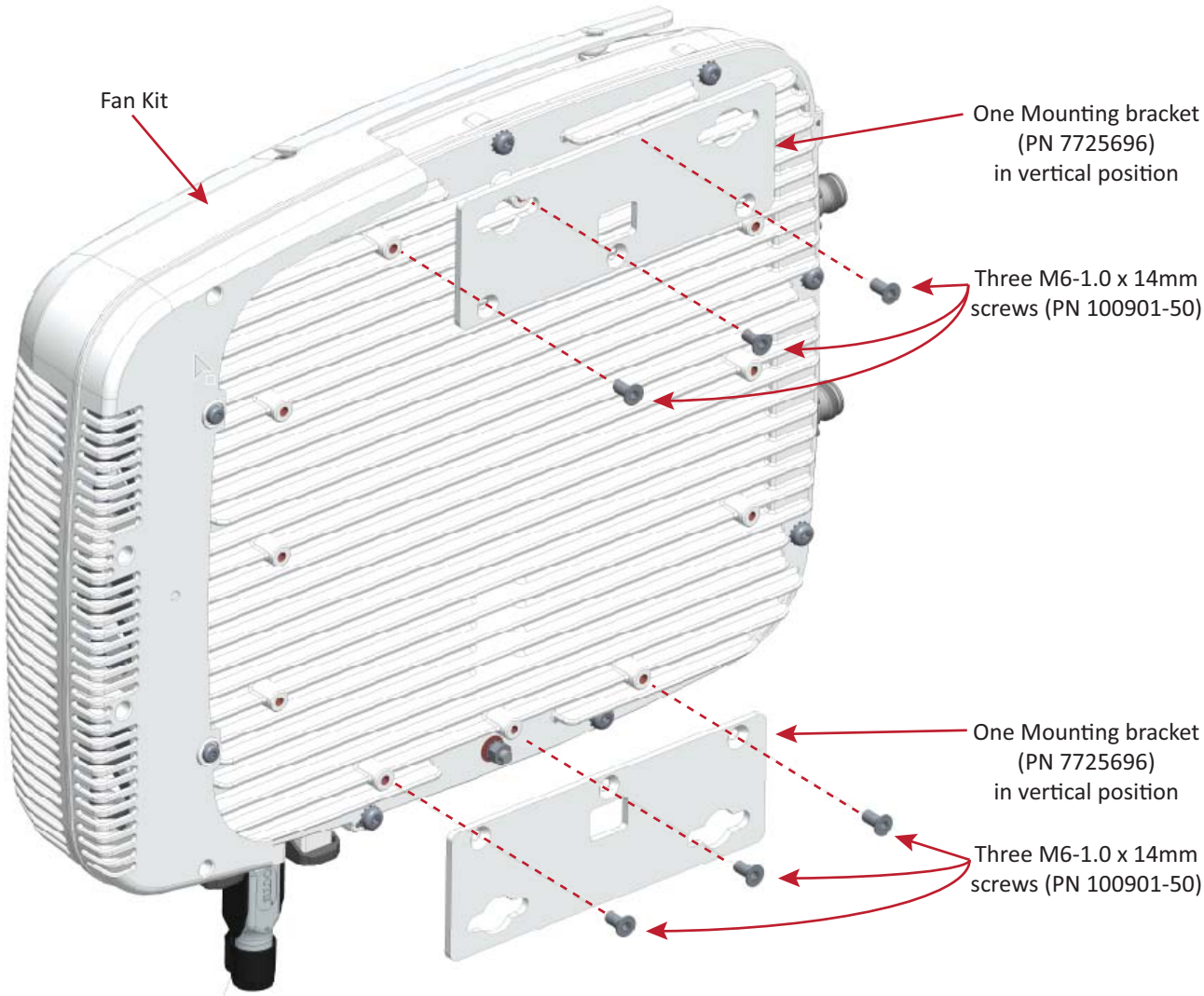

NOTE: Install a CAP L that does not have a Fan Kit vertically.

Figure 7-6. CAP L (No Fan Kit) with Flat Mounting Bracket Kit

© June 2017 CommScope, Inc.

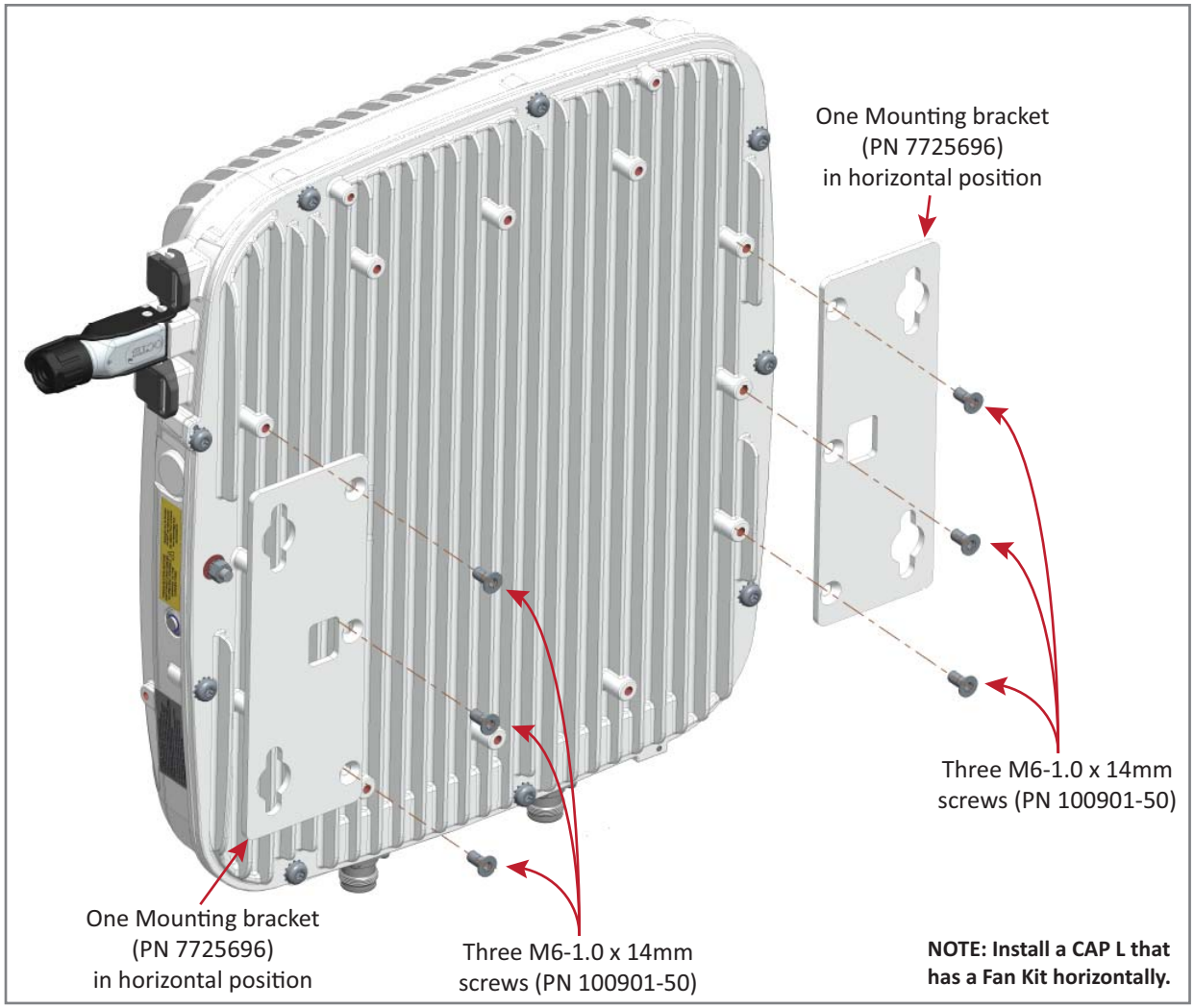

Figure 7-7. CAP L with a Fan Kit and Flat Mounting Bracket Kit

Wall Mount a CAP L Using a Power Supply / Hybrid Fiber Mounting Kit (PN 7774354-00)

CAP L with
Power Supply / Hybrid Fiber Mounting Kit
(mount vertically)

CAP L with Fan Kit and
Power Supply / Hybrid Fiber Mounting Kit
(mount horizontally)

1 Follow the steps in "Unpack and Inspect the CAP L and Optional Accessories" on page 96. Table 7-7 lists the Power Supply / Hybrid Fiber Mounting Kit components.

Table 7-7. *Hybrid Fiber Mounting Kit (PN 7774354-00)*

Quantity	Part Number	Component
4	100762-1	M8x16 flange-head screws
6	100901-50	M6-1.0 x 14mm screws
1	7771350	Wall Mounting Bracket
2	7771351	Angled Mounting Brackets
1	7693816-00	Hybrid Fiber Splice Box

2 Refer to "Determine the CAP L Mounting Site" on page 90 to determine the mounting location, which must be able to support the weight and dimensions of the CAP L.

3 Refer to "Mounting Orientation" on page 93 to determine the mounting orientation of the CAP L.

4 Assemble the cables in the Hybrid Fiber Splice Box (PN 7693816-00)

a Open the Splice Box and remove the installation kit that is inside.

© June 2017 CommScope, Inc.

b Insert the Splice Holder (PN 7582294) and fasten it using a PTK 30x6 screw (PN 7692771) and one M4 washer (PN 7143057).

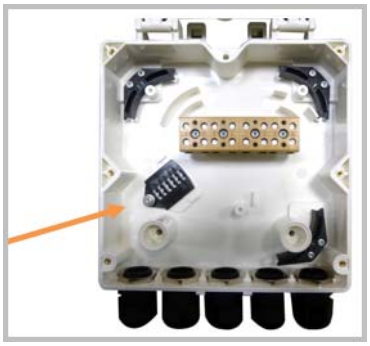

c Strip the insulation of the composite cable for 100 cm and the fibers for 90 cm, and then shorten the copper cables to 25 cm.

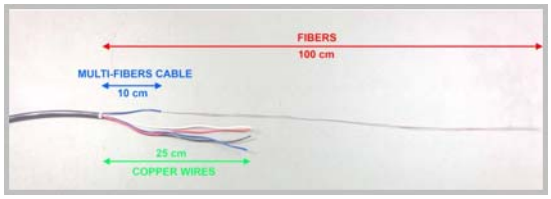

d Insert the composite cable in the first cable gland and separate the multi-fibers cable from the copper wires. It is necessary to remove the nut to perform this action. The cable must be fed through the nut and it has to be retightened once finished.

e Bend the spliced fibers using the corner guides and fix the splices to the splice holder.

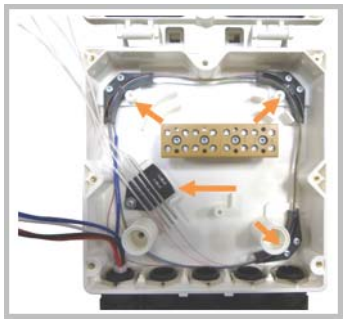

f Bend the optical cables as show in the picture to the right.

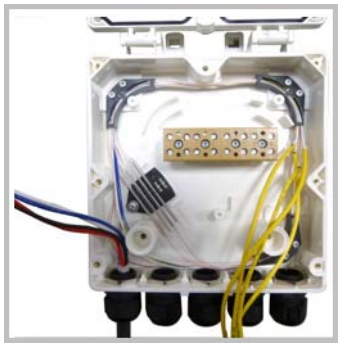

g If a second splice holder is needed, it can be assembled using the M4 insulating washer (PN 7696866) and two M4 plain washers (PN 7143057), as shown to the right. The required screw is a PTK30 x 12 (PN 7696787).

h Mount the internal support Splice Box ION-U RU (PN 7683602-00) using three PTK30 x 6 (PN 7692771) screws.

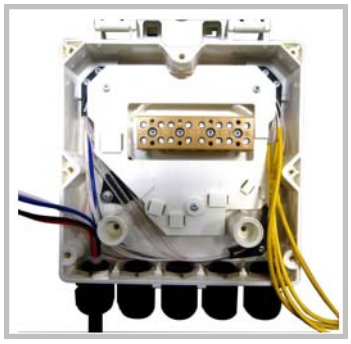

i Remove the sealing nut and rubber of the cable gland and insert the optical cables.

j Place each cable into one of the grooves of the seal insert (PN 7682791-00).

k Press the seal insert into the clamp ring opening.

l Fix the optical cables inside the box using one cable tie (PN 7582282) and tight the sealing nut.

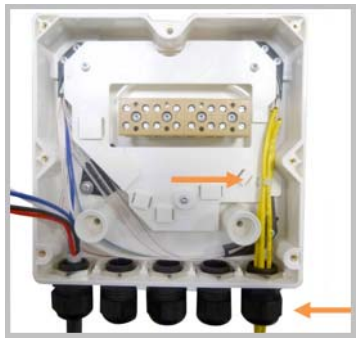

© June 2017 CommScope, Inc.

m It is possible to separate the optical cables and use two different cable glands. Remove the sealing nut and rubber on each cable gland.

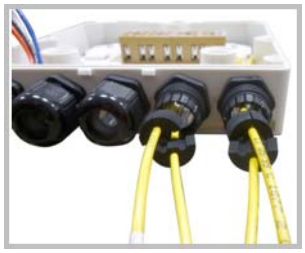

n Close all unused grooves with the plastic cylinders (PN 7157164), no matter if one or two cable glands are used.

o Insert the copper wires in the first multiple terminal connectors. See markings on the internal support. Then fasten the copper cables inside the box using one cable tie (PN 7582282).

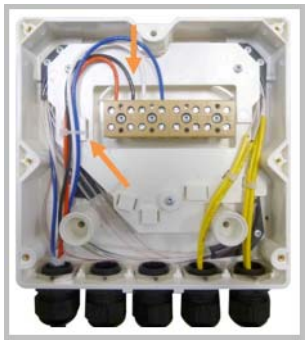

p Remove the sealing nut and insert the Remote Unit supply cable (PN 7163674) and tighten the sealing nut.

q Connect the supply cable to the terminal strip and fix it inside the box using one cable tie (PN 7582282). It is possible to connect a second supply cable.

r In case of using remote unit Vdc/100 connect the supply cable (PN 7669706-00) as shown besides. Refer to markings on the internal support.

5 Attach the Hybrid Fiber Splice Box (PN 7693816-00) to the Wall Mounting Bracket (PN 7771350). [**Use what screws? None were shown in the assembly drawings. Or does it clip to the bracket?**]

6 Use the six M6-1.0 x 14mm screws (PN 100901-50) to attach the two Angled Mounting Brackets (PN 7771351) to the back of the CAP L chassis.

Refer to one of the following figures for the location of the corresponding six M6-1.0 mounting taps:

- CAP L, no Fan Kit—Figure 7-8
- CAP L with Fan Kit—Figure 7-9 on page 105.

7 Use the four M8x16 flange-head screws (PN 100762-1) to attach the assembled Hybrid Fiber Splice Box and Wall Mounting Bracket to the Angled Mounting Brackets that you attached to the CAP L in Step 6.

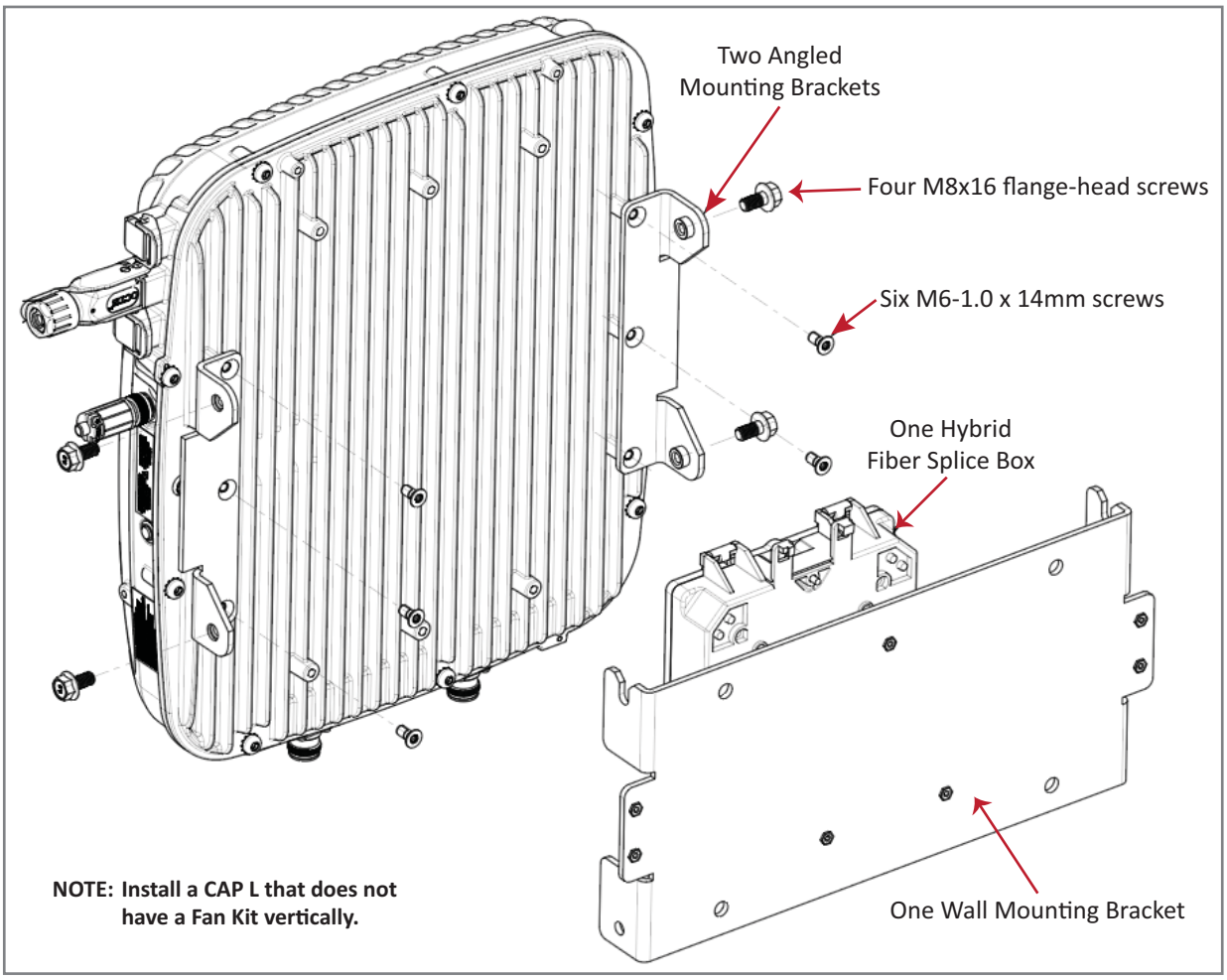

Figure 7-8. CAP L (No Fan Kit) with Power Supply / Hybrid Fiber Mounting Kit

© June 2017 CommScope, Inc.