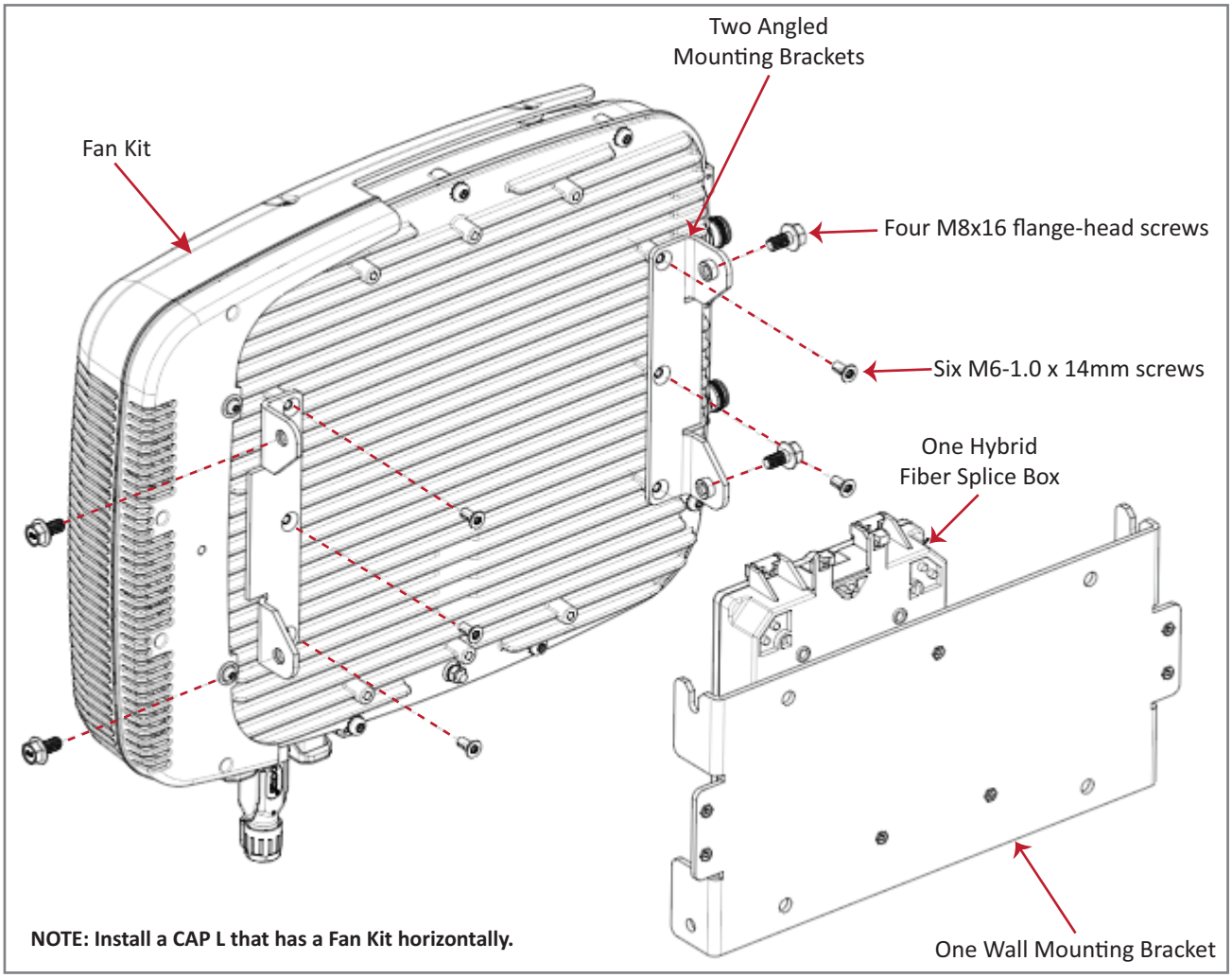

Figure 7-9. CAP L with Fan Kit and with Power Supply / Hybrid Fiber Mounting Kit

8 Follow the steps in "(Optional) Ground the CAP L" on page 110 if grounding is required in your locality or if you prefer to ground the CAP L.

Wall Mount a CAP L Using a 240W AC/DC Power Supply Kit (PN 7775087-00)

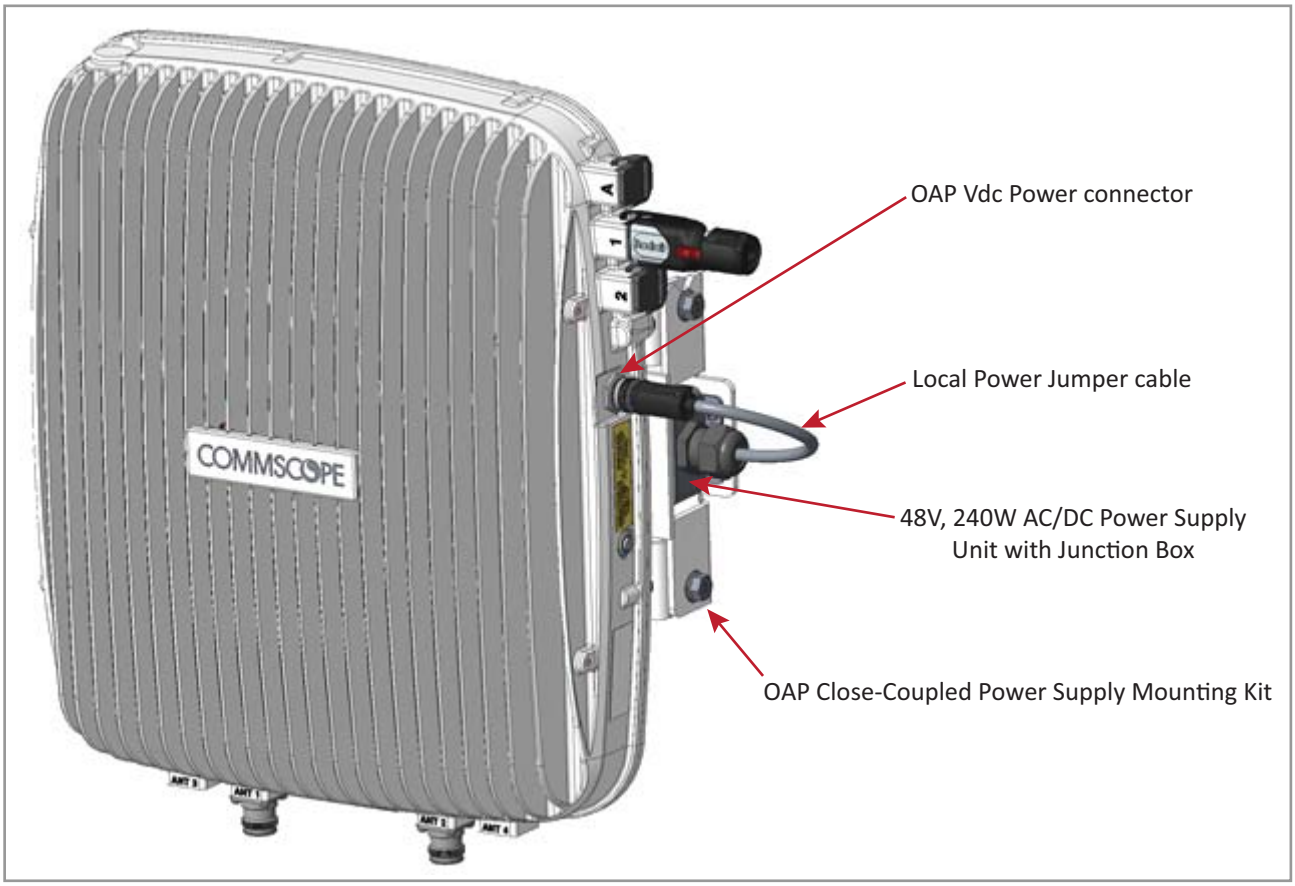

Figure 7-10. CAP L with a Power Supply / Hybrid Fiber Mounting Kit

1 Refer to and observe all cautions listed in "Mounting Cautions" on page 95.

2 Refer to "Determine the CAP L Mounting Site" on page 90 to determine the mounting location, which must be able to support the weight and dimensions of the CAP L.

3 Refer to "Mounting Orientation" on page 93 to determine the mounting orientation of the CAP L.

4 Follow the steps in "Unpack and Inspect the CAP L and Optional Accessories" on page 96. Table 7-8 lists the 240W AC/DC Power Supply Kit components.

Table 7-8. *240W AC/DC Power Supply Kit Components (PN 7775087-00)*

Quantity	Part Number	Component
1	7771350	Wall Mounting Bracket
2	7771351	Angled Mounting Brackets
1	7774061	Local Power Jumper Cable Assembly
1	7774356	48V, 240W AC/DC Power Supply Unit with Junction Box
4	100762-1	M8x16 flange-head screws
6	100901-50	M6-1.0 x 14mm screws
4	100907-126	

© June 2017 CommScope, Inc.

5 Assemble the 240W AC/DC Power Supply Kit.

   a Attach the Local Power Jumper Cable Assembly (PN 7774061) to the AC/DC Power Supply Junction Box (PN 7774356).

   b Use the four screws (PN 100907-126) to attach the 240W AC/DC Power Supply assembly to the Wall Mounting Bracket (PN 7771350).

6 Use the six M6-1.0 x 14mm screws (PN 100901-50) to attach the two Angled Mounting Brackets (PN 7771351) to the back of the CAP L chassis.

   Refer to one of the following figures for the location of the corresponding six M6-1.0 mounting taps:

   - CAP L, no Fan Kit—Figure 7-11
   - CAP L with Fan Kit—Figure 7-12 on page 108.

7 Use the four M8x16 flange-head screws (PN 100762-1) to attach the assembled 240W AC/DC Power Supply Kit and Wall Mounting Bracket to the Angled Mounting Brackets that you attached to the CAP L in Step 6.

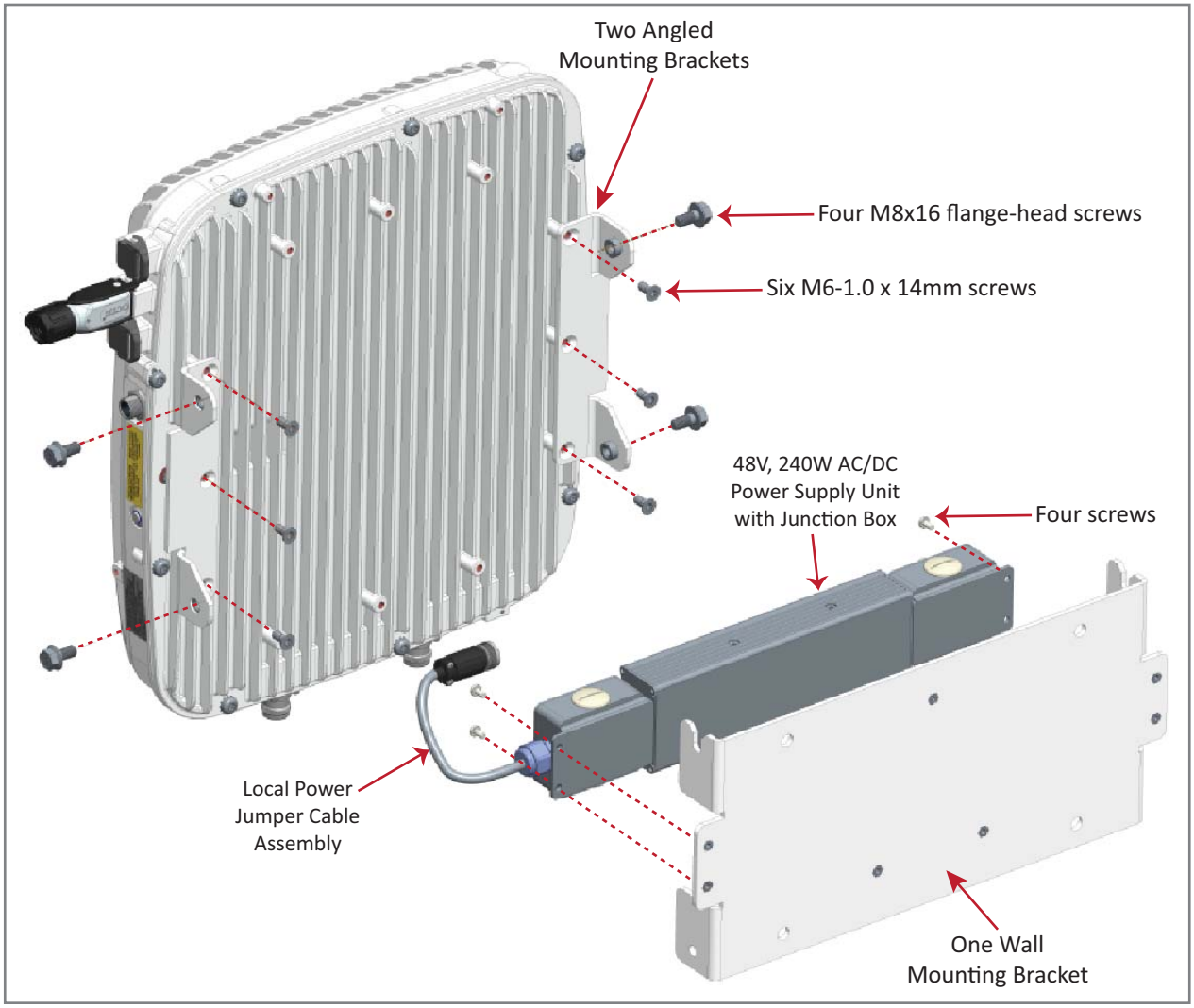

Figure 7-11. CAP L (No Fan Kit) with 240W AC/DC Power Supply Kit

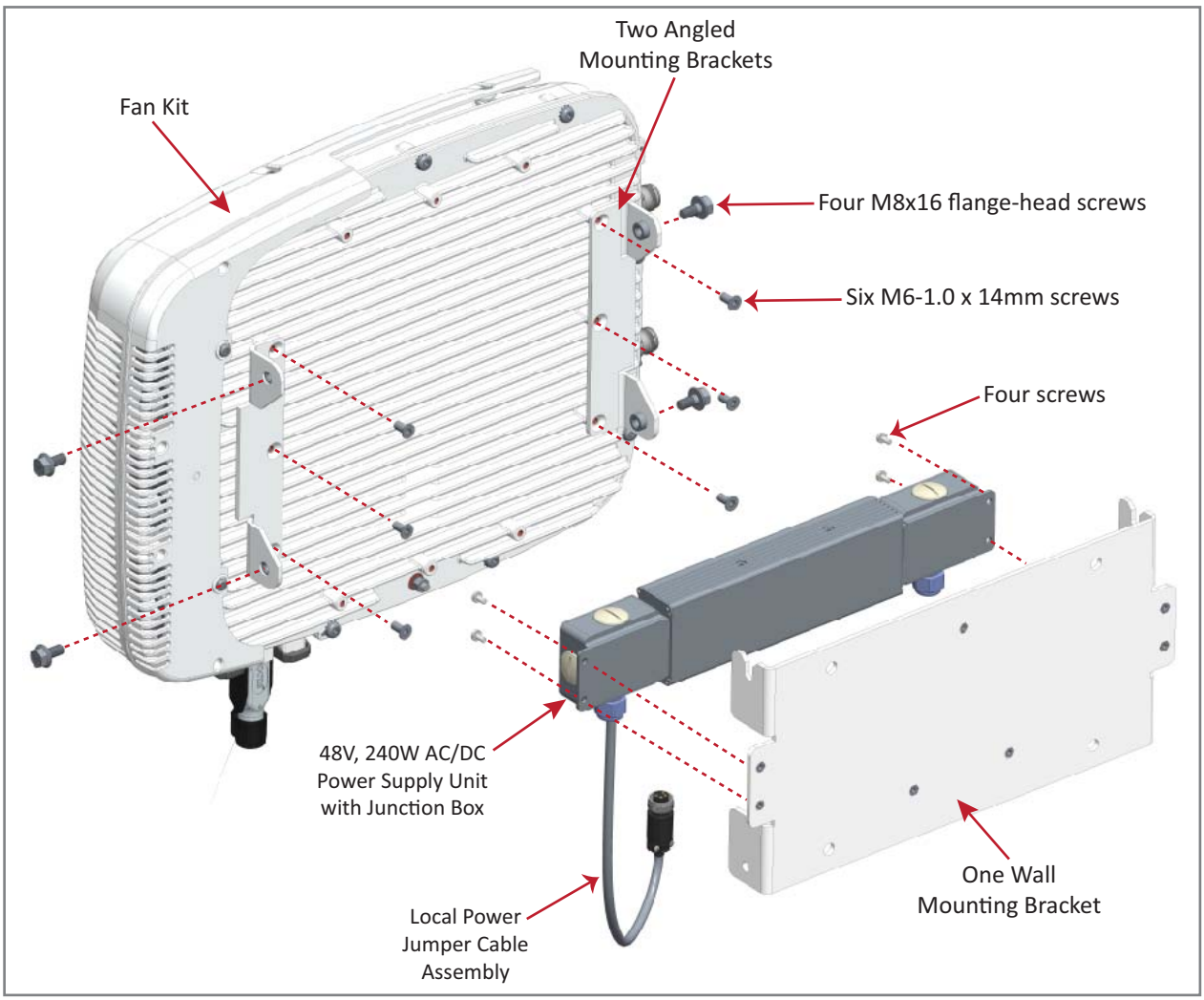

Figure 7-12. CAP L with Fan Kit and with 240W AC/DC Power Supply Kit

8 Follow the steps in "(Optional) Ground the CAP L" on page 110 if grounding is required in your locality or if you prefer to ground the CAP L.

© June 2017 CommScope, Inc.

Ceiling Mount a CAP L

Only a CAP L with a Fan Kit can be ceiling mounted. Do not ceiling mount a CAP L that does not have a Fan Kit attached to it.

1 Follow the steps in "Unpack and Inspect the CAP L and Optional Accessories" on page 96.

2 Refer to and observe all cautions listed in "Mounting Cautions" on page 95.

3 Refer to "Determine the CAP L Mounting Site" on page 90 to determine the mounting location, which must be able to support the weight and dimensions of the CAP L.

4 Refer to the following graphic for spacing requirements.

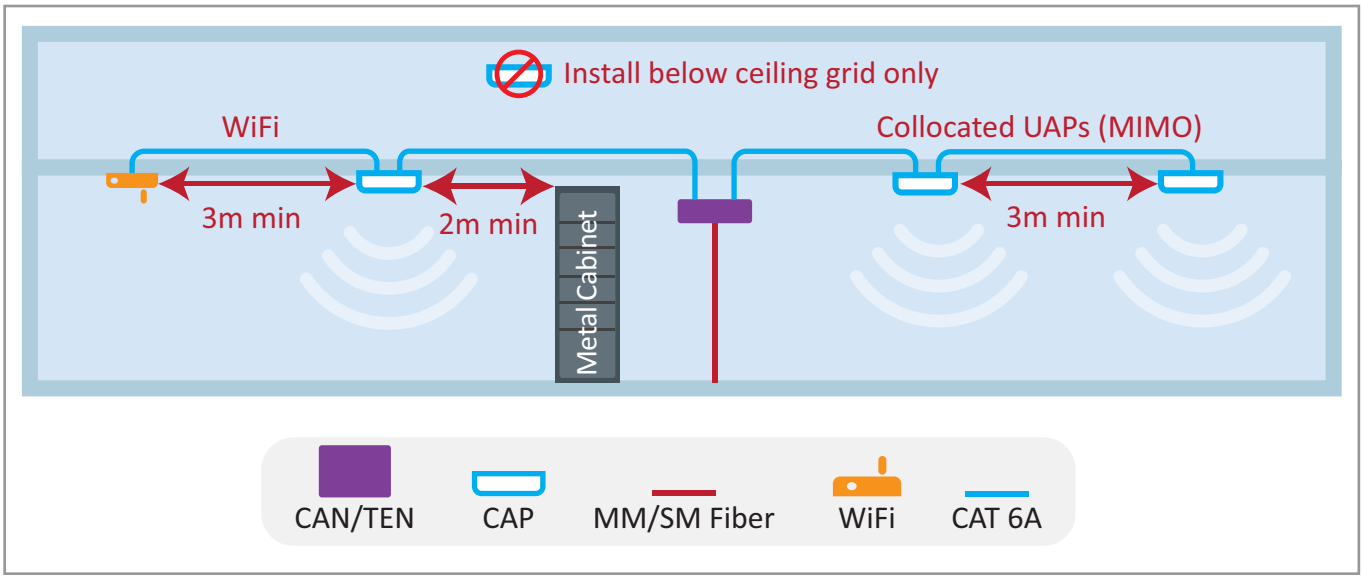

5 Follow the steps in one of the following sections that apply to securing the desired mounting bracket to the CAP L:

- "Wall Mount a CAP L Using a Flat Mounting Bracket Kit (PN 7774353-00)" on page 97
- "Wall Mount a CAP L Using a Power Supply / Hybrid Fiber Mounting Kit (PN 7774354-00)" on page 100
- "Wall Mount a CAP L Using a 240W AC/DC Power Supply Kit (PN 7775087-00)" on page 106

6 Use four 5/16-inch or M8 lag screws (or whatever screw type is appropriate for the material to which the CAP L is to mounted on) to mount the CAP L to the ceiling.

7 Follow the steps in "(Optional) Ground the CAP L" on page 110 if grounding is required in your locality or if you prefer to ground the CAP L.

© June 2017 CommScope, Inc.

(Optional) Ground the CAP L

Follow the steps below to ground the OPA only if grounding is required in your locality or if the installation plans require the CAP L be grounded. The different CAP L installation procedures will tell you when to ground the CAP L.

NOTE: **The CAP L is equipped with a green grounding screw located on the back of the unit; however, grounding is not necessary. CAP Ls are classified as low-voltage devices and do not have internal power supplies. CommScope recommends checking your local and national electrical codes to determine if grounding is a requirement.**

1. Obtain a length of #18 AWG (1.00 mm) insulated stranded copper wire for use as a chassis-grounding wire.
2. Terminate one end of the wire with a ring terminal.
3. Locate the chassis-ground stud at the rear of the CAP L enclosure.
4. Remove the Keps nut from the chassis-ground stud.
5. Attach the ring end of the wire to the chassis ground stud, as shown below.
6. Use the Keps nut removed in Step 4 to secure the ground wire to the chassis-ground stud.
7. Route the free end of the chassis grounding wire to an approved (per local code or practice) earth ground source.

© June 2017 CommScope, Inc.

Connect the CAP L Cables

The type of cables used and how the CAP L connects into the system is dependent on the CAP L type. Follow the cabling instructions that apply to the unit type that you are installing.

- "Cable a CAP L with an Optical Fiber Interface" on page 111
- "Cable a CAP L with a Copper Interface and Power over Category 6A Cable" on page 114
- "Cable a CAP L with a Copper Interface and Power over Ethernet" on page 116

Cable a CAP L with an Optical Fiber Interface

Figure 7-13 identifies the connectors on a CAP L with an Optical Fiber Interface; corresponding cables and connectors are shown.

CAUTION! Do not remove caps from any of the connectors until instructed to do so.

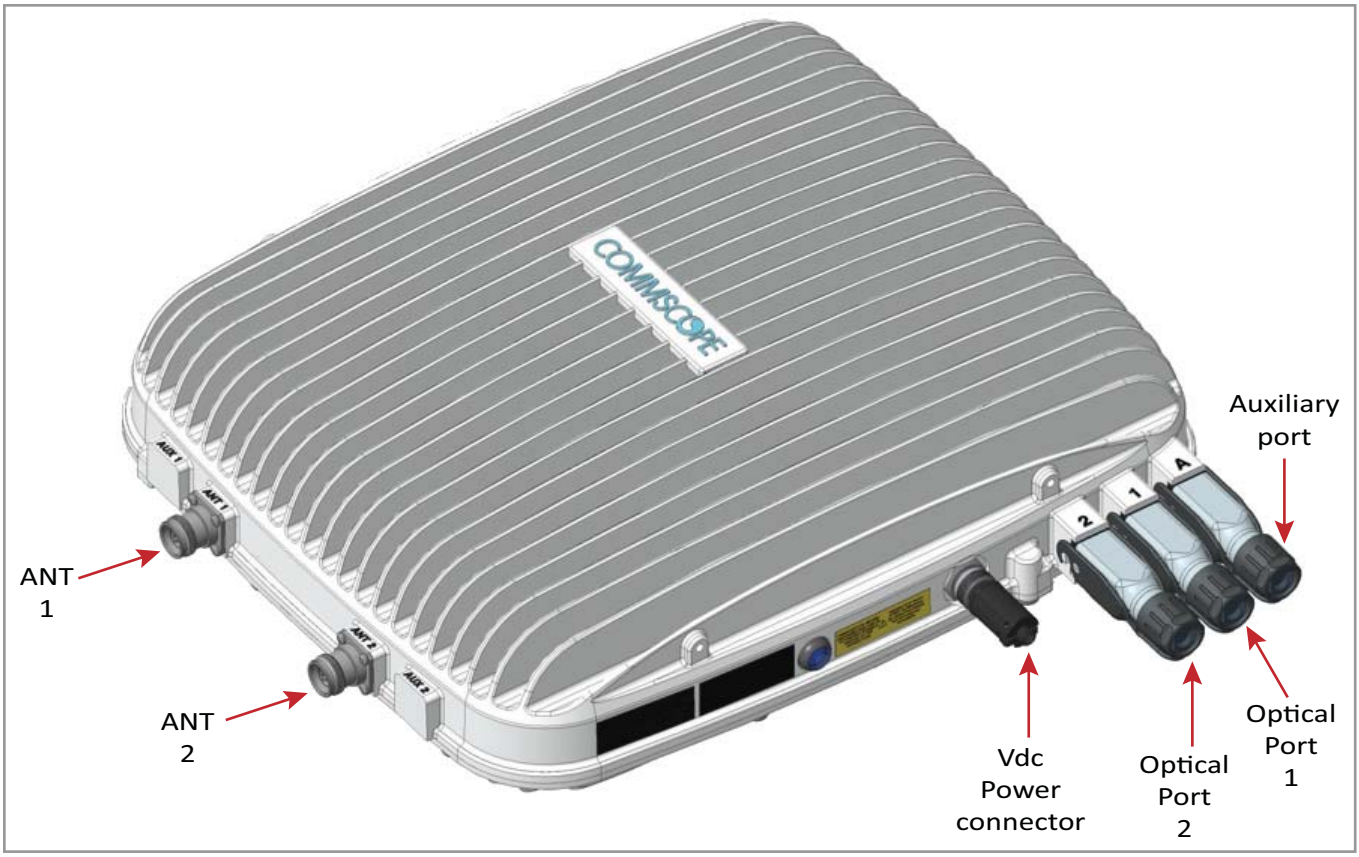

Figure 7-13. Connectors on a CAP L with an Optical Fiber Interface

1 Connect the CAP L ANT 1 and/or ANT 2 connector to a passive RF antenna.

   a Obtain 50Ω coaxial cables that are of sufficient length to reach from the CAP L to the passive antenna. The end of the 50Ω coaxial cable that will connect to the ANT connector can be either a push-pull connector or a threaded connector.

   b Install the passive antennas according to the manufacturer's installation instructions. If connecting both ANT connectors, you will connect the CAP L to either two separate external passive antennas or to two ports on a cross-polarized dual antenna. Each connector supports two RF bands (see Table 7-9).

Table 7-9. *Mapping Frequency Bands to Antennas*

Frequency Band	Band Combination	Antenna Port
AWS1700 / LTE2300	17E and 23	1
AWS1700 / LTE2300	17E and 23	2
GSM1800 / UMTS2100 / LTE2600	18 and 26	1
GSM1800 / UMTS2100 / LTE2600	21 and 26	2
AWS1700 / PCS1900	17E and 19	1
AWS1700 / PCS1900	17E and 19	2

   c **Is there a dust cap on ANT 1/2 that needs to be removed?**

   d Connect the passive multi-band antenna to the ANT 1 or ANT 2 connector using coaxial cable with the least amount of loss possible.

      - If the 50Ω coaxial cable has a push-pull connector, make sure the cable is seated firmly in the ANT 1 or ANT 2 connector.
      - If the 50Ω coaxial cable has a threaded connector, torque the connector 5 N-m (3.69 ft-lb). Do not over-tighten the connector.

   e Connect the other end of the 50Ω coaxial cable to the passive antenna installed in Step b on page 112.

2 If necessary, repeat Step 1 on page 112 to connect a 50Ω coaxial cable to the other ANT connector.

3 Connect the Optical Port 1 connector as appropriate for this installation.

   a Obtain Single Mode Fiber (SMF) or Multi Mode Fiber (MMF) that is of sufficient length to reach from the CAP L to the ION-E CAN/TEN. [**when would you use SM vs. MM?**]

   b Remove the dust cap from the Optical Port 1 connector and the connectors on the SM or MM fiber.

   c Follow the local cleaning technique to clean Optical Port 1.

   d Clean the connectors on the SMF or MMF following the fiber supplier's recommendations.

   e Connect one end of the SMF or MMF to the Optical Port 1 connector and the other end to [**to what EXACTLY does the other end of the cable connect on the CAN/TEN or junction box**?]

UNRESOLVED: **If Opt 1 can connect to the ION-E CAN/TEN or to a local Hybrid Fiber Junction Box to provide the main signal and power interface, when does optical transport occur over Single Mode (SM) or Multi Mode (MM) fiber? We need to identify what type of cable to use, and does the customer supply the cable or does it ship with the CAP L?**

© June 2017 CommScope, Inc.

4 If appropriate for this installation, connect the Optical Port 2 connector.
   - **a** Raise the lever on the EMI/IP67 cap on Optical Port 2 connector and remove the cap.
   - **b** Remove the caps from the connectors on the SM or MM fiber.
   - **c** Follow the local cleaning technique to clean Optical Port 2.
   - **d** Clean the connectors on the SMF or MMF following the fiber supplier's recommendations.
   - **e** Connect one end of the SMF or MMF to the Optical Port 2 connector and the other end to [**to what EXACTLY does the other end of the cable connect on the CAN/TEN or junction box**?]

UNRESOLVED: **If Opt 2 can connect to a local Hybrid Fiber Junction Box or a cascaded CAP L to provide the main signal and power interface, when does optical transport occur over Single Mode (SM) or Multi Mode (MM) fiber? We need to identify what type of cable to use, and does the customer supply the cable or does it ship with the CAP L?**

5 Connect the Auxiliary connector as appropriate for this installation.
   - **a** Raise the lever on the EMI/IP67 cap on the Auxiliary connector and remove the cap.

UNRESOLVED: **AUX port can connect to external Ethernet devices such as WiFi and IP cameras. What type of cable do you use for each? Cabling is via the appropriate CAT cable for the protocol; this model supports an 1000 BASE-T and 802.3at Class 3 PoE (minimum) Ethernet connection. We need to identify what type of cable to use, and does the customer supply the cable or does it ship with the CAP L?**

UNRESOLVED: **Verify that maximum attached cable length is 3 meters (9.8 feet).**

UNRESOLVED: **To what does the other end of the cable connect to on external Ethernet devices such as WiFi and IP cameras?**

6 Connect the Vdc Power connector as appropriate for this installation.
   - **a** Find the Local Power Jumper Cable Assembly that was shipped with the mounting kit.
   - **b** Connect the four-pin connector to the Vdc Power connector on the CAP L.

UNRESOLVED: **Spec stated that this model can connect to a local or external power supply, or to a Hybrid Fiber Junction Box, is the power cable the same for all three options? For each option, to what does the power cable connect?**

The CAP L is powered on as soon as you connect the Local Power Jumper Cable Assembly to a power source; see "Powering a CAP L" on page 82.

Cable a CAP L with a Copper Interface and Power over Category 6A Cable

Figure 7-14 identifies the connectors on a CAP L with a Copper Interface that is powered over Category 6A cable; corresponding cables and connectors are shown.

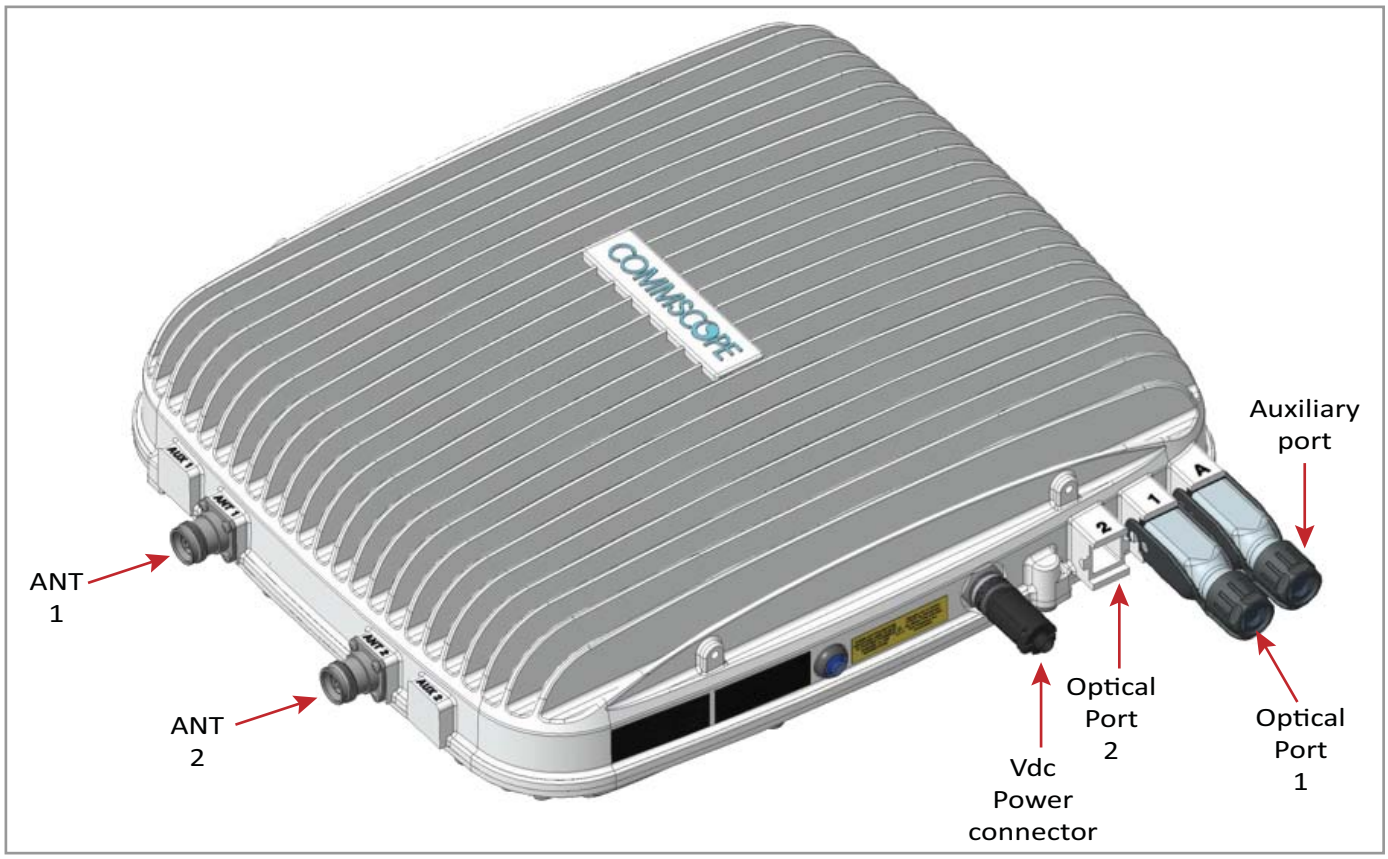

Figure 7-14. Connectors on a CAP L with a Copper Interface Powered over Category 6A Cable

1 Connect the CAP L ANT 1 and/or ANT 2 connector to a passive RF antenna.

   a Obtain 50Ω coaxial cables that are of sufficient length to reach from the CAP L to the passive antenna. The end of the 50Ω coaxial cable that will connect to the ANT connector can be either a push-pull connector or a threaded connector.

   b Install the passive antennas according to the manufacturer's installation instructions. If connecting both ANT connectors, you will connect the CAP L to either two separate external passive antennas or to two ports on a cross-polarized dual antenna. Each connector supports two RF bands (see Table 7-2 on page 77).

   c **Is there a dust cap on ANT 1/2 that needs to be removed?**

   d Connect the passive multi-band antenna to the ANT 1 or ANT 2 connector using coaxial cable with the least amount of loss possible.

      - If the 50Ω coaxial cable has a push-pull connector, make sure the cable is seated firmly in the ANT 1 or ANT 2 connector.
      - If the 50Ω coaxial cable has a threaded connector, torque the connector 5 N-m (3.69 ft-lb). Do not over-tighten the connector.

   e Connect the other end of the 50Ω coaxial cable to the passive antenna installed in Step b on page 114.

2 If necessary, repeat Step 1 on page 114 to connect a 50Ω coaxial cable to the other ANT connector.

© June 2017 CommScope, Inc.

3 Connect the Optical Port 1 connector as appropriate for this installation.

- **a** Obtain Single Mode Fiber (SMF) or Multi Mode Fiber (MMF) that is of sufficient length to reach from the CAP L to the ION-E CAN/TEN. [**when would you use SM vs. MM?**]
- **b** Remove the dust cap from the Optical Port 1 connector and the connectors on the SM or MM fiber.
- **c** Follow the local cleaning technique to clean Optical Port 1.
- **d** Clean the connectors on the SMF or MMF following the fiber supplier's recommendations.
- **e** Connect one end of the SMF or MMF to the Optical Port 1 connector and the other end to [**to what EXACTLY does the other end of the cable connect on the CAN/TEN or junction box**?]

UNRESOLVED: **Opt 1 connects to the ION-E CAN/TEN to provide the main signal and power interface. We need to identify what type of cable to use, and does the customer supply the cable or does it ship with the CAP L?**

NOTE: **The Optical Port 2 connector is plugged as it is not used in this configuration.**

4 Connect the Auxiliary connector as appropriate for this installation.

- **a** Raise the lever on the EMI/IP67 cap on the Auxiliary connector and remove the cap.

UNRESOLVED: **The AUX port provides a cascade connection to additional local power or CAP L, or provides a connection to external Ethernet devices such as WiFi and IP cameras. Spec stated that cabling is via the appropriate CAT cable for installed unit protocol—what cable type(s) are supported for each unit type to which it can connect?**

UNRESOLVED: **Verify that maximum attached cable length is 3 meters (9.8 feet).**

UNRESOLVED: **To what does the other end of the cable connect to on external Ethernet devices such as WiFi and IP cameras?**

5 Connect the Vdc Power connector as appropriate for this installation.

- **a** Find the Local Power Jumper Cable Assembly that was shipped with the mounting kit.
- **b** Connect the four-pin connector to the Vdc Power connector on the CAP L.

The CAP L is powered on as soon as you connect the Local Power Jumper Cable Assembly to a power source; see "Powering a CAP L" on page 82.

UNRESOLVED: **Spec stated that this model can connect to a local or external power supply, for each option, to what does the power cable connect?**

Cable a CAP L with a Copper Interface and Power over Ethernet

Figure 7-15 identifies the connectors on a CAP L with an Optical Fiber Interface; corresponding cables and connectors are shown.

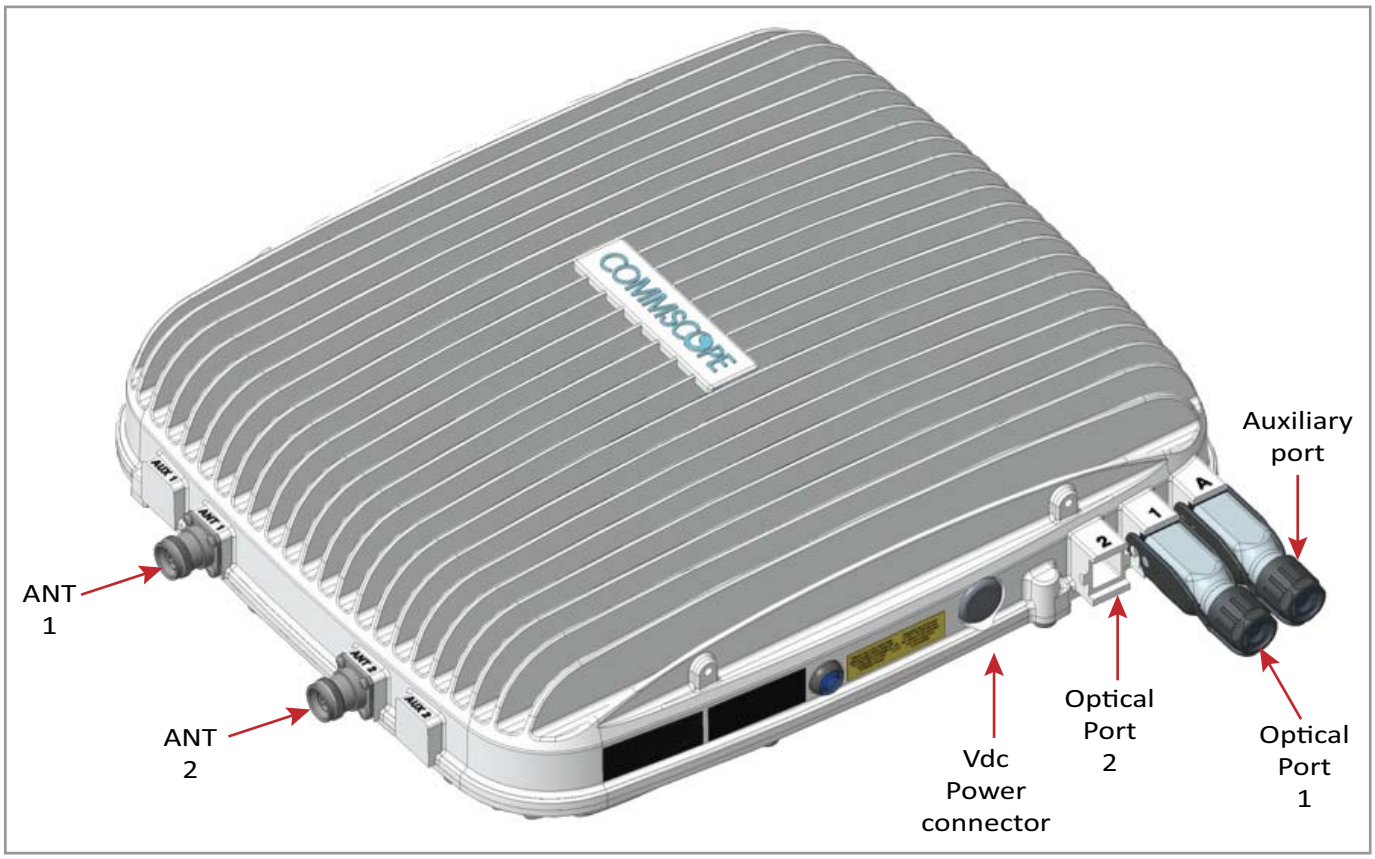

Figure 7-15. Connectors on a CAP L with a Copper Interface

1 Connect the CAP L ANT 1 and/or ANT 2 connector to a passive RF antenna.

   a Obtain 50Ω coaxial cables that are of sufficient length to reach from the CAP L to the passive antenna. The end of the 50Ω coaxial cable that will connect to the ANT connector can be either a push-pull connector or a threaded connector.

   b Install the passive antennas according to the manufacturer's installation instructions. If connecting both ANT connectors, you will connect the CAP L to either two separate external passive antennas or to two ports on a cross-polarized dual antenna. Each connector supports two RF bands (see Table 7-2 on page 77).

   c **Is there a dust cap on ANT 1/2 that needs to be removed?**

   d Connect the passive multi-band antenna to the ANT 1 or ANT 2 connector using coaxial cable with the least amount of loss possible.

      - If the 50Ω coaxial cable has a push-pull connector, make sure the cable is seated firmly in the ANT 1 or ANT 2 connector.
      - If the 50Ω coaxial cable has a threaded connector, torque the connector 5 N-m (3.69 ft-lb). Do not over-tighten the connector.

   e Connect the other end of the 50Ω coaxial cable to the passive antenna installed in Step b on page 116.

2 If necessary, repeat Step 1 on page 116 to connect a 50Ω coaxial cable to the other ANT connector.

© June 2017 CommScope, Inc.

NOTE: **The Power connector and the Optical Port 2 connector are plugged as they are not used in this configuration.**

3 Use CAT6A cable to connect the Optical Port 1 connector to the PoE.

UNRESOLVED: **Not really sure what "to the PoE" means.**

UNRESOLVED: **To what does the other end of the CAT6A cable connect?**

4 Connect the Auxiliary connector as appropriate for this installation.

UNRESOLVED: **Is the AUX connector capped during shipment? If yes, state to remove dust cap? If tool required, need to know what that tool is.**

UNRESOLVED: **The AUX port provides a connection to external Ethernet devices such as WiFi and IP cameras. Spec stated that cabling is via the appropriate CAT cable for installed unit protocol—what cable type(s) are supported for each unit type to which it can connect?**

UNRESOLVED: **Verify that maximum attached cable length is 3 meters (9.8 feet).**

UNRESOLVED: **To what does the other end of the cable connect to on external Ethernet devices such as WiFi and IP cameras?**

© June 2017 CommScope, Inc.

Cascading CAP Ls

A second CAP L can be cascaded from a primary CAP L (the CAP L connected directly to the CAN/TEN). Limitations for cascaded CAP Ls are listed below.

- There can be only two CAP Ls in a cascade.
- The cascaded unit must use the same transport type (Copper or Optical).
- The cascaded CAP L must get its power through the DC connector (either from a local supply or hybrid fiber); power over the CAT cable to the cascaded unit is not supported.
- Use of the AUX ports in a cascaded system is limited as follows:
  - For Copper, use only the AUX port on the cascaded CAP L.
  - For Optical, use only one of the AUX ports, which can be on either the primary or cascaded CAP L.
- The total 320MHz RF bandwidth is shared between the two cascaded units, but can be shared unevenly; that is, with more bandwidth going to either the primary or cascaded CAP L.
- After the primary CAP L powers up, the secondary CAP L will be discovered and power up on its own; for information on how a CAP L powers up, see "Powering a CAP L" on page 82.

© June 2017 CommScope, Inc.

CAP L Maintenance

The following sections tell you how to remove a CAP L from mounting brackets, and provides preventative maintenance.

Remove a CAP L from a Ceiling Mount

Should you need to remove the CAP L from the ceiling mount, do the following:

1 While holding the CAP L with both hands, press both release slides inward towards the CAP L.

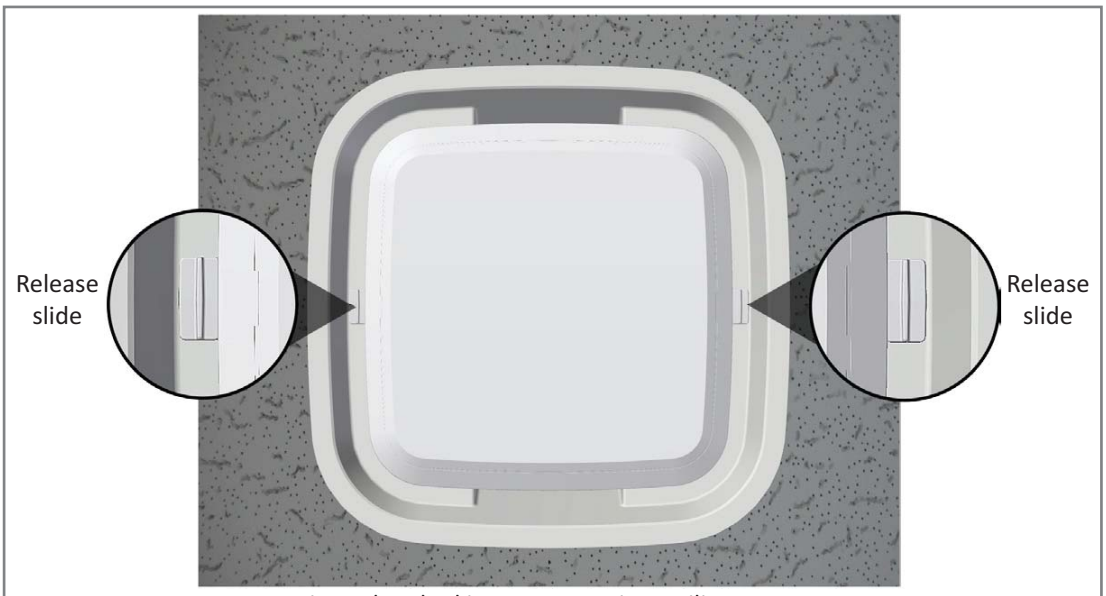

View when looking up at UAP in a ceiling mount

2 Press the red power switch button on the CAP L to shut it down. The red button must be pressed BEFORE disconnecting the Cat6A cables. The blue LED will turn off when the unit shuts down. The CAP L may also be shutdown via software prior to disconnecting the cables.

3 Unplug the CAP L cables.

4 If a ground wire is installed, loosen the grounding screw and remove the ground wire.

Remove a CAP L from a Wall Mount

Should you need to remove the CAP L from the wall mount, do the following:

1 While securely supporting the CAP L, press both releases inward towards the CAP L.

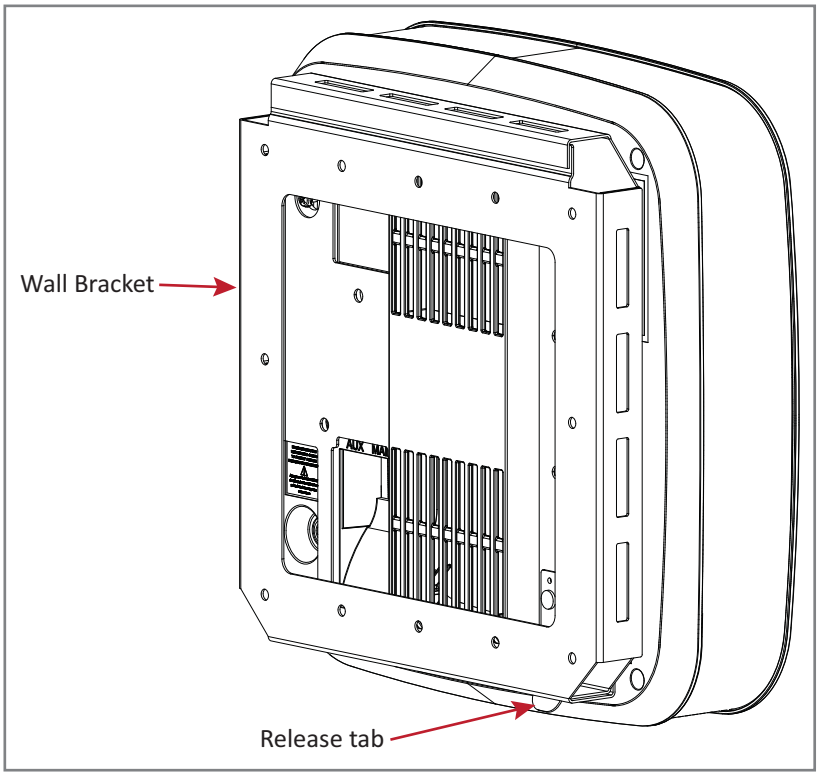

2 Press the red power switch button on the CAP L to shut it down. The red button must be pressed BEFORE disconnecting the Cat6A cables. The blue LED will turn off when the unit shuts down. The CAP L may also be shutdown via software prior to disconnecting the cables.

3 Unplug the CAP L cables.

4 If a ground wire is installed, loosen the grounding screw and remove the ground wire.

© June 2017 CommScope, Inc.

Preventative CAP L Maintenance

The CAP L does not require preventative maintenance measures. However, checking the cleanliness of the unit and its components—particularly the heat sink/fans—at regularly-scheduled intervals is recommended. Avoid applying too much pressure when using a vacuum or other method, as this can damage the fan bearings and shorten the lifespan of the fans.

You will need to remove the CAP L from its mounting to access the fans its bottom; see "Remove a CAP L from a Ceiling Mount" on page 119.

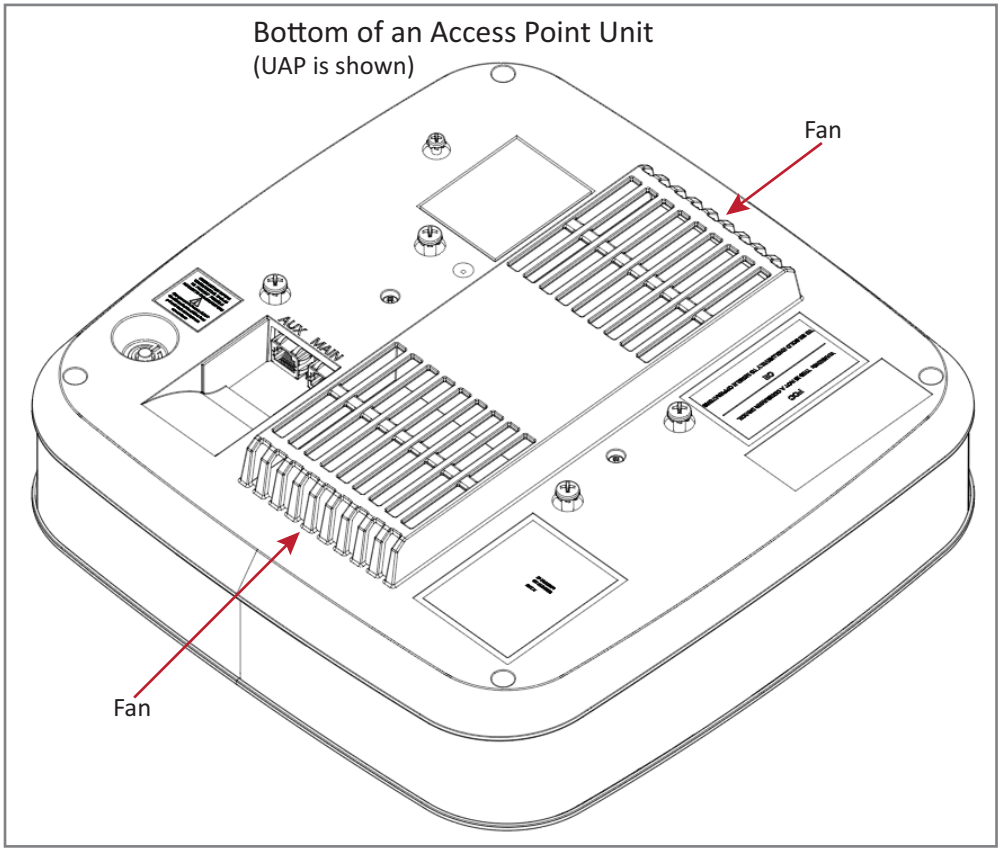

CAP L Specifications

CAP L Output Specifications

UNRESOLVED: **The information in this section is lifted from UAP - I do not know how much actually applies to the CAP L**

Nominal passband gain per band: Le gain nominal en bande passante	
Rated mean output power per band 380 MHz - 512 MHz La puissance moyenne de sortie par bande 380 MHz - 512 MHz	
Rated mean output power per band >608 MHz La puissance moyenne de sortie par bande >608 MHz	+18 dBm
Maximum combined mean power in mid bands 608-1000 MHz Puissance moy-enne combinée maximale dans les bandes moyennes 608-1000 MHz	+21 dBm
Maximum combined mean power in high bands 1395-2700 MHz Puissance moy-enne combinée maximale dans les bandes moyennes 1395-2700 MHz	+21 dBm
Input / Output Impedance Les impédances d'entrée et de sortie, et	

The Manufacturer's rated output power for this equipment is the composite power in a band. For situations when multiple carrier signals are present, the power per carrier is reduced. For example, two carriers in a band will each have 3 dB less power than a single carrier in a band. This is important where the output signal is radiated and can cause interference to adjacent band users. This power reduction is to be by means of gain reduction and not by an attenuator at the output of the device.

La puissance de sortie nominale du fabricant pour cet équipement est la puissance composite dans une bande. Pour les situations où plusieurs porteuses sont présentes, la puissance par porteuse est réduite. Par exemple, deux porteuses d'une bande auront chacun 3 dB de puissance inférieure à celle d'une seule porteuse dans une bande. Ceci est important lorsque le signal de sortie est rayonné et peut causer des interférences aux utilisateurs de bandes adjacentes. Cette réduction de puissance doit être réalisée par réduction de gain et non par un atténuateur en sortie du dispositif.

© June 2017 CommScope, Inc.

CAP L Bandwidth Specifications

UNRESOLVED: **The information in this section is lifted from UAP - I do not know how much actually applies to the CAP L**

ION-E supports a variety of bands in the 380 to 2700 MHz range. The frequencies and bandwidths listed in the following table, for example, represent the nominal bandwidth specifications for Canada in the North America region.

MHz	MHz	Nominal bandwidth (MHz) La largeur de bande nominale
406.1	430	24
450	470	20
728	746	18
746	756	10
768	776	8
851	869	18
869	894	25
1930	1995	65
2110	2155	45
2620	2690	70

© June 2017 CommScope, Inc.

© June 2017 CommScope, Inc.

DCCS Global Technical Support

8

Chapter Topics **Page**

Contacting DCCS Global Technical Support 126
Telephone Helplines 126
Online Support 126
DCCS Technical Training 127
Accessing ION-E Series User Documentation 128
Hardware to Software Mapping Information 129

This chapter tells you how to contact the CommScope Distributed Coverage and Capacity Solutions (DCCS) Technical Support, find out what ION-E training classes are offered, how to access the ION-E user documentation, and how to map supported ION-E software releases to ION-E hardware.

© June 2017 CommScope, Inc.

Contacting DCCS Global Technical Support

The following sections tell you how to contact the CommScope Distributed Coverage and Capacity Solutions (DCCS) Technical Support team. Support is available 7 days a week, 24 hours a day.

Telephone Helplines

Use the following Helpline telephone numbers to get live support, 24 hours a day:

24x7	+1 888-297-6433 (Toll free for U.S. and Canada)
EMEA 8:00-17:00 (UTC +1)	+ 800 73732837 (Toll free for parts of EMEA and Australia)
	+ 49 909969333 (Toll charge incurred)
	Calls to an EMEA Helpline outside of the 8:00 to 17:00 time frame will be forwarded to the 24x7 Helpline.

Online Support

To go to the CommScope DCCS Support Request web site from which you can initiate a Technical Support ticket, do one of the following:

- Scan the QR Code to the right.
- If viewing this document online as a PDF, click on the following URL link:

  http://www.commscope.com/wisupport
- Enter the preceding URL into your web browser, and then press **ENTER** on your keyboard.

© June 2017 CommScope, Inc.

DCCS Technical Training

1. To access training on the online CommScope DAS and Small Cell Institute, do one of the following:
   - Scan the QR Code to the right.
   - If viewing this document online as a PDF, click on the following URL link.

     http://www.commscopetraining.com/courses/dassc/
   - Enter the preceding URL into your web browser, and then press **ENTER** on your keyboard.
2. Review the courses listed in separate course panels; for further information on a course, click its **Full details** button. Instructor-led courses are conducted in North America and Europe. Before choosing a course, please verify the region.
3. To view the course schedule and register, click **Course Registration** at the top of the course page; this opens the **Partner Learning Center Login** page.
   - If you have an account, enter your **Username** and **Password**, and then click **Login**. (Click on the **Reset Password** link if you do not have your login information.)
   - If you don't have an account, click on the **Create New User Account** link under the **Login** button, and follow the prompts.

   Once you have logged in, you will see a list of available class dates.
4. Click the date you prefer and select the **Enroll** or **Register Now** button to enroll. Follow the prompts through the payment process.
5. Click either the **Available Training** or **Calendar** tab to view other training courses.

For training related questions, please contact the CommScope DAS and Small Cell Institute at one of the following emails, as appropriate for your location:

Americas: DASTrainingUS@CommScope.com

EMEA: DASTrainingEMEA@CommScope.com

Accessing ION-E Series User Documentation

1. Scan the QR Code to the right to go directly to the CommScope DCCS Customer Portal, where you can access the DCCS user documentation.

   Alternatively, you can go to the following web address to access the portal:

   https://www.mycommscope.com

2. Access to the Customer Portal requires a user account and password. On the Sign In page, do one of the following:
   - If you have an account, enter your Email address and Password, and then click Sign In.
   - If you don't have an account, click New user registration, and follow the prompts.
3. Click DCCS to open the site.
4. Select your site, and then click on a product link to open the product page.
5. Click on the title of any document to open it.

© June 2017 CommScope, Inc.

Hardware to Software Mapping Information

1. Scan the QR Code to the right to view or download the minimum software requirements for each of the DCCS hardware modules. Alternatively, you can go to the following web address to access the portal:

   http://www.commscope.com/collateral/DCCS_HW_SW_Mapping/

2. Click on a document link to open it or right click on the link and select the Save target as… option from the contextual menu.

© June 2017 CommScope, Inc.

COMMSCOPE®