# ECL-EMC Test Report No.: 14-202

**Equipment under test:** **TFAH-ES70/80** **700MHz Path**
**FCC ID:** **XS5-TFAHES78**

**Type of test:** **FCC 47 CFR Part 90 Subpart R: 2014**
Private Land Mobile Repeater

**Measurement Procedures:** 47 CFR Parts 2:2014 (*Frequency Allocations and Radio Treaty Matters; General Rules and Regulations*),
Part 90:2014 (Private Land Mobile),
ANSI/TIA-603-C (2004), *Land Mobile FM or PM Communications Equipment Measurement and Performance Standards*

**Test result:** **Passed**

| | | | | |
|---|---|---|---|---|
| Date of issue: | 03.11.14 | | | Signature: |
| Issue-No.: | 01 | Author: | **Tom Zahlmann**<br>Test engineer | Digitally signed by Tom Zahlmann<br>DN: cn=Tom Zahlmann, o=Bureau Veritas CPS, ou=ECL, email=tom.zahlmann@de.bureauveritas.com, c=DE<br>Date: 2014.11.03 15:35:48 +01'00' |
| Date of delivery: | 11.08.14 | Checked: | **Frank Tomandl**<br>Project manager EMC | Digital unterschrieben von Frank Tomandl<br>DN: cn=Frank Tomandl, o=Bureau Veritas CPS, ou=ECL, email=frank.tomandl@de.bureauveritas.com, c=DE<br>Datum: 2014.11.03 16:30:43 +01'00' |
| Test dates: | 17.02. – 12.08.14 | | | |
| Pages: | 39 | | | |

The test report shall not be reproduced except in full without the written approval of the testing laboratory.

**Manufacturer:** ANDREW Wireless Systems GmbH
Industriering 10

D-86675 Buchdorf

Tel.: +49 (0)9099 69 0
Fax: +49 (0)9099 69 140

**Test Location:** Bureau Veritas Consumer Products Services
Germany GmbH
European Compliance Laboratory (ECL)
Thurn-und-Taxis-Straße 18
D-90411 Nürnberg
Tel.: +49 40 74041 0
Fax: +49 40 74041-2755

**General:**
The purpose of this report is to show compliance to the FCC regulations for licensed devices operating under section 90 of the Code of Federal Regulations title 47.
This report informs about the results of the RF tests, it only refers to the equipment under test. No part of this report may be reproduced in any form, without written permission.

# Table of contents

1 TEST RESULTS SUMMARY ..... 5

2 EQUIPMENT UNDER TEST (E.U.T.) ..... 6

2.1 DESCRIPTION ..... 6
2.1.1 DOWNLINK ..... 6
2.1.2 UPLINK ..... 6
2.1.3 DESCRIPTION OF EUT ..... 6
2.1.4 BLOCK DIAGRAM OF MEASUREMENT REFERENCE POINTS ..... 7
2.1.5 DOWNLINK SYSTEM GAIN AND OUTPUT POWER ..... 7

3 TEST SITE (ANDREW BUCHDORF) ..... 8

3.1 TEST ENVIRONMENT ..... 8

3.2 TEST EQUIPMENT ..... 8

3.3 INPUT AND OUTPUT LOSSES ..... 9

3.4 MEASUREMENT UNCERTAINTY ..... 9

4 TEST SITE (BUREAU VERITAS CONSUMER PRODUCTS SERVICES) ..... 9

5 RF POWER OUT: §90.635, §2.1046 ..... 10

5.1 LIMIT ..... 10

5.2 TEST METHOD ..... 10

5.3 TEST RESULTS ..... 11
5.3.1 DOWNLINK ..... 12
5.3.1.1 Analog ..... 13
5.3.1.2 APCO Phase1 C4FM ..... 13
5.3.1.3 APCO Phase2 H-DQPSK ..... 14
5.3.2 UPLINK ..... 14

5.4 SUMMARY TEST RESULT ..... 14

6 OCCUPIED BANDWIDTH: §2.1049 ..... 15

6.1 LIMIT ..... 15

6.2 TEST METHOD ..... 15

6.3 TEST RESULTS ..... 15
6.3.1 DOWNLINK ..... 15
6.3.1.1 Analog ..... 16

7 SPURIOUS EMISSIONS AT ANTENNA TERMINALS: §90.543, §2.1051 ..... 20

7.1 LIMIT ..... 20

7.2 TEST METHOD ..... 20
7.2.1 FCC CFR47 ..... 20

7.3 TEST RESULTS ..... 21
7.3.1 DOWNLINK ..... 21
7.3.1.1 Analog < 1MHz to band edge ..... 22

8 OUT OF BAND REJECTION ..... 27

8.1 LIMIT ..... 27

8.2 TEST METHOD ..... 27

8.3 TEST RESULTS ..... 27
8.3.1 DOWNLINK ..... 28
8.3.2 UPLINK ..... 28

8.4 SUMMARY TEST RESULT ..... 28

9 NOISE FLOOR ..... 29

10 RADIATED SPURIOUS EMISSIONS AT THE ECL (BUREAU VERITAS): §90.543, §2.1053 ..... 30

10.1 METHOD OF MEASUREMENT ..... 33

10.2 LIMIT ..... 34

10.3 CLIMATIC VALUES IN THE LAB ..... 34

10.4 TEST RESULTS ..... 35
10.4.1 30 MHZ TO 1 GHZ DOWNLINK (BOTTOM – MIDDLE – TOP) SUBPART H ..... 35
10.4.3 30 MHZ TO 1 GHZ DOWNLINK (MIDDLE OF ALL PATHS) ..... 36
10.4.4 1 GHZ TO 21 GHZ DOWNLINK (BOTTOM – MIDDLE – TOP) SUBPART H ..... 37
10.4.6 1 GHZ TO 22 GHZ DOWNLINK (MIDDLE OF ALL PATHS) ..... 38

11 HISTORY ..... 39

# 1 Test Results Summary

| Name of Test | FCC Para. No. | FCC Method | FCC Spec. | Result |
|---|---|---|---|---|
| RF Power Output | 90.635 | 2.1046 | 1000 Watts | Complies |
| Occupied Bandwidth | 90.210 | 2.1049 | Input/Output | Complies |
| Spurious Emissions at Antenna Terminals | 90.543 | 2.1051 | -13dBm | Complies |
| Radiated Spurious emission | 90.543 | 2.1053 | -25dBm | Complies |
| Frequency Stability | 90.539 | 2.1055 | 1 ppm | NA |
| Out of Band Rejection | KDB 935210 D02 v02 | KDB 935210 D02 v02 | KDB 935210 D02 v02 | Complies |
| Noise floor | KDB 935210 D02 v02 | KDB 935210 D02 v02 | KDB 935210 D02 v02 | Complies |

Frequency stability is given by: The system gets an electrical analog signal from the BSS which is converted into an analog optical signal, transmitted by the optical links and then reconverted in the Remote Unit into an analog electrical signal. During this process happens no frequency change/modification, so input and output have same frequency what can be seen under capture “Occupied Bandwith”.

# 2 Equipment under test (E.U.T.)

## 2.1 Description

| | |
|---|---|
| Kind of equipment | TFAH-ES70/80 |
| Andrew ID-Nr. | Id. No. TFAH-ES70/80 |
| Serial no.(SN) | 10 |
| Revision | 00 |
| Software version and ID | n. a. |
| Type of modulation and Designator | F3E (Voice) ☒<br>C4FM (D7W) ☒<br>H-DQPSK (D1W) ☒ |
| Frequency Translation | F1-F1 ☒<br>F1-F2 ☐<br>N/A ☐ |
| Band Selection | Software ☐<br>Duplexer ☒<br>Full band ☐ |

### 2.1.1 Downlink

| | |
|---|---|
| Full pass band | 758 MHz – 775 MHz |
| Pass band under test | 769 MHz – 775 MHz |
| Max. composite output power based on one carrier (rated) | 31 dBm = 1.26 W |
| Gain* | 32 dB |

*see 2.1.5

### 2.1.2 Uplink

| | |
|---|---|
| Pass band | n. a. |
| Gain* | n. a. |

*see 2.1.5

Note: The EUT does not transmit over the air in the uplink direction.

### 2.1.3 Description of EUT

TFAH-ES70/80 is a multi-band, multi-operator remote unit configuration used in conjunction with a master unit in the ION optical distribution system. This system transports up to two frequency bands simultaneously (700 MHz and 800MHz), providing a cost-effective solution for distributing capacity from one or more base stations.

This Test Report describes only the approval of the 700 MHz path (769 – 775 MHz)

### 2.1.4 Block diagram of measurement reference points

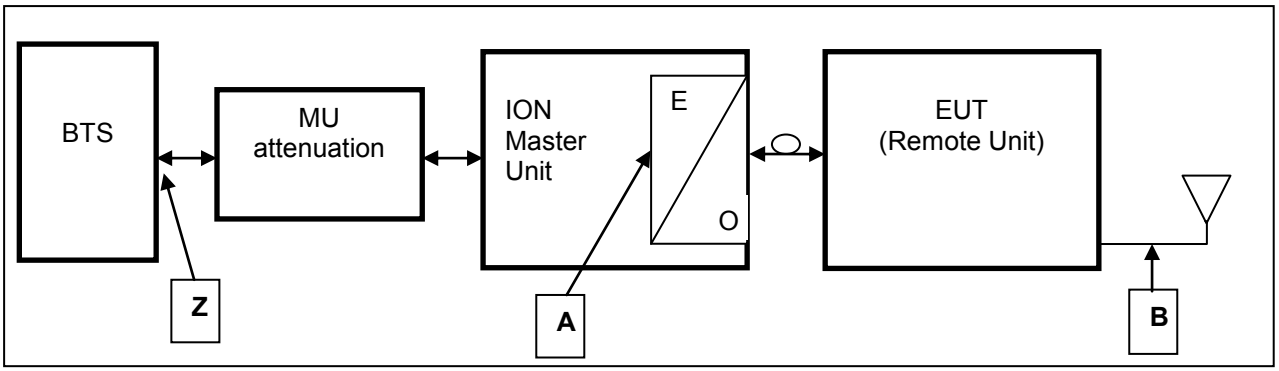


figure 2.1.4-#1 Block diagram of measurement reference points

Remote Unit is the EUT

| | |
|---|---|
| O/E | Optical / Electrical converter |
| SRMU | Sub Rack Master Unit |

| | | | |
|---|---|---|---|
| Reference point A | SRMU | UL output, | DL input |
| Reference point B | Remote Unit | DL output, | UL input |
| Reference point Z | BTS | DL output, | UL input |

Downlink: Measure from reference point B to A

Since a signal generator does not supply a good output signal with +33 or +43dBm, for the downlink measurement the MU Attenuation is not used.
That means for downlink measurements the signal generator is connected to measurement point A at the master optical / electrical converter and the analyzer to the measurement point B at the RU.

### 2.1.5 Downlink System Gain and Output Power

| System optimized for BTS power<br><br>**Z** | MU Attenuation<br>*(manual leveling)* | Maximum rated input power at the MU OTRX<br><br>**B** | RU Gain<br><br>**B to A** | Maximum rated output power at RU Antenna port<br><br>**A** |
|---|---|---|---|---|
| **+33 dBm** | **34 dB** | **-1 dBm** | **+32 dB** | **+31.0 dBm**<br>*@ 1 carrier* |
| **System Gain Z to B** | **-2 dB** | | | |
| **+43 dBm** | **44 dB** | **-1 dBm** | **+32 dB** | **+31.0 dBm**<br>*@ 1 carrier* |
| **System Gain Z to B** | **-12 dB** | | | |

table 2.1.5-#1 Equipment under test (E.U.T.) Description Downlink System Gain and Output Power

# 3 Test site (Andrew Buchdorf)

## 3.1 Test environment

All tests were performed under the following environmental conditions:

| Condition | Minimum value | Maximum value |
|---|---|---|
| Barometric pressure | 86 kPa | 106 kPa |
| Temperature | 15°C | 30°C |
| Relative Humidity | 20 % | 75 % |
| Power supply range | ±5% of rated voltages | |

## 3.2 Test equipment

| ANDREW Inv. No. | Test equipment | Type | Manufacturer | Serial No. | Calibration |
|---|---|---|---|---|---|
| 9102 | Network Analyzer | ZVB14 | R&S | 100118 | 08/14 |
| 9054 | Spectrum Analyzer | FSV13 | R&S | 100859 | 12/14 |
| 9233 | Signal Generator | SMBV100A | R&S | 257777 | 06/15 |
| 8849 | Signal Generator | SMU200A | R&S | 101732 | 04/15 |
| 8671 | Power Meter | E4418B | Agilent | GB39513094 | 06/15 |
| 8672 | Power Sensor | E9300H | Agilent | US41090179 | 06/15 |
| 7306 | Circulator | C25E-1FFF | AEROTEK | 12580 | CIU |
| 7307 | Circulator | C25E-1FFF | AEROTEK | 12581 | CIU |
| 7408 | RF-Cable | 2,0m; N-N | Andrew | --- | CIU |
| 7409 | RF-Cable | 2,0m; N-N | Andrew | --- | CIU |
| 7410 | RF-Cable | 1,0m; N-N | Andrew | --- | CIU |
| 7411 | RF-Cable | 2,0m; N-N | Andrew | --- | CIU |
| 7373 | RF-Cable | Multiflex141 | Andrew | --- | CIU |
| 7374 | RF-Cable | Multiflex141 | Andrew | --- | CIU |
| 7437 | RF-Cable | Multiflex141 | Andrew | --- | CIU |
| 7438 | RF-Cable | Multiflex141 | Andrew | --- | CIU |
| 7439 | RF-Cable | Multiflex141 | Andrew | --- | CIU |
| 7443 | RF-Cable | Multiflex141 | Andrew | --- | CIU |
| 7444 | RF-Cable | Multiflex141 | Andrew | --- | CIU |
| 7445 | RF-Cable | Multiflex141 | Andrew | --- | CIU |
| 7446 | RF-Cable | Multiflex141 | Andrew | --- | CIU |
| 7447 | RF-Cable | Multiflex141 | Andrew | --- | CIU |
| 7448 | RF-Cable | Multiflex141 | Andrew | --- | CIU |
| 7449 | RF-Cable | Multiflex141 | Andrew | --- | CIU |
| 7450 | RF-Cable | Multiflex141 | Andrew | --- | CIU |
| 7440 | RF-Cable | RG-223 0.8m | Andrew | --- | CIU |
| 7441 | RF-Cable | RG-223 0.8m | Andrew | --- | CIU |
| 7453 | RF-Cable | RG223 2m SMA. | Andrew | --- | CIU |
| 7454 | RF-Cable | RG223 2m SMA. | Andrew | --- | CIU |
| 7455 | RF-Cable | RG223 2m SMA. | Andrew | --- | CIU |
| 7144 | Attenuator | 2N-20dB | Inmet 64671 | --- | CIU |
| 7341 | Power Attenuator | 768-20 | Narda | --- | CIU |
| 7368 | Matrix | | COMMSCOPE | --- | weekly |

CIU = Calibrate in use

## 3.3 Input and output losses

All recorded power levels should be referenced to the input and output connectors of the repeater, unless explicitly stated otherwise.
The test equipment used in this test has to be calibrated, so that the functionality is also checked.
All cables, attenuators, splitter, isolator, circulator and combiner etc. must be measured before testing and used for compensation during testing.

## 3.4 Measurement uncertainty

The extended measurement uncertainty corresponds to the measurement results from the standard measurement uncertainty multiplied by the coverage factor k=2. The true value is located in the corresponding interval with a probability of 95 %.

# 4 Test site (Bureau Veritas Consumer Products Services)

FCC Test site: **96997**
IC OATS: **IC3475A-1**
**See relevant dates under section 10 of this test report.**

# 5 RF Power Out: §90.635, §2.1046

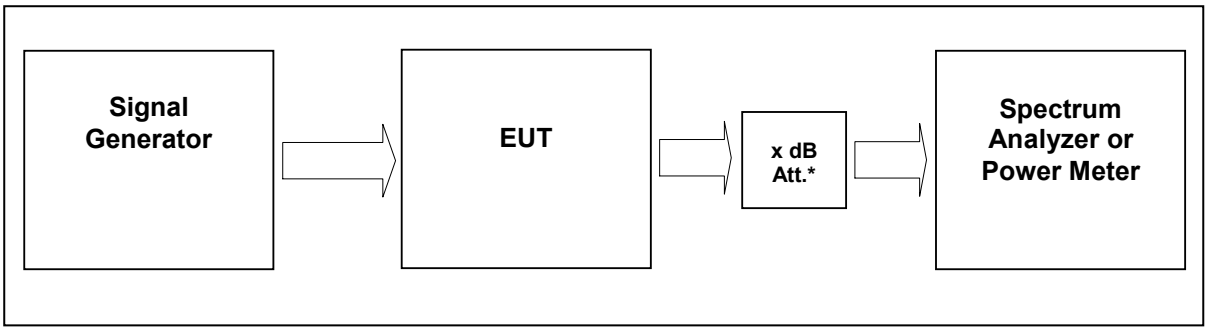


External Attenuator x dB = 20 dB

Figure 5-#1 Test setup: RF Power Out: §90.635, §2.1046

| | |
|---|---|
| Measurement uncertainty | ± 0,38 dB |
| Test equipment used | 9054, 9233, 7444; 7306; 7144; 7454; 7453; 7341; 7449; 7368 |

## 5.1 Limit

Minimum standard:

§90.541 Transmitting power limits.
The transmitting power of base, mobile, portable and control stations operating in the 769-775 MHz and 799-805 MHz frequency bands must not exceed the maximum limits in this section, and must also comply with any applicable effective radiated power limits in §90.545.
(a) The transmitting power of base transmitters must not exceed the limits given in paragraphs (a), (b) and (c) of §90.635.

§ 90.635 Limitations on power and antenna height.
(a) The effective radiated power and antenna height for base stations may not exceed 1 kilowatt (30 dBw) and 304 m. (1,000 ft.) above average terrain (AAT), respectively, or the equivalent thereof as determined from the Table. These are maximum values, and applicants will be required to justify power levels and antenna heights requested.

## 5.2 Test method

§ 2.1046 Measurements required: RF power output.

(a) For transmitters other than single sideband, independent sideband and controlled carrier radiotelephone, power output shall be measured at the RF output terminals when the transmitter is adjusted in accordance with the tune-up procedure to give the values of current and voltage on the circuit circuit elements specified in § 2.1033(c)(8). The electrical characteristics of the radio frequency load attached to the output terminals when this test is made shall be stated.

(c) For measurements conducted pursuant to paragraphs (a) and (b) of this section, all calculations and methods used by the applicant for determining carrier power or peak envelope power, as appropriate, on the basis of measured power in the radio frequency load attached to the transmitter output terminals shall be shown. Under the test conditions specified, no components of the emission spectrum shall exceed the limits specified in the applicable rule parts as necessary for meeting occupied bandwidth or emission limitations

## 5.3 Test Results

Detector RMS.

Test signal Analog:
FM signal with 3.0 kHz deviation and 2.5 kHz rate and sine waveform.

Test signal APCO Phase1 C4FM:
Modulation 4FSK, with 1.8 kHz deviation and 4.8 ksym/s symbol rate

Test signal APCO Phase2 H-DQPSK:
Modulation pi/4-DQPSK, 6 ksym/s symbol rate

According to ANSI C63.4 section 13.1 Table 5 for operating frequencies more then 10MHz: The test shall be performed at Bottom, Middle and Top frequencies.

### 5.3.1 Downlink

| Modulation | Measured at | | RBW VBW Span | RF Power [dBm] | RF Power [W] | Plot - |
|---|---|---|---|---|---|---|
| Analog | Middle | 772 MHz | 100kHz 300kHz 1,5MHz | 31.0 | 1.26 | 5.3.1.1 #1 |
| APCO Phase1 C4FM | Middle | 772 MHz | 100kHz 300kHz 1,5MHz | 31.0 | 1.26 | 5.3.1.2 #1 |
| APCO Phase2 H-DQPSK | Middle | 772 MHz | 100kHz 300kHz 1,5MHz | 31.0 | 1.26 | 5.3.1.3 #1 |
| Maximum output power = 31.0 dBm = 1.26 W | | | | | | |
| Limit Maximum output power = 60 dBm = 1000 W (erp) | | | | | | |

Table 5.3.1-#1 RF Power Out: §90.635, §2.1046 Test Results Downlink

The max RF Power out is 31 dBm, so the maximum antenna gain (x) can be calculated as follow:

**Limit** = 1000W (erp) = **60 dBm** Info: 1000W (erp) = 1640W (eirp)

60 dBm **>** 31 dBm + x ------> x = 60 dBm – 31 dBm = <u>29 dBd</u>

x dBi = 29 dBd + 2.15 = <u>31.15 dBi</u>

=> The antenna that will use for the complete system have to have a gain lower than 31.15 dBi, relative to a dipol.

| Modulation | Pin / dBm (Ref. point A) |
|---|---|
| Analog | -2.0 |
| APCO Phase1 C4FM | -2.8 |
| APCO Phase2 H-DQPSK | -2.1 |

Table 5.3.1-#2 RF Power Out: §90.635, §2.1046 Test Results Downlink Input power

### 5.3.1.1 Analog

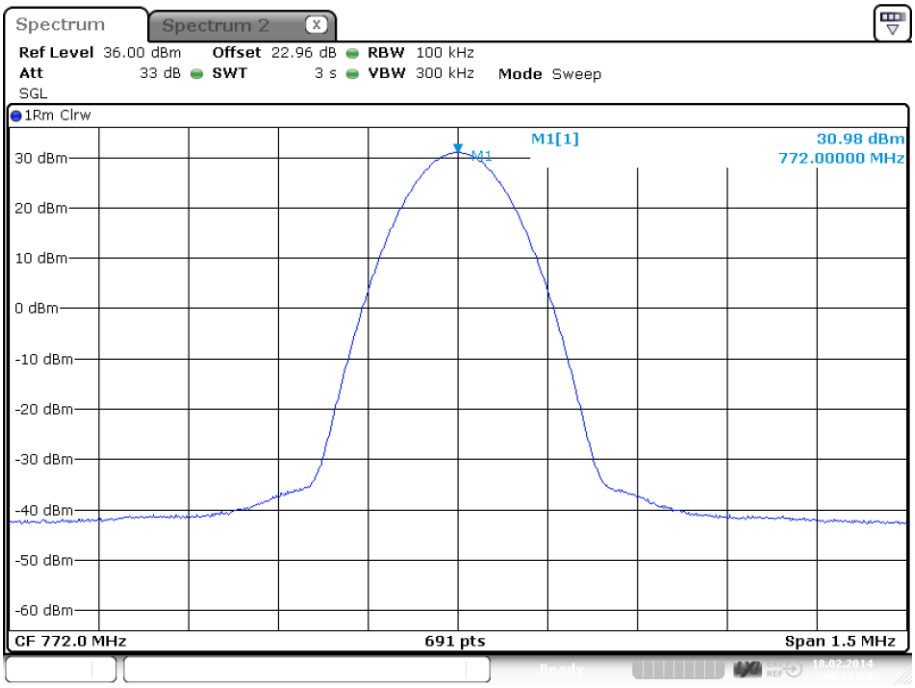


plot 5.3.1.1-#1 RF Power Out: §90.635, §2.1046; Test Results; Downlink; Analog

### 5.3.1.2 APCO Phase1 C4FM

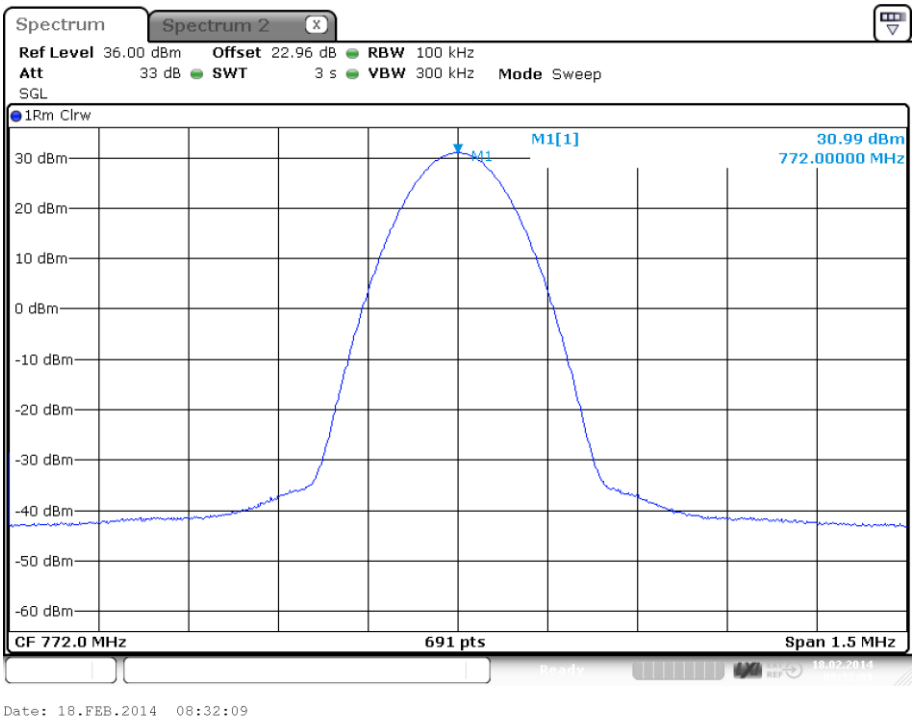


plot 5.3.1.2-#1 RF Power Out: §90.635, §2.1046; Test Results; Downlink; APCO Phase1 C4FM

### 5.3.1.3 APCO Phase2 H-DQPSK

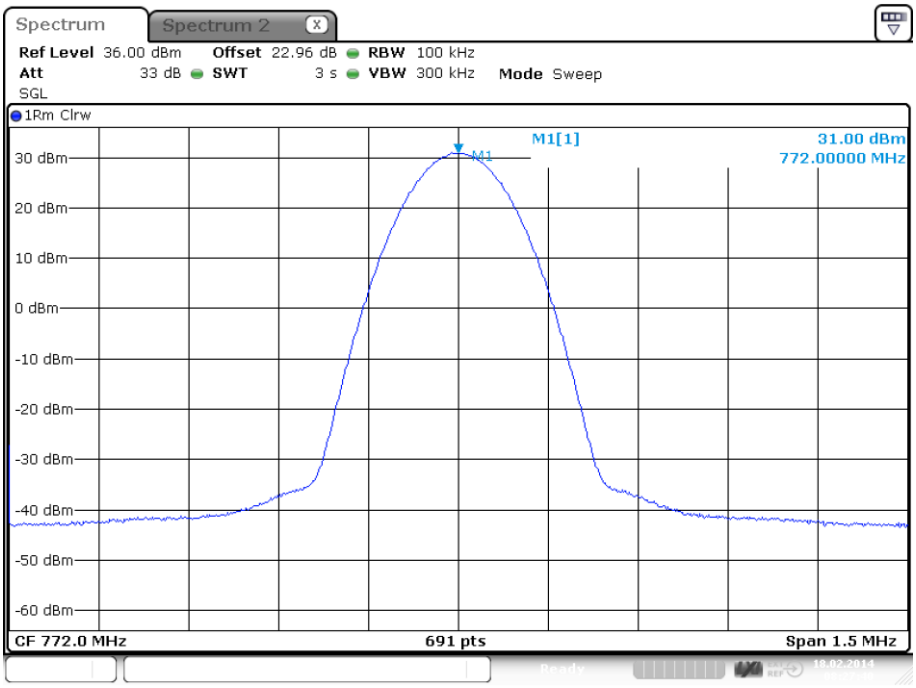


plot 5.3.1.3-#1 RF Power Out: §90.635, §2.1046; Test Results; Downlink; APCO Phase2 H-DQPSK

### 5.3.2 Uplink

n.a.

Note: The EUT does not transmit over the air in the uplink direction.

## 5.4 Summary test result

| | |
|---|---|
| Test result | complies, according the plots above |
| Tested by: | M. Leinfelder |
| Date: | 18.02.2014 |

# 6 Occupied Bandwidth: §2.1049

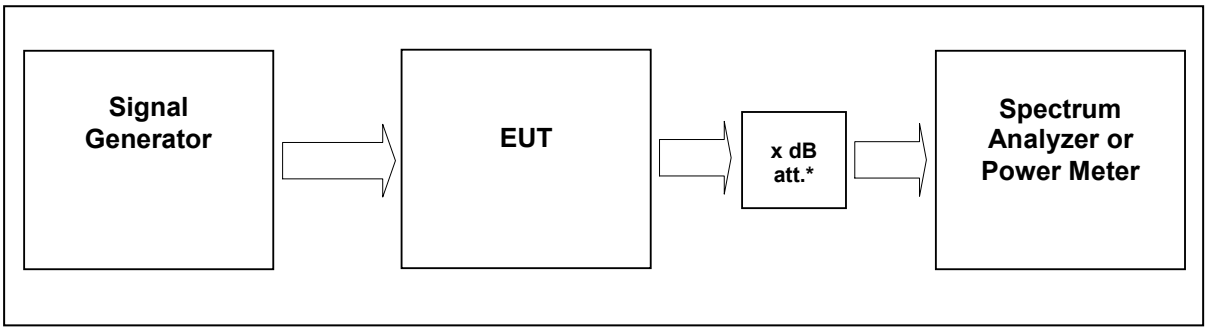


External Attenuator x dB = 20 dB

Figure 6-#1 Test setup: Occupied Bandwidth: §2.1049

| | |
|---|---|
| Measurement uncertainty | ± 0,38 dB |
| Test equipment used | 9054, 9052, 7366, 7367, 7299, 7280, 7363 |

## 6.1 Limit

The spectral shape of the output should look similar to input for all modulations.

## 6.2 Test method

Para. No.2.1049
The occupied bandwidth, that is the frequency bandwidth such that, below its lower and above its upper frequency limits, the mean powers radiated are each equal to 0.5 percent of the total mean power radiated by a given emission shall be measured under the following conditions as applicable:

## 6.3 Test results

### 6.3.1 Downlink

Detector peak

| Modulation | Measured at | | RBW<br>VBW<br>Span | Occupied Bandwidth | Plot # |
|---|---|---|---|---|---|
| Analog | Middle | 766.5 MHz | 1 kHz<br>10 kHz<br>125 kHz | 8.68 kHz | 6.3.1.1<br>#1, #2 |
| APCO Phase1 C4FM | Middle | 766.5 MHz | 1 kHz<br>10 kHz<br>125 kHz | 6.69 kHz | 6.3.1.2<br>#1, #2 |
| APCO Phase2 H-DQPSK | Middle | 766.5 MHz | 1 kHz<br>10 kHz<br>125 kHz | 7.96 kHz | 6.3.1.3<br>#1, #2 |

Table 6.3-#1 Occupied Bandwidth: §2.1049 Test results

### 6.3.1.1 Analog

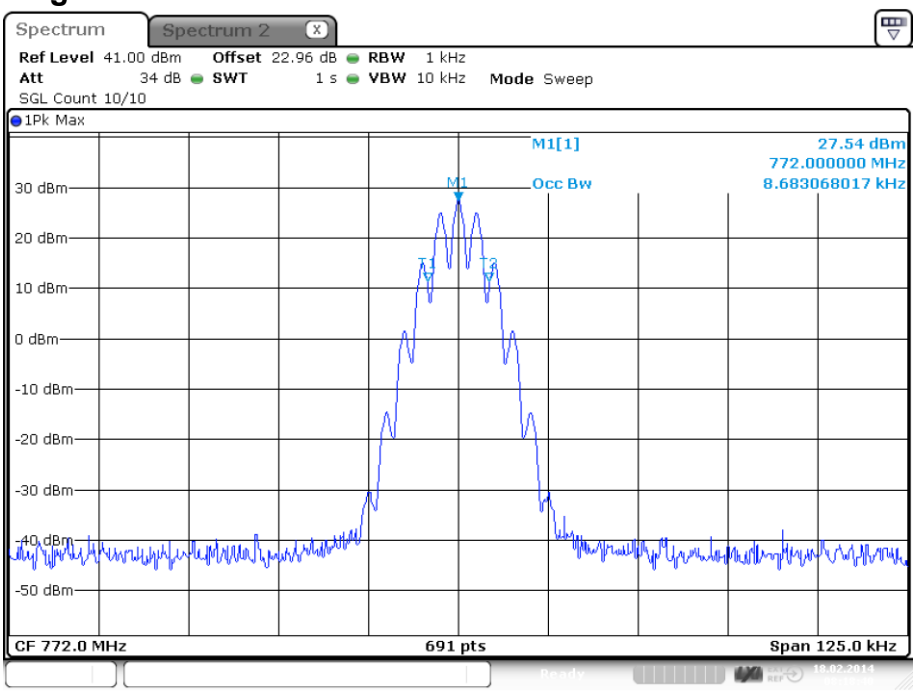


plot 6.3.1.1-#1 Occupied Bandwidth: §2.1049; Test results; Downlink; Analog Output

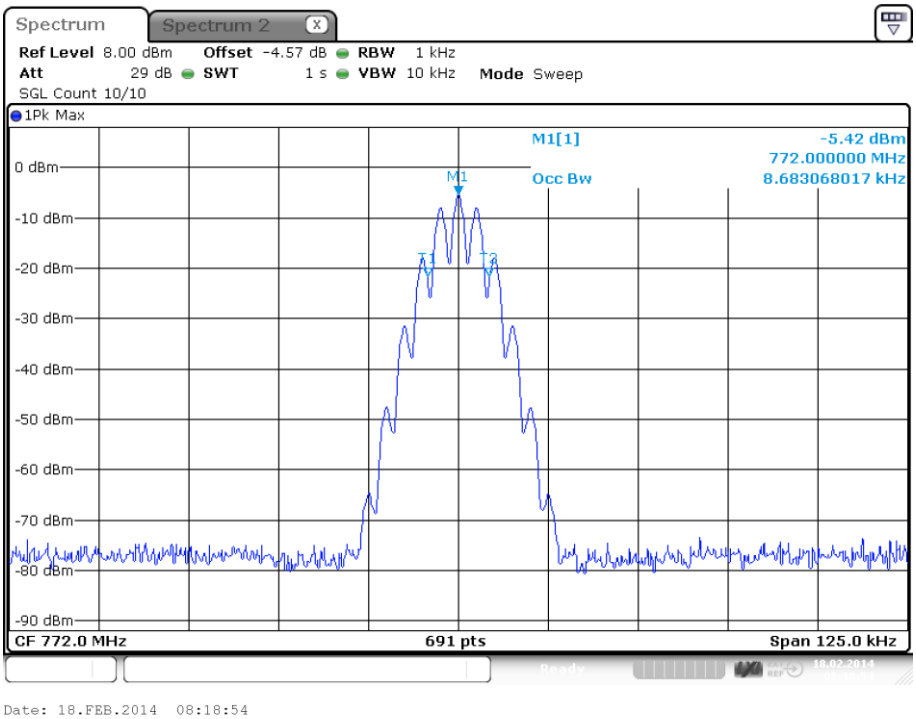


plot 6.3.1.1-#2 Occupied Bandwidth: §2.1049; Test results; Downlink; Analog Input

### 6.3.1.2 APCO Phase1 C4FM

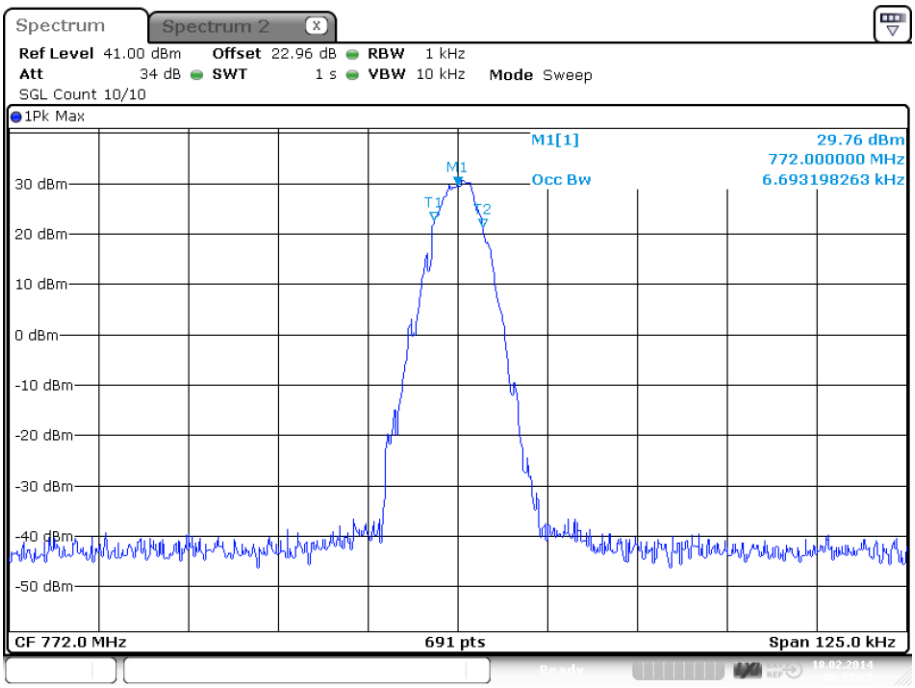


Date: 18.FEB.2014 08:32:26

plot 6.3.1.1-#3 Occupied Bandwidth: §2.1049; Test results; Downlink; Analog Output

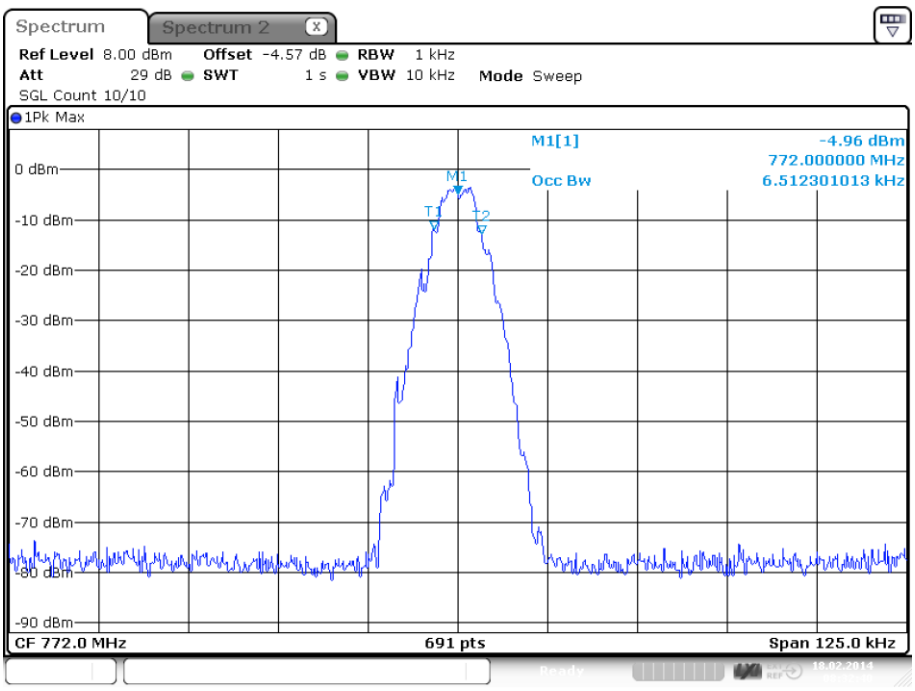


Date: 18.FEB.2014 08:32:40

plot 6.3.1.1-#4 Occupied Bandwidth: §2.1049; Test results; Downlink; Analog Input

### 6.3.1.3 APCO Phase2 H-DQPSK

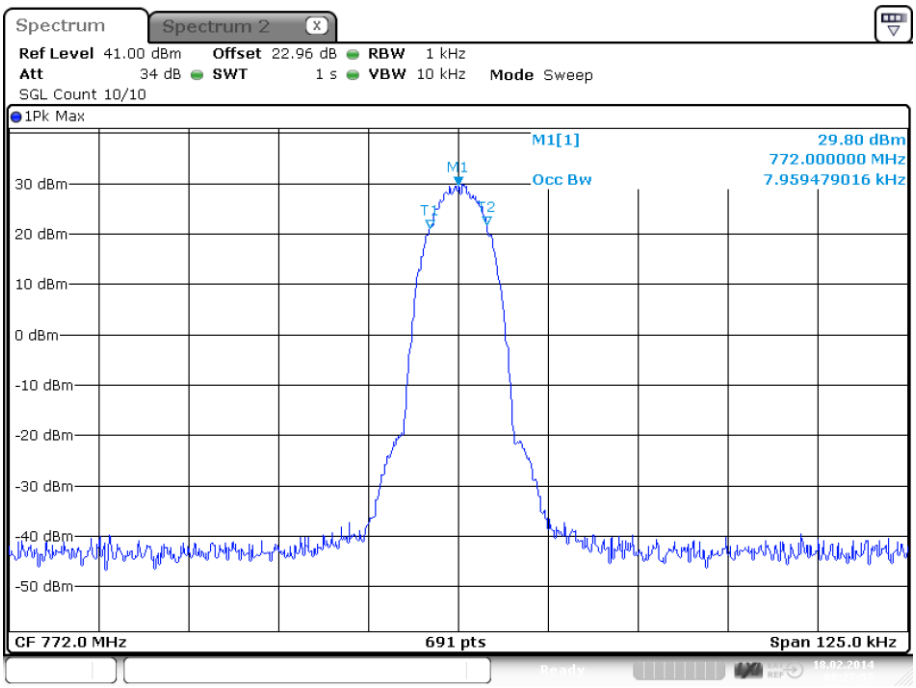


Date: 18.FEB.2014 08:27:57

plot 6.3.1.1-#5 Occupied Bandwidth: §2.1049; Test results; Downlink; Analog Output

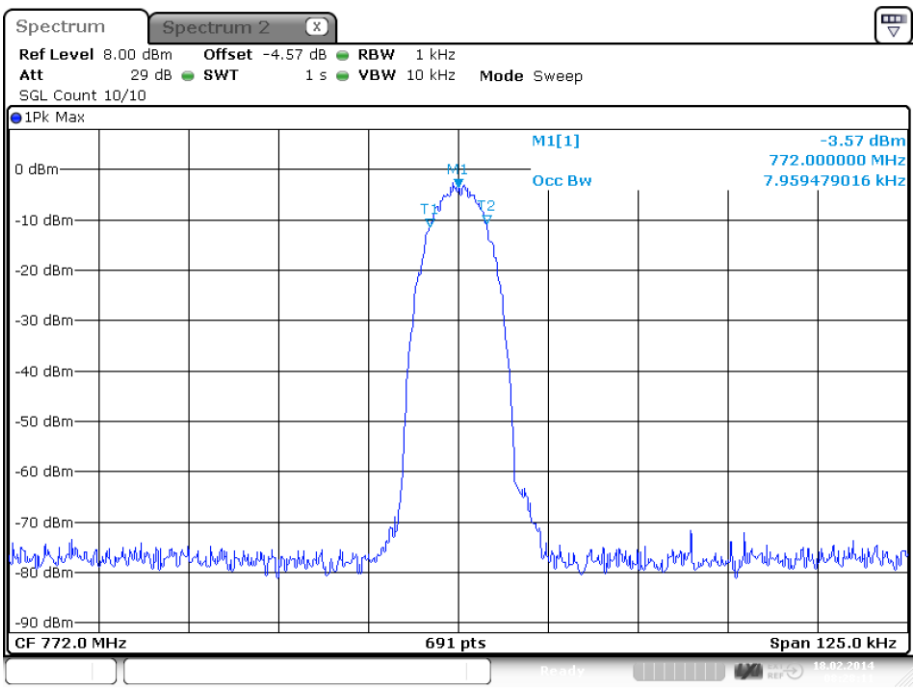


Date: 18.FEB.2014 08:28:11

plot 6.3.1.1-#6 Occupied Bandwidth: §2.1049; Test results; Downlink; Analog Input

### 6.3.2 Uplink

n.a.
Note: The EUT does not transmit over the air in the uplink direction.

## 6.4 Summary test result

| | |
|---|---|
| Test result | complies, according the plots above |
| Tested by: | M. Leinfelder |
| Date: | 18.02.2014 |

# 7 Spurious Emissions at Antenna Terminals: §90.543, §2.1051

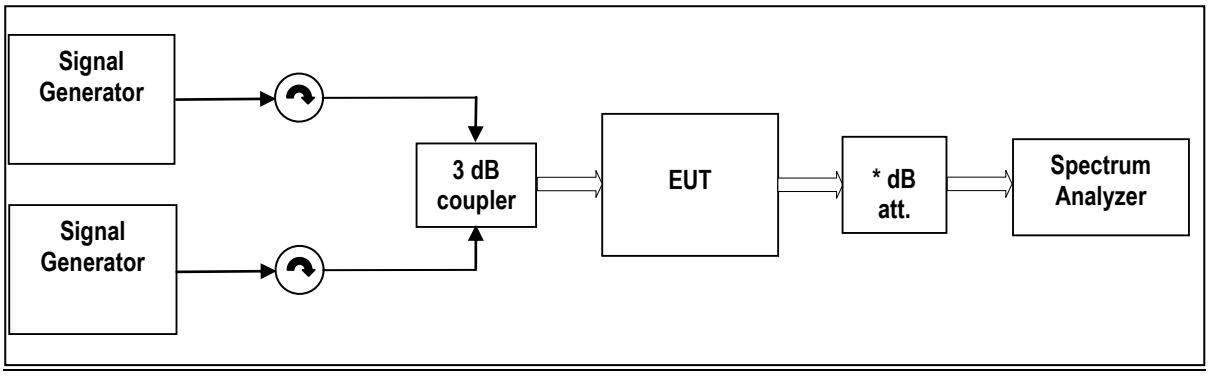


External Attenuator x dB = 20 dB

Figure 7-#1 Test setup: Spurious Emissions at Antenna Terminals: §90.543, §2.1051

| | | |
|---|---|---|
| Measurement uncertainty | ± 0,54 dB<br>± 1,2 dB<br>± 1,5 dB | 9 kHz to 3 GHz<br>3 GHz to 7 GHz<br>7 GHz to 26 GHz |
| Test equipment used | 9054, 9233, 8849; 7444; 7443; 7306; 7307; 7144; 7454;7453; 7341; 7449; 7368 | |

## 7.1 Limit

**§ 90.543 Emission limitations.**
Transmitters designed to operate in 769–775 MHz and 799–805 MHz frequency bands must meet the emission limitations in paragraphs (a) through (d) of this section. Transmitters operating in 763–768 MHz and 793–798 MHz bands must meet the emission limitations in(e) of this section.
Limit -13dBm

## 7.2 Test method

### 7.2.1 FCC CFR47

Para. No 2.1051 Measurements required: Spurious emissions at antenna terminals.
The radio frequency voltage or powers generated within the equipment and appearing on a spurious frequency shall be checked at the equipment output terminals when properly loaded with a suitable artificial antenna. Curves or equivalent data shall show the magnitude of each harmonic and other spurious emission that can be detected when the equipment is operated under the conditions specified in § 2.1049 as appropriate. The magnitude of spurious emissions which are attenuated more than 20 dB below the permissible value need not be specified.
[39 FR 5919, Feb. 15, 1974. Redesigned and amended at 63 FR 36599, July 7, 1998]

## 7.3 Test results

### 7.3.1 Downlink

**<1MHz from Band Edge**
Detector: RMS

| Modulation | Measured at Band Edge | Carriers | RBW<br>VBW<br>Span<br>Sweep points | Max. level (dBm) | Plot |
|---|---|---|---|---|---|
| Analog | Lower Edge | 769.0125 MHz<br>769.0375 MHz | 300 Hz<br>3 kHz<br>1.1 MHz<br>10001 points | -21.0 | 7.3.1.1<br>#1<br><br>#2 |
| | Upper Edge | 774.9625 MHz<br>774.9875 MHz | | | |
| APCO Phase1 C4FM | Lower Edge | 769.0125 MHz<br>769.0375 MHz | 300 Hz<br>3 kHz<br>1.1 MHz<br>10001 points | -22.6 | 7.3.1.2<br>#1<br><br>#2 |
| | Upper Edge | 774.9625 MHz<br>774.9875 MHz | | | |
| APCO Phase2 H-DQPSK | Lower Edge | 769.0125 MHz<br>769.0375 MHz | 300 Hz<br>3 kHz<br>1.1 MHz<br>10001 points | -20.3 | 7.3.1.3<br>#1<br><br>#2 |
| | Upper Edge | 774.9625 MHz<br>774.9875 MHz | | | |

Table 7.3-#1 Spurious Emissions at Antenna Terminals: §90.543, §2.1051 Test results <1MHz from Band

**>1MHz from Band Edge**
Detector: RMS

| Modulation | Carrier | RBW<br>VBW<br>Span | Max. level (dBm) | Plot |
|---|---|---|---|---|
| Analog | 772.0 MHz | 1MHz<br>3MHz<br>30MHz – 10GHz | -24.6 | 7.3.1.4<br>#1 |
| APCO Phase1 C4FM | 772.0 MHz | 1MHz<br>3MHz<br>30MHz – 10GHz | -24.5 | 7.3.1.5<br>#1 |
| APCO Phase2 H-DQPSK | 772.0 MHz | 1MHz<br>3MHz<br>30MHz – 10GHz | -24.5 | 7.3.1.6<br>#1 |

Table 7.3-#2 Spurious Emissions at Antenna Terminals: §90.543, §2.1051 Test results >1MHz from Band Edge

### 7.3.1.1 Analog < 1MHz to band edge

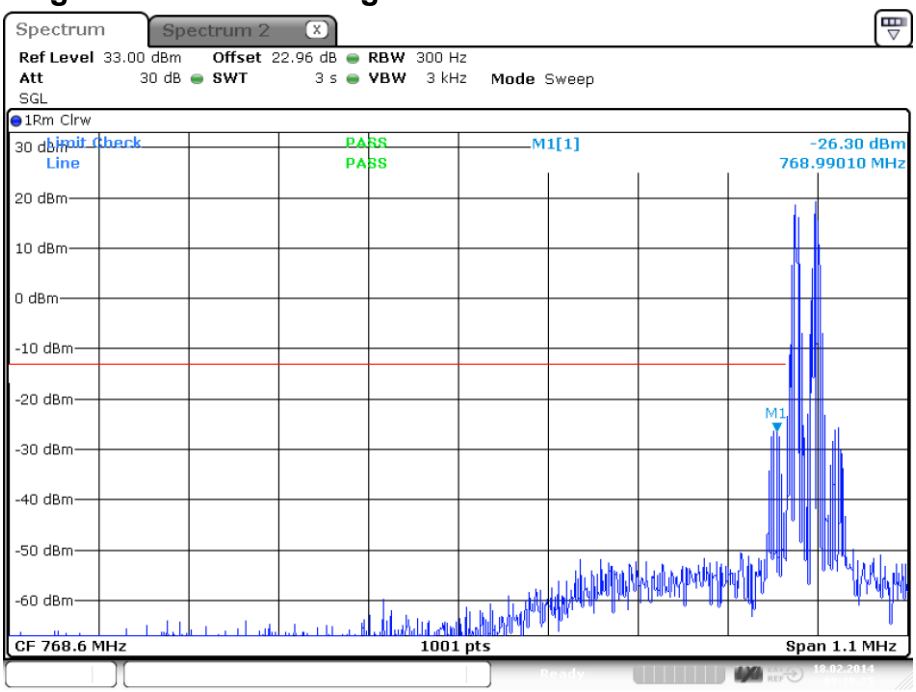


plot 7.3.1.1-#1 Spurious Emissions at Antenna Terminals: §90.543, §2.1051; Test results; Downlink; Analog < 1MHz to band edge; Lower Band Edge

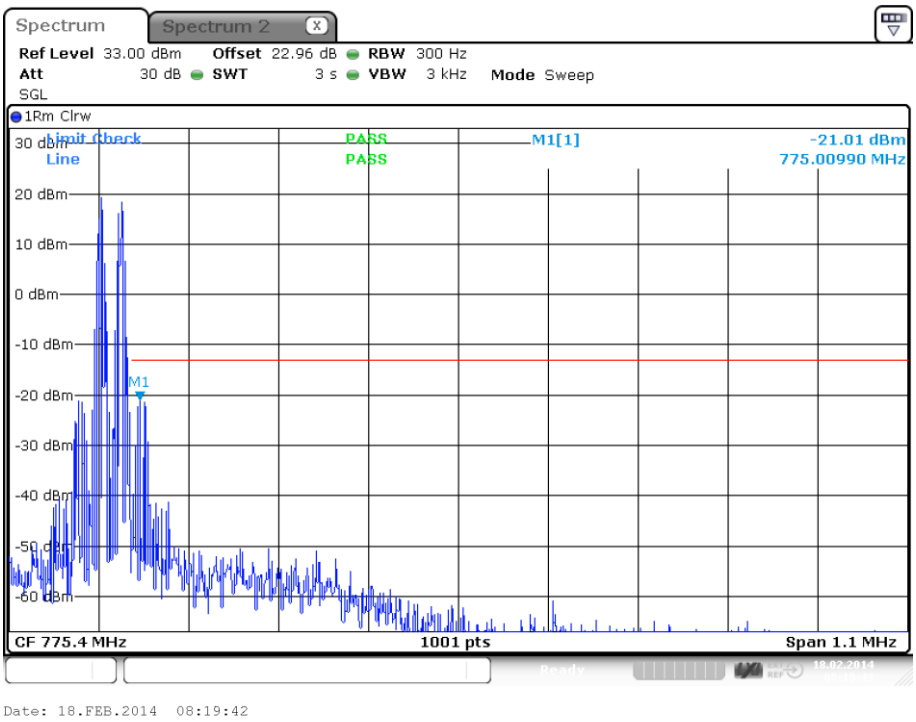


plot 7.3.1.1-#2 Spurious Emissions at Antenna Terminals: §90.543, §2.1051; Test results; Downlink; Analog < 1MHz to band edge; Upper Band Edge

### 7.3.1.2 APCO Phase1 C4FM < 1MHz to band edge

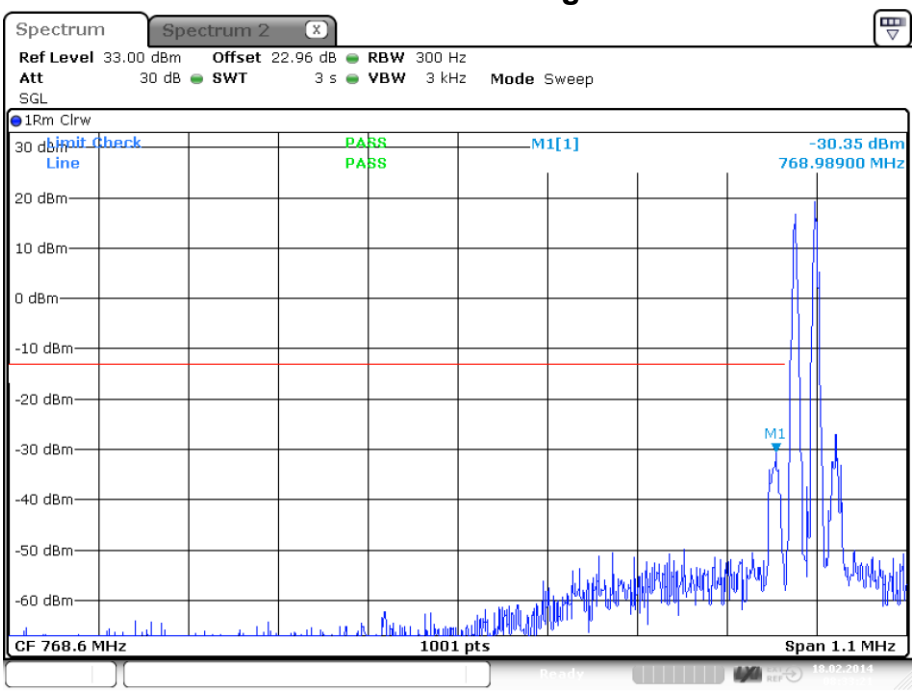


Date: 18.FEB.2014 08:33:21

plot 7.3.1.1-#3 Spurious Emissions at Antenna Terminals: §90.543, §2.1051; Test results; Downlink; Analog < 1MHz to band edge; Lower Band Edge

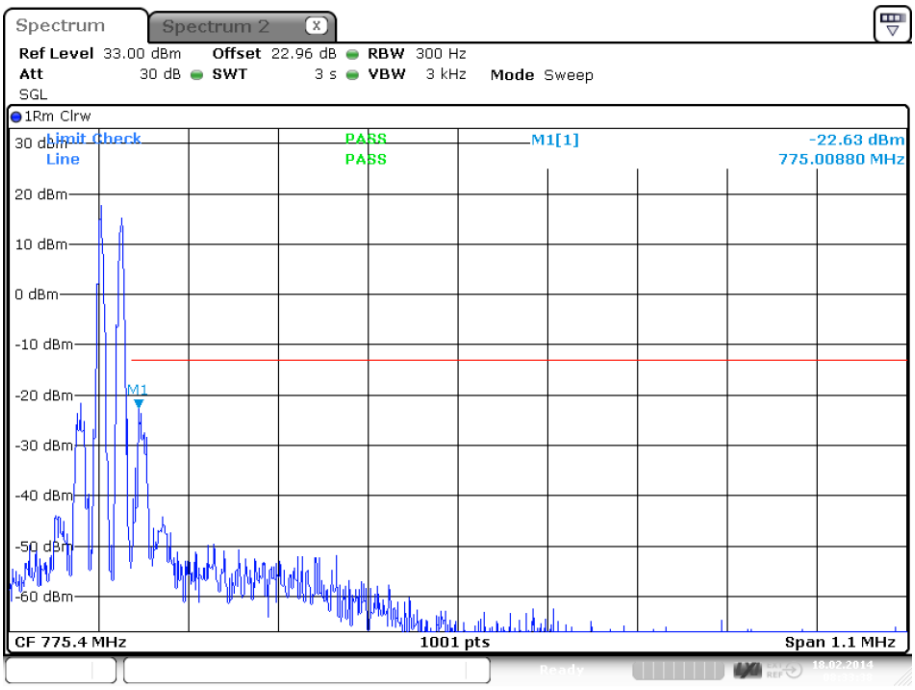


Date: 18.FEB.2014 08:33:38

plot 7.3.1.1-#4 Spurious Emissions at Antenna Terminals: §90.543, §2.1051; Test results; Downlink; Analog < 1MHz to band edge; Upper Band Edge

### 7.3.1.3 APCO Phase2 H-DQPSK < 1MHz to band edge

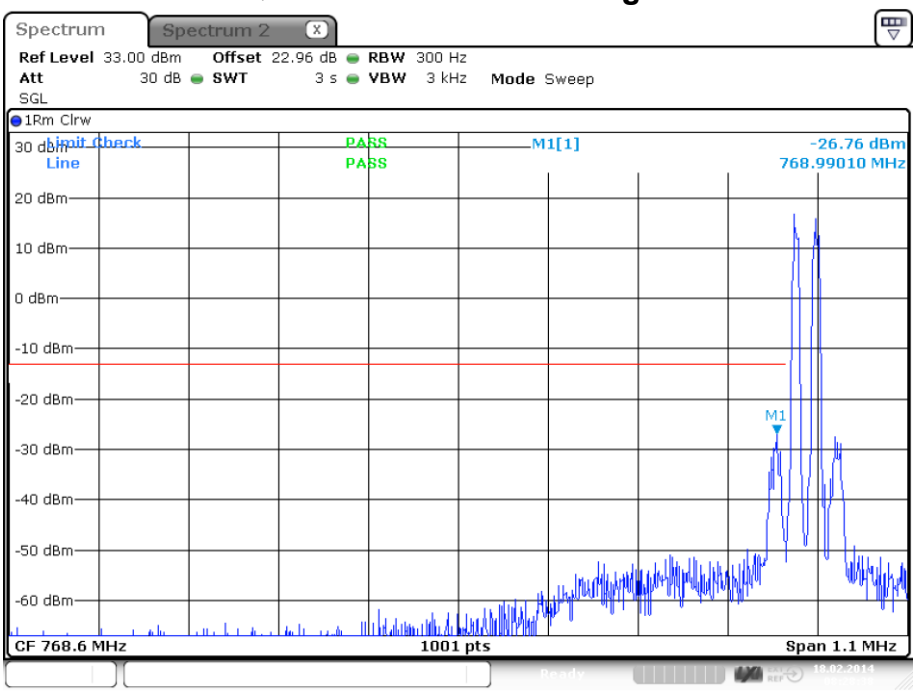


Date: 18.FEB.2014 08:28:37

plot 7.3.1.1-#5 Spurious Emissions at Antenna Terminals: §90.543, §2.1051; Test results; Downlink; Analog < 1MHz to band edge; Lower Band Edge

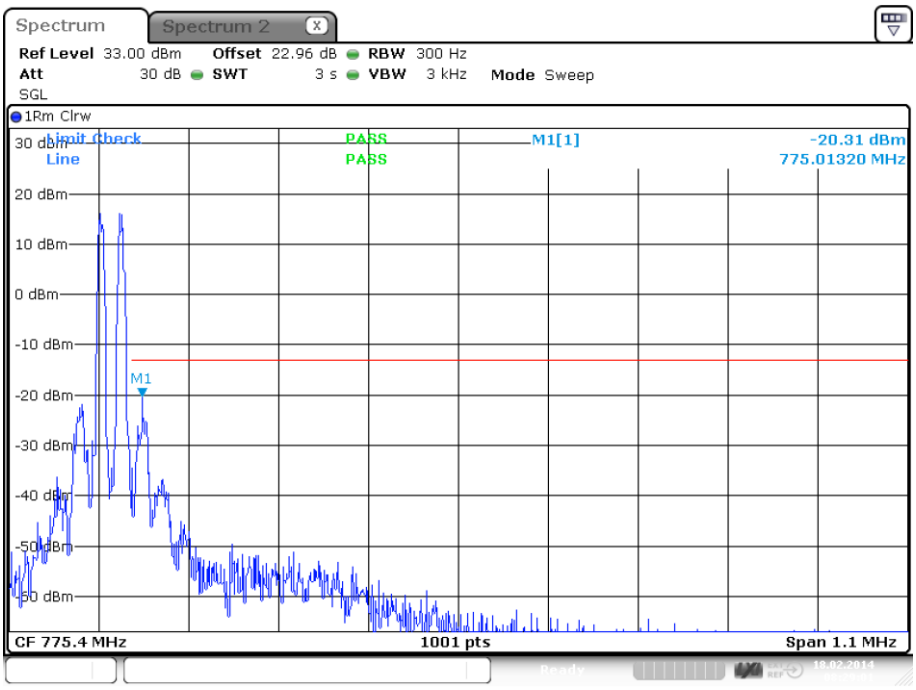


Date: 18.FEB.2014 08:29:01

plot 7.3.1.1-#6 Spurious Emissions at Antenna Terminals: §90.543, §2.1051; Test results; Downlink; Analog < 1MHz to band edge; Upper Band Edge

### 7.3.1.4 Analog > 1MHz to band edge

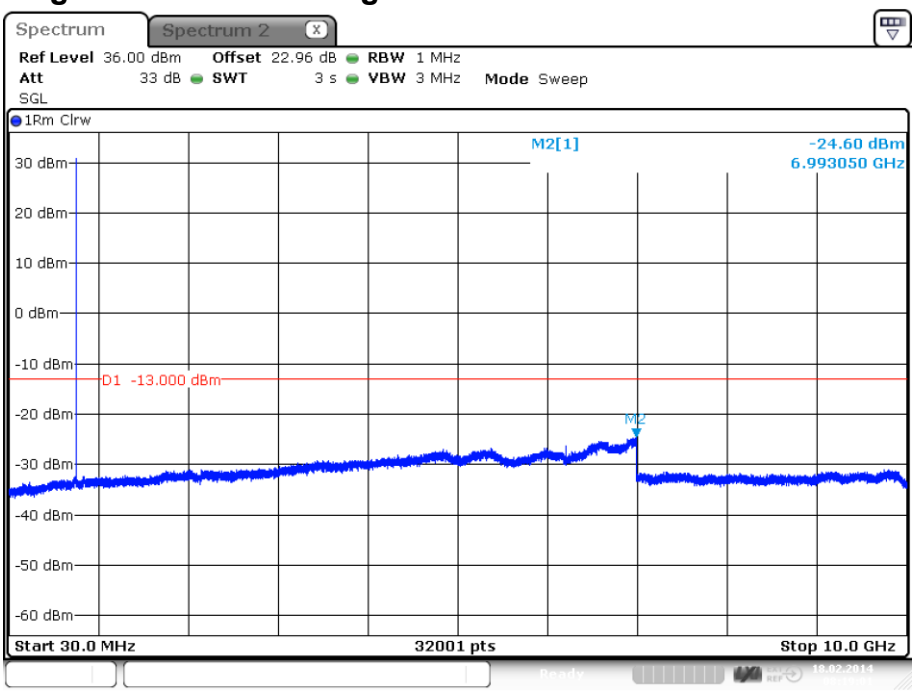


Date: 18.FEB.2014 08:19:01

plot 7.3.1.1-#7 Spurious Emissions at Antenna Terminals: §90.543, §2.1051; Test results; Downlink; Analog < 1MHz to band edge

### 7.3.1.5 APCO Phase1 C4FM > 1MHz to band edge

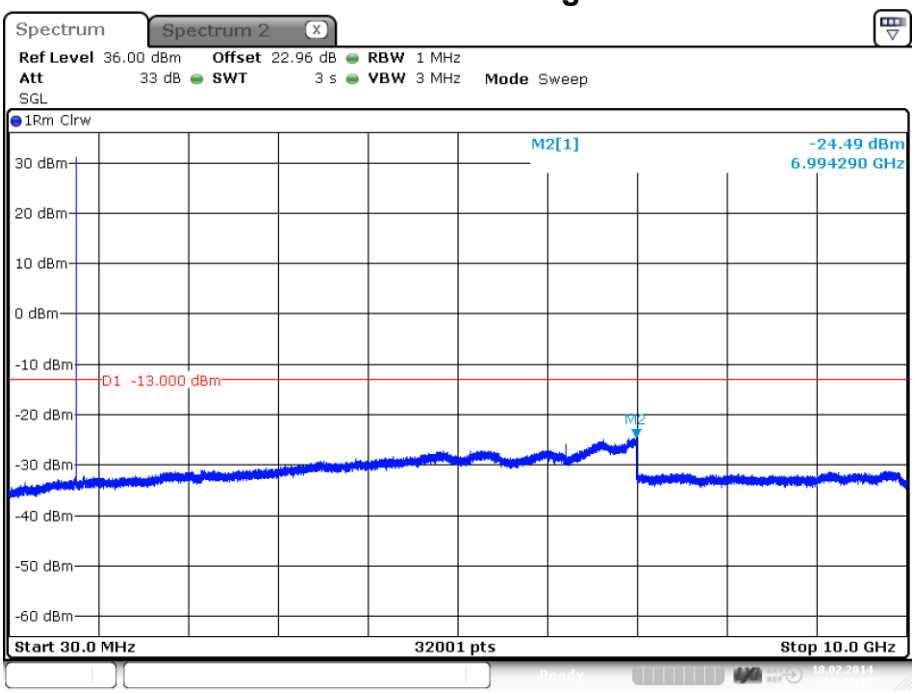


Date: 18.FEB.2014 08:32:46

plot 7.3.1.1-#8 Spurious Emissions at Antenna Terminals: §90.543, §2.1051; Test results; Downlink; Analog < 1MHz to band edge

### 7.3.1.6 APCO Phase2 H-DQPSK > 1MHz to band edge

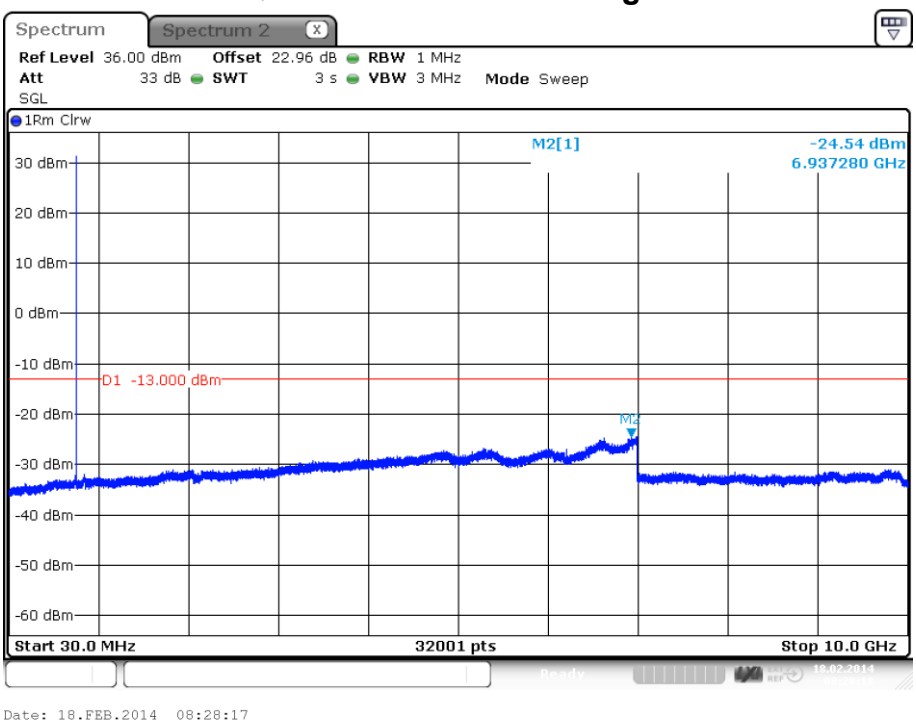


plot 7.3.1.1-#9 Spurious Emissions at Antenna Terminals: §90.543, §2.1051; Test results; Downlink; Analog < 1MHz to band edge

## 7.3.2 Uplink

n.a.

Note: The EUT does not transmit over the air in the uplink direction.

## 7.4 Summary test result

| | |
|---|---|
| Test result | complies, according the plots above |
| Tested by: | M. Leinfelder |
| Date: | 18.02.2014 |

# 8 Out of Band Rejection

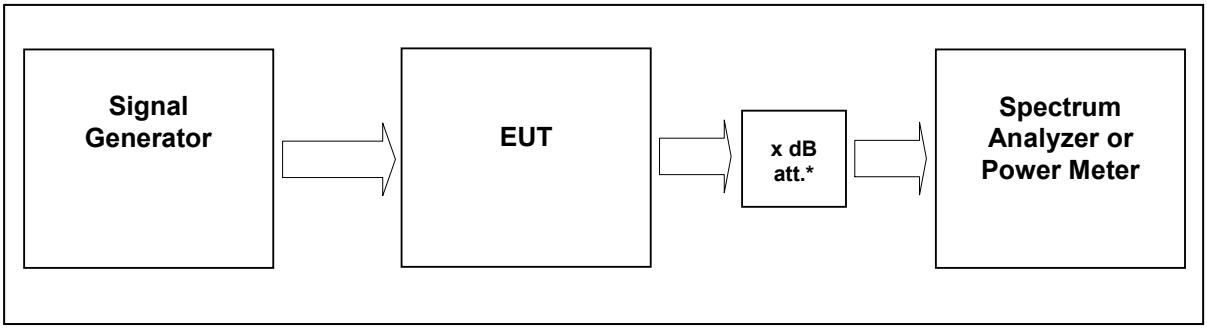


External Attenuator DL x dB = 20 dB
figure 8-#1 Test setup: Out of Band Rejection

| | |
|---|---|
| Measurement uncertainty | ± 0,38 dB |
| Test equipment used | 9054, 9233, 7444; 7306; 7144; 7454; 7453; 7341; 7449 |

## 8.1 Limit

KDB 935210 D02 v02
Clause: D.3 POLICIES AND PROCEDURES;
Subclause:
(I) Out of Band Rejection – Test for rejection of out of band signals. Filter frequency response plots are acceptable.

## 8.2 Test method

KDB 935210 D02 v02
Clause: D.3 POLICIES AND PROCEDURES;
Subclause:
(I) Out of Band Rejection – Test for rejection of out of band signals. Filter frequency response plots are acceptable.

## 8.3 Test results

Detector Peak max hold

### 8.3.1 Downlink

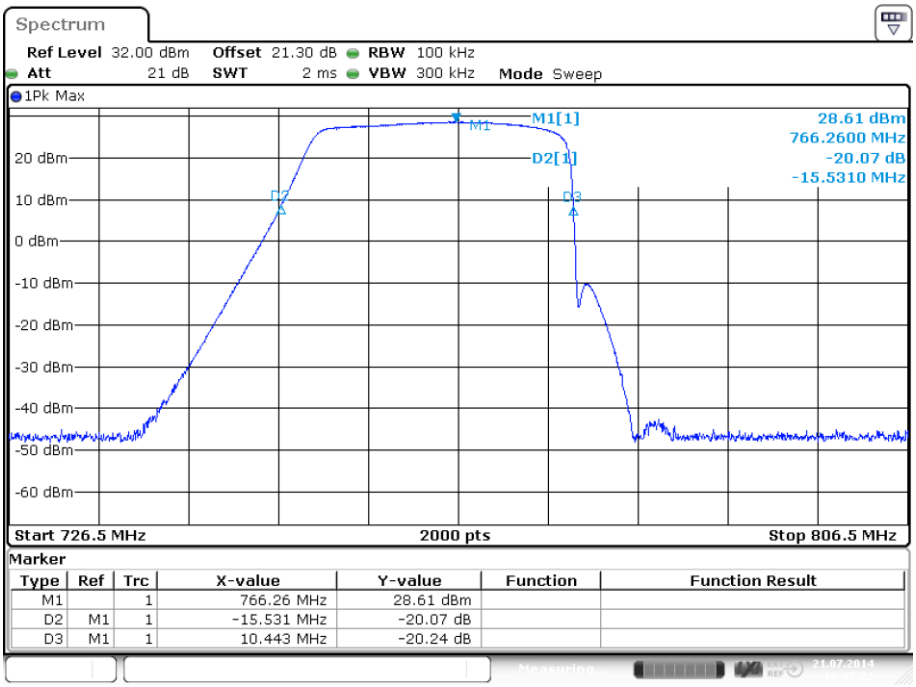


plot 8.3.1-#1 Out of Band Rejection; Test results; Downlink;

### 8.3.2 Uplink

n.a.

Note: The EUT does not transmit over the air in the uplink direction.

## 8.4 Summary test result

| | |
|---|---|
| Test result | complies, according the plots above |
| Tested by: | M. Leinfelder |
| Date: | 21.07.2014 |

# 9 Noise floor

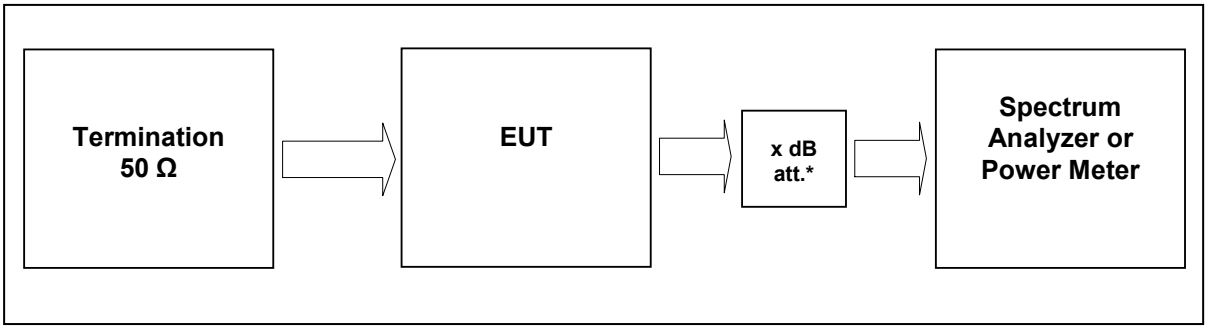


External Attenuator DL x dB = 0 dB

figure 9-#1 Test setup: Noise floor

| | |
|---|---|
| Measurement uncertainty | ± 0,38 dB |
| Test equipment used | 9054, 7144; 7454; 7453; 7449; |

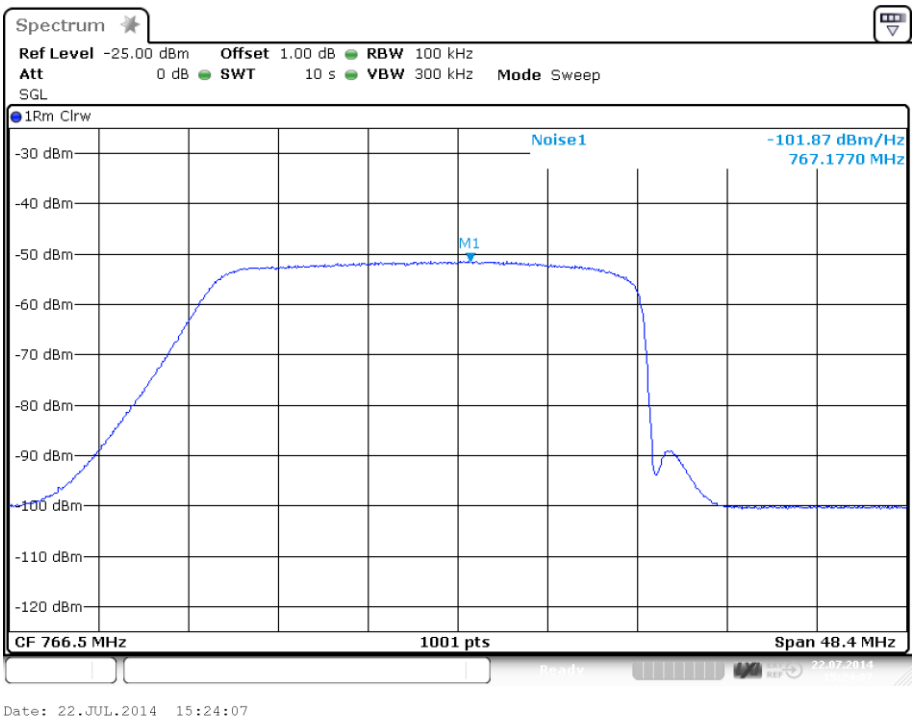


plot 8.3.1-#1 Noise floor;

# 10 Radiated Spurious Emissions at the ECL (Bureau Veritas): §90.543, §2.1053

**picture 10.1:** name plate

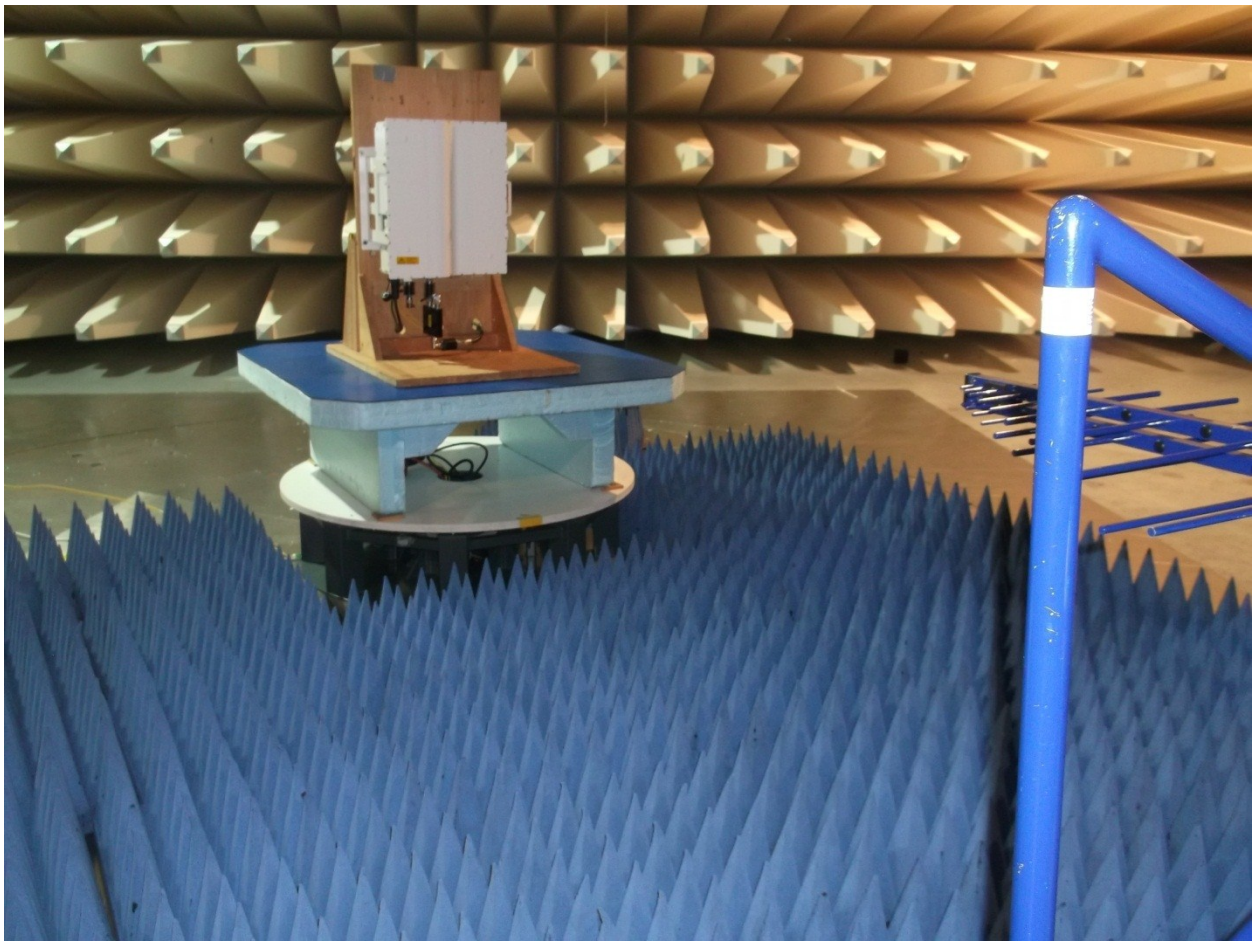

**picture 10.2:** Test setup: Field Strength Emission <1 GHz @3m in the SAC

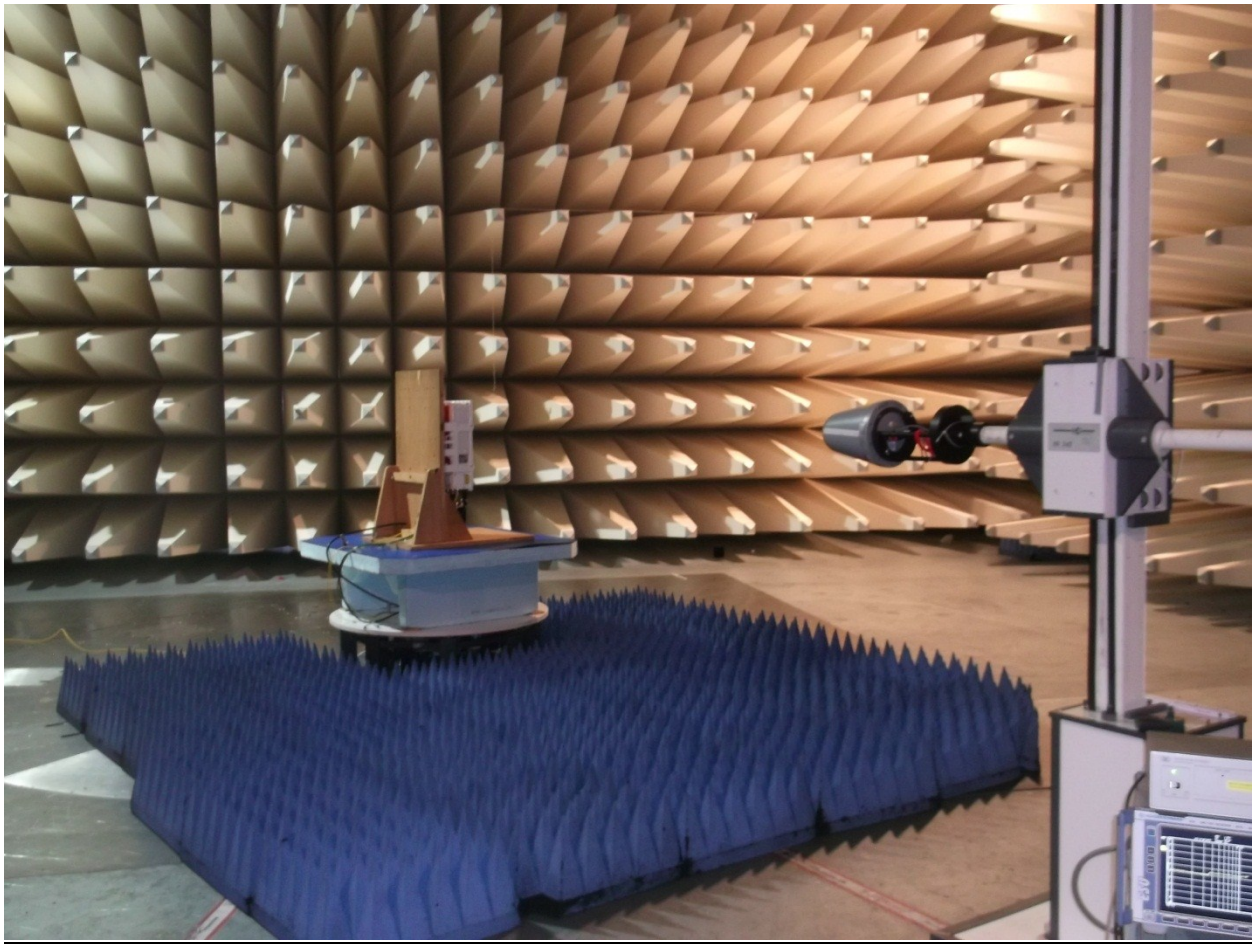

**picture 7.3:** Test setup: Field Strength Emission >1 GHz @3m in the SAC

**This clause specifies requirements for the measurement of radiated emission.**

| Frequency range | Distance: EUT <-> antenna / location | Limit | Test method |
|---|---|---|---|
| 30 MHz - 1 GHz | 3 metres / SAC | FCC 47 CFR Part 90.210 | TIA/EIA-603-C:2004 |
| 1 GHz – 21 GHz | 3 metres / SAC | | |

**Test equipment used:**

| Designation | Type | Manufacturer | Invent.-no. | Cal.-date | due Cal.-date | used |
|---|---|---|---|---|---|---|
| EMI test receiver | ESI40 | Rohde & Schwarz | E1687 | 28.11.2013 | 28.11.2014 | X |
| Antenna | CBL 6111 | Chase | K1026 | 27.06.2014 | 27.06.2015 | X |
| Pre amplifier | AM1431 | Miteq | K1721 | 16.04.2014 | 16.04.2015 | X |
| Antenna | HL 025 | R&S | K1114 | 03.03.2014 | 03.03.2015 | X |
| Preamplifier | AFS4-00102000 | Miteq | K817 | 12.03.2014 | 12.03.2015 | X |
| RF Cable | Sucoflex 100 | Suhner | K1760 | 03.07.2014 | 03.07.2015 | X |

The REMI version 2.135 has been used for max search.

**Test set-up:**

Test location: SAC
Both, the Fully Anechoic Chamber (FAC) and the Semi Anechoic Chamber (SAC) fulfil the requirements of ANSI C63.4 and CISPR 16-1-4 with regards to NSA and SVSWR.
Test Voltage: 115V / 60 Hz
Type of EUT: Wall mounted

**Measurement uncertainty:**

| | |
|---|---|
| Measurement uncertainty expanded (95% or K=2) | ± 4,7 dB for ANSI C63.4 measurement<br>± 0,5 dB for TIA-603 measurement |

## 10.1 Method of Measurement

***Measurement procedure.*** **TIA-603-C**

The antenna substitution method is used to determine the equivalent radiated power at spurious frequencies. The spurious emissions are measured at a distance of 3 meters. The EUT is then replaced with a reference substitution antenna with a known gain referenced to a dipole. This antenna is fed with a signal at the spurious frequency. The level of the signal is adjusted to repeat the previously measured level. The resulting eirp is the signal level fed to the reference antenna corrected for gain referenced to an isotropic dipole (see Figure 7.2).

From KDB (AMPLIFIER, BOOSTER, AND REPEATER REMINDER SHEET):
Radiated spurs (enclosure) – Use of CW signal (low, mid. and high freq.) is acceptable rather than all modulations.

The maximum RFI field strength was determined during the measurement by rotating the turntable (±180 degrees) and varying the height of the receive antenna (h = 1 ... 4 m) as like defined in ANSI C63.4. A measurement receiver has been used with a RBW 120 kHz up to 1 GHz and 1 MHz above 1 GHz. Steps with during pre measurement was half the RBW.

Both, the Fully Anechoic Chamber (FAC) and the Semi Anechoic Chamber (SAC) fulfil the requirements of ANSI C63.4 and CISPR 16-1-4 with regards to NSA and SVSWR.

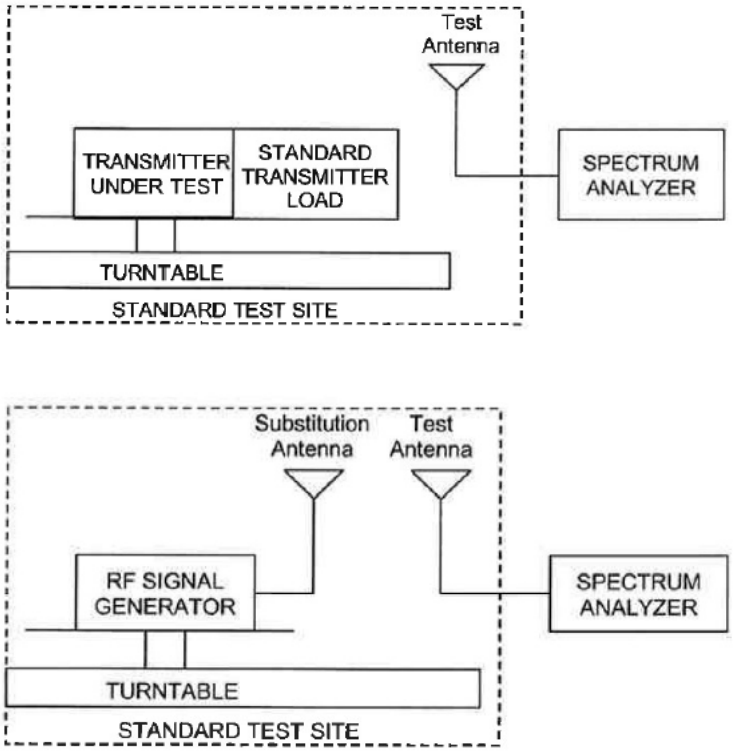


Figure #7.2 Substitution methods TIA/EIA-603-C

## 10.2 Limit

**§ 90.543 Emission limitations.**
Transmitters designed to operate in 769–775 MHz and 799–805 MHz frequency bands must meet the emission limitations in paragraphs (a) through (d) of this section. Transmitters operating in 763–768 MHz and 793–798 MHz bands must meet the emission limitations in(e) of this section.
Limit -13dBm

## 10.3 Climatic values in the lab

| | |
|---|---|
| Temperature: | 19,5° |
| Relative Humidity: | 43% |
| Air-pressure: | 998 hPa |

## 10.4 Test results

### 10.4.1 30 MHz to 1 GHz Downlink (Bottom – Middle – Top) Subpart H

Bottom: 769 MHz; Middle: 772 MHz; Top: 775 MHz

**Vertikal / Horizontal**

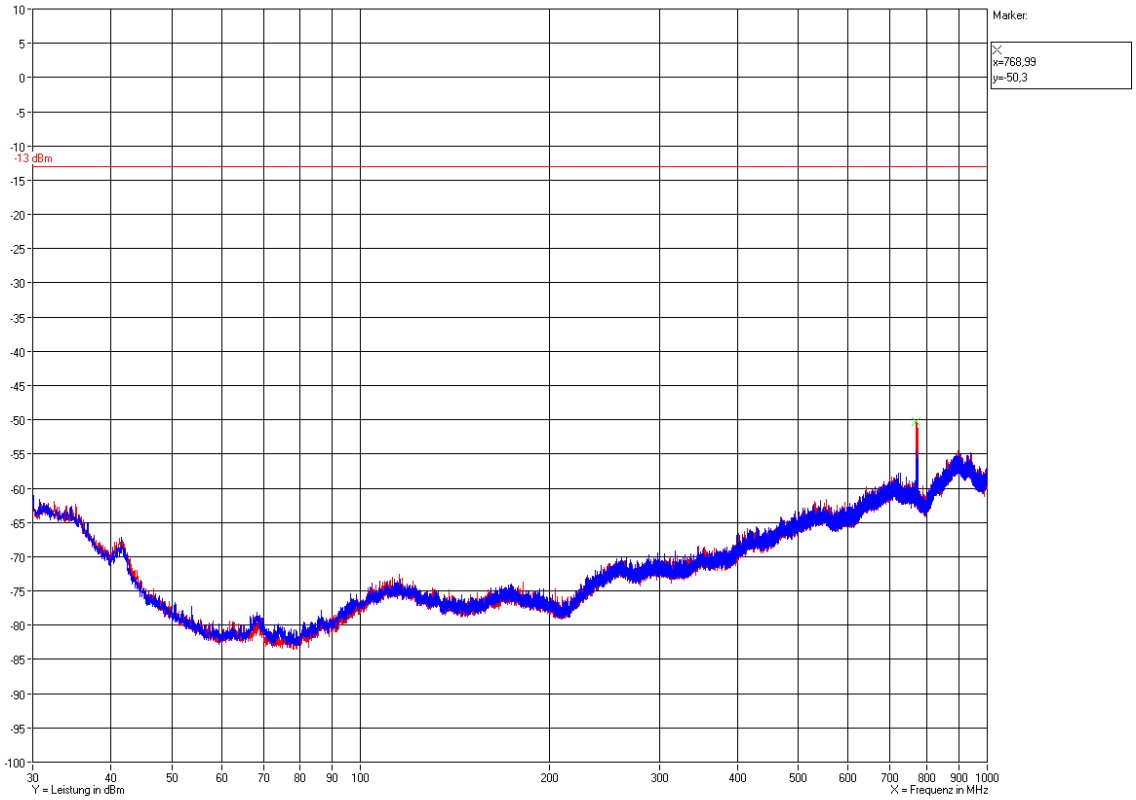

### 10.4.3 30 MHz to 1 GHz Downlink (Middle of all paths)

F1: 763 MHz; F2: 772 MHz; F3: 856.5 MHz; F4: 865.5 MHz

**Vertikal / Horizontal**

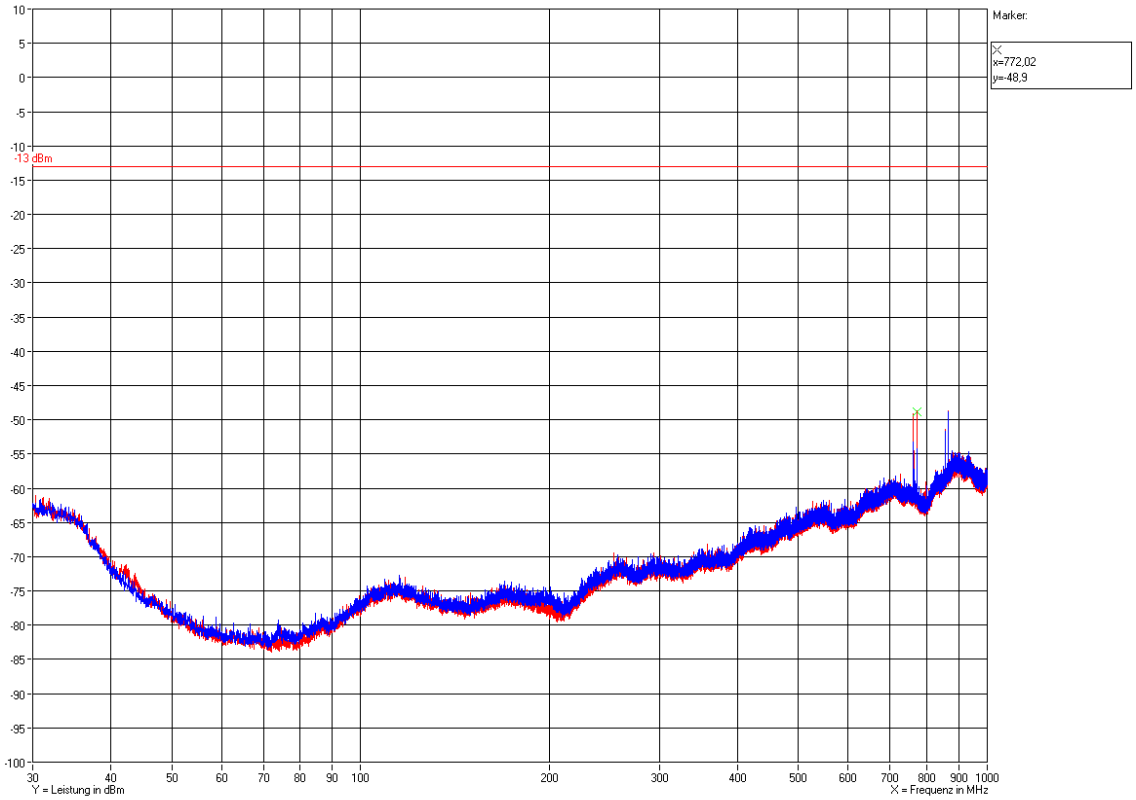

## 10.4.4 1 GHz to 21 GHz Downlink (Bottom – Middle – Top) Subpart H

Bottom: 769 MHz; Middle: 772 MHz; Top: 775 MHz

**Vertikal / Horizontal**

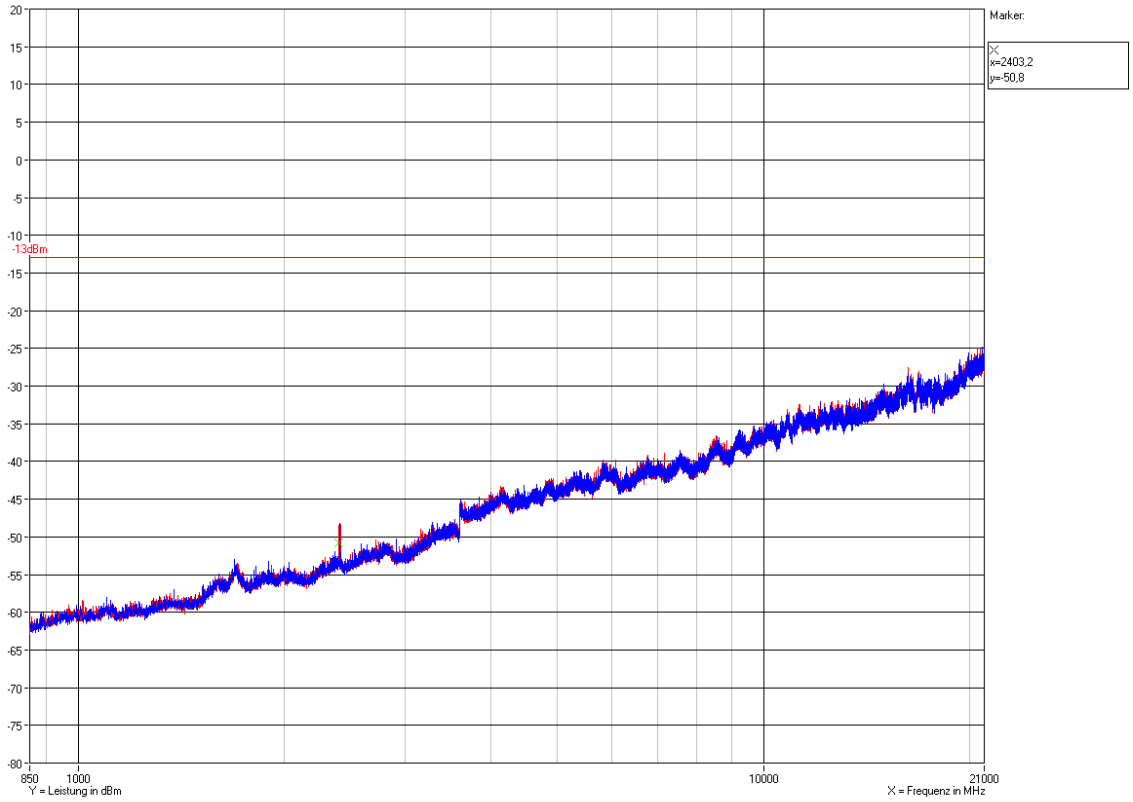

### 10.4.6 1 GHz to 22 GHz Downlink (Middle of all paths)

F1: 763 MHz; F2: 772 MHz; F3: 856.5 MHz; F4: 865.5 MHz

**Vertikal / Horizontal**

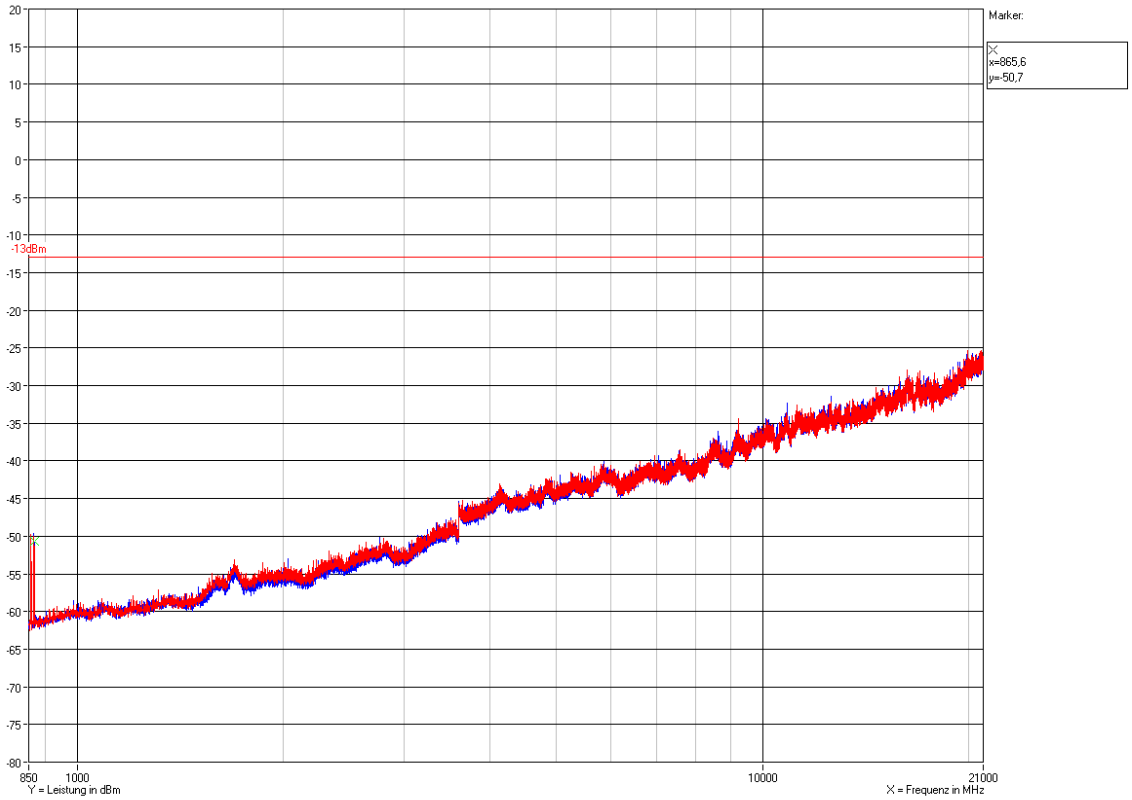


FEK / 12.08.2014

## The radiated spurious emission measurements have been passed!

# 11 History

| Revision | Modification | Date | Name |
|---|---|---|---|
| 01.00 | Initial report | 03.11.2014 | Zahlmann |
| | | | |
| | | | |
| | | | |

******** End of test report *******