ION®-U

ION-U L 7/80-85/17(E)P/19P

Manual

MF0200A5C

DISCLAIMER:

This document has been developed by CommScope, and is intended for the use of its customers and customer support personnel. The information in this document is subject to change without notice. While every effort has been made to eliminate errors, CommScope disclaims liability for any difficulties arising from the interpretation of the information contained herein. The information contained herein does not claim to cover all details or variations in equipment, nor to provide for every possible incident to be met in connection with installation, operation, or maintenance. This document describes the performance of the product under the defined operational conditions and does not cover the performance under adverse or disturbed conditions. Should further information be desired, or should particular problems arise which are not covered sufficiently for the purchaser's purposes, contact CommScope.

CommScope reserves the right to change all hardware and software characteristics without notice.

COPYRIGHT:

© Copyright 2016 CommScope Inc. All Rights Reserved.

This document is protected by copyright. No part of this document may be reproduced, stored in a retrieval system, or transmitted, in any form or by any means, electronic, mechanical photocopying, recording, or otherwise without the prior written permission of CommScope.

TRADEMARKS

All trademarks identified by ® or ™ are registered trademarks or trademarks, respectively, of CommScope. Names of products mentioned herein are used for identification purposes only and may be trademarks and / or registered trademarks of their respective companies.

Andrew Wireless Systems GmbH, 18-April-2016

TABLE OF CONTENTS

1. GENERAL 7

1.1. USED ABBREVIATIONS 7

1.2. HEALTH AND SAFETY 8

1.3. PROPERTY DAMAGE WARNINGS 8

1.4. COMPLIANCE 9

1.5. ABOUT COMMSCOPE 13

1.6. INTERNATIONAL CONTACT ADDRESSES FOR CUSTOMER SUPPORT 14

2. INTRODUCTION 16

2.1. PURPOSE 16

2.2. ION-U LOW POWER REMOTE UNITS 16

3. FUNCTIONAL DESCRIPTION 17

3.1. GENERAL 17

3.2. SISO AND MIMO OPERATION 18

3.3. ION-U LOW POWER RU PORTS 19

4. COMMISSIONING 21

4.1. LOW POWER RU MECHANICAL INSTALLATION 21
4.1.1. Health and Safety for mechanical installation 21
4.1.2. Property Damage Warnings for mechanical installation 21
4.1.3. Mounting bracket 22
4.1.3.1. Mount to a wall 22
4.1.3.2. Mount to a pole 23
4.1.4. Threaded pins 25
4.1.5. Wall mounting procedure – Single Unit (SISO) 26
4.1.6. Wall mounting procedure – Dual Units (MIMO) 28
4.1.7. Pole mounting procedure – SISO and MIMO 32

4.2. LOW POWER RU ELECTRICAL INSTALLATION 33
4.2.1. Health and Safety for electrical installation 33
4.2.2. Property Damage Warnings for electrical installation 33
4.2.3. Connections 35
4.2.4. Grounding (Earthing) 36
4.2.5. Mains power connection 37
4.2.6. Antenna connection 39
4.2.6.1. Cleaning procedure for RF cable connectors 40
4.2.6.2. Antenna cable connector assembly 44

4.2.7. Coupling probe 45
4.2.8. Expansion ports connections 46
4.2.9. Alarm port 46
4.2.10. Pwr/Ctrl port 47
4.2.11. Control connector RS-232 - Local Interface 47

4.3. LOW POWER RU OPTICAL INSTALLATION 48
4.3.1. Optical-fiber-cable connection - rules 48
4.3.2. Optical cable installation 50

4.4. ACCESSORY EQUIPMENT INSTALLATION – SPLICE BOX 53
4.4.1. SISO installation 54
4.4.2. MIMO installation 55

4.5. LOW POWER RU ALARMS 56
4.5.1. Bite and alarms 56
4.5.2. Handling of alarms 56
4.5.3. Status LED alarms 57

4.6. EXTERNAL ALARM INPUTS 58

4.7. TROUBLESHOOTING 59

5. LOW POWER RU MAINTENANCE 59

5.1. GENERAL 59

5.2. RU POWER SUPPLY REPLACEMENT 60

6. APPENDIX 64

6.1. ILLUSTRATIONS 64

6.2. SPECIFICATIONS 66

6.3. SPARE PARTS 66

7. LIST OF CHANGES 66

8. INDEX 67

FIGURES AND TABLES

figure 3-2 Remote Unit, SISO 18
figure 3-3 Remote Unit, MIMO two units paired 18
figure 3-4 One RU one EU one antenna 18
figure 3-5 Two RUs one EU two antennas 19
figure 3-6 RU connectors and Status LED 19
figure 4-1 Mounting bracket 22
figure 4-2 Pole-mounting kit 4" to 18" 24
figure 4-3 Pole-mounting kit 40” 24
figure 4-4 RU threaded pin power supply side 25
figure 4-5 RU threaded pin narrow side 25
figure 4-6 Place RU onto wall mounting bracket – single mount 26
figure 4-7 Install M6x12 screws and washers for single mount 27
figure 4-8 Attach M6 nut to threaded pins for single mount 27
figure 4-9 Completed SISO RU mount 28
figure 4-10 1st RU placed on wall mounting bracket - MIMO 29
figure 4-11 Install M6x12 screws and washers 29
figure 4-12 Attach M6 nut to threaded pins 30
figure 4-13 2nd RU on wall mounting bracket 30
figure 4-14 Install M6x12 screws and washers 2nd RU 31
figure 4-15 Attach M6 nut to threaded pins for 2nd RU 31
figure 4-16 Completed MIMO RU mount 32
figure 4-17 Grounding bolts 36
figure 4-18 Grounding bolt, schematic view 36
figure 4-19 AC power cable 37
figure 4-20 DC power cable 37
figure 4-21 Vdc/100 power cable 38
figure 4-22 Connect mains plug 39
figure 4-23 Antenna connection 45
figure 4-24 Expansion ports 46
figure 4-25 Alarm connector 46
figure 4-26 Pwr/Ctrl connector 47
figure 4-27 RS-232 connector 47
figure 4-28 Remove optics cover 50
figure 4-29 Remove sealing nut 51
figure 4-30 Split-seal and clamp jacket 51
figure 4-31 Optical cables connected 52
figure 4-32 Place cables into split-seal 52
figure 4-33 Optical cable installed 53
figure 4-34 Alarm triggering 56
figure 5-1 Disconnect mains power 60
figure 5-2 RU power supply location 61
figure 5-3 8 RU power supply screws 61
figure 5-4 RU power supply with cables 61
figure 5-5 RU power supply input cable 62
figure 5-6 RU power supply output cable 62
figure 5-7 RU with power supply removed 62
figure 5-8 RU insert power supply 63

figure 5-9 Reconnect mains power 63
figure 6-1 ION-U Low Power RU mounting bracket 64
figure 6-2 ION-U Low Power Unit dimensions 64
figure 6-3 Installation drawing of ION-U L Unit SISO 65
figure 6-4 Installation drawing of ION-U L Unit MIMO 65

table 1-1 List of international contact addresses 15
table 4-1 Specified torques 22
table 4-2 ION-U Low Power RU connectors - description 35
table 4-3 AC power cable 37
table 4-4 DC power cable 37
table 4-5 Vdc/100 power cable 38
table 4-6 Alarm connector 46
table 4-7 Pwr/Ctrl connector 47
table 4-8 RS-232 connector, pin assignment 47
table 4-9 Status LED alarms 58

1. General

1.1. Used Abbreviations

AC/DC	Alternating current / Direct Current
ALC	Automatic Level Control
BITE	Built-In Test Equipment
BTS	Base Transceiver Station
CDMA	Code Division Multiple Access
CE	"Conformité Européenne" ("European Conformity")
CPD	Channel Power Detection
DL	Downlink
DoC	Declaration of Conformity
EP	Extension Port
ESD	Electrostatic Discharge
EU	Extension Unit
GSM	Global System for Mobile Communication
GND	Ground (Earth)
GUI	Graphical User Interface
ICP3	Intercept Point 3rd order
ID No	Identification Number
ION	Intelligent Optical Network
LED	Light Emitting Diode
LMT	Local Maintenance Terminal
LTE	Long Term Evolution
MIMO	Multiple Input Multiple Output
MS	Mobile Station
MU	Main Unit
NF	Noise Figure
OMC	Operations and Maintenance Center
OTRx	Optical Transceiver = SRMU (Subrack Master Unit)
PDU	Power Distribution Unit
PIM	Passive Intermodulation
P_{in}	Input power
P_{out}	Output power
PSU	Power Supply Unit
Rev	Revision
RF	Radio Frequency
RU	Remote Unit
RX	Receiver
SISO	Single Input Single Output
SNMP	Simple Network Management Protocol
TX	Transmitter
UL	Uplink
UMTS	Universal Mobile Telecommunication System
UPS	Uninterruptible Power Supply
VSWR	Voltage Standing Wave Ratio
WCDMA	Wideband Code Division Multiple Access
WDM	Wavelength Division Multiplex
XML	Extensible Markup Language

1.2. Health and Safety

1. **Danger**: **Electrical hazard. Danger of death or fatal injury from electrical current. Obey all general and regional installation and safety regulations relating to work on high voltage installations, as well as regulations covering correct use of tools and personal protective equipment.**

2. **Danger: Electrical hazard. Danger of death or fatal injury from electrical current inside the unit in operation. Before opening the unit, disconnect mains power.**

3. **Caution:** Laser radiation. Risk of eye injury in operation. Do not stare into the beam; do not view it directly or with optical instruments.

4. **Caution:** High frequency radiation in operation. Risk of health hazards associated with radiation from the unit's inner conductor of the antenna port(s). Disconnect mains before connecting or replacing antenna cables.

5. **Caution:** High frequency radiation in operation. Risk of health hazards associated with radiation from the antenna(s) connected to the unit. Implement prevention measures to avoid the possibility of close proximity to the antenna(s) while in operation.

1.3. Property Damage Warnings

1. **Attention:** Due to power dissipation, the Remote Unit may reach a very high temperature. Do not operate this equipment on or close to flammable materials. Use caution when servicing the unit.

2. **Attention:** Only authorized and trained personnel are allowed to open the unit and get access to the inside.

3. **Notice:** Although the unit is internally protected against overvoltage, it is strongly recommended to ground (earth) the antenna cables close to the antenna connectors of the unit for protection against atmospheric discharge. In areas with strong lightning, it is strongly recommended to install additional lightning protection.

4. **Notice**: ESD precautions must be observed. Before commencing maintenance work, use the available grounding (earthing) system to connect ESD protection measures.

5. **Notice:** Only suitably qualified personnel are allowed to work on this unit and only after becoming familiar with all safety notices, installation, operation and maintenance procedures contained in this manual.

6. **Notice:** Keep operating instructions within easy reach and make them available to all users.

7. **Notice:** Read and obey all the warning labels attached to the unit. Make sure that all warning labels are kept in a legible condition. Replace any missing or damaged labels.

8. **Notice:** Only license holders for the respective frequency range are allowed to operate this unit.

9. **Notice**: Make sure the repeater settings are correct for the intended use (refer to the manufacturer product information) and regulatory requirements are met. Do not carry out any modifications or fit any spare parts, which are not sold or recommended by the manufacturer.

1.4. Compliance

1. **Notice:** For installations which have to comply with European EN50385 exposure compliance requirements, the following Power Density limits/guidelines (mW/cm²) according to ICNIRP are valid:
    - 0.2 for frequencies from 10 MHz to 400 MHz
    - F (MHz) / 2000 for frequencies from 400 MHz to 2 GHz
    - 1 for frequencies from 2 GHz to 300 GHz

2. **Notice:** For installations, which have to comply with FCC RF exposure requirements, the antenna selection and installation must be completed in a way to ensure compliance with those FCC requirements. Depending on the RF frequency, rated output power, antenna gain, and the loss between the repeater and antenna, the minimum distance D to be maintained between the antenna location and human beings is calculated according to this formula:

$$D_{[cm]} = \sqrt{\frac{P_{[mW]}}{4 * \pi * PD_{[mW/cm^2]}}}$$

where

- P (mW) is the radiated power at the antenna, i.e. the max. rated repeater output power in addition to the antenna gain minus the loss between the repeater and the antenna.
- PD (mW/cm²) is the allowed Power Density limit acc. to 47 CFR 1.1310 (B) for general population / uncontrolled exposures which is
    - F (MHz) / 1500 for frequencies from 300MHz to 1500MHz
    - 1 for frequencies from 1500MHz to 100,000MHz

RF exposure compliance may need to be addressed at the time of licensing, as required by the responsible FCC Bureau(s), including antenna co-location requirements of 1.1307(b)(3).

3. **Notice:** Installation of this equipment is in full responsibility of the installer, who has also the responsibility, that cables and couplers are calculated into the maximum gain of the antennas, so that this value, which is filed in the FCC Grant and can be requested from the FCC data base, is not exceeded. The industrial boosters are shipped only as a naked booster without any installation devices or antennas as it needs for professional installation.

4. **Notice:** For installations which have to comply with FCC/Industry Canada requirements:

   English:
   This device complies with FCC Part 15 and Industry Canada license exempt RSS standard(s). Operation is subject to the following two conditions: (1) this device may not cause interference, and (2) this device must accept any interference, including interference that may cause undesired operation of the device.

   This device complies with Health Canada's Safety Code. The installer of this device should ensure that RF radiation is not emitted in excess of the Health Canada's requirement. Information can be obtained at http: //www.hc-sc.gc.ca/ewh-semt/pubs/radiation/radio_guide-lignes_direct-eng.php.

   Changes or modifications not expressly approved by the party responsible for compliance could void the user's authority to operate the equipment.

   French:
   Cet appareil est conforme à FCC Partie15 d'Industrie Canada RSS standard exempts de licence (s). Son utilisation est soumise à Les deux conditions suivantes: (1) cet appareil ne peut pas provoquer d'interférences et (2) cet appareil doit accepter Toute interférence, y compris les interférences qui peuvent causer un mauvais fonctionnement du dispositif.

   Cet appareil est conforme avec Santé Canada Code de sécurité 6. Le programme d'installation de cet appareil doit s'assurer que les rayonnements RF n'est pas émis au-delà de l'exigence de Santé Canada. Les informations peuvent être obtenues:
   http://www.hc-sc.gc.ca/ewh-semt/pubs/radiation/radio_guide-lignes_direct-fra.php

   Les changements ou modifications non expressément approuvés par la partie responsable de la conformité pourraient annuler l'autorité de l'utilisateur à utiliser cet équipement.

5. **Notice:** Corresponding local particularities and regulations must be observed. For national deviations, please refer to the respective documents included in the manual CD that is delivered with the unit.

6. **Notice:** The unit complies with Overvoltage Category II. It also complies with the surge requirement according to EN 61000-4-5 (fine protection); however, installation of an additional medium (via local supply connection) and/or coarse protection (external surge protection) is recommended depending on the individual application in order to avoid damage caused by overcurrent.

   For Canada and US, components used to reduce the Overvoltage Category shall comply with the requirements of IEC 61643-series. As an alternative, components used to reduce the Overvoltage Category may comply with ANSI/IEEE C62.11, CSA Certification Notice No. 516, CSA C22.2 No. 1, or UL 1449. Suitability of the component for the application shall be determined for the intended installation.

7. **Note:** For a Class A digital device or peripheral:

   This equipment has been tested and found to comply with the limits for a Class A digital device, pursuant to part 15 of the FCC Rules. These limits are designed to provide reasonable protection against harmful interference when the equipment is operated in a commercial environment. This equipment generates, uses, and can radiate radio frequency energy and, if not installed and used in accordance with the instruction manual, may cause harmful interference to radio communications. Operation of this equipment in a residential area is likely to cause harmful interference in which case the user will be required to correct the interference at his own expense.

8. **Note:** This unit complies with European standard EN60950.

Equipment Symbols Used / Compliance

Please observe the meanings of the following symbols used in our equipment and the compliance warnings:

Symbol	Compliance	Meaning / Warning
---	**FCC**	For industrial (Part 20) signal booster: WARNING: This is NOT a CONSUMER device. It is designed for installation by FCC LICENSEES and QUALIFIED INSTALLERS. You MUST have an FCC LICENSE or express consent of an FCC Licensee to operate this device. Unauthorized use may result in significant forfeiture penalties, including penalties in excess of $100,000 for each continuing violation.
!	**CE**	Alert sign to R&TTE To be sold exclusively to mobile operators or authorized installers – no harmonized frequency bands, operation requires license. Intended use: EU and EFTA countries
CE 0700		Indicates conformity with the R&TTE directive 1999/5/EC certified by the notified body no. 0700.

Note: The Manufacturer's rated output power of this equipment is for single carrier operation. For situations when multiple carrier signals are present, the rating would have to be reduced by 3.5 dB, especially where the output signal is reradiated and can cause interference to adjacent band users. This power reduction is to be by means of input power or gain reduction and not by an attenuator at the output of the device.

1.5. About CommScope

CommScope is the foremost supplier of one-stop, end-to-end radio frequency (RF) solutions. Part of the *CommScope* portfolio are complete solutions for wireless infrastructure from top-of-the-tower base station antennas to cable systems and cabinets, RF site solutions, signal distribution, and network optimization. For patents see www.cs-pat.com.

CommScope has global engineering and manufacturing facilities. In addition, it maintains field engineering offices throughout the world.

Andrew Wireless Systems GmbH based in Buchdorf/ Germany, which is part of *CommScope*, is a leading manufacturer of coverage equipment for mobile radio networks, specializing in high performance, RF and optical repeaters. Our optical distributed networks and RF repeater systems provide coverage and capacity solution for wireless networks in both indoor installations and outdoor environments, e.g. tunnels, subways, in-trains, airport buildings, stadiums, skyscrapers, shopping malls, hotels and conference rooms.

Andrew Wireless Systems GmbH operates a quality management system in compliance with the requirements of ISO 9001 and TL 9000. All equipment is manufactured using highly reliable material. To maintain highest quality of the products, comprehensive quality monitoring is conducted at all fabrication stages. Finished products leave the factory only after a thorough final acceptance test, accompanied by a test certificate guaranteeing optimal operation.

This product meets the requirements of the R&TTE directive and the Declaration of Conformity (DoC) itself. A current version of the CE DoC is included in this manual CD delivered *. Any updated version of the DoC is available upon request from the local sales offices or directly from *CommScope* via the local Customer Support at one of the addresses listed in the following chapter.

According to the DoC, our "CE"-marked equipment can be used in all member states of the European Union.

Note: **Exceptions of and national deviations from this intended use may be possible. To observe corresponding local particularities and regulations, please refer to the respective documents (also in national language) which are included in the manual CD delivered.**

* In case the Declaration of Conformity (DoC) for the product was not included in the manual CD delivered, it is available upon request from the local sales offices or directly from *CommScope at one of the addresses listed in the following chapter*.

To make the most of this product, we recommend you carefully read the instructions in this manual and commission the system only according to these instructions.

For technical assistance and support, please also contact the local office or *CommScope* directly at one of the addresses listed in the following chapter.

1.6. International Contact Addresses for Customer Support

AMERICAS

Canada	
CommScope Canada	
Mail	505 Consumers Road, Suite 803 Toronto M2J 4V8, Canada
Phone	+1-905-878-3457 (Office) +1-416-721-5058 (Cell)
Fax	+1-905-878-3297
E-mail	wisupport@commscope.com

United States	
Andrew LLC, A CommScope Company	
Mail	620 North Greenfield Parkway Garner, NC 27529, U.S.A.
Phone	+1-888-297-6433
Fax	+1-919-329-8950
E-mail	wisupport@commscope.com

Caribbean & South American Region	
CommScope Cabos do Brasil Ltda.	
Mail	CALA Tech Support for *Distributed Coverage & Capacity Solutions (DCCS) products*: Rua Guaporanga, 49 Praça Seca – Rio de Janeiro – RJ ZIP: 21320-180, Brazil
Phone	+1-815-546-7154 (Cell) +55-15-9104-7722 (Office)
Fax	+ 55-15-2102-4001
E-mail	wisupport@commscope.com

Caribbean & Central American Region	
CommScope Mexico S.A. de C.V.	
Mail	CALA Tech Support for *Distributed Coverage & Capacity Solutions (DCCS) products*: Av. Insurgentes Sur 688, Piso 6 Col. Del Valle, CP: 03100 Mexico City, Mexico
Phone	+52-55-1346-1900 (Office)
Fax	+52-55-1346-1901
E-mail	wisupport@commscope.com

APAC

China, India and Rest of Asia	
Andrew International Corporation	
Mail	Room 915, 9/F Chevalier Commercial Centre 8 Wang Hoi Rd Kowloon Bay, Hong Kong
Phone	+852-3106-6100
Fax	+852-2751-7800
E-mail	wisupport.China@commscope.com

Australia & New Zealand	
Andrew Corporation (Australia) Pty Ltd.	
Mail	Unit 1 153 Barry Road Campbellfield VIC 3061, Australia
Phone	+613-9300-7969
Fax	+613-9357-9110
E-mail	wisupport.Australia@commscope.com

Africa & Middle East

Middle East & North Africa	
CommScope Solutions International Inc. (Branch)	
Mail	PO Box 48 78 22 Unit 3206, Floor 32, Jumeirah Business Center 5, Jumeirah Lakes Towers, Dubai, United Arab Emirates
Phone	+971 4 390 09 80
Fax	+971 4 390 86 23
E-mail	wisupport@commscope.com

South Africa	
Andrew Wireless Solutions Africa (PTY) LTD	
Mail	11 Commerce Crescent West Eastgate, Sandton PO Box 786117 Sandton 2146 South Africa
Phone	+ 27 11-719-6000
Fax	+ 27 11-444-5393
E-mail	wisupport@commscope.com

EUROPE

United Kingdom	
Andrew Wireless Systems UK Ltd	
Mail	Unit 15, Ilex Building Mulberry Business Park Fishponds Road Wokingham Berkshire RG41 2GY, England
Phone	+44-1189-366-792
Fax	+44-1189-366-773
E-mail	wisupport.uk@commscope.com

Germany	
Andrew Wireless Systems GmbH	
Mail	Industriering 10 86675 Buchdorf Germany
Phone	+49-9099-69-0
Fax	+49-9099-69-930
E-mail	wisupport@commscope.com

Austria	
Andrew Wireless Systems (Austria) GmbH	
Mail	Weglgasse 10 2320 Wien-Schwechat Austria
Phone	+43-1706-39-99-10
Fax	+43-1706-39-99-9
E-mail	wisupport.austria@commscope.com

Italy	
CommScope Italy S.r.l., Faenza, Italy	
Mail	Via Mengolina, 20 48018 Faenza (RA) Italy
Phone	+39-0546-697111
Fax	+39-0546-682768
E-mail	wisupport.italia@commscope.com

Czech Republic	
CommScope Solutions Czech Republic C-Com, spol. s r.o	
Mail	U Moruší 888 53006 Pardubice, Czech Republic
Phone	+49 871 9659171 (Office) +49 171 4001166 (Mobile)
Fax	+49 871 9659172
E-mail	wisupport@commscope.com

Scandinavia	
Andrew Norway (AMNW)	
Mail	P.O. Box 3066 Osloveien 10 Hoenefoss 3501 Norway
Phone	+ 47 32-12-3530
Fax	+ 47 32-12-3531
E-mail	wisupport@commscope.com

France	
CommScope France	
Mail	Immeuble Le Lavoisier 4, Place des Vosges 92052 Courbevoie, France
Phone	+33-1 82 97 04 00
Fax	+33-1 47 89 45 25
E-mail	wisupport@commscope.com

Switzerland	
CommScope Wireless Systems AG	
Mail	Tiergartenweg 1 CH-4710 Balsthal Switzerland
Phone	+41-62-386-1260
Fax	+41-62-386-1261
E-mail	wisupport.ch@commscope.com

Iberia Region - Spain & Portugal	
Andrew España S.A. A CommScope Company	
Mail	Avda. de Europa, 4 - 2ª pta. Parque Empresarial de la Moraleja Alcobendas, Madrid 28108, Spain
Phone	+34-91-745-20 40
Fax	+34-91-661-87 02
E-mail	wisupport.iberia@commscope.com

table 1-1 List of international contact addresses

2. Introduction

2.1. Purpose

Mobile telephone and public safety systems transmit signals in two directions between base transceiver station (BTS) and mobile stations (MS) within the signal coverage area to carry voice and data traffic.

If weak signal transmissions occur within the coverage area because of indoor applications, topological conditions or distance from the transmitter, extension of the transmission range can be achieved by means of an optical distributed antenna system (DAS).

Office buildings, sports arenas, college campuses, industrial parks, and other areas of high demand require the specialized capacity boost that an optical DAS can provide to meet increasing customer demands for voice and data.

An optical DAS contains optical Master Units and a sufficient number of Remote Units to provide the necessary coverage. The number of the Remote Units depends on the coverage requirements of the DAS. The Remote Units are connected to the Master Unit with optical links.

The Master Unit is the connection to the Base Transceiver Stations. The configuration of a Master Unit depends on the number of the Remote Units and the frequency range.

RF signals are transported to and from the Remote Units via optical fibers.

The ION-U system includes high power and low power Remote Units designed to meet the specific requirements of a given DAS. An ION-U Master Unit can support both high power and low power RUs simultaneously.

2.2. ION-U Low Power Remote Units

The ION-U Low Power Remote Units are scalable and integrated with up to:

- 5-band (Cell700, LMR800, Cell850, PCS1900, AWS-3 1700/2100) or
- 6-band with additional Extension Unit (WCS2300 MHz)

SISO capability. Two RUs can be operated as a pair for MIMO operation. These units are compatible with analog, GSM, EDGE, IS-95, CDMA2000, EVDO, W-CDMA, HSDPA, LTE and iDEN modulation standards. These Remote Units feature independent downlink and uplink gain adjustments and an integrated channel power detector for in-band spectrum and PIM analysis and end-to-end auto leveling.

3. Functional Description

3.1. General

In the Downlink (DL) path, the Remote Unit provides:

- Optical to RF conversion of the input optical signal
- Automatic Gain Control (AGC) of each converted signal to compensate for optical losses
- RF amplification of the converted RF signal for transmission while maintaining a good signal-to-noise ratio
- RF filtering to reject spurious emissions

In the Uplink (UL) path, the Remote Unit provides:

- RF amplification to boost the signals received by the antennas to maintain a good signal-to-noise ratio
- RF filtering to reject spurious emissions
- Automatic Level Control (ALC) to adjust the RF signal level to meet blocking requirements
- RF-to-optical conversion of the signal, which is convey to the output optical port

3.2. SISO and MIMO Operation

The architecture of the ION-U low power supports both SISO and MIMO operation. MIMO operation is achieved by pairing two RUs.
The following figures show views of a single Remote Unit for SISO applications and two Remote Units paired for MIMO applications.

figure 3-1 Remote Unit, SISO

figure 3-2 Remote Unit, MIMO two units paired

The ION-U EU L 23/23 Extension unit with integrated antenna port combiner together with ION-U L 7/80-85/17(E)P/19P allows for further options.

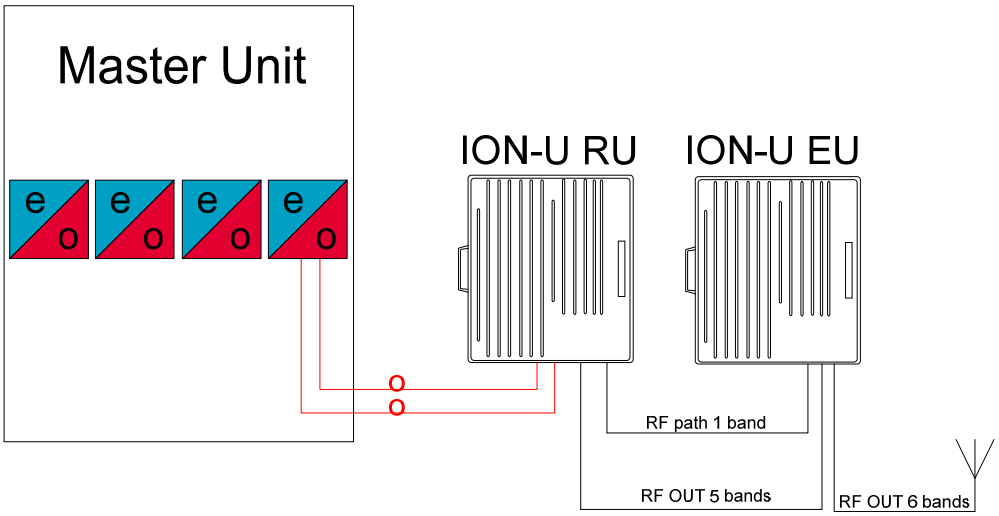

figure 3-3 One RU one EU one antenna

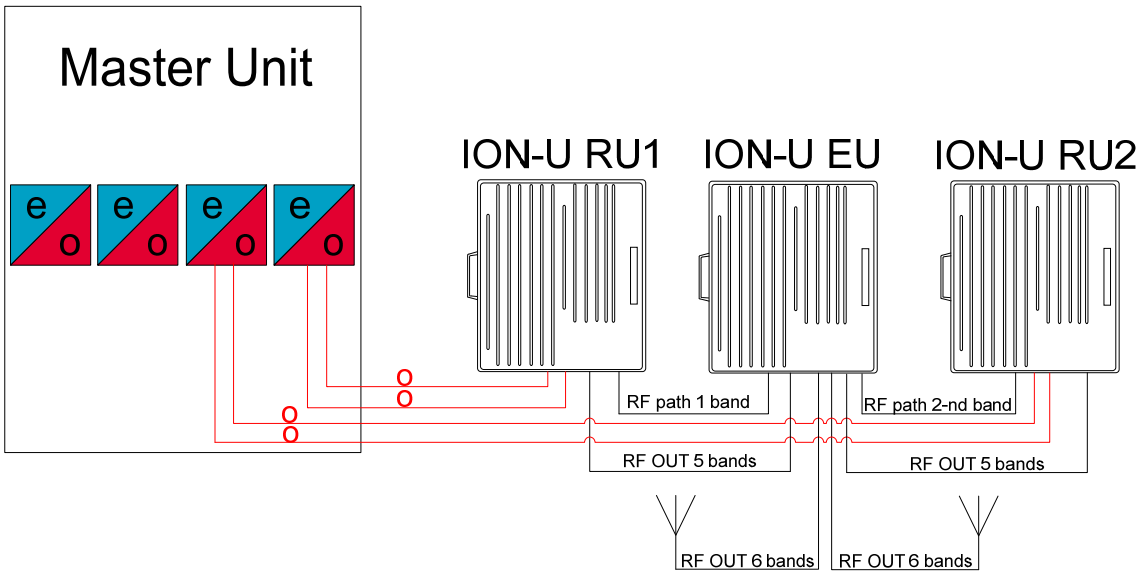

figure 3-4 Two RUs one EU two antennas

3.3. ION-U Low Power RU Ports

The RF, optical, mains power, alarm, power control, and expansion ports are located on the bottom of the RU.

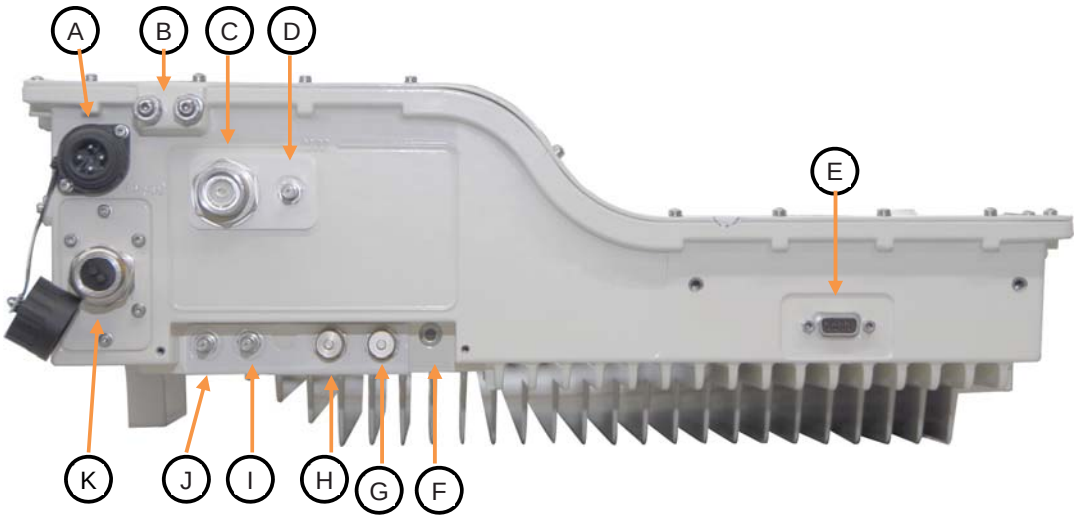

A	Mains power connector	G	Pwr/Ctrl connector
B	Grounding (earthing) bolts	H	Alarm connector
C	RF antenna port	I	Expansion UL port
D	Probe	J	Expansion DL port
E	Local Port RS-232	K	Optical ports
F	Status LED		

figure 3-5 RU connectors and Status LED

Mains Connector

The RU receives its power through the Mains connector Ⓐ. The type of connector is dependent on the RU model. A 4-pin Amphenol connector is used for AC models and standard DC models. A 7-pin Amphenol connector is used for DC models powered by a dual cable supply.

Antenna Port

The RU has one duplex 4.3-10 (1-st generation RUs: N-female) antenna port Ⓒ for transmitting and receiving signals to and from distributed antennas. This RF port can be connected directly to an antenna (i.e. using RF jumper cables) or through splitters, allowing additional antennas to be fed by the RU.

Probe

This port Ⓓ is used as measurement probe to antenna port.

Local Port RS-232

The RS-232 port Ⓔ is standard DB-9 female connector used for external modem communication with an optional Extension Unit.

Status LED

The status LED Ⓕ provides a visual warning of an alarm condition. The color of the LED indicates the severity of the alarm.

Pwr/Ctrl Connector

The Pwr/Ctrl connector Ⓖ supports an optional fan unit. The RU provides power and fan speed control to the fan unit and receives alarms from it through this 7-pin Binder connector.

Alarm Connector

The RU has two alarm relay inputs that can be used to monitor and report alarms from external devices. The alarm connector Ⓗ is a 5-pin Binder connector.

Expansion Ports

The Expansion UL Ⓘ and Expansion DL ports Ⓙ are QMA female connectors that are used to connect to a CommScope EU to provide additional bands.

Optical Ports

The LC-APC optical connectors Ⓚ are used to send and receive the signals between the RU and the Master Unit's OTRx modules.

- The DL optical port receives downlink signals from the MU OTRx.
- The UL optical port transmits uplink signals to the MU OTRx.

4. Commissioning

Read and observe the health and safety and property damage warnings as well as the description carefully to avoid mistakes and proceed step-by-step as described.

- **Attention**: Do not operate the Remote Unit without terminating the antenna connectors. The antenna connectors may be terminated by connecting them to their respective antennas or to a dummy load.
- **Notice**: Only qualified personnel should carry out the electrical, mechanical, commissioning, and maintenance activities that require the unit to be powered on when open.
- When opening the Remote Unit do not damage the warranty labels on the internal devices. The warranty is void if the seals are broken.
- Ensure that all connections have been performed according to chapter *4.2.3 Connections*.

Unless otherwise agreed to in writing by CommScope, CommScope's general limited product warranty (http://www.commscope.com/Resources/Warranties/) shall be the warranty governing the Remote Units, including the installation, maintenance, usage and operation of the Remote Units.

4.1. Low Power RU Mechanical Installation

4.1.1. Health and Safety for mechanical installation

Read and observe chapter 1.2 Health and Safety.

1. **Caution:** Risk of injury by the considerable weight of the unit falling. Ensure there is adequate manpower to handle the weight of the system.
2. **Caution:** Risk of serious personal injury by equipment falling due to improper installation. The installer must verify that the supporting surface will safely support the combined load of the electronic equipment and all attached hardware and components. The screws and dowels (wall anchors) used should also be appropriate for the structure of the supporting wall.

4.1.2. Property Damage Warnings for mechanical installation

1. **Attention:** Do not install the unit in a way or at a place where the specifications outlined in the Environmental and Safety Specifications leaflet of the supplier are not met.
2. **Attention:** Due to power dissipation, the unit may reach a very high temperature. Ensure sufficient airflow for ventilation.
3. **Notice:** Exceeding the specified load limits may cause the loss of warranty.
4. **Notice:** When connecting and mounting the cables (RF, optical, mains, ...) ensure that no water can penetrate into the unit through these cables.

5. **Notice:** If any different or additional mounting material is used, ensure that the mounting remains as safe as the mounting designed by the manufacturer. The specifications for stationary use of the Unit must not be exceeded. Ensure that the static and dynamic strengths are adequate for the environmental conditions of the site. The mounting itself must not vibrate, swing or move in any way that might cause damage to the Unit.

Specified torques must be observed for certain mounting procedures according to the following table:

Type	***Pins***	***Hex nuts***	***Screws***
Thread	M 6	M 6	M6
Specified torques	3.3 N-m	3.3 N-m	3.3 N-m

table 4-1 Specified torques

4.1.3. Mounting bracket

4.1.3.1. Mount to a wall

1. Check the suitability of the wall-mounting kit and the wall.

2. Install the mounting bracket using 4 M6 screw anchors (not included*) or suitable lag bolts according to the drilling layout. Confirm that the bracket is securely fastened to the wall. Installer must verify that the supporting surface will safely support the combined load of the electronic equipment and all attached hardware and components.

* The M6 screw anchors are not included as part of the RU delivery because the suitable type depends on the on-site conditions (wall structure and materials). Use screw anchors that are appropriate for the mounting surface.

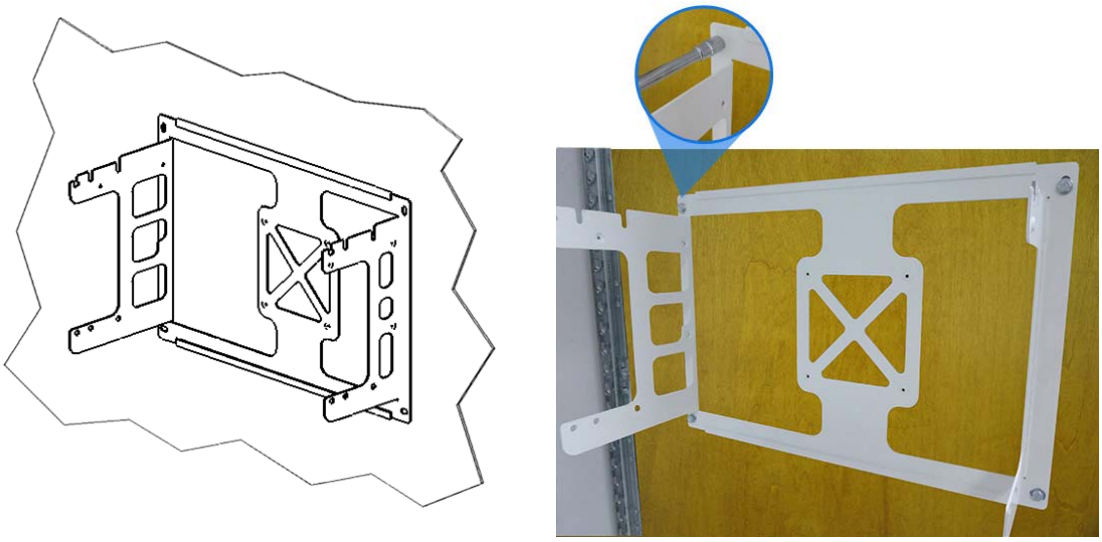

figure 4-1 Mounting bracket

4.1.3.2. Mount to a pole

Mounting kits are available for poles from 4“ to 18” (10.2 cm to 45.8 cm) and for 40” (1 m).

1. Mount the mounting bracket to the four screw pins of the two pole-mounting brackets with M6 plain washers (9), split lock washers (10) and self lock nuts (8).

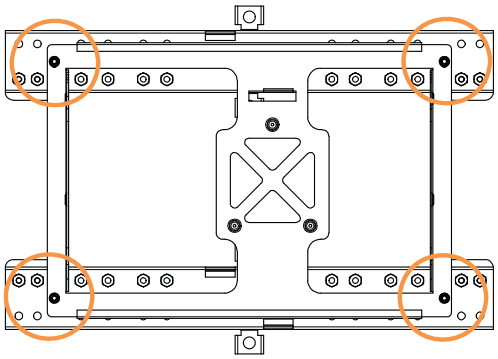

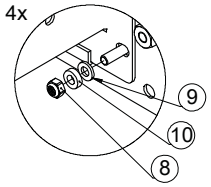

2. Screw a M8 nut (4) to one end of each of the eight threaded bolts and slide a plain washer (5) on the bolt.

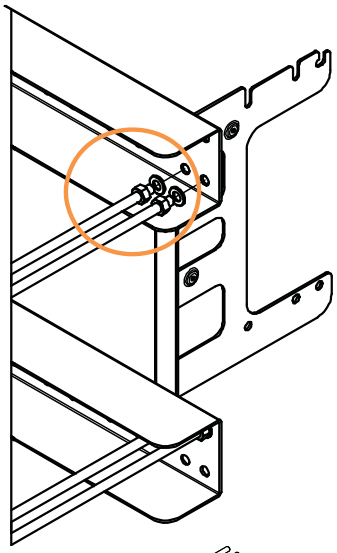

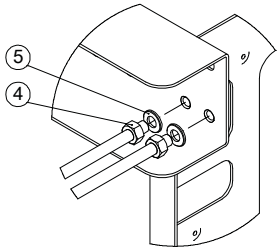

3. Screw the end of the threaded bolts (with the nut and washer) from the inner side to the welded nuts of the pole-mounting bracket. Use the nuts that allow to mount the mounting kit with the threaded bolts as close to the pole as possible. Lock the screwing by fastening the M8 nut.

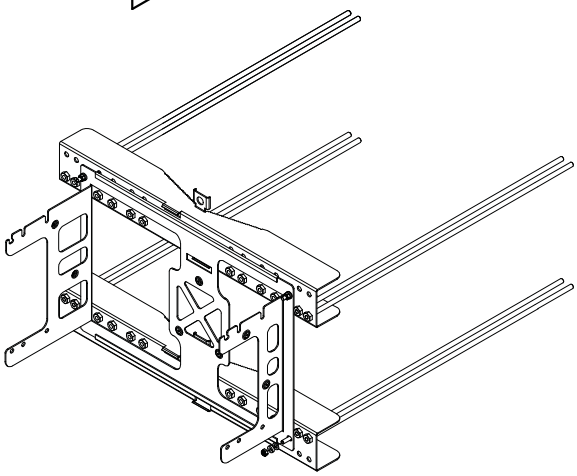

4. Mount the pole-mounting kit with the two brackets and M8 plain washers (5), split lock washers (6), and self lock nuts (7) to the pole.

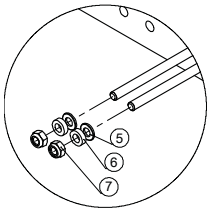

Take care to mount the brackets congruently and not at an angle.

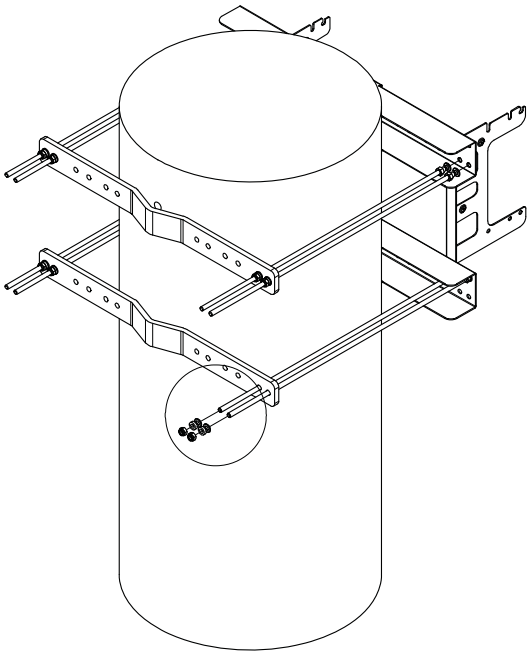

figure 4-2 Pole-mounting kit 4" to 18"

Mounting the 40” pole-mounting kit is similar, except:

- the pole-mounting bracket provides no screw pins, but the mounting bracket is fastened with four screws M8 x 25 (2) and M8 self lock nuts (3).
- the pole-mounting bracket provides no welded nuts but all the threaded bolts are mounted with M8 plain washers (7), split lock washers (6) and nuts.

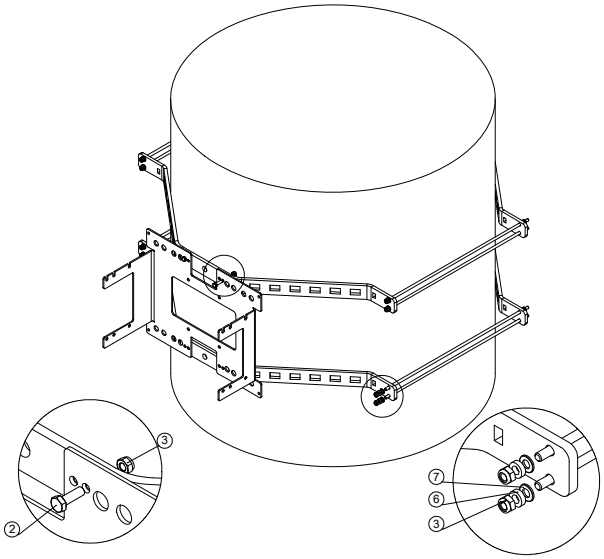

figure 4-3 Pole-mounting kit 40”

4.1.4. Threaded pins

1. Attach an M6 threaded pin to the unit by inserting it into the threaded hole adjacent to the power supply and turning it clockwise. Tighten the pin securely with a socket wrench.

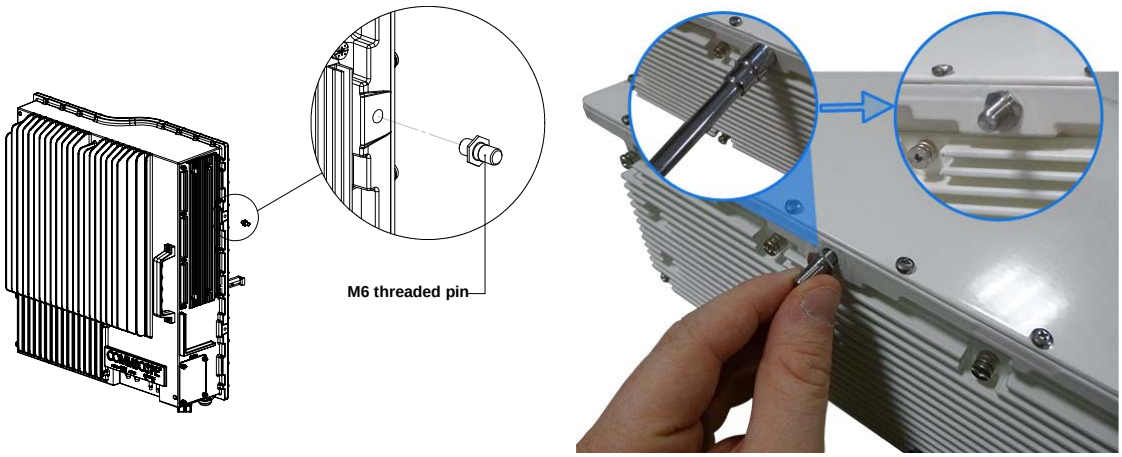

figure 4-4 RU threaded pin power supply side

2. Attach an M6 threaded pin to the nit by inserting it into the threaded hole above the handle and turning it clockwise. Tighten the pin securely with a socket wrench.

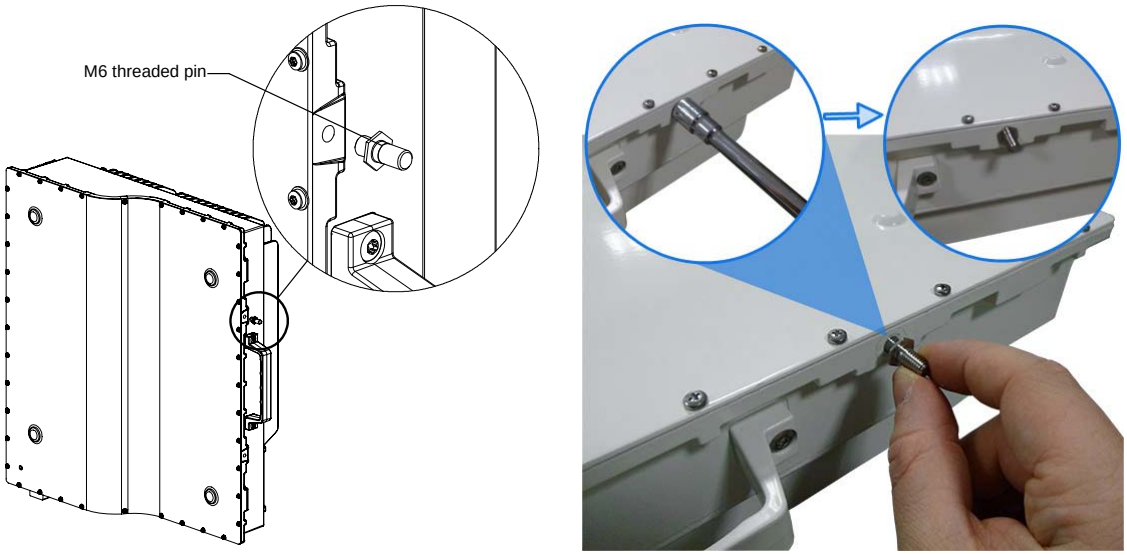

figure 4-5 RU threaded pin narrow side

4.1.5. Wall mounting procedure – Single Unit (SISO)

1. Follow the instructions for mounting the bracket and installing the threaded pins in *chapter 4.1.3.*
2. Install the unit on the wall-mounting bracket by lifting it into place and using both handles and lowering it down onto the bracket. The M6 pins must align with the slots in the bracket to support the unit.

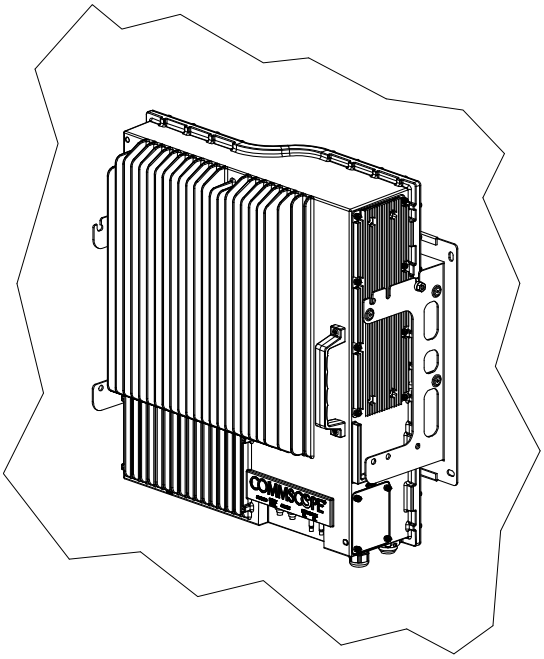

figure 4-6 Place RU onto wall mounting bracket – single mount

3. Fasten the lower section of the unit to the bracket using a washer and an M6x12 screw (on both sides). Slide a washer over each screw and then insert the screw and tighten it securely.

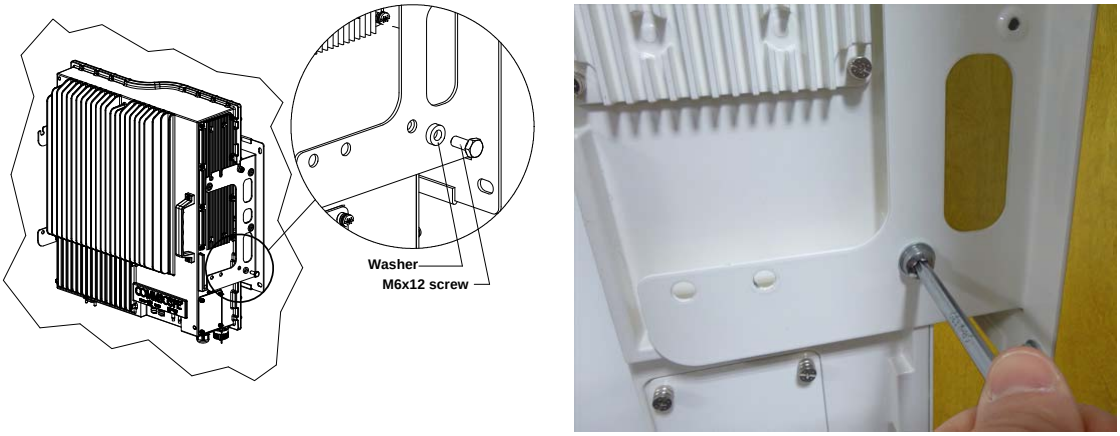

figure 4-7 Install M6x12 screws and washers for single mount

4. Fasten the unit to the bracket using a washer and M6 nut. Slide the washer over the threaded pins that you installed previously (chapter *4.1.3*) and then screw the nut onto the pins (on both sides) and tighten securely.

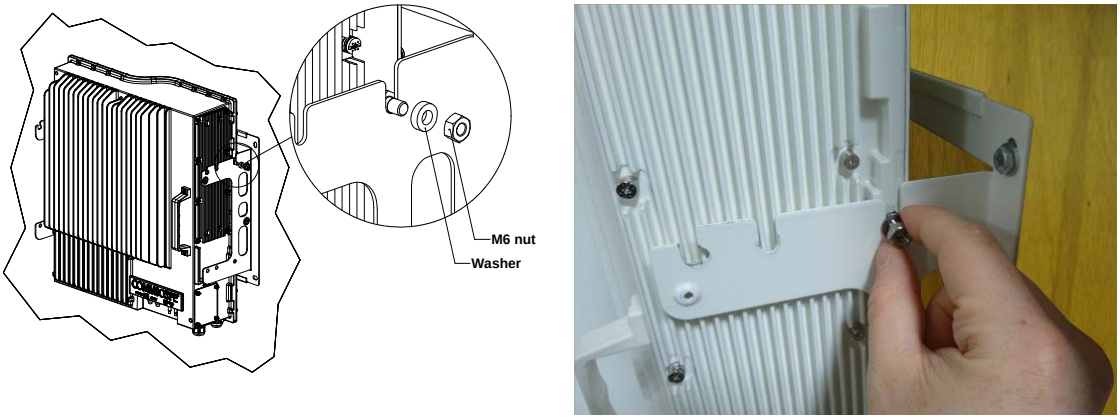

figure 4-8 Attach M6 nut to threaded pins for single mount

5. Confirm that all screws and nuts have been fastened and the unit is securely mounted to the wall.

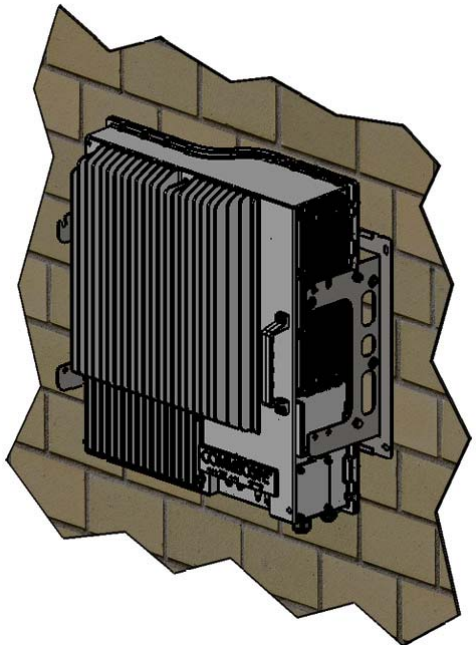

figure 4-9 Completed SISO RU mount

4.1.6. Wall mounting procedure – Dual Units (MIMO)

For MIMO operation, two LP RUs are mounted on a single wall bracket.

1. Follow the instructions for mounting the bracket and installing the threaded pins in *chapter 4.1.3*.

2. Install the first Remote Unit on the wall-mounting bracket by lifting the RU into place and lowering it down onto the bracket. The M6 pins must align with the slots in the bracket to support the RU. Note that the first RU is installed with the curved side facing you, which is the opposite of the installation procedure for SISO (one unit) mounting.

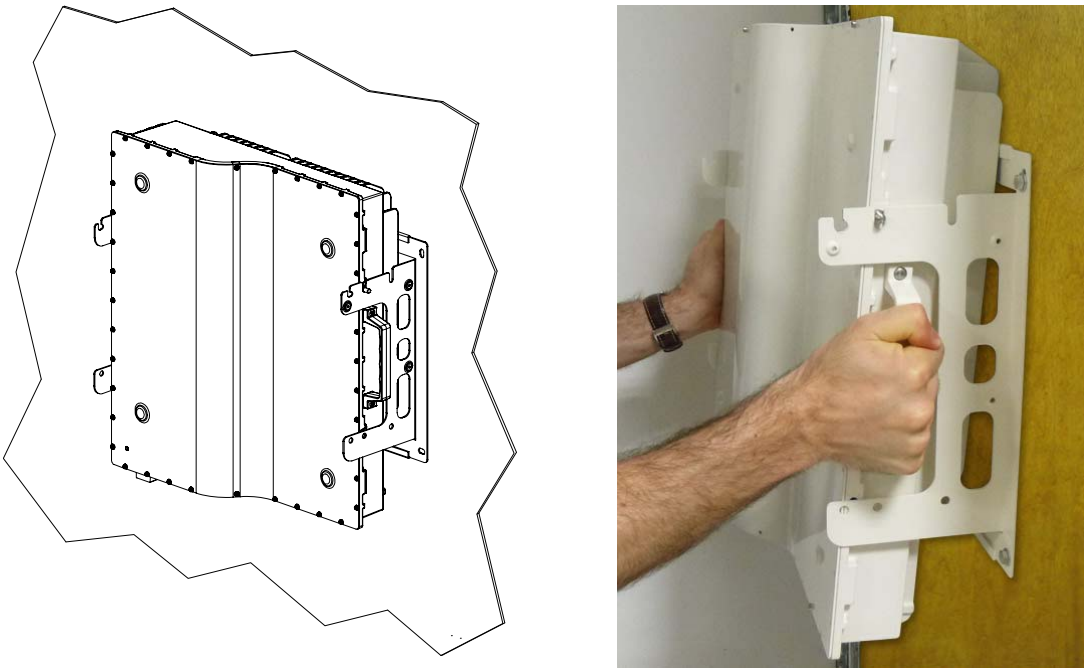

figure 4-10 1st RU placed on wall mounting bracket - MIMO

3. Fasten the lower section of the first RU to the bracket using a washer and an M6x12 screw (on both sides). Slide a washer over each screw and then insert the screw and tighten it securely.

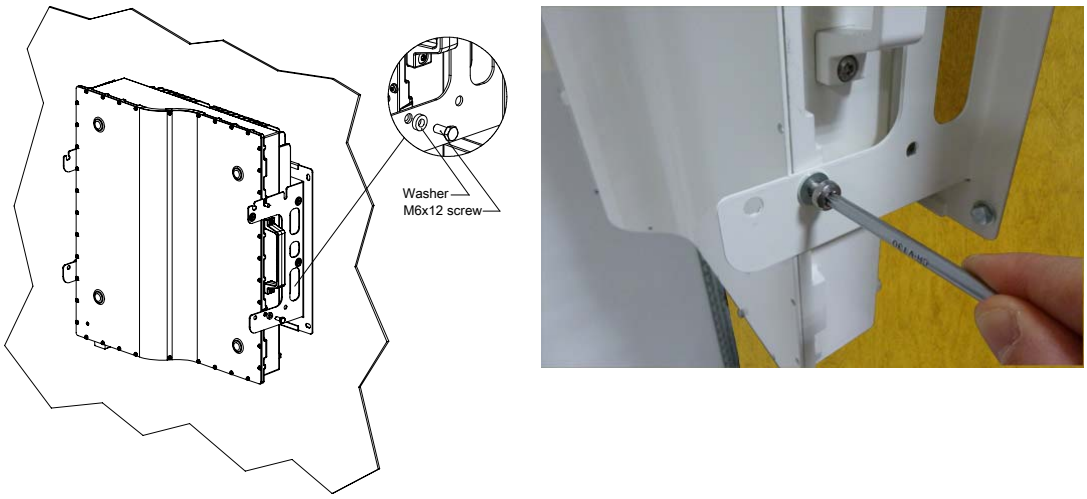

figure 4-11 Install M6x12 screws and washers

4. Fasten the RU to the bracket using a washer and M6 nut. Slide the washer over the threaded pins that you installed previously (chapter *4.1.3*) and then screw the nut onto the pins (on both sides) and tighten securely.

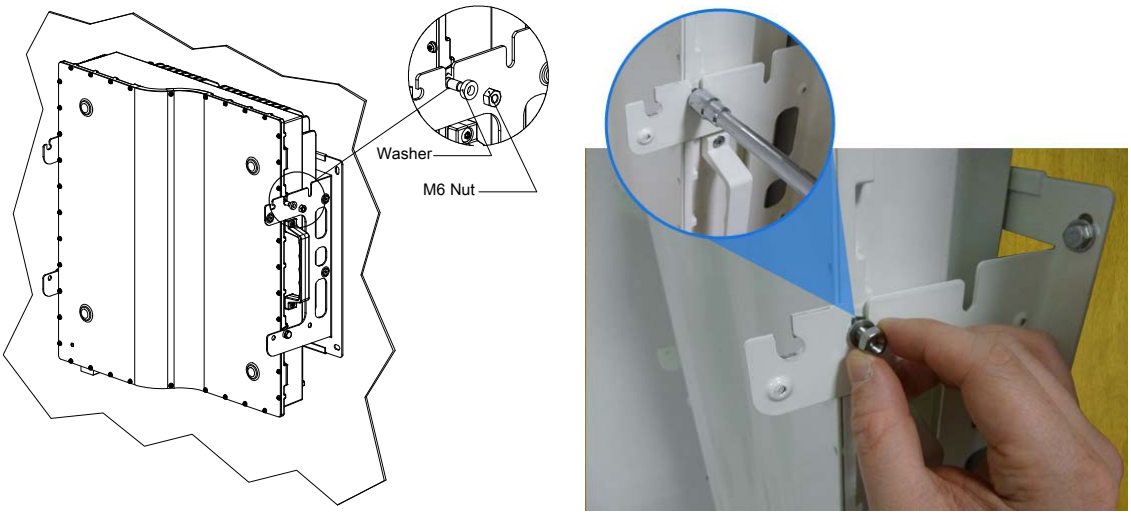

figure 4-12 Attach M6 nut to threaded pins

5. Install the second RU on the wall-mounting bracket by lifting the RU into place and lowering it down onto the bracket. The 2nd RU is reversed in direction from the 1st RU. The M6 pins must align with the slots in the bracket to support the RU.

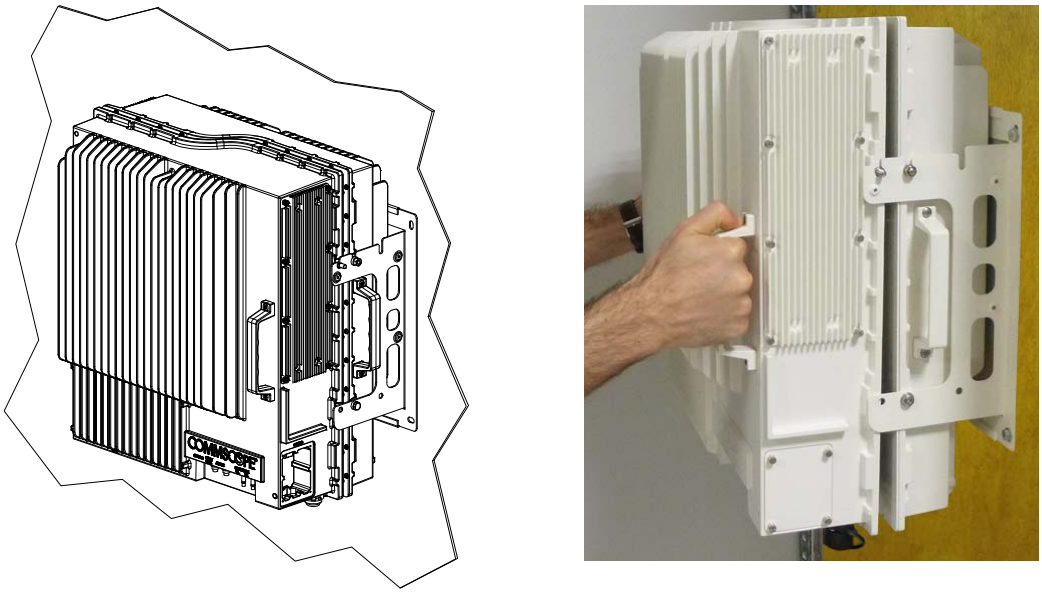

figure 4-13 2nd RU on wall mounting bracket

6. Fasten the lower section of the second RU to the bracket using a washer and an M6x12 screw (on both sides). Slide a washer over each screw and then insert the screw and tighten it securely.

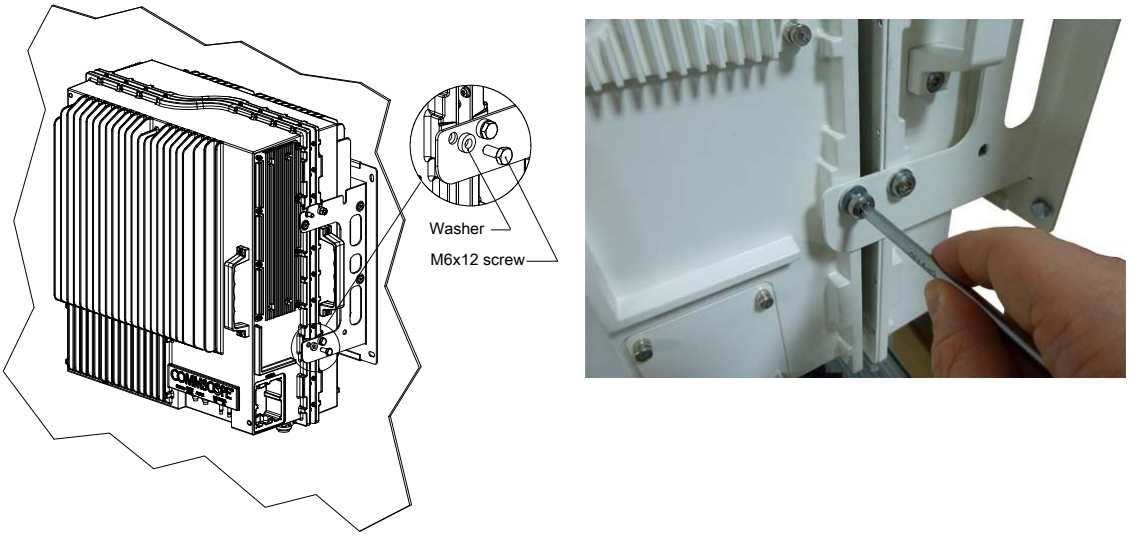

figure 4-14 Install M6x12 screws and washers 2nd RU

7. Fasten the RU to the bracket using a washer and M6 nut. Slide the washer over the threaded pins that you installed previously (chapter *4.1.3*) and then screw the nut onto the pins (on both sides) and tighten securely.

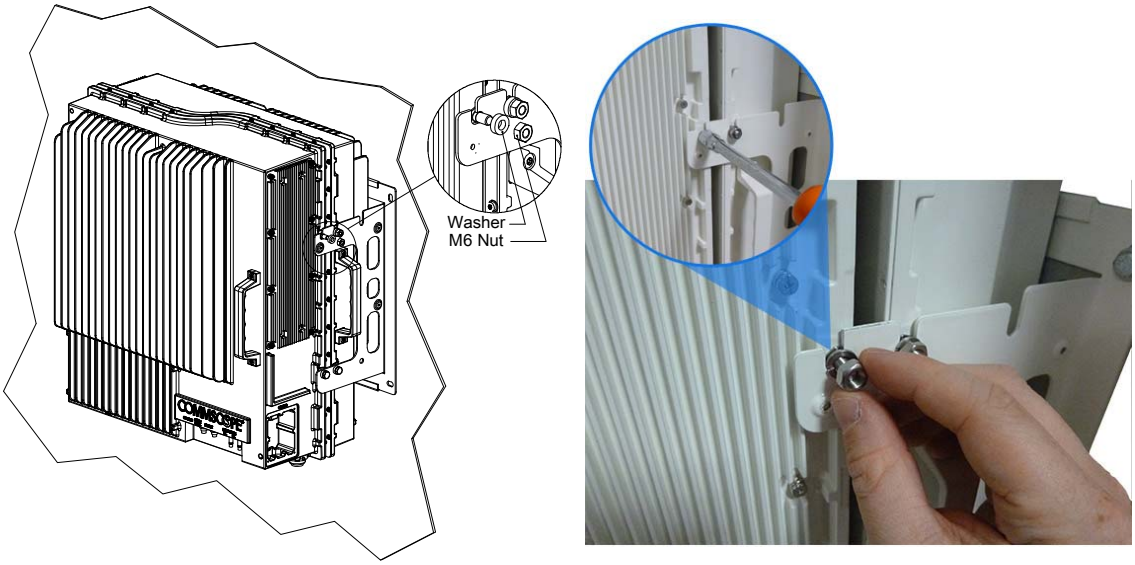

figure 4-15 Attach M6 nut to threaded pins for 2nd RU

8. Confirm that all screws and nuts have been fastened and the unit is securely mounted to the wall.

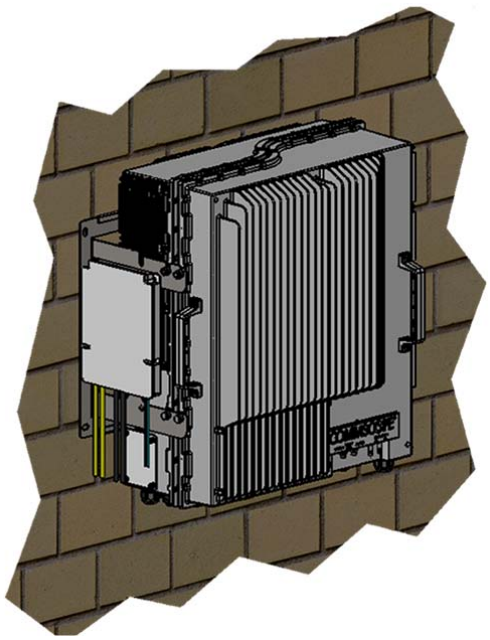

figure 4-16 Completed MIMO RU mount

4.1.7. Pole mounting procedure – SISO and MIMO

The pole mounting procedures are identical to the wall mounting procedures described in chapters 4.1.5 Wall mounting procedure – Single Unit (SISO) and 4.1.6 Wall mounting procedure – Dual Units (MIMO), except for the mounting of the mounting bracket described in chapter 4.1.3.2 Mount to a pole.

4.2. Low Power RU Electrical Installation

4.2.1. Health and Safety for electrical installation

Read and observe chapter 1.2 Health and Safety.

1. **Danger: Electrical hazard. Danger of death or fatal injury from electrical current. Obey all general and regional installation and safety regulations relating to work on high voltage installations, as well as regulations covering correct use of tools and personal protective equipment.**

2. **Danger: Electrical hazard. Danger of death or fatal injury from electrical current inside the unit in operation. Before opening the unit, disconnect mains power.**

4.2.2. Property Damage Warnings for electrical installation

1. **Attention:** It is compulsory to ground (earth) the unit before connecting the power supply. Grounding bolts are provided on the cabinet to connect the ground-bonding cable.

2. **Attention:** If the mains connector of the unit is not easily accessible, a disconnect device in the mains power circuit must be provided within easy reach.

3. **Attention:** A connection of the mains supply to a power socket requires the power socket to be nearby the unit.

4. **Attention:** Before connecting or disconnecting the mains connector at the unit, ensure that mains power supply is disconnected.

5. **Attention:** Make sure that an appropriate circuit breaker acting as a disconnect device (as required by IEC/EN60950-1) and an overcurrent limiting device are connected between mains power and the unit.

6. **Attention:** Incorrectly wired connections can destroy electrical and electronic components.

7. **Notice:** To avoid corrosion at the connectors caused by electrochemical processes, the material of the cable connectors must not cause a higher potential difference than 0.6 V (see electrochemical contact series).

8. **Notice:** Use an appropriate torque wrench for the coupling torques:
   - for N-type connectors (2 N-m / 20 in lb) with 13/16 in opening, e. g. item no. 244379 available from the *CommScope e-catalog*
   - for 4.3-10 type connectors (5 N-m, 44 in lb) with 22mm (7/8) in opening

   Do NOT use your hands or any other tool (e.g. a pair of pliers). This might cause damage to the connector and lead to a malfunction of the unit.

9. **Notice:** For unstabilized electric networks, which frequently generate spikes, the use of a voltage limiting device is advised.

10. **Notice:** Observe the labels on the front panels before connecting or disconnecting any cables.

11. **Notice:** Unused connectors must be closed with their protective covers to ensure water tightness.

4.2.3. Connections

ION-U Low Power RU Connectors/Indicators		
Port/Conn	**Purpose**	**Type**
MAINS (Vac/Vdc)	This connector provides the power to RU models that use standard AC (85 to 265 Vac) or RU models that use standard DC (-60 to -38 Vdc) power.	Amphenol C016 Series, 4-Pin
Grounding Bolts	Ground (earth) bolts for connecting the mandatory ground cable to the RU.	M6 bolts, hex nut, & washers
ANT RF	This connector is used for transmitting and receiving signals to and from an antenna or antenna splitter.	4.3-10 female (1-st generation N-type female)
PROBE	This port is used as measurement probe to antenna port.	QMA Female
LOCAL RS-232	This connector is used for external modem communication with an optional Extension unit.	DB-9 Female
STATUS	This LED provides a visual warning of an alarm condition. The color of the LED indicates the severity of the alarm.	LED
PWR/CTRL	This connector supports an optional fan unit. The RU provides power and fan speed control to the fan unit and receives alarms from it.	Binder 712 series 7-pin
ALARM	This connector provides alarm contacts that are used to monitor and report alarms generated by other equipment.	Binder 712 series 5-pin
EXPANSION UL	This connector is used to connect to the UL port of an expansion unit to provide additional bands of coverage.	QMA Female
EXPANSION DL	This connector is used to connect to the DL port of an expansion unit to provide additional bands of coverage.	QMA Female
OPTICS UL	This connector is used to connect an optical fiber cable to send uplink signal back to the OTRx module of the ION-U master unit.	LC-APC
OPTICS DL	This connector is used to connect an optical fiber cable to receive downlink signal from the OTRx module of the ION-U master unit.	LC-APC
MAINS (Vdc/100)	This connector provides the power to RU models used in locations where the power drawn on each cable must be limited to a maximum of 100 VA.	Amphenol C016 Series, 7-Pin

table 4-2 ION-U Low Power RU connectors - description

4.2.4. Grounding (Earthing)

The RU must be grounded (earthed).

1. Connect an earth-bonding cable to the grounding bolt connection provided on the outside of the unit (near the Mains connector) as shown in figure 4-17. Do not use the grounding connection to connect external devices.

figure 4-17 Grounding bolts

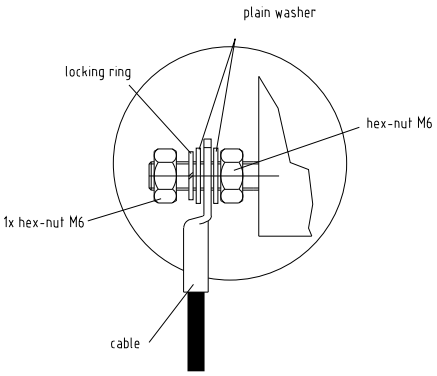

figure 4-18 Grounding bolt, schematic view

2. After loosening the hex nut(s), connect the earth-bonding cable between the two washers as illustrated in the figures above.

3. Then, fasten all parts again by tightening the hex nut(s).

4. Connect the other end of the ground wire to a suitable permanent ground following local electrical code practices.

4.2.5. Mains power connection

Before connecting electrical power to the units, the system must be grounded (earthed) as described in the previous chapter.

The Mains power must be connected to the Mains connector of the unit for operation of the RU. A power cable is delivered with each RU. The type of power cable delivered is dependent on the type of power supply in the unit.

The AC power cable is a 3.2 m (10.5 ft) 16 AWG cable with a 4-pin Amphenol C016 series plug on one end to connect to the RU Mains connector. The other end of the cable is un-terminated with 3 end splices to connect to the AC power source. A 10 m (33.7 ft) AC power cable is also available as an option. The AC power cable is shown in figure 4-19.

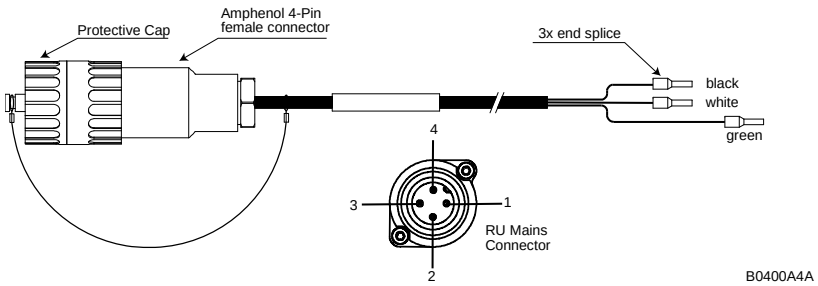

figure 4-19 AC power cable

4-Pin Amphenol C016 Series		
Pin	**Name**	**Color**
1	Phase	Black
2	Neutral	White
3	n.c.	n.c
4	Ground	Green

table 4-3 AC power cable

The standard DC power cable is a 3.2 m (10.5 ft) 13 AWG cable with a 4-pin Amphenol C016 series plug on one end to connect to the RU Mains connector. The other end of the cable is un-terminated with 2 end splices to connect to the -48 Vdc power source. The standard DC power cable is shown in figure 4-20.

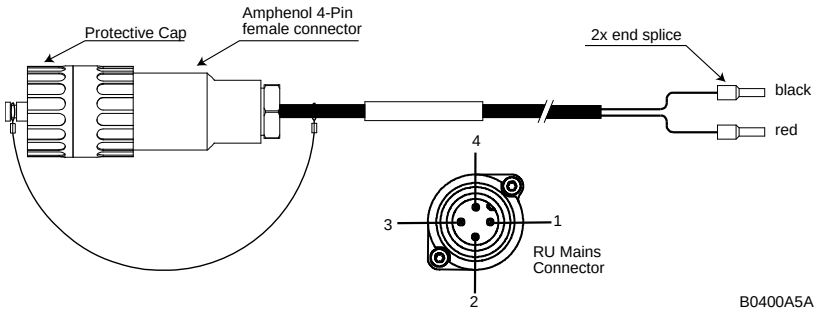

figure 4-20 DC power cable

4-Pin Amphenol C016 Series		
Pin	**Name**	**Color**
1	n.c	n.c
2	–48V	Black
3	0V	Red
4	n.c.	n.c

table 4-4 DC power cable

The Vdc/100 power cable is available for locations where the power drawn on each cable must be limited to a maximum of 100 VA. This cable is a 3.2 m (10.5 ft) 16 AWG cable with a 7-pin Amphenol C016 series plug on one end to connect to the RU Mains connector. The other end of the cable is un-terminated with 4 end splices to connect to the -48 Vdc power source.

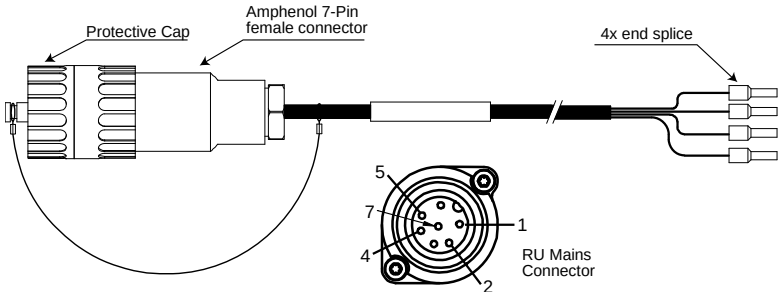

figure 4-21 Vdc/100 power cable

7-Pin Amphenol C016 Series		
Pin	**Name**	**Color**
1	0V	White
2	–48V	Black
3	n.c.	-
4	0V	Red
5	–48V	Green
6	n.c	-
7	n.c	-

table 4-5 Vdc/100 power cable

Notice: For the AC power supply connection, a minimum cross section of 1.5 mm^2 is required and for the DC power supply connection, a minimum cross section of 2.5 mm^2 is required. Each wire must observe the applicable national regulations regarding loop impedance, voltage drop, and methods of installation. Make sure to connect the correct voltage to the unit.

Notice: Do not connect or disconnect the power cable at the mains connector while power is on. Turn off mains* power before connecting the power cable at the unit, then, engage mains power again.

* Mains power must be interruptible with an external delay-actions mains breaker. For the mains breaker, observe the following recommendation:

120 Volt / 20 Amp max. or 240 Volt / 16 Amp, single-phase, 50 / 60 Hz AC service is needed, i.e. the external AC breaker should be 20 Amps max. for 120-Volt service or 13 to 16 Amps for 240-Volt service.

For the DC power supply, observe the local regulations of the DC service provider.

Use the following method to install and connect the Mains power to the RU:

1. Locate the Mains power cable that was delivered with the RU.
2. Locate or install a suitable power junction box or receptacle near the unit and route the power cable from the power source to the RU. Do not connect the cable to the unit's Mains connector at this time. The power source must be interruptible.
3. The Mains cable must be properly secured observing local regulations and electrical codes. Be sure to allow enough slack in the cable at the RU to plug or unplug the cable into the Mains connector.

4. Wire the power cable to the junction box or receptacle. Refer to the color code and pin numbers shown in figure 4-19 (AC cable), figure 4-20 (DC cable), or figure 4-21 (Vdc/100 cable) depending on the type of power supply used by the unit.
5. With the cable's Mains plug disconnected from the RU, turn the circuit breaker on, unscrew the plug's protective cover, and carefully test the plug with a voltmeter to ensure that the voltage and polarity are correct.
6. Once the testing has been completed, turn off the circuit breaker.
7. Unscrew the protective cover from the Mains connector of the unit.
8. Insert the plug into the Mains connector (figure 4-22) and tighten the clamping ring until it is hand tight. Do not over-tighten the clamping ring.

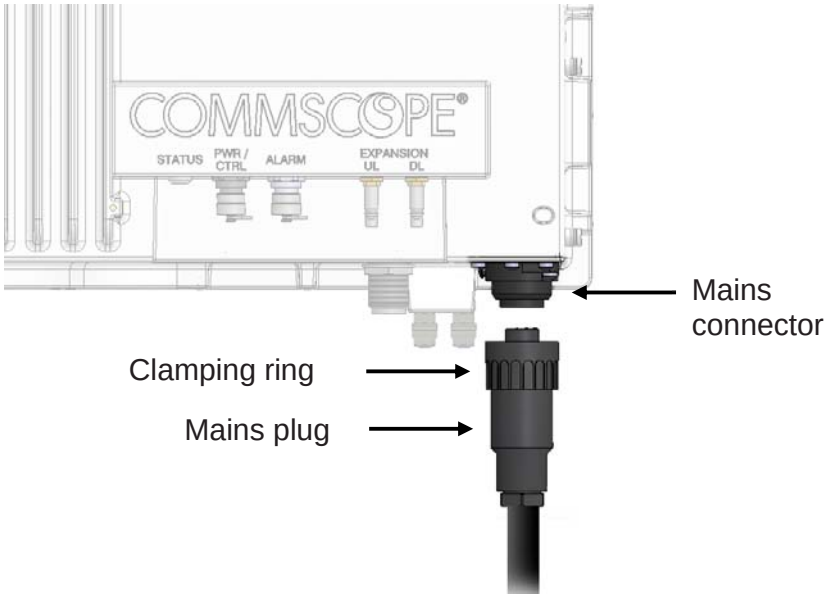

figure 4-22 Connect mains plug

4.2.6. Antenna connection

The Remote Unit has one 4.3-10 (1-st generation: N-type) antenna connector (figure 4-23). For mounting the cable connector, it is recommended to refer to the corresponding documentation of the connector manufacturer. The bending radius of the antenna cables must remain within the given specifications.

The selection of cable and antenna is an important consideration. Choose the type of cable best suited for the antenna. Consider that a cable with higher loss is less expensive but impairs performance.

Notice: Use an appropriate torque wrench for the coupling torques:

- for N-type connectors (2 N-m / 20 in lb) with 13/16 in opening, e. g. item no. 244379 available from the CommScope e-catalog
- for 4.3-10 type connectors (5 N-m, 44 in lb) with 22mm (7/8) in opening

Do NOT use your hands or any other tool (e.g. a pair of pliers). This might cause damage to the connector and lead to a malfunction of the unit.

Attention: To minimize passive inter-modulation (PIM) distortion, attention has to be paid to the physical condition of the connector junctions:

- Do not use connectors that show signs of corrosion on the metal surface.
- Prevent the ingress of water or dirt into the connector.
- Use protective caps for the connectors when not mounted.
- Before mounting clean the connectors with dry compressed air.
- Before mounting clean the mating surfaces of the connector with a lint-free alcohol-drenched cloth on a wooden or non-metallic item.
- Attach and torque the connectors properly.
- Avoid metallic abrasion when mounting the connectors by only screwing the connecting nut, but not turning the whole connector.
- Use a torque wrench to fasten the connector, see above.
- Clean the protective caps before mounting for antenna cable replacement.

4.2.6.1. Cleaning procedure for RF cable connectors

1. What is needed for the cleaning?
   a. Isopropyl alcohol or similar
   b. Compressed air
   c. Lint-free wipe
   d. Cotton buds

2. Remove protective cap from the RF connector.

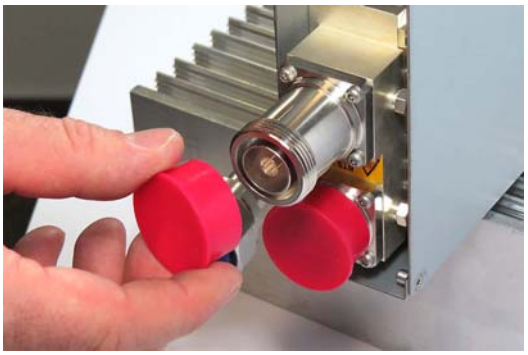

Caution: Risk of injury by flying particles when compressed air is used. Wear protective clothing, especially protective glasses.

3. Remove metal chips and small particles from the mating and inner surfaces of the connector using compressed air.

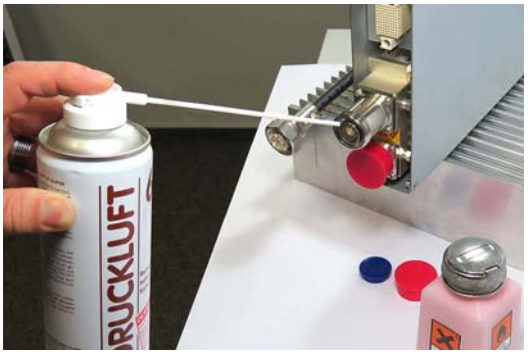

Warning: Flammable material. Risk of fire. Keep away from sources of ignition.

Caution: Eye irritant product. Risk of eye irritation. Avoid contact with eyes and skin. Wear protective clothing, especially protective glasses.

4. Clean the connector winding with lint-free wipe drenched with isopropyl alcohol.

5. Clean the lip of the inner ring with a cotton bud drenched with isopropyl alcohol.

6. Clean the inside surface of the inner ring with a cotton bud drenched with isopropyl alcohol.

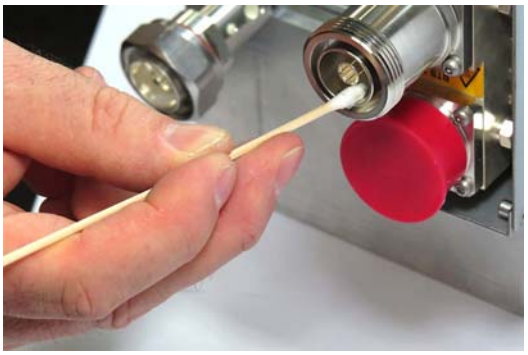

7. Clean the inside of the center conductor spring tines with a cotton bud drenched with isopropyl alcohol.

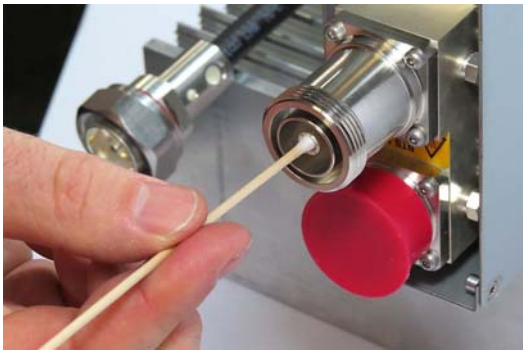

8. Clean in the similar way the connector of the connected cable. Remove protective caps from the unit connector first.

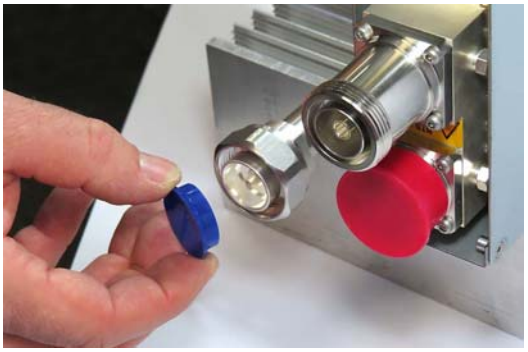

9. Remove metal chips and small particles from the mating and inner surfaces of the connector using compressed air.

10. Continue with the winding area using lint-free wipe drenched with isopropyl alcohol.

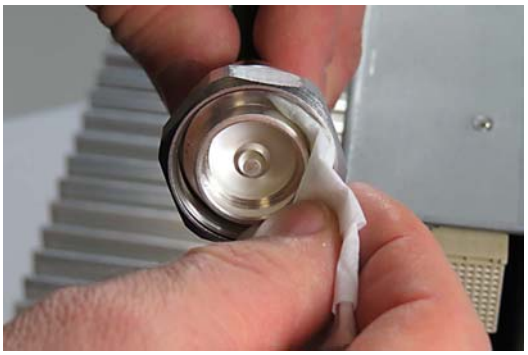

11. Continue with the inside mating surface of the inner ring.

12. Clean the outside surface of the center pin.

4.2.6.2. Antenna cable connector assembly

1. What is needed for the connector assembly?
    a. Torque wrench.
    b. (Adjustable) counter wrench

2. Join the connectors and turn the coupling nut until the thread grips.

3. Push in the connector until it clicks.

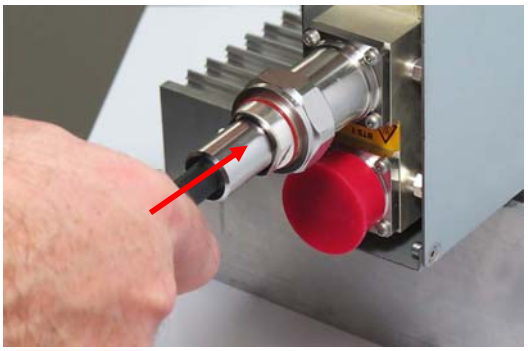

4. Fasten the coupling nut hand-tight. Do not turn the connector but the coupling nut only.

5. Retain the cable connector with the counter wrench and fasten the coupling nut with the torque wrench until the torque is applied (torque wrench clicks).

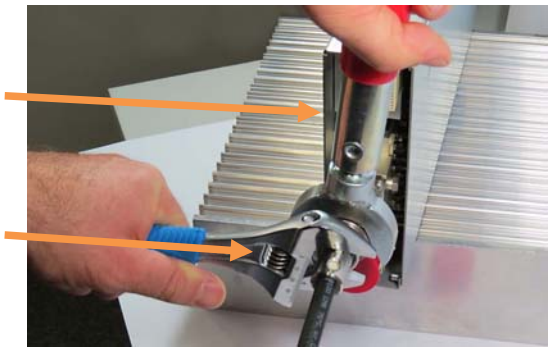

For angled antenna connectors use your hand to retain the cable connector and fasten the coupling nut with the torque wrench. Make sure only the coupling nut is turned, not the cable connector.

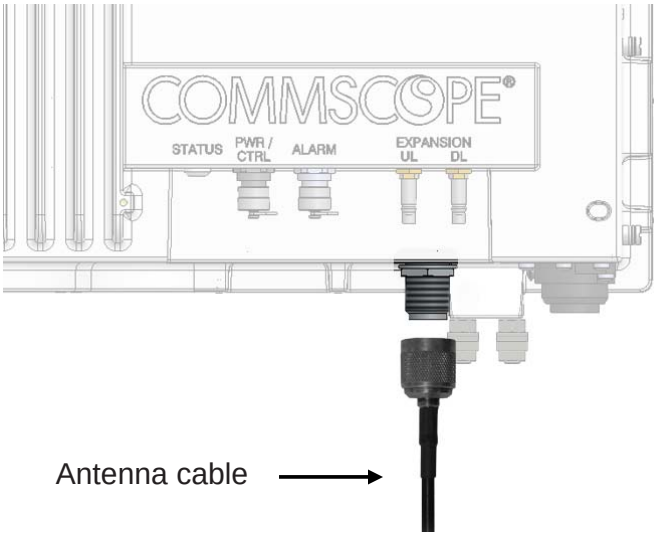

figure 4-23 Antenna connection

4.2.7. Coupling probe

The coupling probe is a QMA measurement probe that allows the measurement of the antenna output without disconnecting the antenna. The coupling is as follows:

Port	Coupling dB typ.
700 MHz	45
800/850 MHz	45
1900 MHz	41
1700 MHz	41

4.2.8. Expansion ports connections

The Expansion ports are QMA-F connectors that are used to connect to an Extension Unit to provide additional bands of coverage. The cables (1.5 m) required are included in the EU delivery

1. Connect an RF cable with QMA male connectors between the UL Expansion port connector of the RU to the UL port of the Extension Unit. Press the QMA connector of the cable onto the UL port of the RU until it clicks into place to connect the cable.
2. Connect an RF cable with QMA male connectors between the DL Expansion port connector of the RU to the DL port of the Extension Unit. Press the QMA connector of the cable onto the DL port of the RU until it clicks into place to connect the cable.

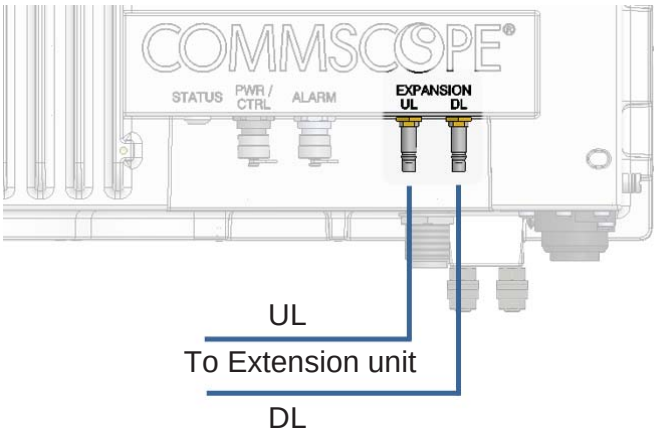

figure 4-24 Expansion ports

4.2.9. Alarm port

The Alarm port (RU only) provides alarm contacts that are used to monitor and report alarms generated by other equipment. The connector is a 5-pin Binder 712 series connector.

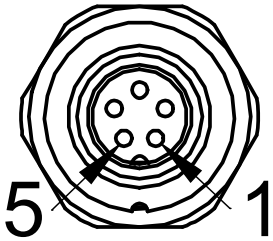

figure 4-25 Alarm connector

5-Pin Binder 712 Series	
Pin	**Assignment**
1	EXT1_Alarm
2	EXT1_GND
3	n.c.
4	EXT2_Alarm
5	EXT_GND

table 4-6 Alarm connector

4.2.10. Pwr/Ctrl port

The Pwr/Ctrl port is used to handle an optional fan unit. The connector will provide power to the fan unit and will allow the RU to control the fan speed. The connector is a 7-pin Binder 712 series connector.

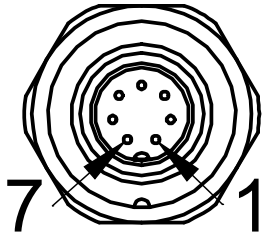

figure 4-26 Pwr/Ctrl connector

7-Pin Binder 712 Series	
Pin	**Assignment**
1	+V_FAN
2	Fan1 Alarm In
3	Fan1 (PWM) Out
4	GND_FAN
5	Fan2 Alarm In
6	Fan2 (PWM) Out
7	n.c

table 4-7 Pwr/Ctrl connector

4.2.11. Control connector RS-232 - Local Interface

This DB-9 female connector is used for external modem communication between RU and EU.

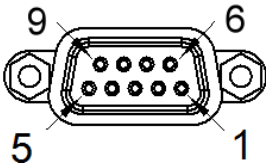

figure 4-27 RS-232 connector

DB-9 Female	
PIN	**Assignment**
1	Not connected (n.c.)
2	RS232 Rx
3	RS232 Tx
4	n.c.
5	GND (RS232)
6	n.c.
7	n.c.
8	n.c.

table 4-8 RS-232 connector, pin assignment

Connect the RS-232 cable (1.5 m, contained in delivery of EU) from the LOCAL port of the RU to the CONTROL port of the EU.

4.3. Low Power RU Optical Installation

4.3.1. Optical-fiber-cable connection - rules

Main optical system parameters:

Fiber:

- Single mode fiber, type is 9.5/125 µm
- Fiber-cable connectors LC/APC

ION-U system:

Note: The pigtails for the connection between Master Unit and Remote Unit must have a sufficient length. Protection for the optical fibers must be provided where the fibers feed into the units.

Note: The system attenuation of the optical fibers, including the connectors, must not exceed 5 dB.

System attenuation and attenuation of optical components must be determined. This can be achieved by measuring attenuation with an appropriate measuring instrument. For pigtails, a total value of < 0.4 dB (measured to a reference plug) can be assumed due to the dead zone of the reflectometer. These measurements must be made with a sufficient length of optical fiber, at the input and output of the device which has to be measured.

Fiber-System Installation:

Fiber-cable connectors have to be of the same type (LC/APC) as the connectors used for the unit. The fiber-optic cables are connected to the optical transceiver.

Notice: Angled connectors are not compatible with straight optical connectors; non-compatibility of connectors will result in permanent damage to both connectors.

Before connecting the fiber cables, follow the procedure below to ensure optimized performance. It is important for these procedures to be carried out with care:

- Remove fiber-optic protective caps just before making the fiber connections. Do not leave any LC/APC connectors open as they may attract dirt. Unused optical connectors must always be covered by their caps.

- Do not bend the fiber-optic cable in a tight radius (< 5 cm) as this may cause damage to the cable and interrupt transmission.

- Using high-grade alcohol and lint-free cotton cleaning swabs, clean the end of the fiber-optic cable that will be inserted in the optical connectors on the donor interface box. Use a fiber end-face inspection tool to scan both, the class fiber and its surrounding area.

- Check for dirt on the cladding, chips/pits, dirt on the ferrule, and scratches.

- Connect the fiber-optic cables by inserting the cable end into the laser receptacle.

- Do not use any index-matching gels or fluids of any kind in these connectors. Gels are intended for laboratory use and attract dirt in the field.

Notice: Care should be taken when connecting and disconnecting fiber-optic cables - use the connector housing to plug or unplug a fiber. Scratches and dust significantly affect system performance and may permanently damage the connector. Always use protective caps on fiber-optic connectors not in use.

Cleaning Procedure for Fiber-Optical Components:

Any contamination in the fiber connection results in additional optical transmission loss which could cause whole system failure. It is thus recommended that every fiber connector be inspected and cleaned prior to mating.
The goal is to eliminate any dust or contamination and to provide a clean environment for the fiber-optic connection.

When you clean fiber components, always complete the following steps carefully:

Caution: Laser radiation. Risk of eye injury in operation. Do not stare into the beam; do not view it directly or with optical instruments.

1. Turn off the ION-U system (laser sources) before you inspect fiber connectors.
2. Check the connectors or adapters with a fiberscope before cleaning.
3. If the connector is dirty, clean it with a lint-free wipe (dry cleaning).
4. Inspect the connector.
5. If the connector is still dirty, repeat the dry cleaning technique.
6. Inspect the connector.
7. If the connector is still dirty, clean it with 99% isopropyl alcohol (wet cleaning) followed immediately with a dry clean in order to ensure no residue is left on the surface.
8. Repeat steps 5 through 7 until surface is clean.

Note: For a more detailed description, please refer to:
http://www.cisco.com/en/US/tech/tk482/tk876/technologies_white_paper09186a0080254eba.shtml

4.3.2. Optical cable installation

- Locate the Optics connector cover on the lower right side of the RU. Loosen the four cover screws, remove the cover, and set it aside. Removing this cover allows access to the UP and DL optical connectors.

figure 4-28 Remove optics cover

- Remove the sealing nut from the optical cable gland at the bottom of the RU.

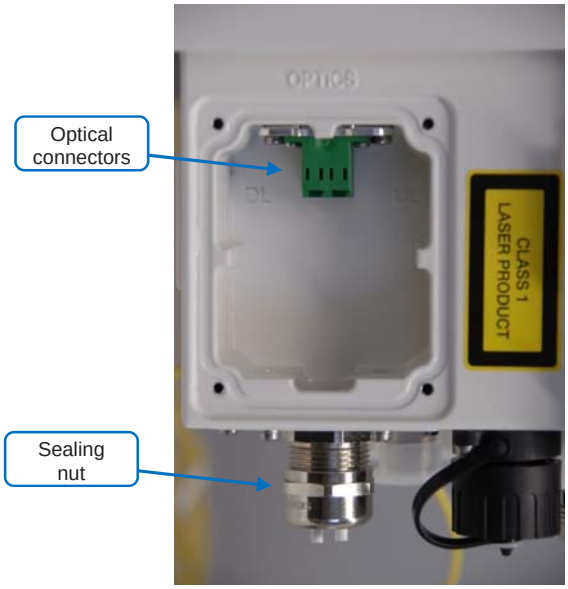

figure 4-29 Remove sealing nut

- Remove the split-seal and clamp jacket.

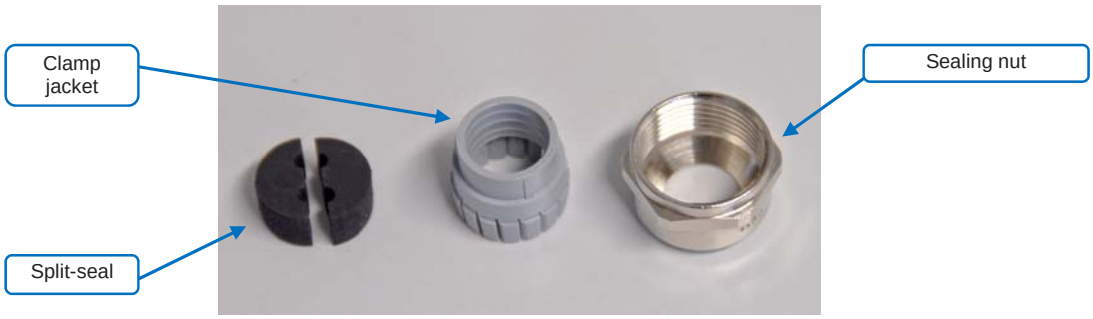

figure 4-30 Split-seal and clamp jacket

- Insert the optical cables through the sealing nut and the clamp jacket.
- Then insert the optical cables through the connector socket into the cabinet.

- Connect the optical cables to the proper UL and DL LC/APC connectors.

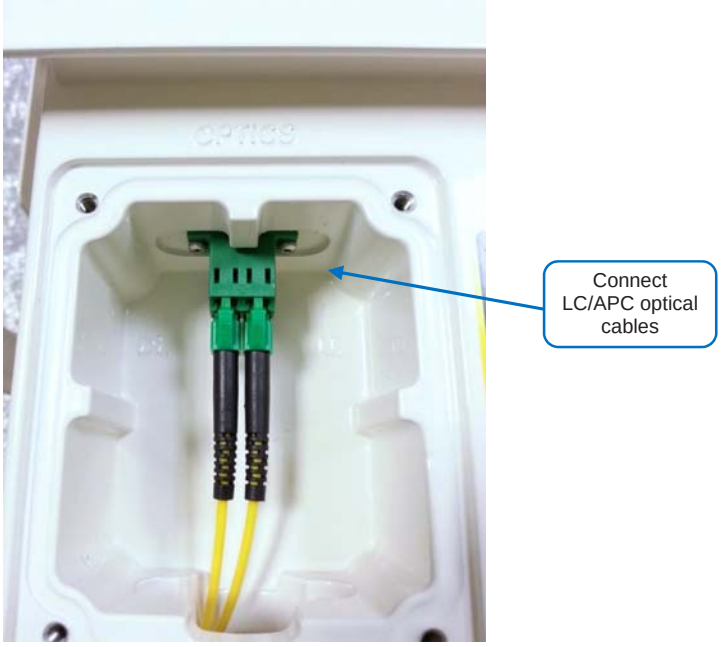

figure 4-31 Optical cables connected

- Separate the two halves of the split-seal. Place both cables into the grooves of each half of the split-seal. Insert the spit seal into the clamp jacket.

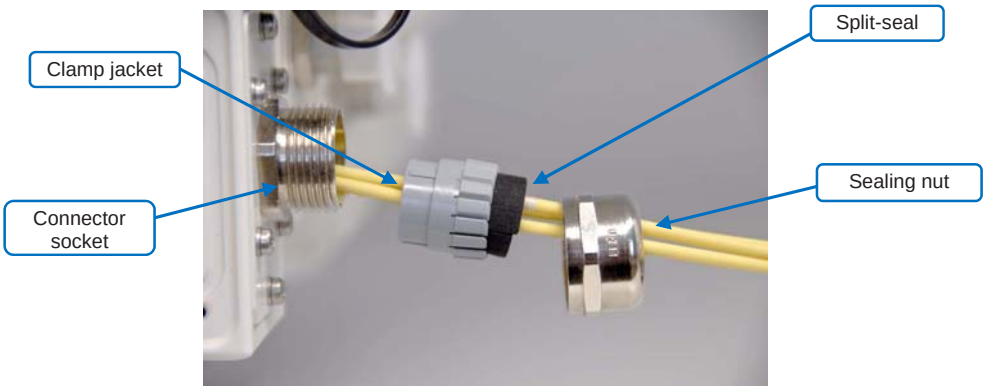

figure 4-32 Place cables into split-seal

- Insert the clamp jacket with split seal to the connector socket and fasten them with the sealing nut.

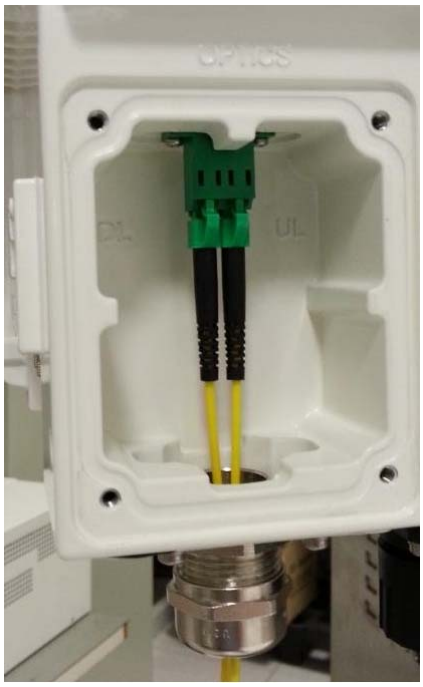

figure 4-33 Optical cable installed

- Re-assemble the optics metal cover and tighten the four screws that were loosened in step 1.

4.4. Accessory Equipment Installation – Splice Box

For the installation and connection of optical and electrical cables a splice box is available, both for SISO and MIMO installations. The splice box is capable of holding up to two composite cables (optical and electrical), two electrical cables and four optic fiber cables.

Attention: To safeguard waterproofness the outer diameter of the optical fibers has to be 3 mm, the outer diameter of the cables have to be in between 7 to 13 mm.

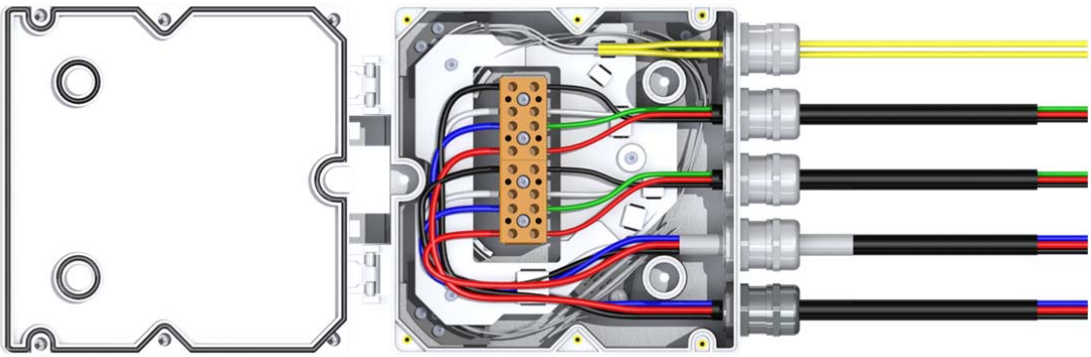

4.4.1. SISO installation

1. Hang the splice box to the mounting bracket to the right-hand side of the RU.
2. Open the splice box by unscrewing the six neck screws.

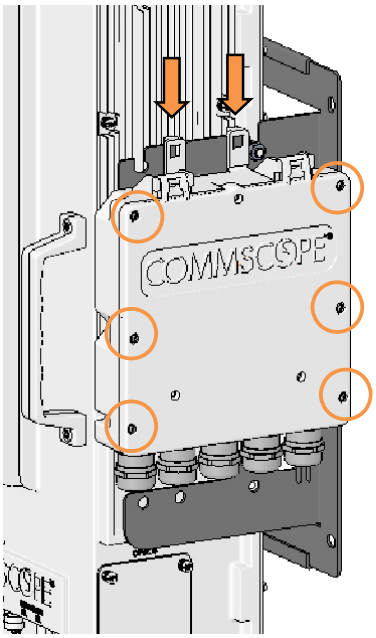

3. Use the upper hole and the hole to the right-hand side to fasten the splice box to the mounting bracket with two M4 x 25 pan head screws.

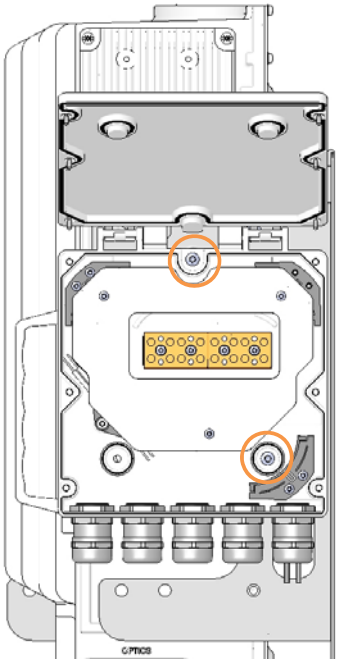

4.4.2. MIMO installation

1. First break the left-hand side hook of the splice box bracket. This is necessary for proper mounting.
2. Hang the splice box to the mounting bracket to the left-hand side of the RUs.
3. Open the splice box by unscrewing the six neck screws.

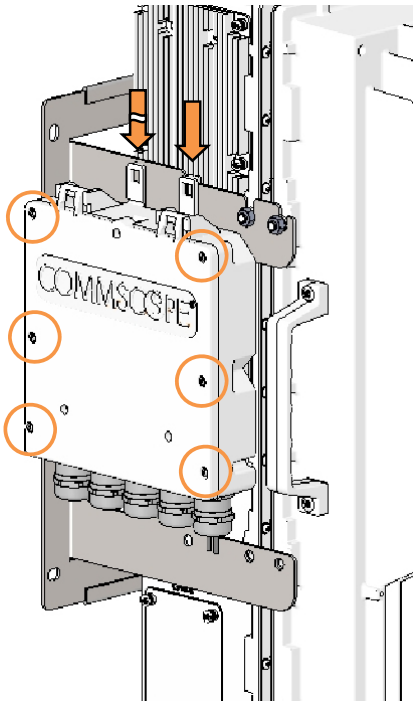

4. Use the upper hole and the hole to the left-hand side to fasten the splice box to the mounting bracket with two M4 x 25 pan head screws.

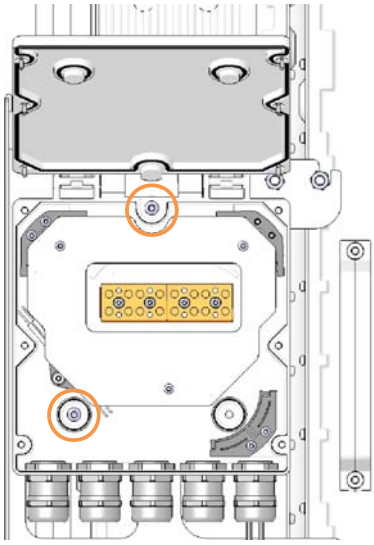

4.5. Low Power RU Alarms

4.5.1. Bite and alarms

The Built-In Test concept comprises the monitoring of the power supplies, the power amplifiers, and the optical interface.

All alarms that occur can be checked via software at the Master Unit.

4.5.2. Handling of alarms

As soon as the software acknowledges a valid alarm, a message is transmitted to the master unit.

If the reason for the alarm has been cleared or if the alarm should continue, a new alarm message will not be repeated. If there is an interruption of at least five seconds after acknowledgement, a new alarm message will be generated.

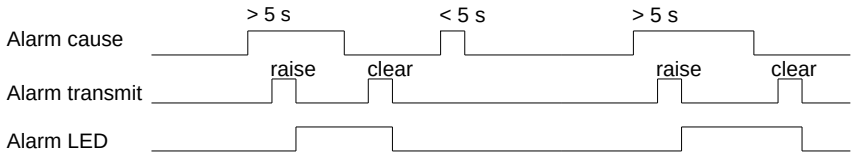

figure 4-34 Alarm triggering

4.5.3. Status LED alarms

For local supervision, a status LED on the connector panel of the Remote Unit adjacent to the Expansion ports provides a visual warning of an alarm condition. The color of the LED indicates the severity of the alarm. Detailed alarm information is available through the ION-U software interface. This table lists the alarm conditions and possible on-site measures that could be performed to resolve the issues responsible for triggering the alarms.

Alarm Name	Description	Remedy	Default Severity	LED
DL optical power fail	Received optical power below minimum threshold	check fiber connections and transmitted optical power	major	Red
Temperature Alarm	temperature too high	check ventilation and environment	warning	Green
VSWR Alarm	bad RF cabling / mismatched antenna	check cable / antenna	critical	Orange
RF Low Output CELL700	RF signal too low	check BTS output level/attenuator configuration/RF cabling	minor	Green
RF Low Output CELL 850	RF signal too low	check BTS output level/attenuator configuration/RF cabling	minor	Green
RF Low Output LMR 800	RF signal too low	check BTS output level/attenuator configuration/RF cabling	minor	Green
RF Low Output PCS 1900E	RF signal too low	check BTS output level/attenuator configuration/RF cabling	minor	Green
RF Low Output AWS	RF signal too low	check BTS output level/attenuator configuration/RF cabling	minor	Green
DL CELL 700 band alarm	hw failure in RF section	change unit	critical	Red
DL LMR800+CELL850 alarm	hw failure in RF section	change unit	critical	Red
DL PCS 1900E band alarm	hw failure in RF section	change unit	critical	Red
DL AWS band alarm	hw failure in RF section	change unit	critical	Red
UL CELL 700 band alarm	hw failure in RF section	change unit	critical	Red
UL LMR800+CELL850 band alarm	hw failure in RF section	change unit	critical	Red
UL PCS 1900E band alarm	hw failure in RF section	change unit	critical	Red
UL AWS band alarm	hw failure on RF section	change unit	critical	Red
UL Overdrive/ALC Limiting CELL 700	too high RF signal feeding device	check unit/attenuator configuration	minor	Green
UL Overdrive/ALC Limiting LMR800+CELL850	too high RF signal feeding device	check unit/attenuator configuration	minor	Green
UL Overdrive/ALC Limiting PCS 1900E	RF signal feeding device too high	check unit/attenuator configuration	minor	Green
UL Overdrive/ALC Limiting AWS	RF signal feeding device too high	check unit/attenuator configuration	minor	Green
Internal bus alarm	internal I2CBUS communication malfunction	change unit	critical	Red
UL Laser Alarm	Uplink laser fail (cooling or current failure)	change unit	major	Red

Alarm Name	Description	Remedy	Default Severity	LED
External 1 Alarm	external input alarm	check external device/ check alarm connection	major	Orange
External 2 Alarm	external input alarm	check external device/ check alarm connection	major	Orange
RF High Output CELL700	RF signal too high	check BTS output level/attenuator configuration/RF cabling	major	Green
RF High Output CELL 850	RF signal too high	check BTS output level/attenuator configuration/RF cabling	major	Green
RF High Output LMR 800	RF signal too high	check BTS output level/attenuator configuration/RF cabling	major	Green
RF High Output PCS 1900E	RF signal too high	check BTS output level/attenuator configuration/RF cabling	major	Green
RF High Output AWS	RF signal too high	check BTS output level/attenuator configuration/RF cabling	major	Green
Power Supply 1 Alarm	internal power supply alarm	change/verify unit	major	Red
Power Supply 2 Alarm	internal power supply alarm	change/verify unit	major	Red
Power Supply 1 exceeded load threshold	power supply load too high	change/verify unit	minor	Green
Power Supply 2 exceeded load threshold	power supply load too high	change/verify unit	minor	Green
Power Supply 1 partial availability	internal power supply alarm / partial power available	change/verify unit	major	Green
Power Supply 2 partial availability	internal power supply alarm / partial power available	change/verify unit	major	Green
High Power Consumption	power supply load too high	change/verify unit	minor	Green
Low Power Consumption	power supply load too low	change/verify unit	minor	Green

table 4-9 Status LED alarms

4.6. External Alarm Inputs

With the external alarm inputs, it is possible to monitor the status of connected devices, e.g. a UPS, via software. All alarm inputs are normally high (5 V) without connection. The polarity (high/ low) can be set via the software at the Master Unit (for details please see the appropriate ION-U software manual).

The device to be monitored must be connected so that the alarm contacts will be closed in case of an alarm (I max = 8 mA). The alarm inputs are potential-free with common ground (earth).

Subminiature circular connectors series 712 with five contacts, which are contained in the alarm kit, can be ordered directly from the Binder Connector Group, the manufacturer, or indirectly from CommScope.

4.7. Troubleshooting

The status of the Remote Unit can be checked via the master unit (for details please refer to the ION-U software manual). Locally, the status can be checked at the LED, see chapter *4.5.3 Status LED alarms.*

5. Low Power RU Maintenance

5.1. General

Read and observe chapter 1.2 Health and Safety.

Note: The Remote Unit does not require preventative maintenance measures.

Maintenance of the ION-U Low Power units should be performed by replacing only components that are described in this chapter. In order to maintain the warranty, avoid unintentional damage to the seals on the modules.

The spare parts list includes only units that can be replaced in the field without tuning or soldering work.
Please contact your CommScope sales representative or DCCS Technical Support for a current ION-U LP RU parts list.

Note: When sending back the unit, use appropriate packaging. Use of the original packaging for shipping the unit is strongly recommended.

Note: Defective parts should only be replaced by original parts from the supplier. All service work performed inside the housing is performed at the users own risk.

Note: Label any unlabelled cables before disconnecting them to ensure correct reconnection.

Unless otherwise agreed to in writing by CommScope, CommScope's general limited product warranty (http://www.commscope.com/Resources/Warranties/) shall be the warranty governing the Remote Units, including the installation, maintenance, usage and operation of the Remote Units.

For most maintenance procedures, appropriate tools are required to ensure correct handling. All of these tools can be ordered from the supplier.

Note: All unit screws have a right-hand thread, and are tightened by turning the screws clockwise and loosened by turning them counter-clockwise with an appropriate tool.

Due to the design of the Remote Unit, the power supply is the only component that should be replaced in the field. Please contact the supplier for replacement of any other components.

5.2. RU Power Supply Replacement

The power supply for the RU is a field replaceable module. The type of power supply used by the unit (AC, DC, or Vdc/100) is dependent on the model number.

Attention: Before starting any maintenance on the RU, read and observe chapter 1.2 Health and Safety and the electrical installation information in chapter 4.2.1 Health and Safety for electrical installation.

1. **Danger: Electrical hazard. Danger of death or fatal injury from electrical current inside the unit in operation. Before opening the unit, disconnect mains power.**

2. **Caution: The unit reaches high temperature in operation. Risk of burns by hot surface. Do not touch the unit before it has sufficiently cooled down.**

1. Switch off the circuit breaker supplying power to the RU.

2. Once you have confirmed that the power has been shutdown, remove Mains power connector from the unit.

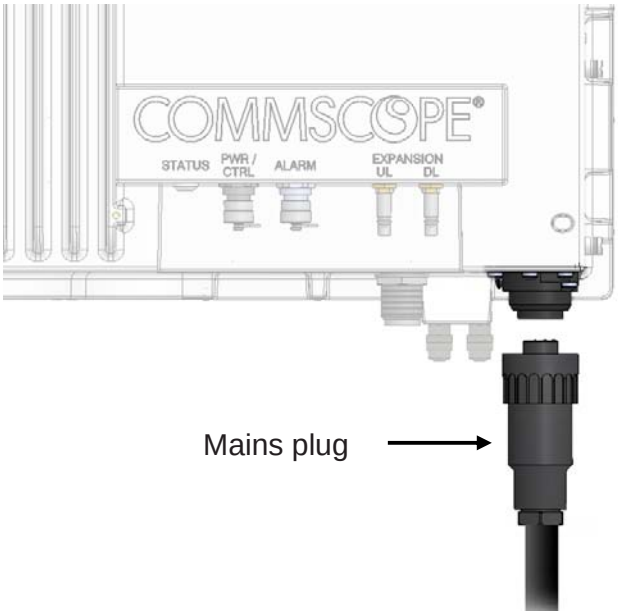

figure 5-1 Disconnect mains power

3. Locate the power supply on the right side of the Remote Unit.

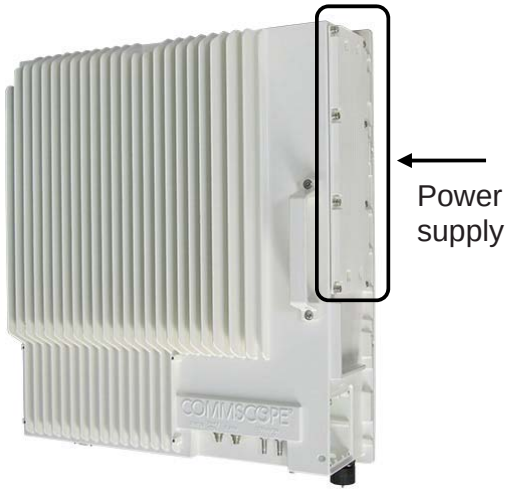

figure 5-2 RU power supply location

4. Use a #2 Phillips head or slotted screwdriver to loosen the 8 universal slot/Phillips captive power supply screws and carefully remove the supply. The weight of the power supply must be supported as you loosen the screws to prevent damage to the supply.

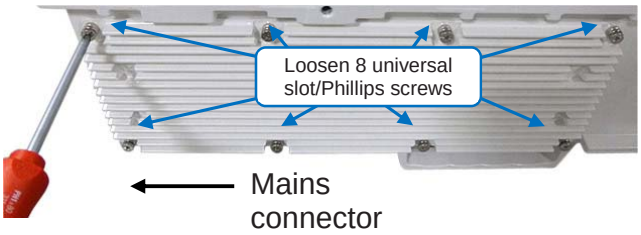

figure 5-3 8 RU power supply screws

5. Carefully remove the power supply from the unit. Do not attempt to support the weight of the supply with the attached input and output cables.

figure 5-4 RU power supply with cables

6. Locate the input cable connector for the power supply on the right side of the supply.
7. Loosen the 3 Phillips head terminal screws and remove the connector.

figure 5-5 RU power supply input cable

8. Locate the output connector for the power supply on the left side of the supply.
9. Loosen the 2 Phillips head screws and remove the output connector.

figure 5-6 RU power supply output cable

10. Remove the defective supply.

figure 5-7 RU with power supply removed

11. Replace the defective power supply with the new power supply. It is very important to confirm that the replacement supply is the same type as the original supply. **The AC, DC, and Vdc/100 supplies are not interchangeable.**
12. Reconnect the input and output connectors, and tighten the associated terminal screws.
13. Insert the power supply into the RU carefully to avoid damaging any cables. The supply must be supported until the 8 universal slot/Phillips captive power supply screws have been tightened.
14. Tighten the 8 universal slot/Phillips captive power supply screws.

figure 5-8 RU insert power supply

15. Reconnect the Mains power plug.
16. Switch on the breaker and check the RU for proper operation.

figure 5-9 Reconnect mains power

6. Appendix

6.1. Illustrations

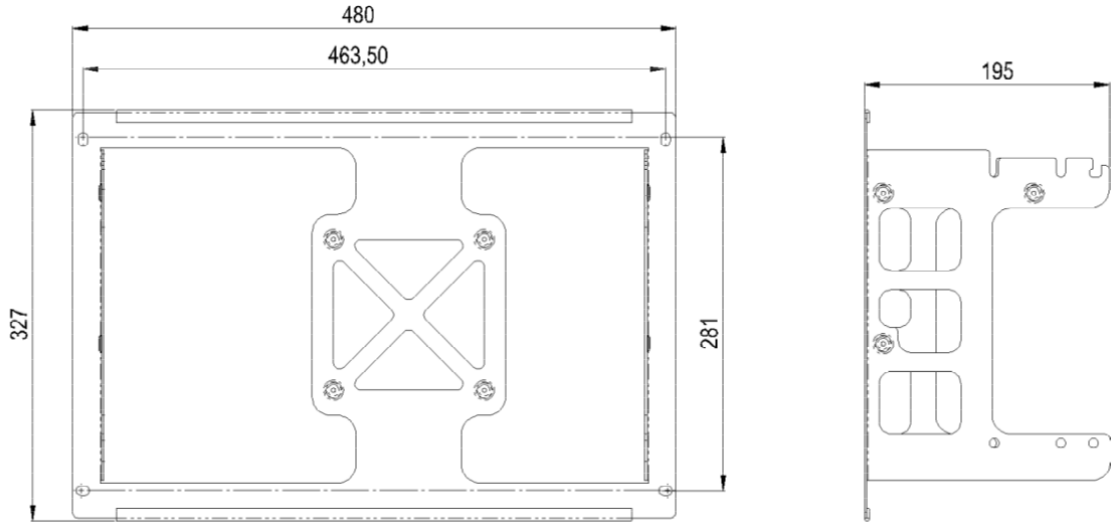

figure 6-1 ION-U Low Power RU mounting bracket

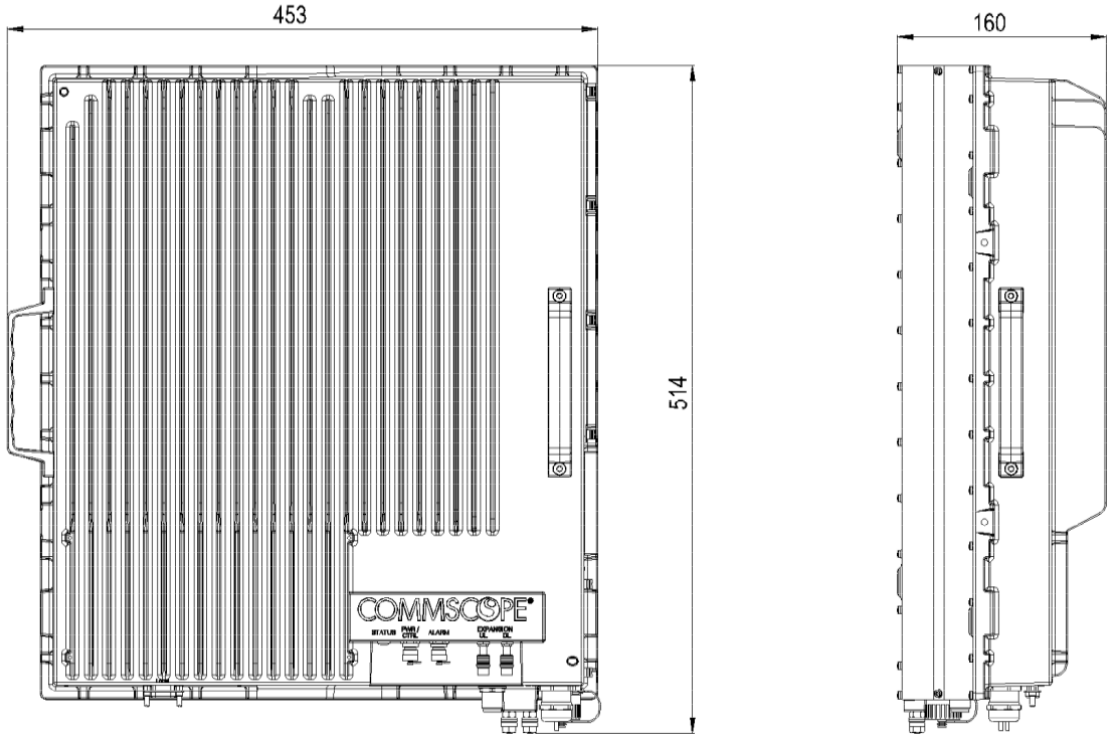

figure 6-2 ION-U Low Power Unit dimensions

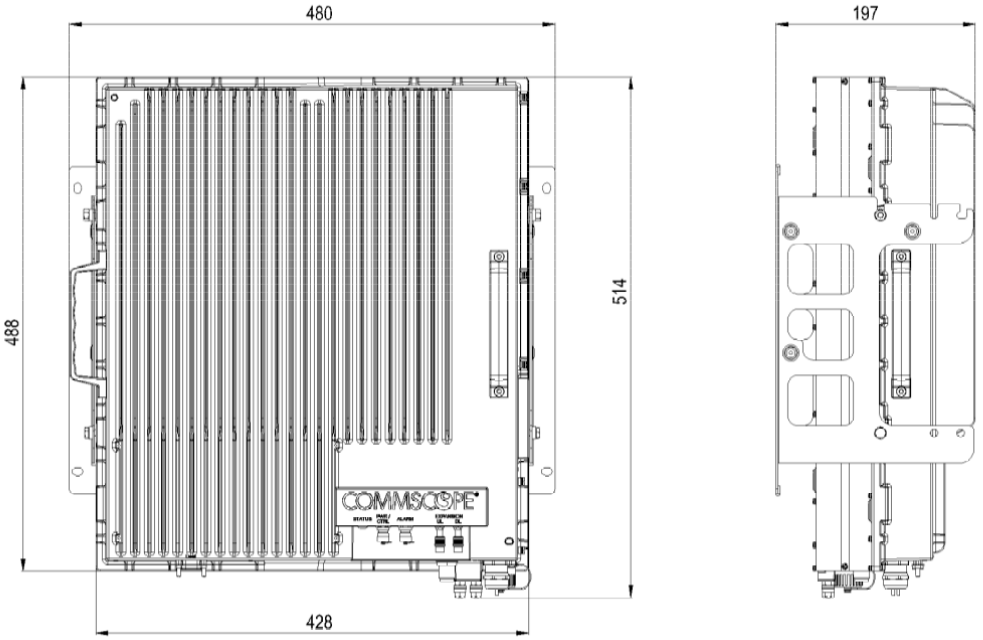

figure 6-3 Installation drawing of ION-U L Unit SISO

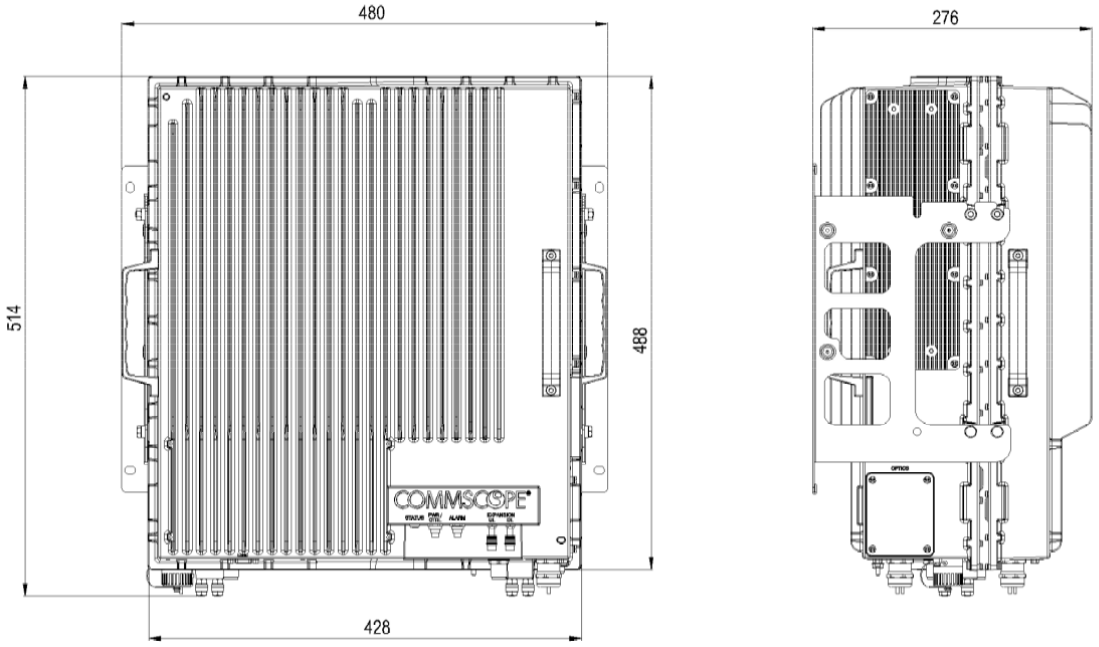

figure 6-4 Installation drawing of ION-U L Unit MIMO

6.2. Specifications

This manual is valid for the following Remote Unit:

ID No	Denomination
7669582-xxxx*	ION-U L 7/80-85/17P/19P
7669582-0001	ION-U L 7/80-85/17P/19P-VAC
7669582-0002	ION-U L 7/80-85/17P/19P-VDC
7669582-0003	ION-U L 7/80-85/17P/19P-VDC/100
7669582-0007	ION-U L 7/80-85/17EP/19P-VAC
7669582-0008	ION-U L 7/80-85/17EP/19P-VDC
7669582-0009	ION-U L 7/80-85/17EP/19P-VDC/100

* The xxxx suffix is the identifier for the specific configuration of the Remote Unit.

Please refer to the *ION-U_LP_RU_US_PA-106156.X-EN.GB* data sheets or our e-catalog http://www.commscope.com/catalog for the ION-U LP RU specifications.

6.3. Spare Parts

Maintenance of the RU should be performed on an FRU (Field Replaceable Unit) basis only. If any FRU not contained in the following list needs to be replaced, please contact customer service for additional instructions.

Designation:	ID No
Splice box	7693816-xx
Power Supply Unit Vac RPS150-Vac	7658962-xx
Power Supply Unit Vdc RPS150-Vdc	7658963-xx
Power Supply Unit Vdc 100 RPS150-Vdc/100	7662384-xx

The manufacturer reserves the right to replace the spare parts listed above by equivalent substitutes.

Note: Only the spare parts listed above are FRUs and can be replaced by the user. For replacement of any other parts, please send the entire Remote Unit back to the manufacturer.

7. List of Changes

Version	Changes	Release Date
M0200A5B		28-October-2015
M0200A5C	- added ION-U L 7/80-85/17EP/19P - chapters 3.3 and 4.2.3 updated, - chapter 4.2.7 added, antenna probe - chapter 4.3.1 updated, optical measurement - chapter 6.3 added, spare parts	Not yet released

8.Index

A

Alarm 35
Alarm port 46
Alarms
  Bite and Alarms 56
  External Inputs 58
  Handling of Alarms 56
  Status LED 57
Ant RF 35

B

Block Diagram
  ION-U L 7/80-85/17(E)P/19P RU 17

C

CE Declaration of Conformity (DoC) 13
Commissioning
  General 21
CommScope 13
Compliance 9
Connection Rules
  Optical-Fiber Cables 48
Connections
  Antenna 39, 40
  Power 37
Connectors
  Alarm connector 20
  Mains connector 20
  Pwr/Ctrl connector 20
Contact Addresses, Customer Support 14, 15
Coupling Port 45

E

Expansion DL 35
Expansion ports 46
Expansion UL 35

F

Fiber-Optical Components
  Cleaning Procedure 49
  System Installation 49

G

Grounding (Earthing) 36
Grounding Bolts 35

H

Health and Safety 8

I

Illustrations 64
Installation
  Electrical 33
  Mechanical 21
ION-U LP RU Ports 19

M

Mains (Vac/Vdc) 35
Mains (Vdc/100) 35
Mains connector 37
Maintenance 59
Mechanical installation
  Mounting bracket 22
  Threaded pins 25
MIMO applications 18
Mounting bracket
  To a pole 23
  To a wall 22

O

Optical cable installation 50
Optics DL 35
Optics UL 35

P

Ports
  Antenna Port 20
  Expansion Ports 20
  Optical Ports 20
  RS-232 port 20
Property Damage Warnings 8
PWR/CTRL 35

R

RS-232 35
RU AC power cable 37
RU DC power cable 37
RU Power Supply Replacement 60
RU Vdc/100 power cable 38

S

SISO applications 18
Spare Parts 59, 66
Splice box installation 53
Status 35

T

Troubleshooting 59

COMMSCOPE®