User's Manual

for

ION-B Systems

MN024-15

DISCLAIMER:

This document has been developed by CommScope, and is intended for the use of its customers and customer support personnel. The information in this document is subject to change without notice. While every effort has been made to eliminate errors, CommScope disclaims liability for any difficulties arising from the interpretation of the information contained herein. The information contained herein does not claim to cover all details or variations in equipment, nor to provide for every possible incident to be met in connection with installation, operation, or maintenance. This document describes the performance of the product under the defined operational conditions and does not cover the performance under adverse or disturbed conditions. Should further information be desired, or should particular problems arise which are not covered sufficiently for the purchaser's purposes, contact CommScope.

CommScope reserves the right to change all hardware and software characteristics without notice.

COPYRIGHT:

© Copyright 2015 CommScope Inc. All Rights Reserved.

This document is protected by copyright. No part of this document may be reproduced, stored in a retrieval system, or transmitted, in any form or by any means, electronic, mechanical photocopying, recording, or otherwise without the prior written permission of CommScope.

TRADEMARKS

All trademarks identified by ® or ™ are registered trademarks or trademarks, respectively, of CommScope. Names of products mentioned herein are used for identification purposes only and may be trademarks and / or registered trademarks of their respective companies.

Andrew Wireless Systems GmbH, 15-June-2015

TABLE OF CONTENTS

1.1. About CommScope 18

1.2. International Contact Addresses for Customer Support 19

2. INTRODUCING ION-B 21

2.1. The Features 21

2.2. Brief Description of ION-B 21

2.3. ION-B Features 22

2.4. Typical ION-B Applications 23

3. EQUIPMENT OVERVIEW 25

3.1. Introduction 25

3.2. The ION-B Remote Unit and its relevant accessories 25

3.3. The ION-B Master Unit 28

3.4. ION-B additional options 32

4. TFAX REMOTE UNIT (RU) 33

4.1. The Main Tasks of the TFAx Remote Unit 33

4.2. Different Types of Remote Units 34

4.3. Warnings (to be read before Remote Units are installed) 36
4.3.1. Dealing with optical output ports 36
4.3.2. Choosing a Proper Installation Site for the RU 36
4.3.3. Handling Optical Connections 36
4.3.4. Antenna Connections - Connectors 37
4.3.5. Cleaning Procedure for RF Cable Connectors 38
4.3.6. Antenna Cable Connector Assembly 41
4.3.7. Correct Positioning of the Remote Unit and its Power Supply 43
4.3.8. Power Supply 43
4.3.9. Visual Alarms 44
4.3.10. Automatic Gain Control (AGC) 44

4.4. Case A Remote Unit 45
4.4.1. Specifications 45
4.4.2. TFAx Case A Installation 46
4.4.3. Installing a Case A Remote Unit WITHOUT the TKA kit 47
4.4.4. Installation of the Case A Remote Unit WITH the TKA04 Installation Kit 48

4.5. Case B Remote Unit 52
4.5.1. Specifications 52
4.5.2. TFAx Case B Installation 53
4.5.3. Installing a Case B Remote Unit WITHOUT the TKA Kit 53
4.5.4. Installation of the Case B Remote Unit WITH the TKA04 Installation Kit 56

4.6. Case R2 Remote Unit 59
4.6.1. Specifications 59
4.6.2. TFAx Case R2 Installation 60

4.7. Case R2 MIMO Remote Unit 63
4.7.1. Specifications 63
4.7.2. TFAx Case R2 MIMO Installation 65

4.8. Case R2E Remote Unit 68
4.8.1. Specifications 68
4.8.2. TFAx Case R2E Installation 70

4.9. Case R4E Remote Unit 73
4.9.1. Specifications 73
4.9.2. TFAx Case R4E Installation 75

4.10. Case U Remote Unit 77
4.10.1. Specifications 77
4.10.2. Health and Safety 80
4.10.3. Property Damage Warnings 80
4.10.4. Compliance 81
4.10.5. TFAx Case U Mechanical Installation 84
4.10.5.1. Health and Safety for Mechanical Installation 84
4.10.5.2. Property Damage Warnings for Mechanical Installation 84
4.10.5.3. Wall-Mounting 85
4.10.6. Wall Mounting Procedure 87
4.10.7. TFAx Case U Electrical Installation 90
4.10.7.1. Health and Safety for Electrical Installation 90
4.10.7.2. Property Damage Warnings for Electrical Installation 90
4.10.7.3. Grounding (Earthing) 91
4.10.7.4. Mains Power Connection 92
4.10.7.5. Antenna Connection 95
4.10.7.6. Alarm Ports 96
4.10.8. Low Power RU Optical Installation 96
4.10.8.1. Optical-Fiber-Cable Connection - Rules 96
4.10.8.2. Optical cable installation 98
4.10.8.3. RU Power Supply Replacement 102

4.11. Remote Unit Start-up 107

4.12. CASE R2, R2E, and R4e Remote Unit settings through RS232 108

4.13. Troubleshooting 112
4.13.1. List of All Alarms 112
4.13.2. Quick Troubleshooting 113
4.13.3. Alarm Relay-Contact Troubleshooting 113
4.13.4. Fibre-Optic DL Troubleshooting 114

5. TFBX BOOSTER 116

5.1. The Main Tasks of the TFBX BOOSTER 116

5.2. Different Types of BOOSTERS 117

5.3. Warnings (to be read before BOOSTERS are installed) 118
5.3.1. Choosing a Proper Installation Site for the booster 118
5.3.2. Correct Positioning of the Booster and its Power Supply 118
5.3.3. Power Supply 118

5.4. Case B BOOSTER 119
5.4.1. Specifications 119
5.4.2. TFBx Case B Installation 121

5.5. Case R2 BOOSTER 123
5.5.1. Specifications 123
5.5.2. TFBx Case R2 Installation 124

5.6. Case U BOOSTER 126
5.6.1. Specifications 126
5.6.3. TFBx Case U applications 129
5.6.4. TFBx Case U Installation 130
5.6.5. TFBx Case U Power Supply Replacement 130

5.7. TFBx Booster Start-Up 131

5.8. Troubleshooting 132
5.8.1. List of All Alarms 132
5.8.2. Quick Troubleshooting 132

6. RACK-BASED MASTER UNIT 133

6.1. TPRNx4 Subrack 133
6.1.1. Major TPRN Features 133
6.1.2. TPRN Models 134
6.1.2.1. Passive subrack (TPRN04) 134
6.1.2.2. 220 Vac powered subracks (TPRN14 / TPRN24) 134
6.1.2.3. -48Vdc powered subrack (TPRN34) 134
6.1.3. TPRN Power Supply 135
6.1.4. TPRN Ports 136
6.1.4.1. RS232 serial port 136
6.1.4.2. RS485 port 137
6.1.4.3. Sub-D 15 poles male connector 138
6.1.5. TPRN Alarms 140
6.1.6. Warnings - recommended when designing or installing 141
6.1.6.1. Providing correct heat dissipation 141
6.1.6.2. Minimizing equipment costs 141
6.1.6.3. Setting the dip-switches in a multi subrack system 141
6.1.7. TPRN Installation 142
6.1.8. TPRN Start-up 144
6.1.9. TPRN Troubleshooting 145

6.2. Fast MiniRack TPRF31 146
6.2.1. Major TPRF Features 146
6.2.2. On/Off Switch and Power Supply 147
6.2.3. Reset and Store/Clear Buttons 147
6.2.4. Visual Alarms 148
6.2.5. TPRF31 Ports 148
6.2.5.1. RS232 Serial Port 148
6.2.5.2. RS485 Port 149
6.2.5.3. Power Supplying Ports 151
6.2.5.4. Auxiliary Inputs 151
6.2.5.5. External Alarms 152
6.2.6. Warnings - recommended when designing or installing 153
6.2.6.1. Installation site features 153
6.2.6.2. Providing correct heat dissipation 153
6.2.6.3. Setting the dip-switches in a multi subrack system 153
6.2.6.4. Safety 153
6.2.7. TPRF31 Installation 154
6.2.7.1. Mounting the TPRF31 in a rack 154
6.2.7.2. Mounting the TPRF31 to a wall 155

6.2.8. TPRF31 Start-Up 158
6.2.9. TPRF31 Troubleshooting 159

6.3. Master Optical TRX, TFLN 161
6.3.1. Main Tasks Carried Out by the TFLN Module 161
6.3.2. RF Ports 161
6.3.3. Optical Ports 162
6.3.4. TFLN Visual Alarms 162
6.3.5. TFLN Power Supply 163
6.3.6. Warnings - to be read before TFLN installation 163
6.3.6.1. Dealing with optical output ports 163
6.3.6.2. Handling optical connections 163
6.3.6.3. Inserting or removing TFLN modules 164
6.3.7. TFLN Installation 165
6.3.8. TFLN Start-Up 166
6.3.9. Removing a TFLN Module 167
6.3.10. TFLN Troubleshooting 167
6.3.10.1. Quick Troubleshooting Procedure 169
6.3.10.2. Fibre Optic UL Troubleshooting 171

6.4. Two-way Splitter/Combiner, TLCN2-W 173
6.4.1. Description 173
6.4.2. RF Ports 173
6.4.3. TLCN2-W Main Applications 174
6.4.4. TLCN2-W-W Insertion Loss 174
6.4.5. Warnings 174
6.4.6. TLCN2-W Installation 174

6.5. Eight-way Splitter/Combiner, TLCN8-W 175
6.5.1. Description 175
6.5.2. RF Ports 175
6.5.3. TLCN8-W Main Applications 176
6.5.4. TLCN8-W Insertion Loss 176
6.5.5. Warnings 176
6.5.6. TLCN8-W Installation 176

6.6. RF Dual Band Coupler TLDN 177
6.6.1. Description 177
6.6.2. RF Ports 177
6.6.3. TLDN Main Applications 178
6.6.4. TLDN Insertion Loss 178
6.6.5. Warnings 178
6.6.6. TLDN Installation 178

6.7. RF Tri Band Coupler TLTN 179
6.7.1. Description 179
6.7.2. TLTN Models 179
6.7.3. RF Ports 180
6.7.4. TLTN Main Applications 180
6.7.5. TLTN Insertion Loss 180
6.7.6. Warnings 180
6.7.7. TLTN Installation 180

6.8. RF Duplexer, TDPN 181
6.8.1. Description 181
6.8.2. TLDN Models 181
6.8.3. RF Ports 181
6.8.4. TDPN Main Applications 181
6.8.5. TDPN Insertion Loss 182
6.8.6. Warnings 182
6.8.7. TDPN Installation 182

6.9. Point of Interface TPOI 183
6.9.1. TPOI SISO 183
6.9.1.1. Description 183
6.9.1.2. TPOI Models 183
6.9.1.3. RF Ports 183
6.9.1.4. Setting Buttons and Display 184
6.9.1.5. TPOI Visual alarms 184
6.9.1.6. TPOI Power Supply 184
6.9.1.7. TPOI Insertion Loss 184
6.9.1.8. Warnings 184
6.9.1.9. Inserting or removing TPOI modules 185
6.9.1.10. TPOI Installation 185
6.9.1.11. TPOI Troubleshooting 186
6.9.2. TPOI MIMO 188
6.9.2.1. Description 188
6.9.2.2. RF Ports 188
6.9.2.3. Setting Buttons and Display 189
6.9.2.4. TPOI MIMO Visual alarms 189
6.9.2.5. TPOI Power Supply 189
6.9.2.6. TPOI Insertion Loss 189
6.9.2.7. Warnings 189
6.9.2.8. Inserting or removing TPOI modules 189
6.9.2.9. TPOI MIMO Installation 190
6.9.2.10. TPOI Troubleshooting 190

6.10. Passive Multiband Point of Interface TPOI-P 192
6.10.1. Description 192
6.10.2. TPOI-P Models 192
6.10.3. RF Ports 192
6.10.4. TPOI-P Main Applications 193
6.10.5. TPOI-P Insertion Loss 193
6.10.6. Warnings 193
6.10.7. TPOI-P Installation 193

7. WARNING AND SAFETY REQUIREMENTS 194

7.1. Equipment Symbols Used / Compliance 194

7.2. Environmental Conditions 194

7.3. Installation Site Features 194

7.4. Safety and Precautions During Installation or Maintenance 196

7.5. Power Supply Connection 197

7.6. Safety and Laser Precautions 198

7.7. Health and Safety 198

7.8. Electromagnetic Fields and RF Power 199

7.9. Warning Labels 202

8. TECHNICAL SUPPORT 203

8.1. Contact Addresses 203

8.2. DCCS Technical Support 203

8.3. Returning Equipment 204

9. APPENDIXES 205

9.1. Appendix A: System Commissioning 205

FIGURES AND TABLES

Figure 2-1 ION-B System Block Diagram....21
Figure 3-1 Case A Remote Unit....25
Figure 3-2 Case B Remote Unit....25
Figure 3-3 Case R2 Remote Unit....25
Figure 3-4 Case-R2E Remote Unit....25
Figure 3-5 Case-R4E Remote Unit....26
Figure 3-6 Case-U Remote Unit....26
Figure 3-7 TPRF32 Minirack....28
Figure 3-8 TPRN Subrack....28
Figure 3-9 TFLN Card....29
Figure 3-10 TDPN Card....29
Figure 3-11 TLDN Card....29
Figure 3-12 TLTN Card....30
Figure 3-13 TLCN2-W and TLCN8-W Cards....30
Figure 3-14 TPOIx and TPOI-Px Cards....30
Figure 3-15 TPOI MIMO Card....31
Figure 3-16 TSUN supervision unit, plug-in card....32
Figure 3-17 Interconnect-link master modules....32
Figure 3-18 Interconnect-link slave modules....32
Figure 3-19 TRSN Remote Powering units....32
Figure 4-1 Case A Remote Unit....34
Figure 4-2 Case B Remote Unit....34
Figure 4-3 Case –R2 Remote Unit....34
Figure 4-4 Case R2E Remote Unit....34
Figure 4-5 Case R4E Remote Unit....34
Figure 4-6 Case-U Remote Unit....34
Figure 4-7 Wrong handling of optical connections with ION-B RUs....37
Figure 4-8 Correct handling of optical connections with ION-B RUs....37
Figure 4-9 Splice box open/closed....37
Figure 4-10 90/264 VAC power supply, case B....43
Figure 4-11 -48 VDC power supply, case B....43
Figure 4-12 220 Vac/+5Vdc power adapter....44
Figure 4-13 -48 Vdc/+5Vdc power adapter....44
Figure 4-14 220 Vac/+28Vdc power adapter....44
Figure 4-15 TFAx Case A RU....45
Figure 4-16 Case A layout with dimensions....46
Figure 4-17 Layout of the power adapters with dimensions....46
Figure 4-18 Inside view of the splice tray, with the splice holder positioned properly....47
Figure 4-19 Splice tray closed....47
Figure 4-20 Dismount TKA cover....48
Figure 4-21 Layout of the TKA installation kit for TFAx Remote Unit, Case A....49
Figure 4-22 Installation: drill four holes....49
Figure 4-23 Splice tray....50
Figure 4-24 Mount the Remote Unit....50
Figure 4-25 Mount TKA cover....51
Figure 4-26 TFAx Case B RU (above) and TFAx Case B RU, Power version (below)....52
Figure 4-27 Case B layout with dimensions....54
Figure 4-28 Layout of the +5Vdc power adapter with dimensions....54
Figure 4-29 Layout of the +28Vdc power adapter with dimensions....55
Figure 4-30 Dismount TKA cover....56
Figure 4-31 Layout of the TKA installation kit for TFAx Remote Unit, Case B....57
Figure 4-32 Installation: drill four holes....57
Figure 4-33 Splice tray....57

Figure 4-34 Mount the Remote Unit 58
Figure 4-35 Mount TKA cover 58
Figure 4-36 Case R2 Remote Unit 59
Figure 4-37 Case R2 front view 59
Figure 4-38 Case R2 RU, mounted with power supply 60
Figure 4-39 Installation: drill four holes 61
Figure 4-40 Mount the PSU 61
Figure 4-41 Mount the RU 61
Figure 4-42 Mount the splice tray 62
Figure 4-43 Mount the splice box 62
Figure 4-44 Mount the connectors 62
Figure 4-45 Case R2 MIMO Remote Unit 63
Figure 4-46 Case R2 MIMO front view 63
Figure 4-47 Case R2 MIMO rear view 64
Figure 4-48 Case R2 RU, mounted with power supply 65
Figure 4-49 Installation: drill four holes 65
Figure 4-50 Mount the PSU 66
Figure 4-51 Mount the RU 66
Figure 4-52 Mount the splice tray 66
Figure 4-53 Mount the splice box 67
Figure 4-54 Mount the connectors 67
Figure 4-55 Case R2E Remote Unit 68
Figure 4-56 Case R2E front view 69
Figure 4-57 Case R2E rear view 69
Figure 4-58 Case R2E Remote Unit, mounted with power supply 70
Figure 4-59 Drilling layout 71
Figure 4-60 Fastening the power supply 71
Figure 4-61 Fastening the RU 71
Figure 4-62 Fastening the splice box 72
Figure 4-63 Case R4E Remote Unit 73
Figure 4-64 Case R4E front view 74
Figure 4-65 Case R4E rear view 74
Figure 4-66 Case R4E Remote Unit, mounted with power supply 75
Figure 4-67 Fastening the power supply and RU 76
Figure 4-68 Case U Remote Unit 77
Figure 4-69 Case U connectors 78
Figure 4-70 Wall-mounting bracket 85
Figure 4-71 RU threaded pin power supply side 86
Figure 4-72 RU threaded pin narrow side 86
Figure 4-73 Place RU onto wall mounting bracket 87
Figure 4-74 Install M6x12 screws and washers for single mount 88
Figure 4-75 Attach M6 nut to threaded pins for single mount 88
Figure 4-76 Completed RU Mount 89
Figure 4-77 Grounding bolts 91
Figure 4-78 Grounding bolt, schematic view 91
Figure 4-79 AC power cable 92
Figure 4-80 DC power cable 92
Figure 4-81 Vdc/100 power cable 93
Figure 4-82 Connect Mains plug 94
Figure 4-83 Antenna connection 95
Figure 4-84 Alarm Connector 96
Figure 4-85 Remove optics cover 98
Figure 4-86 Remove sealing nut 99
Figure 4-87 Split-seal and clamp jacket 99

Figure 4-88 Optical cables connected 100
Figure 4-89 Place cables into split-seal 100
Figure 4-90 Optical cable installed 101
Figure 4-91 Disconnect Mains power 102
Figure 4-92 RU power supply location 103
Figure 4-93 8 RU power supply screws 103
Figure 4-94 RU power supply with cables 103
Figure 4-95 RU power supply input cable 104
Figure 4-96 RU power supply output cable 104
Figure 4-97 RU with power supply removed 104
Figure 4-98 RU with replacement power supply 105
Figure 4-99 RU insert power supply 105
Figure 4-100 Reconnect Mains power 106
Figure 4-101 Troubleshooting overview 115
Figure 5-1 Case B Booster 117
Figure 5-2 Case R2 Booster 117
Figure 5-3 Case U Booster 117
Figure 5-4 220 Vac/+28Vdc power adapter 118
Figure 5-5 TFBx Case B Boosters, two different versions 119
Figure 5-6 Case B layout with dimensions 121
Figure 5-7 Layout of the power adapter with dimensions 121
Figure 5-8 Case R2 layout with dimensions 124
Figure 5-9 Layout of power adapter with dimensions 125
figure 5-10 Block diagram Case U booster 126
figure 5-11 Booster connectors and Status LEDs 127
figure 5-12 One RU one booster one antenna 129
figure 5-14 Two RUs one booster two antennas 129
Figure 6-1 TPRN subrack 133
Figure 6-2 Rear view of the TPRN subrack with 220Vac power supply (a) and with -48Vdc power supply (b) 134
Figure 6-3 85 to 265Vac inlet 135
Figure 6-4 -48Vdc inlet 135
Figure 6-5 Ground connector 135
Figure 6-6 Dip-switches on the TPRN backplane 136
Figure 6-7 Sub-D 15 poles male connector 138
Figure 6-8 Some of the installation accessories provided with the TPRN subrack 142
Figure 6-9 Mounting holes of TPRN 142
Figure 6-10 Intra-subrack distance 143
Figure 6-11 Power supply and ground terminals on the rear side of the TPRN subrack 143
Figure 6-12 Front view of the TPRF31 Fast MiniRack, both with free slots (a) and housing 2 TFLN master transceivers (b) 146
Figure 6-13 Rear view of the TPRF31 Fast MiniRack, powered -48 Vdc 146
Figure 6-14 Rear view of the TPRF31 Fast MiniRack: Power supply connectors and On/Off switches 147
Figure 6-15 Rear view of the TPRF31 Fast MiniRack: Reset and Store/Clear buttons 147
Figure 6-16 TPRF31 visual alarms 148
Figure 6-17 Dip-switches on the TPRF31 backplane 149
Figure 6-18 TPRF31 Power supplying ports on TPRF31 front side (a), Connection scheme of the power supply ports (b) 151
Figure 6-19 External Alarm Outputs (b) and Auxiliary Inputs (c) on the TPRF31 rear side (a) 152
Figure 6-20 Description of the External Alarm Outputs 152
Figure 6-21 Some of the installation accessories provided with the TPRF31 154
Figure 6-22 Rack-mounted Fast MiniRack, configuration example 154

Figure 6-23 Removal of brackets 155
Figure 6-24 Turning the brackets 155
Figure 6-25 Brackets adapted for wall-mounting....155
Figure 6-26 Fast MiniRack adapted for wall-mounting....156
Figure 6-27 Wall-mounted TPRF31 Fast MiniRack, hosting 2 TFLNs master unit transceivers 156
Figure 6-28 Mechanical layout for wall-mounting the TPRF31 Fast MiniRack....157
Figure 6-29 The TFLN Master Optical Transceiver....161
Figure 6-30 Visual alarms on the TFLN Master Optical Transceiver 162
Figure 6-31 Wrong handling of fiber optical bending....163
Figure 6-32 Correct handling of fiber optical bending 163
Figure 6-33 Installing a TFLN module....164
Figure 6-34 Proper cabling of SMA connectors on a TFLN front panel 164
Figure 6-35 Visual alarms on the TFLN Master Optical Transceiver. 164
Figure 6-36 AGC thresholds vs LED alerts 169
Figure 6-37 Flow-chart describing the quick troubleshooting procedure....170
Figure 6-38 Flow-chart describing the quick troubleshooting procedure....172
Figure 6-39 TLCN2-W splitter/combiner....173
Figure 6-40 TLCN8-W splitter-combiner 175
Figure 6-41 TLDN dual band duplexer....177
Figure 6-42 TLTN tri-band coupler....179
Figure 6-43 RF duplexer TPDN....181
Figure 6-44 TPOI point of interface....183
Figure 6-45 TPOI point of interface....188
Figure 6-46 TPOI-P passive point of interface 192
Figure 8-1 Flow-chart describing the main installation and commissioning steps....205
Figure 8-2 Case layout for a 1 sector with 4 TFLN master optical transceivers....206
Figure 8-3 Flow-chart describing the Master unit installation and cabling steps 207
Figure 8-4 Flow-chart describing the system start-up steps....208

table 1-1 List of international contact addresses 20
table 3-1 Different Cases of ION-B Units, with dedicated ION-B accessories 27
table 3-2 Overview of the Components and Accessories for the ION-B Master Unit 31
table 4-1 Remote Unit Reference Table....35
table 4-2 Status and Alarm LED Indication 44
table 4-3 Specified torques....84
table 4-4 AC power cable 92
table 4-5 DC power cable....92
table 4-6 Vdc/100 power cable....93
table 4-7 Alarm Connector 96
table 4-8 Remote Unit Alarms 112
table 5-1 Booster Reference Table 117
table 5-2 Status and Alarm LED Indication 120
table 5-3 Status and Alarm LED Indication 124
table 5-4 Booster's Alarm 132
table 6-1 Setting the RS232 baud rate through the dip-switch 5....136
table 6-2 Dip-switches address settings....138
table 6-3 Functional description of pins provided by sub-D male connector 139
table 6-4 Description of the alarms of the TPRN subrack 140
table 6-5 Meaning of the LEDs on the TPRF31 front-side 148
table 6-6 Setting the RS232 baud-rate through dip-switches 6 and 7....148
table 6-7 Dip-switches address settings....150
table 6-8 Setting the 485 Bus termination load with dip-switch 8 151
table 6-9 Alarm information available through external alarm contacts....152

table 6-10 Description of the alarms of the TPRF31 subrack.....159
table 6-11 Visual alarms on the TFLN Master Optical Transceiver.....162
table 6-12 LED alerts on the TFLN front panel.....165
table 6-13 LED alerts on the TFLN front panel.....168
table 6-14 LED alerts on the TPOI front panel 184
table 6-15 LED alerts on the TPOI front panel 185
table 6-16 LED alerts on the TPOI front panel 187
table 6-17 LED alerts on the TPOI MIMO front panel 189
table 6-18 LED alerts on the TPOI front panel 190
table 6-19 LED alerts on the TPOI front panel 191

1.1. ABOUT COMMSCOPE

CommScope is the foremost supplier of one-stop, end-to-end radio frequency (RF) solutions. Part of the *CommScope* portfolio are complete solutions for wireless infrastructure from top-of-the-tower base station antennas to cable systems and cabinets, RF site solutions, signal distribution, and network optimization.

CommScope has global engineering and manufacturing facilities. In addition, it maintains field engineering offices throughout the world.

Andrew Wireless Systems GmbH based in Buchdorf/ Germany, which is part of *CommScope*, is a leading manufacturer of coverage equipment for mobile radio networks, specializing in high performance, RF and optical repeaters. Our optical distributed networks and RF repeater systems provide coverage and capacity solution for wireless networks in both indoor installations and outdoor environments, e.g. tunnels, subways, in-trains, airport buildings, stadiums, skyscrapers, shopping malls, hotels and conference rooms.

Andrew Wireless Systems GmbH operates a quality management system in compliance with the requirements of ISO 9001 and TL 9000. All equipment is manufactured using highly reliable material. To maintain highest quality of the products, comprehensive quality monitoring is conducted at all fabrication stages. Finished products leave the factory only after a thorough final acceptance test, accompanied by a test certificate guaranteeing optimal operation.

This product meets the requirements of the R&TTE directive and the Declaration of Conformity (DoC) itself. A current version of the CE DoC is included in this manual CD delivered *. Any updated version of the DoC is available upon request from the local sales offices or directly from *CommScope* via the local Customer Support at one of the addresses listed in the following chapter.

According to the DoC, our "CE"-marked equipment can be used in all member states of the European Union.

☞ **Note**: **Exceptions of and national deviations from this intended use may be possible. To observe corresponding local particularities and regulations, please refer to the respective documents (also in national language) which are included in the manual CD delivered.**

* In case the Declaration of Conformity (DoC) for the product was not included in the manual CD delivered, it is available upon request from the local sales offices or directly from *CommScope at one of the addresses listed in the following chapter*.

To make the most of this product, we recommend you carefully read the instructions in this manual and commission the system only according to these instructions.

For technical assistance and support, please also contact the local office or *CommScope* directly at one of the addresses listed in the following chapter.

1.2. INTERNATIONAL CONTACT ADDRESSES FOR CUSTOMER SUPPORT

AMERICAS

Canada	
CommScope Canada	
Mail	505 Consumers Road, Suite 803 Toronto M2J 4V8, Canada
Phone	+1-905-878-3457 (Office) +1-416-721-5058 (Cell)
Fax	+1-905-878-3297
E-mail	wisupport@commscope.com

United States	
Andrew LLC, A CommScope Company	
Mail	620 North Greenfield Parkway Garner, NC 27529, U.S.A.
Phone	+1-888-297-6433
Fax	+1-919-329-8950
E-mail	wisupport@commscope.com

Caribbean & South American Region	
CommScope Cabos do Brasil Ltda.	
Mail	CALA Tech Support for *Distributed Coverage & Capacity Solutions (DCCS) products*: Rua Guaporanga, 49 Praça Seca – Rio de Janeiro – RJ ZIP: 21320-180, Brazil
Phone	+1-815-546-7154 (Cell) +55-15-9104-7722 (Office)
Fax	+ 55-15-2102-4001
E-mail	wisupport@commscope.com

Caribbean & Central American Region	
CommScope Mexico S.A. de C.V.	
Mail	CALA Tech Support for *Distributed Coverage & Capacity Solutions (DCCS) products*: Av. Insurgentes Sur 688, Piso 6 Col. Del Valle, CP: 03100 Mexico City, Mexico
Phone	+52-55-1346-1900 (Office)
Fax	+52-55-1346-1901
E-mail	wisupport@commscope.com

APAC

China, India and Rest of Asia	
Andrew International Corporation	
Mail	Room 915, 9/F Chevalier Commercial Centre 8 Wang Hoi Rd Kowloon Bay, Hong Kong
Phone	+852-3106-6100
Fax	+852-2751-7800
E-mail	wisupport.China@commscope.com

Australia & New Zealand	
Andrew Corporation (Australia) Pty Ltd.	
Mail	Unit 1 153 Barry Road Campbellfield VIC 3061, Australia
Phone	+613-9300-7969
Fax	+613-9357-9110
E-mail	wisupport.Australia@commscope.com

Africa & Middle East

Middle East & North Africa	
CommScope Solutions International Inc. (Branch)	
Mail	PO Box 48 78 22 Unit 3206, Floor 32, Jumeirah Business Center 5, Jumeirah Lakes Towers, Dubai, United Arab Emirates
Phone	+971 4 390 09 80
Fax	+971 4 390 86 23
E-mail	wisupport@commscope.com

South Africa	
Andrew Wireless Solutions Africa (PTY) LTD	
Mail	11 Commerce Crescent West Eastgate, Sandton PO Box 786117 Sandton 2146 South Africa
Phone	+ 27 11-719-6000
Fax	+ 27 11-444-5393
E-mail	wisupport@commscope.com

EUROPE

United Kingdom	
Andrew Wireless Systems UK Ltd	
Mail	Unit 15, Ilex Building Mulberry Business Park Fishponds Road Wokingham Berkshire RG41 2GY, England
Phone	+44-1189-366-792
Fax	+44-1189-366-773
E-mail	wisupport.uk@commscope.com

Germany	
Andrew Wireless Systems GmbH	
Mail	Industriering 10 86675 Buchdorf Germany
Phone	+49-9099-69-0
Fax	+49-9099-69-930
E-mail	wisupport@commscope.com

Austria	
Andrew Wireless Systems (Austria) GmbH	
Mail	Weglgasse 10 2320 Wien-Schwechat Austria
Phone	+43-1706-39-99-10
Fax	+43-1706-39-99-9
E-mail	wisupport.austria@commscope.com

Italy	
CommScope Italy S.r.l., Faenza, Italy	
Mail	Via Mengolina, 20 48018 Faenza (RA) Italy
Phone	+39-0546-697111
Fax	+39-0546-682768
E-mail	wisupport.italia@commscope.com

Czech Republic	
CommScope Solutions Czech Republic C-Com, spol. s r.o	
Mail	U Moruší 888 53006 Pardubice, Czech Republic
Phone	+49 871 9659171 (Office) +49 171 4001166 (Mobile)
Fax	+49 871 9659172
E-mail	wisupport@commscope.com

Scandinavia	
Andrew Norway (AMNW)	
Mail	P.O. Box 3066 Osloveien 10 Hoenefoss 3501 Norway
Phone	+ 47 32-12-3530
Fax	+ 47 32-12-3531
E-mail	wisupport@commscope.com

France	
CommScope France	
Mail	Immeuble Le Lavoisier 4, Place des Vosges 92052 Courbevoie, France
Phone	+33-1 82 97 04 00
Fax	+33-1 47 89 45 25
E-mail	wisupport@commscope.com

Switzerland	
CommScope Wireless Systems AG	
Mail	Tiergartenweg 1 CH-4710 Balsthal Switzerland
Phone	+41-62-386-1260
Fax	+41-62-386-1261
E-mail	wisupport.ch@commscope.com

Iberia Region - Spain & Portugal	
Andrew España S.A. A CommScope Company	
Mail	Avda. de Europa, 4 - 2ª pta. Parque Empresarial de la Moraleja Alcobendas, Madrid 28108, Spain
Phone	+34-91-745-20 40
Fax	+34-91-661-87 02
E-mail	wisupport.iberia@commscope.com

table 1-1 List of international contact addresses

2. INTRODUCING ION-B

2.1. THE FEATURES

ION-B is an innovative platform designed in order to provide an effective and flexible coverage to a large variety of indoor scenarios.

Thanks to its high modularity, its low power consumption, and its full-transparency to protocols and modulation formats, ION-B is the perfect plug&play solution to distribute any wireless standard (including GSM, GPRS, EDGE, CDMA, W-CDMA, and LTE to the in-building environments requiring reliable and interference-free communications, as well as high traffic capacity and maximum flexibility about future expansions.

These unique features make the ION-B platform suitable also for applications to critical areas experiencing difficulties in establishing and keeping phone calls, while its compact design always guarantees a minimum aesthetic impact.

2.2. BRIEF DESCRIPTION OF ION-B

ION-B is a Distributed Antenna System (DAS) based on the Radio-over-Fiber (RoF) technology, and capable of carrying wireless mobile signals through the 700MHz - 2700MHz frequency range regardless of their protocol and their modulation format.

The system has two basic components, a Master Unit and a Remote Unit. The Master Unit is made of one or more subracks typically connected to the BTS (Base Transceiver Station) through either a repeater (RF interface) or a coaxial cable.

Each Remote Unit is connected with a dedicated pair of single-mode optical fibres (one for UL and one for DL) to the Master Unit. These optical fibres work on 1310 nm wavelength and provide low losses and almost unlimited bandwidth, available for future system developments.

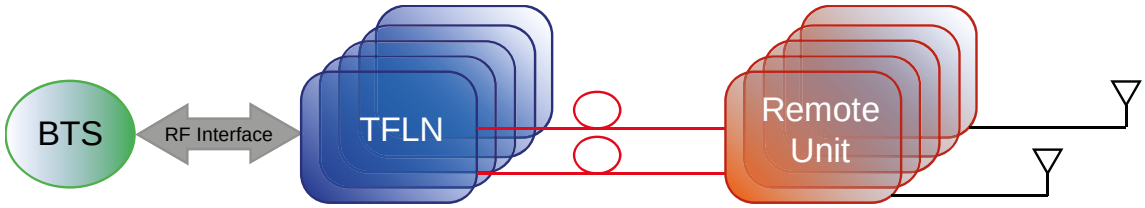

Figure 2-1 ION-B System Block Diagram

ION-B is a modular system whose basic components are:

- one Master Unit made of one or more subracks, each providing 12 module slots. Each slot can host either an active or a RF passive device (chosen among the wide range of ION-B options), in order to meet the planned design requirements;
- a variable number of Remote Units (TFAx), whose function is feeding the antenna passive network;
- a proper number of indoor antennas, suitable to provide radio coverage to the area. ION-B is fully compatible with any type of indoor antennas;
- the optical cables required to connect the 19" subracks to the TFAx.

2.3. ION-B FEATURES

The following lines report a brief summary of ION-B main features:

- multiband 2G, 2.5G, 3G, and 4G compatible: ION-B is completely transparent to any transmission protocol and modulation format, and it can distribute any 2G, 2.5G, 3G, and 4G wireless standard. In addition, it allows to carry also the WLAN (802.11b/g) service over the same infrastructure;
- modular configuration for flexible design: by properly setting some parameters like the amount of RUs and the antenna locations, the ION-B architecture can follow the environment specific features in order to obtain the most effective radio-coverage of the indoor area. The modularity of the system allows easy modifications for future growth and increasing traffic;
- easy to install: the intelligent plug & play ION-B system includes an Automatic Gain Control (AGC), that eliminates system gain variations regardless of optical loss. This avoids the need for field adjustments, thus reducing design, installation and optimization time.
- low-power consumption: establishing a "quasi line-of-sight propagation" towards all mobile phones inside the area, ION-B works with low power levels. Low power levels have two great advantages: 1) allow mobile phones to work at lower power levels, thus limiting the radiated emissions and increasing their battery life; 2) allow a better control of interference effects between adiacent cells.
- central supervision functions: all individual alarms of ION-B system are available to both local and remote connections. Detailed alarm information is provided by special software (i.e. by Supervision or Maintenance software tools) running on a locally connected host, as well as any information about alarm status and alarm history is available to remote connections via TCP/IP protocols, SNMP agent, or HTTP servers. This alarm information is visible also by means of LEDs present on the front panels of both the MU and the RUs;
- multiple-carriers system: there are no restrictions on the number of carriers that the ION-B can convey. Obviously, the more carriers per service, the less power per carrier;
- remote power supply: in case mains cannot be used for the Remote Units, ION-B offers a centralised power supply option, which distributes both a DC low-voltage (-48V) power and the optical signals through a composite fibre optic/copper cable;

- wide variety of RF passive devices: the connections between the DAS and the local BTSs are able to be arranged so as to get the best fit for the customers needs. ION-B equipment provides RF splitters/combiners, cross band couplers, attenuators, and duplexers for UL/DL paths, thus allowing maximum in design flexibility;
- high reliability: high MTBF (Mean Time Between Failure).

2.4. TYPICAL ION-B APPLICATIONS

Due to its unique features, the ION-B is an ideal solution for radio coverage in a variety of situations:

Multi-operator shared infrastructures: each mobile operator has its own carrier which needs to be transported without interfering with the others. The ION-B is capable of transmitting multiple carriers simultaneously while providing independent level adjustments for each of them, ensuring maximum performance and reducing infrastructure costs.

High rise buildings: RF signals from surrounding macrocells or external BTSs are usually quite strong inside high rise buildings and can cause so much interference that indoor mobile communications often become impossible. By strategically placing antennas along the exterior walls of the building, the signal to noise ratio can be optimized. This interference control solves many problems, such as the "ping pong" effect that sometimes is experienced when a mobile frequently changes from indoor to outdoor coverage.

Exhibitions, conventions, and shopping centers: the critical aspect of these environments is their high traffic loads, which are furthermore also highly variable. Thus, the main goal in these cases is to set up radio coverage enabling the effective management of these variable traffic loads, with neither undervalued nor overvalued infrastructure expenses. A unique feature of the ION-B is that RF frequencies can be allocated quickly when and where they are needed, thus reducing implementation costs. This makes the ION-B an ideal solution for temporary or last minute requests (such as conferences).

Airports: require both modular and flexible radio coverage in order to meet their current needs while also foreseeing future expansions. The ION-B is able to manage heavy traffic loads, providing a high level of quality with minimum environmental impacts, its modularity also allows for future expansions.

Corporate buildings: inside a corporate building, frequent disruptions during mobile communications may limit business transactions. These environments are often complex and densely populated while having specific requirements: heavy traffic capacity, high expectations regarding quality of service, full compatibility with wireless standards and future expandability. The ION-B guarantees high quality radio coverage in all of the above conditions and maintains maximum flexibility while managing any possible traffic conditions.

Subways and densely populated metropolitan areas: These areas are distinguished by large surface areas, and may require RUs to be placed far away from the BTSs. The ION-B guarantees signal integrity for distances up to 3km, while through the wideband interconnect link option, distances of 20km can be reached. Moreover,

these environments require gradual investments, because initially operators tend to provide radio coverage only in the busiest areas, and then extend it in order to reach complete coverage later.

The modularity of the ION-B helps operators to gradually expand the system. Often, large cities set up seamless and reliable radio systems for emergency services. In these cases, the required RF infrastructure needs to be unobtrusive and environmental friendly; this can be achieved using an ION-B DAS. When redundancy is required, two interleaved ION-B systems can be used, management and supervision for these systems can be remotely established by means of an external modem and an open protocol such as SNMP.

3. EQUIPMENT OVERVIEW

3.1. INTRODUCTION

The basic components of an ION-B system are the following:

- a Master Unit, able to bring the mobile signals from the BTS to different Remote Units and vice-versa, thus remotising the distribution and collection of any mobile signals via fiberoptic cables;
- a variable number of Remote Units, conveying and receiving mobile signals through low-power antennas.

A brief introduction to the main components of the ION-B system's Master and Remote Units is presented in the following section. The details of each component can be found in the subsequent sections of this manual.

3.2. THE ION-B REMOTE UNIT AND ITS RELEVANT ACCESSORIES

Figure 3-1 Case A Remote Unit

Figure 3-2 Case B Remote Unit

Figure 3-3 Case R2 Remote Unit

Figure 3-4 Case-R2E Remote Unit

Figure 3-5 Case-R4E Remote Unit *Figure 3-6 Case-U Remote Unit*

The Remote Unit (TFAx) is a device which provides optical-to-electrical downlink conversion and electrical-to-optical uplink conversion, thus allowing a bidirectional transmission of signals between the Master Unit and the remote antennas. It is available in 3 different power configurations (Low/Medium/High), housed by 5 different architectures (Case A, Case B, Case R2, Case R2E, Case R4E, and Case U), so as to fulfill different coverage and band requirements.

In downlink, each TFAx receives an optical signal from the Master Unit, performs an optical-to-RF conversion, and transmits the resulting signal to the antenna ports.

In uplink, it receives an RF signal from the remote antennas, provides an RF-to-optical conversion, and conveys the converted signal to the Master Unit through optical fibers.

The ION-B Remote Units are available both with power supply 90÷264 Vac and with power supply -60÷-36 Vdc. Each ION-B Remote Unit is provided with a suitable internal or external power adapter.

Last, each ION-B Remote Unit has a wideband auxiliary channel, which can be exploited for dedicated RF distribution through external boosters.

Remote Units, Boosters and Accessories		
Unit name/ Module name	Description	Dimensions (L x W x H)
TFAx-case A	Remote Unit	200 x 240 x 38 (mm)
TFAx Case B	Remote Unit	240 x 240 x 38 (mm)
TFAx Case R2	Remote Unit	330 x 250 x 122.5 (mm)
TFAx Case R2E	Remote Unit	513 x 250 x 125 (mm)
TFAx Case R4E	Remote Unit	515 x 335 x 125 (mm)
TFAx Case U	Remote Unit (incl. connectors)	514 x 480 x 205 (mm)
TFBx case B	Booster	240 x 240 x 38 (mm)
TFBx case R2	Booster	330 x 250 x 122.5 (mm)
TFBx Case U	Booster	514 x 480 x 205 (mm)
TKA04	Remote Unit installation kit	340 x 240 x 55 (mm)
TPSN 1/05-40	External power supply	175 x 80 x 54 (mm)
TPSN 3/05-30	External power supply	175 x 80 x 51 (mm)
TPSN 1/28-80	External power supply	168 x 78 x 46 (mm)
TPSN 1/32-80	External power supply	168 x 78 x 46 (mm)
TPSN 3/28-80	External power supply	168 x 78 x 46 (mm)
TPSN 3/32-80	External power supply	168 x 78 x 46 (mm)
TPSN 1/28-120	External power supply	160 x 76 x 47 (mm)
TPSN 3/28-100	External power supply	175 x 80 x 51 (mm)
TPSN1/28-150	External power supply	228 x 68 x 39 (mm)
TPSN3/28-130	External power supply	175 x 80 x 150 (mm)

table 3-1 Different Cases of ION-B Units, with dedicated ION-B accessories

3.3. THE ION-B MASTER UNIT

The ION-B Master Unit is a widely-flexible system. Its modular feature allows it to be developed both for simple installation-friendly, unobtrusive applications to complex installations, involving a virtually unlimited number of subracks, and distributed through several floors of a building or through a 20km distance.

The following text presents a brief overview of the components of these units.

The TPRF31 Fast MiniRack is a 19" x 1HE fast-MiniRack housing 2 slots: it can therefore accommodate 2 of the single-slots (7TE x 4HE) ION-B cards presented in the following. Thanks to its turnable brackets, the TPRF31 is suitable both for wall and rack-mounting, and can therefore be used both as a stand-alone unit (for simple ION-B installations) and as an integration of a bigger and more complex ION-B system.

Figure 3-7 TPRF32 Minirack

The TPRN sub-rack is a 19"x 4HE subrack with 12 slots, each one sized 7TE x 4HE. As each ION-B module takes up one or two slots, each Master Unit can host up to 12 modules, depending on the design configuration and requirements.

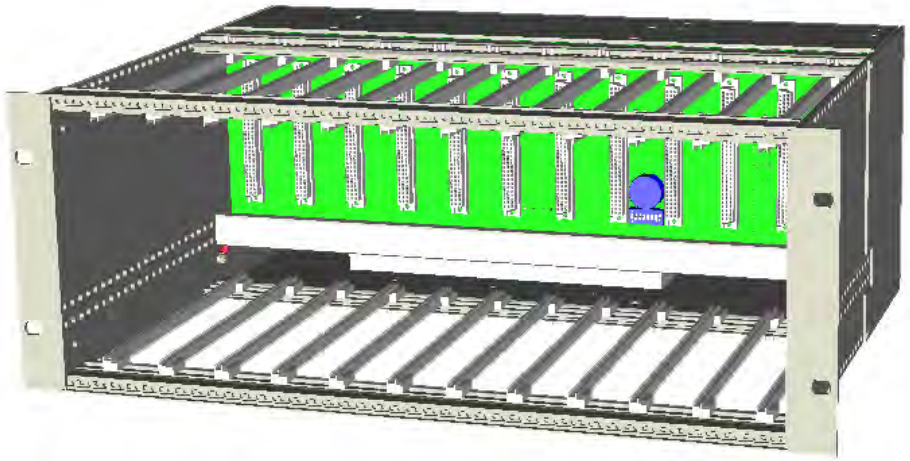

Figure 3-8 TPRN Subrack

Figure 3-9 TFLN Card

The Master Optical TRX (TFLN or TFLNW): in downlink, it provides an RF-to-optical conversion of the signal coming from the BTS, and transmits it to 4 optical outputs, so as to feed 4 TFAx (TFLNW: 2 TFAH-EU). In uplink, it provides optical-to-RF conversion for 4 optical signals coming from the RUs, and it combines them into a single RF output, while providing automatic gain control in order to balance the fibre losses.
Module dimensions:
Width = 7TE, Height = 4HE

Figure 3-10 TDPN Card

The Duplexer (TDPN): it combines the downlink (DL) and the uplink (UL) paths into a single one, while maintaining the required isolation.
The module dimensions are:
Width = 7TE, Height = 4HE

Figure 3-11 TLDN Card

The dual band coupler (TLDN): in downlink, it combines a low-band RF signal (700 to 1000 MHz) and a high-band RF signal (1700 to 2500 MHz) into a common RF port; in uplink, it splits a composite signal between a low-band RF port and a high-band RF port.
Module dimensions are:
Width = 7 TE, Height = 4 HE.

Figure 3-12 TLTN Card

The tri-band coupler (TLTN): in downlink, it combines a low-band signal, a middle-band signal, and a high-band signal into a communal one; in uplink, it splits the triple band signal among the three RF single band paths.
Module dimensions are:
Width = 7 TE, Height = 4 HE.

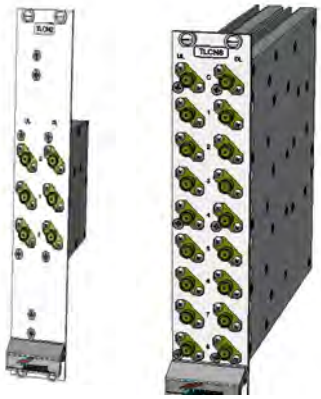

Figure 3-13 TLCN2-W and TLCN8-W Cards

TLCNx-W is a family of RF splitters/combiners which can be used in different situations, such as:

- To connect a BTS with several master optical TRXs. In uplink, the TLCNx-W combines RF signals which come from different master optical TRXs into a common RF signal entering the BTS. In downlink, the TLCNx-W splits the composite RF signal which comes from the BTS into more RF ports, entering different master optical TRXs.
- To connect several BTSs to a master unit. In downlink, the TLCNx-W combines the RF signals coming from different BTSs into a common RF signal, entering the master unit. In uplink, the TLCNx-W splits the composite RF signal coming from the master unit into more RF signals entering different BTSs.

Module dimensions are:
Width = 7 TE, Height = 4 HE.

Figure 3-14 TPOIx and TPOI-Px Cards

TPOIx includes duplexer, digital adjustable attenuator, downlink automatic level control (ALC) and cross band coupler functionalities for triple bands which allows to feed the master optical TRX with proper levelling.
TPOI-Px includes duplexer and cross band coupler functionalities for triple bands which allows to feed the master optical TRX.
Module dimensions are:
Width = 7 TE, Height = 4 HE.

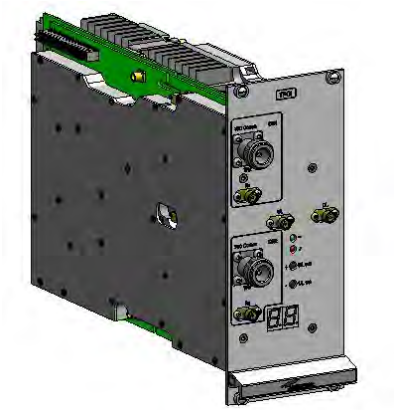

Figure 3-15 TPOI MIMO Card

TPOIx/x is an integrated point of interface which enables MIMO applications. It includes double IF conversion.
Module dimensions are:
Width = 14 TE, Height = 4 HE.

An overview of the basic components of the ION-B Master Unit is shown in the following table.

Basic components of ION-B Master Units		
Unit name/ Module name	Description	Dimensions, H x W (x D)
TPRF31	Fast MiniRack	19" x 1HE x 286mm
TPRN04	Passive subrack	19" x 4HE x 350mm
TPRNx4	Active subrack	19" x 4HE x 350mm
TFLNx	Master Optical TRX	7TE x 4HE
TLCN 2-W	2-way splitter	7TE x 4HE
TLCN 8-W	8-way splitter/combiner	7TE x 4HE
TPOIx	Point of interface	7TE x 4HE
TPOIx/x	MIMO Point of interface	14TE x 4HE
TPOI-Px	Passive point of interface	7TE x 4HE
TDPNx	UL/DL duplexer	7TE x 4HE
TLDNx	Dual band coupler	7TE x 4HE
TLTNx	Tri band coupler	7TE x 4HE

table 3-2 Overview of the Components and Accessories for the ION-B Master Unit

3.4. ION-B ADDITIONAL OPTIONS

The basic ION-B structure described above can be expanded further or supported by a range of ION-B options, including:

- A supervision unit (TSUN), enabling to supervise and manage the ION-B system through any PC or Laptop, thanks to a web-interface supporting the TCP/IP, FTP, HTTP, protocols, and fully compatible with general purpose SNMP managers.
- A wide range of Interconnect Link options (TIL), i.e. a set of master-slave modules which enable to expand the ION-B system through additional subrack stations, up to 20 km away from the main one.
- A Remote Powering Unit (TRSN), providing -48Vdc power supplying through composite fiberoptic/copper cables

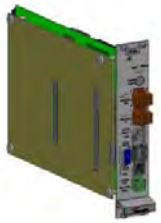

Figure 3-16 TSUN supervision unit, plug-in card

Figure 3-17 Interconnect-link master modules

Figure 3-18 Interconnect-link slave modules

Figure 3-19 TRSN Remote Powering units

We strongly recommend contacting the reference Commscope salesperson or product line manager for detailed information on the main ION-B additional options.

4. TFAX REMOTE UNIT (RU)

4.1. THE MAIN TASKS OF THE TFAX REMOTE UNIT

Downlink (DL):

- Optical-to-RF conversion of the input optical signal
- Automatic Gain Control (AGC) of each converted signal in order to compensate optical losses
- RF amplification: the converted RF signal is boosted in order to maintain a good signal-to-noise ratio
- RF filtering: a proper filter rejects the spurious emissions
- RF duplexing and splitting: the boosted RF signal is conveyed to one or two antenna ports according to the different versions

Uplink (UL):

- RF amplification: a low noise amplifier boosts the signal received from antennas in order to maintain a good signal-to-noise ratio
- RF filtering: the boosted signal is cleaned of the spurious emissions
- Automatic Level Control (ALC): the RF signal level is adjusted according to blocking requirements
- RF-to-optical conversion of the signal, which is finally conveyed to the output optical port

4.2. DIFFERENT TYPES OF REMOTE UNITS

In order to allow radio coverage with different power and band requirements, the ION-B architecture provides a wide variety of RUs. This allows to choose the solution which best fits the individual coverage and environmental demands.

Figure 4-1 Case A Remote Unit

Figure 4-2 Case B Remote Unit

Figure 4-3 Case –R2 Remote Unit

Figure 4-4 Case R2E Remote Unit

Figure 4-5 Case R4E Remote Unit

Figure 4-6 Case-U Remote Unit

Depending on the bands where radio coverage has to be provided and on the signal power required to cover the environment, the topology / case type of the RU will be determined.

Please follow the instructions described in the section corresponding to the case type (A, B, R2, R2E, R4E, and U) of your particular RU.

The case type of your RU can easily be identified through the above figures. Alternatively, contact your Sales representative or product line manager.

	Product Code	Case	RF Port	Power Supply	Bulletin Code
Low Power	TFAN 40	A	2	Internal	-
	TFAN 50	A	2	Internal	PA-101343-EN
	TFAN91/18/21	B	2	TPSN1/05-40 TPSN3/05-30	PA-101586-EN
Medium Power	TFAM 21	A	2	TPSN1/05-40 TPSN3/05-30	PA-100592-EN
	TFAM 90/21	B	2	TPSN1/05-40 TPSN3/05-30	PA-100582-EN
	TFAM 91/21	B	2	TPSN1/05-40 TPSN3/05-30	PA-100583-EN
	TFAM 18/21P	B	2	TPSN1/32-80 TPSN3/32-80	PA-102128-EN
	TFAM 91/18/21	R2	1	TPSN1/28-80 TPSN3/28-80	PA-101508-EN
	TFAM 80/19	B	2	TPSN1/05-40 TPSN3/05-30	PA-100801-EN
	TFAM 85/19	B	2	TPSN1/05-40 TPSN3/05-30	PA-100805-EN
	TFAM 17/19	B	2	TPSN1/05-40 TPSN3/05-30	PA-101848-EN
	TFAM 85/18	B	2	TPSN1/05-40 TPSN3/05-30	PA-100808-EN
	TFAM 85/21	B	2	TPSN1/05-40 TPSN3/05-30	PA-100809-EN
	TFAM 85/18/21	R2	1	TPSN1/28-80 TPSN3/28-80	PA-102111-EN
	TFAM 80/92/19E	B	2	TPSN1/05-40 TPSN3/05-30	PA-101058-EN
	TFAM 80/92/19EP	R2	1	TPSN1/28-80 TPSN3/28-80	PA-102127-EN
High Power	TFAH-US85/19	R2E	1	TPSN1/28-120 TPSN3/28-100	PA-102509-EN
	TFAH-US6B	R2E	1	TPSN1/28-120 TPSN3/28-100	PA-103140-EN
	TFAH-US7B	R4E	1	TPSN1/28-150 TPSN3/28-130	PA-104389-EN
	TFAH-EU 26/26	R2	2	TPSN1/28-150 TPSN3/28-130	see Commscope e-catalog
	TFAH-ES70/80	U	1	Internal	see Commscope e-catalog
	TFAH-ES70/80/50	U	1	Internal	

table 4-1 Remote Unit Reference Table

4.3. WARNINGS (TO BE READ BEFORE REMOTE UNITS ARE INSTALLED)

The warnings listed below refer to all RUs. Please read them carefully before starting the installation.

4.3.1. Dealing with optical output ports

TFAx RUs contain semiconductor lasers. Invisible laser beams may be emitted from the optical output ports. Do not look towards the optical ports while equipment is switched on.

4.3.2. Choosing a Proper Installation Site for the RU

- TFAx RUs have to be installed as close as possible to the radiating antennas, in order to minimize coaxial cable length, thus reducing downlink power loss and uplink noise figures.
- When positioning the TFAx RU, be sure to place related antennas in such a way as to minimize the minimum coupling loss (MCL), in order to avoid blocking.
- The TFAx RU is designed to be fastened to walls, ceilings, or other flat surfaces (TKA installation kits are available, they provide a protective cover for the TFAx Remote Unit, while making installation easier and faster).
- It is advisable mounting TFAx RU with optical connectors downwards to safe the optical connectors from improper dirt.

4.3.3. Handling Optical Connections

- When inserting an optical connector, take care to handle it in a way that the optical fibre is not damaged. Optical fibres have to be single-mode (SM) 9.5/125µm.
- Typically, ION-B equipment is provided with SC-APC optical connectors (other connectors are provided upon request). Inserting any other connectors will result in severe damage.
- Do not force or stretch the fibre pigtail with curvature radius of less than 5cm. See Figure 4-7 Wrong handling of optical connections with ION-B RUs and Figure 4-8 Correct handling of optical connections with ION-B RUs for optimal fibre cabling.
- Remove the adapter caps only just before making connections. Do not leave any SC-APC adapters open, as they attract dirt. Unused optical connectors must always be covered with their caps.
- Do not touch the connector tip. Clean it with suitable material before inserting each connector into its sleeve. If connector tips require cleaning, use only pure ethyl alcohol.

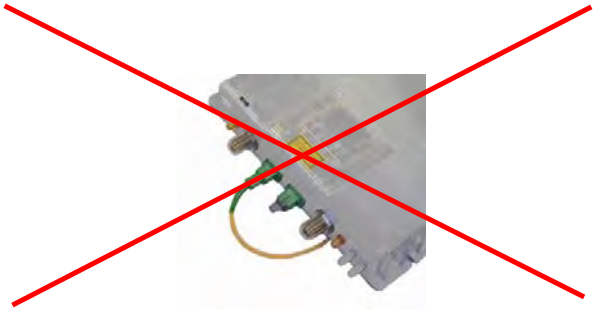

Figure 4-7 Wrong handling of optical connections with ION-B RUs

Figure 4-8 Correct handling of optical connections with ION-B RUs

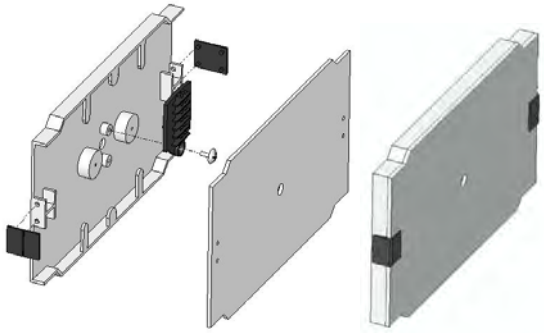

Figure 4-9 Splice box open/closed

4.3.4. Antenna Connections - Connectors

For mounting the cable connectors, it is recommended to refer to the corresponding documentation of the connector manufacturer. The bending radius of the cables must remain within the given specifications.

For the selection of RF cables, it should be considered that, on the one hand, a cable with higher loss is less expensive but, on the other hand, it impairs performance.

Notice: Use an appropriate torque wrench for the coupling torques:

- for N-type connectors (2 N-m / 20 in lb) with 13/16 in opening, e. g. item no. 244379 available from the *CommScope e-catalog*
- for 7/16 DIN-type (25 N-m / 19 ft lb) with 1 ¼ in opening, e. g. item no. 244377 available from the *CommScope e-catalog*
- for 4.3-10 type connectors (5 N-m, 44 in lb) with 22 mm (7/8) in opening

Do NOT use your hands or any other tool (e.g. a pair of pliers). This might cause damage to the connector and lead to a malfunction of the Extension Unit.

Attention: To minimize passive inter-modulation (PIM) distortion, attention has to be paid to the physical condition of the connector junctions:

- Do not use connectors that show signs of corrosion on the metal surface.
- Prevent the ingress of water or dirt into the connector.
- Use protective caps for the connectors when not mounted.
- Before mounting clean the connectors with dry compressed air.
- Before mounting clean the mating surfaces of the connector with a lint-free alcohol-drenched cloth on a wooden or non-metallic item.
- Attach and torque the connectors properly.
- Avoid metallic abrasion when mounting the connectors by only screwing the connecting nut, but not turning the whole connector.
- Use a torque wrench to fasten the connector, see above.
- Clean the protective caps before mounting for antenna cable replacement.

4.3.5. Cleaning Procedure for RF Cable Connectors

1. What is needed for the cleaning?
   a. Isopropyl alcohol
   b. Compressed air
   c. Lint-free wipe
   d. Cotton buds

2. Remove protective cap from the RF connector.

3. Remove metal chips and small particles from the mating and inner surfaces of the connector using compressed air.

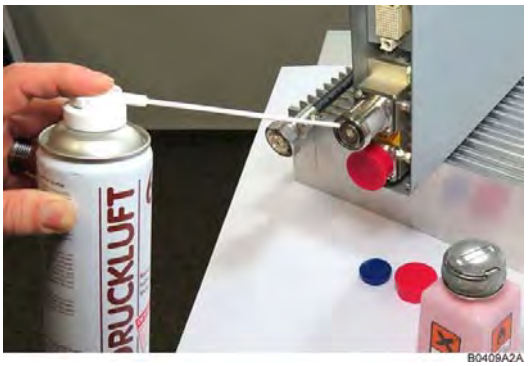

4. Clean the connector winding with lint-free wipe drenched with isopropyl alcohol.

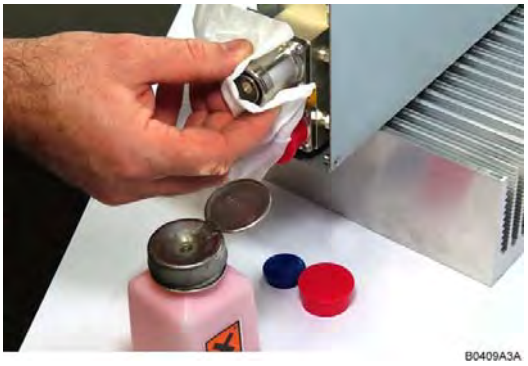

5. Clean the lip of the inner ring with lint-free wipe drenched with isopropyl alcohol.

6. Clean the inside surface of the inner ring with lint-free wipe drenched with isopropyl alcohol.

7. Clean the inside of the center conductor spring tines with a cotton bud drenched with isopropyl alcohol.

8. Clean in the similar way the connector of the connected cable. Remove protective caps from the unit connector first.

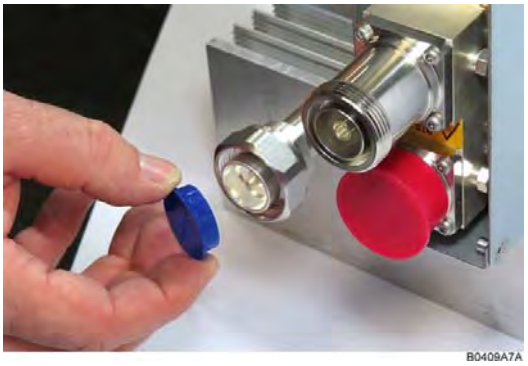

9. Remove metal chips and small particles from the mating and inner surfaces of the connector using compressed air.

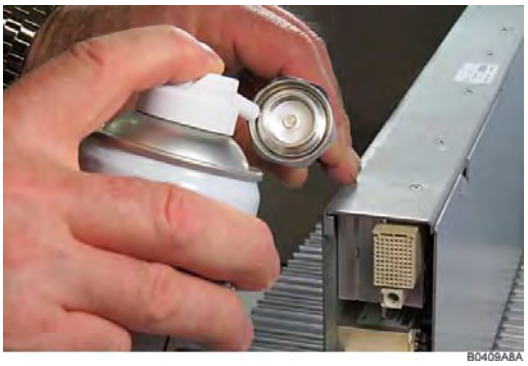

10. Continue with the winding area using lint-free wipe drenched with isopropyl alcohol.

11. Continue with the inside mating surface of the inner ring.

12. Clean the outside surface of the center pin.

4.3.6. Antenna Cable Connector Assembly

1. What is needed for the connector assembly?
    a. Torque wrench.
    b. (Adjustable) counter wrench

2. Join the connectors and turn the coupling nut until the thread grips.

3. Push in the connector until it clicks.

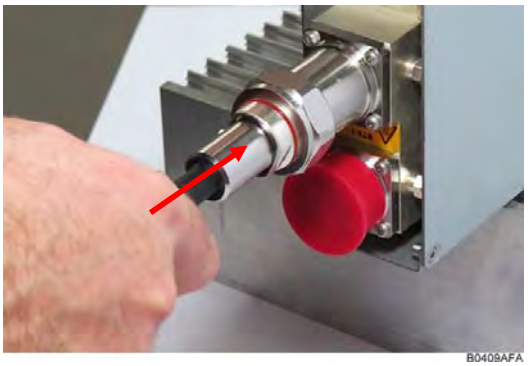

4. Fasten the coupling nut hand-tight. Do not turn the connector but the coupling nut only.

5. Retain the cable connector with the counter wrench and fasten the coupling nut with the torque wrench until the torque is applied (torque wrench clicks).

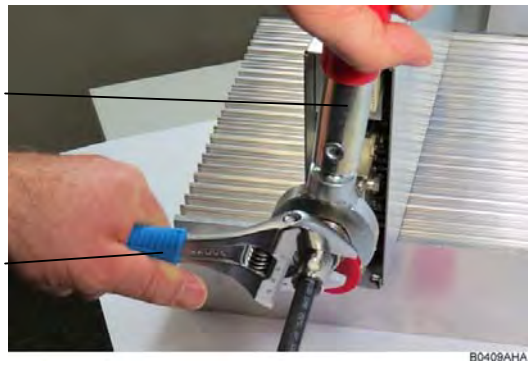

For angled antenna connectors use your hand to retain the cable connector and fasten the coupling nut with the torque wrench. Make sure only the coupling nut is turned, not the cable connector.

4.3.7. Correct Positioning of the Remote Unit and its Power Supply

- Under no circumstances should any component be affected by the heat created by any other one. The RU and its external power supply should be mounted so as to avoid reciprocal heating. Side-by-side configuration is suggested (see Figure 4-10 90/264 VAC power supply, case B and Figure 4-11 -48 VDC power supply, case B).
- RUs are provided with cooling fins which allow the optimization of heat dissipation. To ensure proper operation the mounting environment should allow for the necessary air flow.
- It is strongly recommended not to mount the external power supply on a horizontal surface because this position does not allow heat dissipation. External power supplies must be mounted on vertical surfaces.
- In order to assure proper heat dissipation, external power supplies must be mounted in a vertical position with the power socket downwards (examples for proper mounting to ensure proper heat dissipation are shown in Figure 4-10 90/264 VAC power supply, case B and Figure 4-11 -48 VDC power supply, case B).

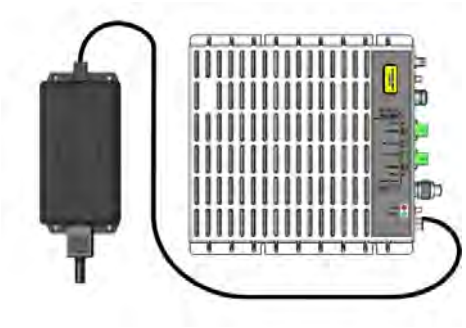

Figure 4-10 90/264 VAC power supply, case B

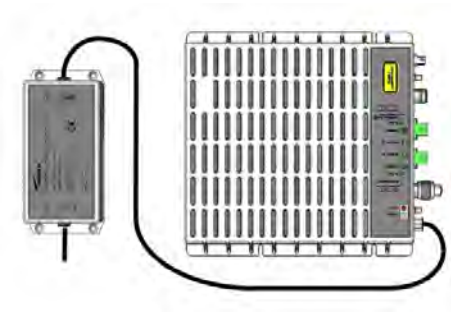

Figure 4-11 -48 VDC power supply, case B

Note that the RU and its power supply adapter are mounted side-by-side, and the power supply adapter has the socket downwards.

4.3.8. Power Supply

The TFAx RU are provided with different types of TPSN external power supplies, available either for universal mains (90 to 264 Vac) or for negative supply (-60 to -36 Vdc). TPSN external power supplies provide the RUs with either +5Vdc power (by means of a 3-pole connector, or with +28Vdc/+32Vdc power by means of a shielded circular connector. Different power ranges are available, see in table 4-1 Remote Unit Reference Table.

Figure 4-12 220 Vac/+5Vdc power adapter

Figure 4-13 -48 Vdc/+5Vdc power adapter

Figure 4-14 220 Vac/+28Vdc power adapter

4.3.9. Visual Alarms

Two control LEDs are provided on the TFAx front side. The green LED indicates the power supply status, while the red LED indicates any major Remote Unit failures (please refer to the respective troubleshooting section).

LED colour	Meaning
Red	Low optical power at DL input and/or RF amplifier failure
Green	Power supply OK

table 4-2 Status and Alarm LED Indication

4.3.10. Automatic Gain Control (AGC)

Each RU is provided with an AGC system, which is able to compensate optical losses when these are estimated to be <3 dB. In case optical losses are >3.5dB, the LMT application and the ION-B supervision unit will display a "Warning" alarm: the whole system still works, but AGC is near to its borderline levels. The red LED switches on when the estimated optical losses are >4.5 dB; the AGC is no longer able to compensate these losses. As shown in the previous table, the red LED switches on to indicate any major failures.

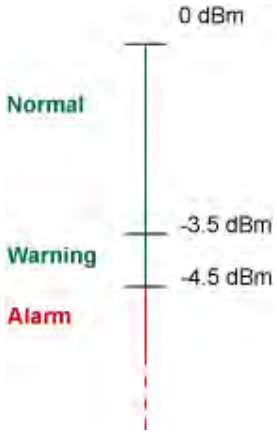

4.4. CASE A REMOTE UNIT

4.4.1. Specifications

Dimensions: 38 x 240 x 200 mm

(1.5 x 9.4 x 7.9 inches)

Weight: Please refer to the RU dedicated bulletin in order to discover any updated data regarding the weight of a specific Case A RU.

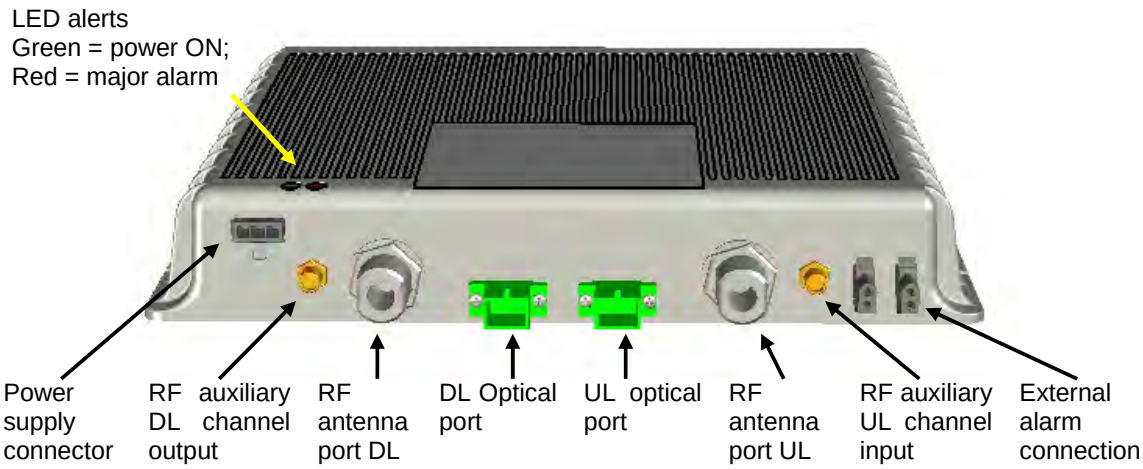

Figure 4-15 TFAx Case A RU

RF ports

- 2 RF antenna ports, transmitting/receiving signals to/from distributed antennas. RF antenna ports are duplexed N-female connectors. These RF ports can be connected to the antennas either directly (i.e. through RF jumper cables) or through splitters, thus allowing more antennas to be fed. Unused RF ports have to be terminated with a 50 Ω load.
- 1 RF auxiliary input and 1 RF auxiliary output (designed to receive and transmit additional signals). Auxiliary input and output ports are SMA-female connectors.

Optical ports

- 1 optical output port, transmitting UL signals to TFLN master optical TRX
- 1 optical input port, receiving DL signals from TFLN master optical TRX

Alarm Relay Inputs

The TFAx is provided with two alarm relay inputs which can be connected (through .062" MOLEX plugs) to any external device (i.e. an external booster). The alarm information regarding this external device can be signalled through the red LED of the TFAx LED panel and displayed on the Supervision System.

4.4.2. TFAx Case A Installation

The Case A Remote Unit can be mounted to walls or other flat surfaces, either directly or through a TKA04 installation kit (optional).

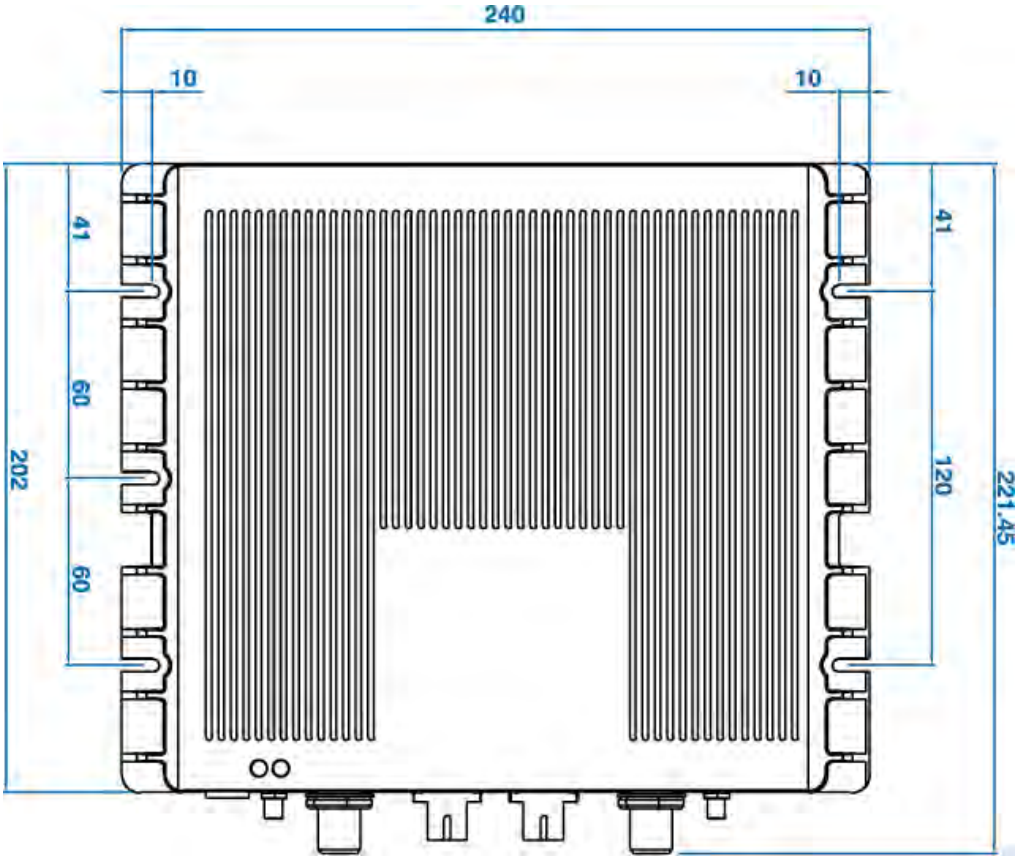

Figure 4-16 Case A layout with dimensions

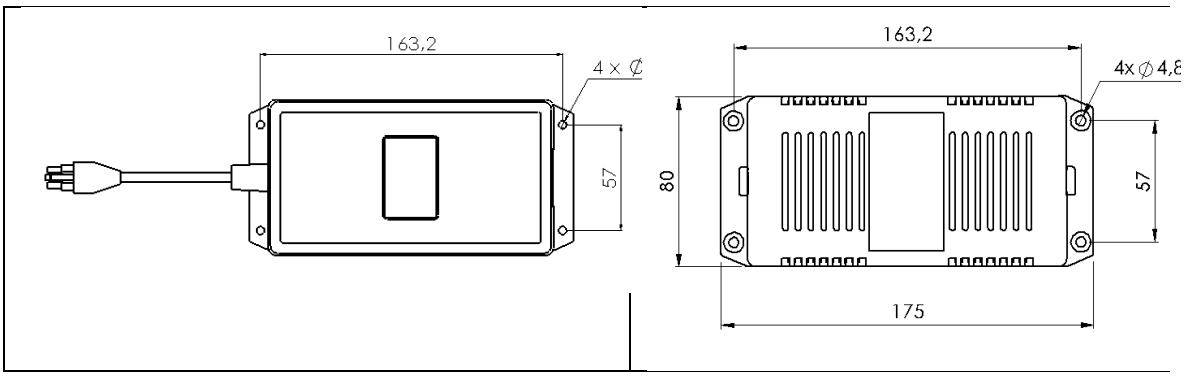

Figure 4-17 Layout of the power adapters with dimensions

4.4.3. Installing a Case A Remote Unit WITHOUT the TKA kit

The TFAx kit includes:

1. a RU TFAx
2. a TPSN external power supply adapter (if applicable)
3. a power supply plug

Once you have choosen a location for the RU, please follow these instructions:

1. In order to install the M4 dowels (not included) which hold up the TFAx Remote Unit, drill five holes into the wall according to the layout shown in Figure 4-16 Case A layout with dimensions.
2. Mount the TFAx to the wall by firmly fastening the screws.
3. In order to install the M4 dowels (not included) which hold up the power supply external adapter, drill four holes into the wall according to the layout of the power supply, shown in Figure 4-17 Layout of the power adapters with dimensions.
4. Mount the external power supply to the wall by fastening the screws.
5. Fasten the splice holder inside the splice tray (not included), see Figure 4-18 Inside view of the splice tray, with the splice holder positioned properly.
6. Splice the optical fibres and close the splice tray. While handling the fibres, be careful not to bend them.
7. Fasten the splice tray beside the RU.
8. Connect the external adapter to the TFAx RU with the proper cable.
9. If the RU is -48 Vdc powered, use the -48 Vdc plug (included) in order to connect the external adapter to the -48 Vdc supply. If the RU is 90/264 Vac-powered, mount the 90/264 Vac plug (included) onto a power cord (not included), and use this cable to connect the external adapter to mains.
10. Connect the antenna RF cables to the RF antenna ports. Connect the UL and DL optical connectors. If the power cable has properly been connected to the mains, both the green and the red LEDs should turn on. The green LED will remain lit to indicate that the unit is powered on, while the red LED will turn off as soon as the master optical TRX is switched on.
11. Once the installation is finished, please follow the Remote Unit Start-up section in order to carry out a proper system start up.

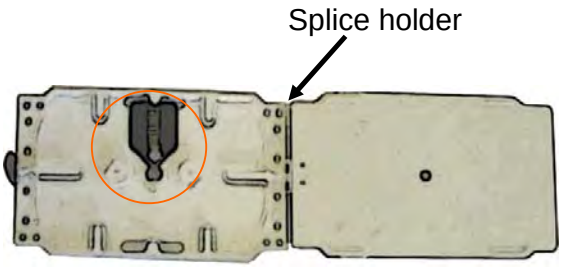

Figure 4-18 Inside view of the splice tray, with the splice holder positioned properly

Figure 4-19 Splice tray closed

4.4.4. Installation of the Case A Remote Unit WITH the TKA04 Installation Kit

The TFAx Case A kit includes:

1. a RU TFAx
2. a TPSN external power supply adapter (if applicable)
3. a power supply plug

The TKA04 kit includes:

A. four dowels (for fastening the wall bearing to the wall)

B. five dowels (for fastening the TFAx Case A to the wall bearing)

C. a wall mounting box (wall bearing & cover)

D. a splice holder

1. Unscrew the 4 screws which lock the lower cover of the TKA04 wall bearing.

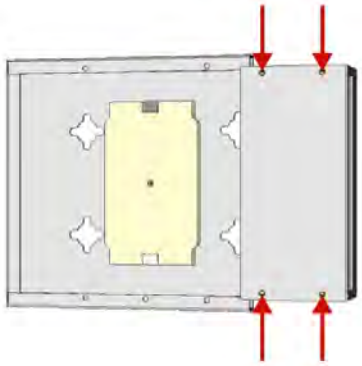

Figure 4-20 Dismount TKA cover

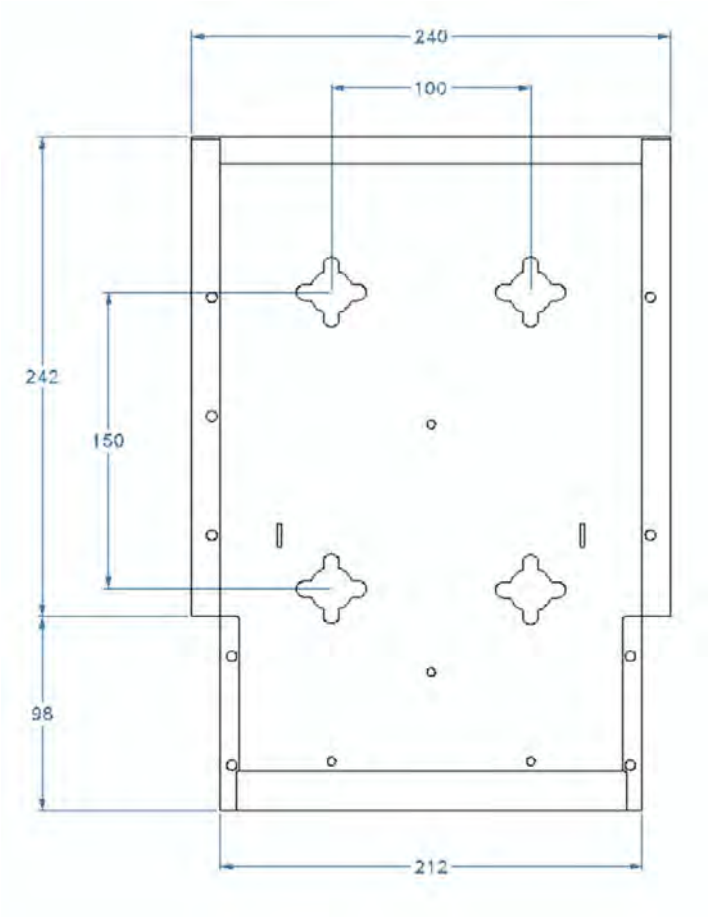

Figure 4-21 Layout of the TKA installation kit for TFAx Remote Unit, Case A

2. In order to install the M4 dowels (included) for the TKA04 wall bearing, drill four holes into the wall.

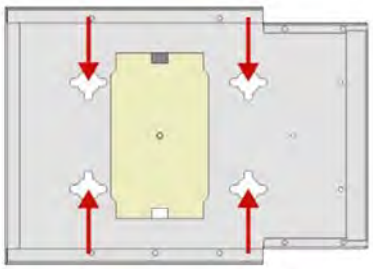

Figure 4-22 Installation: drill four holes

3. Mount the TKA04 wall bearing by firmly fastening the screws.
4. In order to install the M4 dowels (not included) for the power supply external adapter, drill four holes into the wall according to Figure 4-17 Layout of the power adapters with dimensions.

5. Mount the external power supply adapter to the wall by firmly fastening the screws.

6. Carefully open the splice tray by using a screwdriver. Fasten the splice holder inside the splice tray. Splice the optical fibers and close the splice tray. While handling the fibers, take care not to bend them. Close the splice tray.

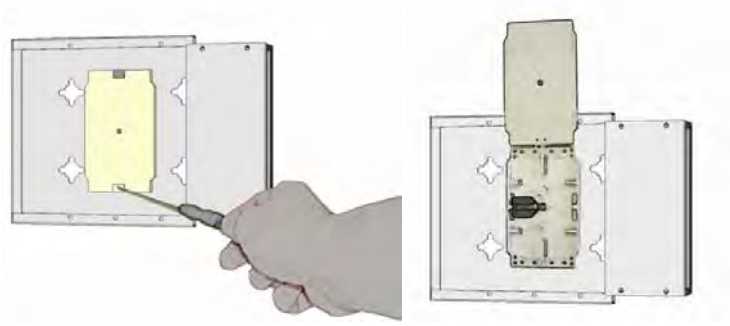

Figure 4-23 Splice tray

7. Mount the Remote Unit to the wall-bearing by using the included screws.

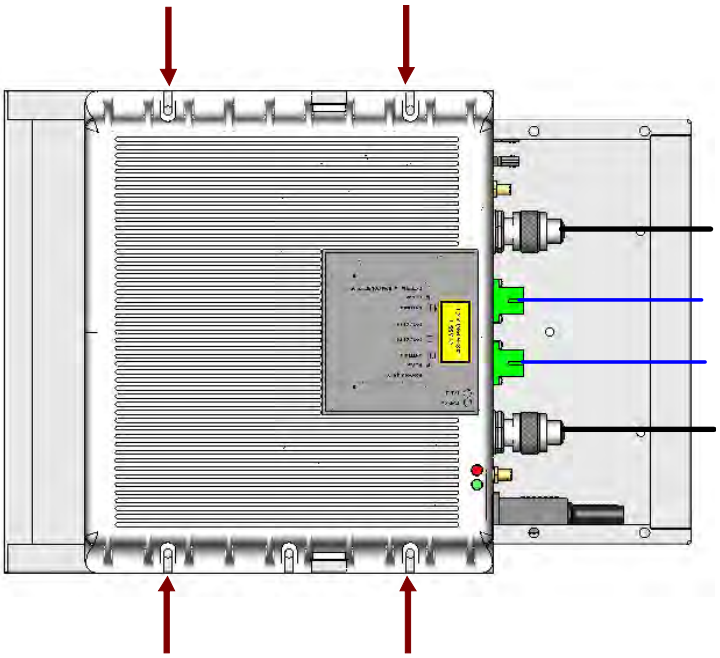

Figure 4-24 Mount the Remote Unit

8. If the Remote Unit is -48 Vdc powered, use the -48 Vdc plug (included) in order to connect the external adapter to the -48 Vdc mains. If the Remote Unit is 90/264 Vac-powered, mount the 90/264 Vac plug (included) onto a power cord (not included), and use this cable in order to connect the external adapter to the mains.

9. Connect the antenna RF cables to the RF antenna ports. Connect the UL and DL optical connectors. If the power cable has properly been connected to the mains, both the green and the red LEDs should turn on. The green LED will remain lit to indicate that the unit is powered on, while the red LED will turn off as soon as the local unit is switched on (for further details about the start up of the system, please refer to the Remote Unit Start-up section).

10. Mount the lower cover by fastening the four screws.

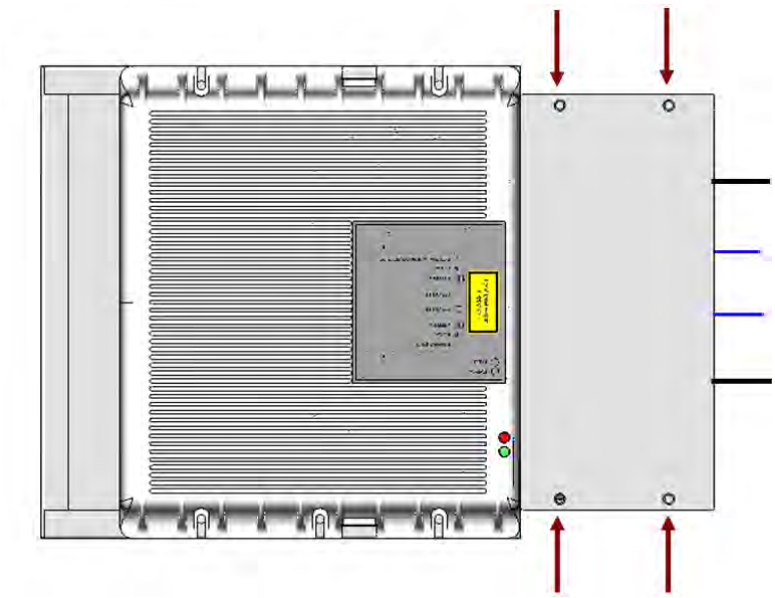

Figure 4-25 Mount TKA cover

Please note that the figures do not show the mounting of the external power supply adapter.

4.5. CASE B REMOTE UNIT

4.5.1. Specifications

Dimensions: 38 x 240 x 240 mm

(1.5 x 9.4 x 9.4 inches)

Weight: Please refer to the RU dedicated bulletin in order get updated data regarding the weight of a specific Case B RU

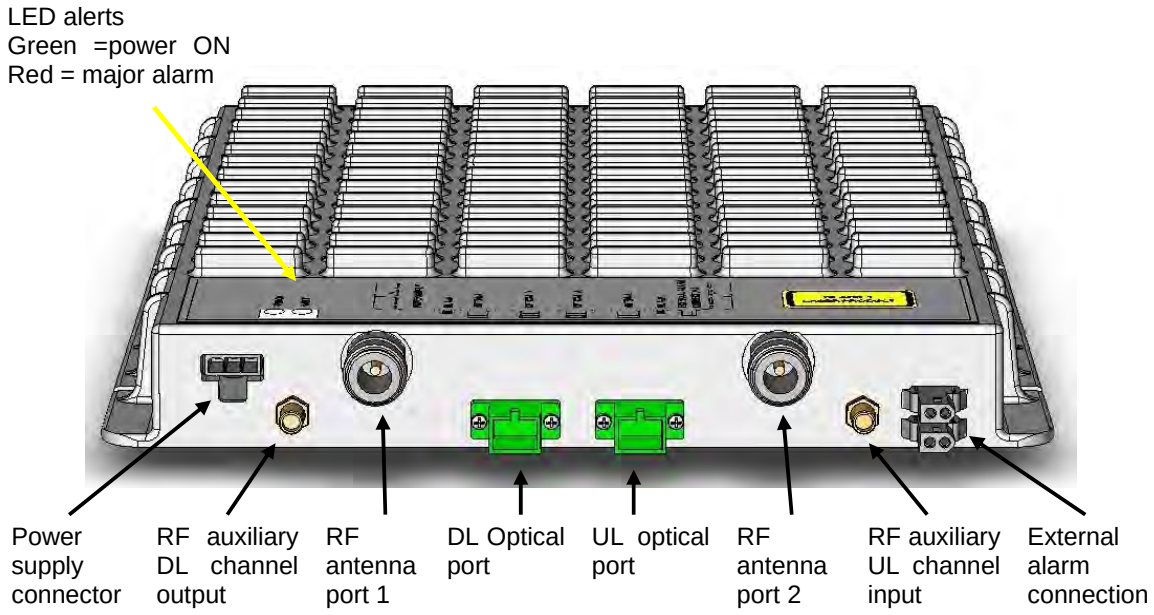

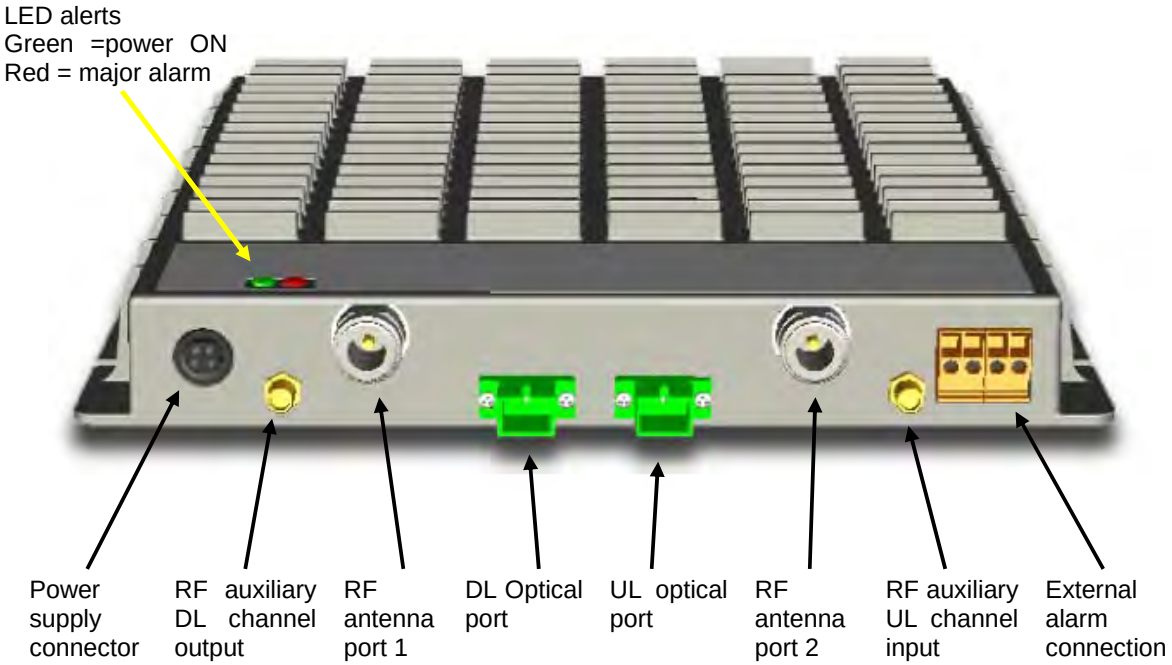

Figure 4-26 TFAx Case B RU (above) and TFAx Case B RU, Power version (below)

RF ports

- 2 RF antenna ports, transmitting/receiving signals to/from distributed antennas. RF antenna ports are duplexed N-female connectors. These RF ports can be connected to the antennas either directly (i.e. through RF jumper cables) or through splitters, thus allowing more antennas to be fed. Unused RF ports have to be terminated with a 50 Ω load.
- 1 RF auxiliary input and 1 RF auxiliary output (designed to receive and transmit additional signals). Auxiliary input and output ports are SMA-female connectors.

Optical ports

- 1 optical output port, transmitting UL signals to TFLN master optical TRX
- 1 optical input port, receiving DL signals from TFLN master optical TRX.

Alarm Relay Inputs

The TFAx is provided with two alarm relay inputs which can be connected (through .062" MOLEX plugs or terminals according to the different versions) to any external device (i.e an external booster). The alarm information regarding this external device is able to be signalled through the red LED of the TFAx LED panel and displayed on the Supervision System.

4.5.2. TFAx Case B Installation

The Case B RU can be mounted to walls or other flat vertical surfaces, either directly or through a TKA04 installation kit (optional).

4.5.3. Installing a Case B Remote Unit WITHOUT the TKA Kit

The TFAx kit includes:

1. a RU TFAx
2. a TPSN external power supply adapter
3. a power supply plug

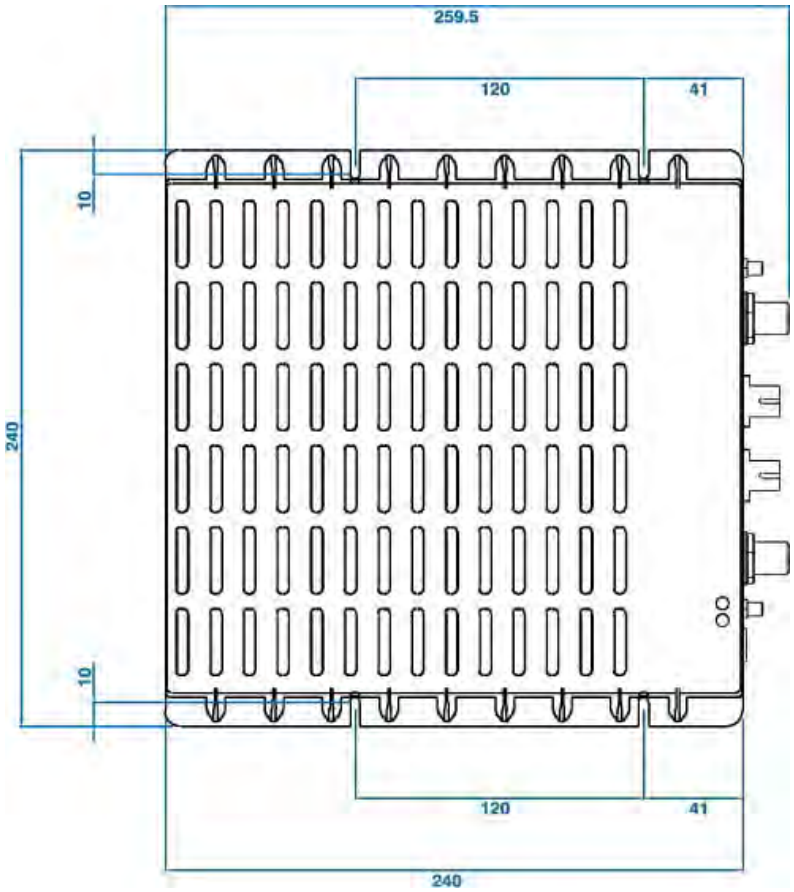

Figure 4-27 Case B layout with dimensions

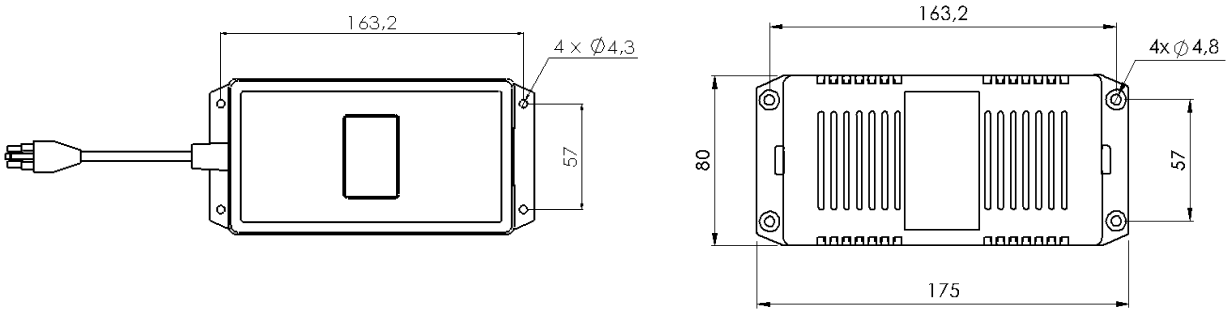

Figure 4-28 Layout of the +5Vdc power adapter with dimensions

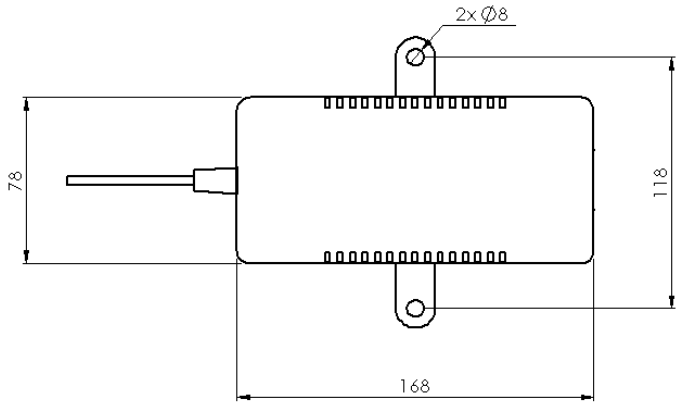

Figure 4-29 Layout of the +28Vdc power adapter with dimensions

Once you have chosen a location for the RU, please follow these instructions:

1. In order to install the M4 dowels (not included) which hold up the TFAx RU, drill five holes into the wall according the layout shown Figure 4-27 Case B layout with dimensions.
2. Mount the TFAx to the wall by firmly fastening the screws into the dowels.
3. In order to install the M4 screw dowels (not included) which hold up the power supply external adapter, drill four holes into the wall according the layout shown in Figure 4-28 Layout of the +5Vdc power adapter with dimensions or Figure 4-29 Layout of the +28Vdc power adapter with dimensions.
4. Mount the external power supply adapter to the wall by firmly fastening the screws.
5. Mount the splice holder inside the splice tray (not included).
6. Splice the optical fibres and close the splice tray. While handling the fibres, be careful not to bend them.
7. Mount the splice tray beside the RU.
8. Connect the external adapter to the TFAx RU with the proper cable.
9. If the RU is -48 Vdc powered, use the -48 Vdc plug (included) in order to connect the external adapter to the -48 Vdc supply. If the RU is 90/264 Vac-powered, mount the 90/264 Vac plug (included) onto a power cord (not included), and use this cable to connect the external adapter to mains.

10. Connect the antenna RF cables to the RF antenna ports. Connect the UL and DL optical connectors. If the power cable has properly been connected to the mains, both the green and the red LEDs should turn on. The green LED will remain lit to indicate that the unit is powered on, while the red LED will turn off as soon as the local unit is switched on.
11. Once the installation is finished, please follow the Remote Unit Start-up section in order to carry out a proper system start up.

4.5.4. Installation of the Case B Remote Unit WITH the TKA04 Installation Kit

The TFAx Case B kit includes:

1. a RU TFAx
2. a TPSN external power supply adapter
3. a power supply plug

The TKA04 kit includes:

A. four screw dowels (mounting the wall bearing to the wall)
B. five screw dowels (mounting the TFAx Case B to the wall bearing)
C. a wall mounting box (wall bearing + cover)
D. a splice holder

Once you have chosen the position of the RU mounting case, please follow these instructions:

1. Unscrew the four screws which lock the lower cover of the TKA04 wall bearing.

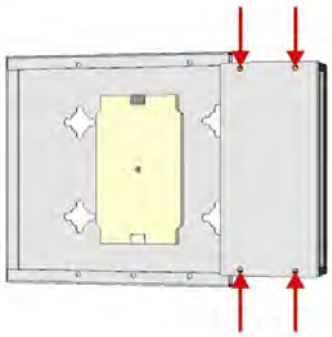

Figure 4-30 Dismount TKA cover

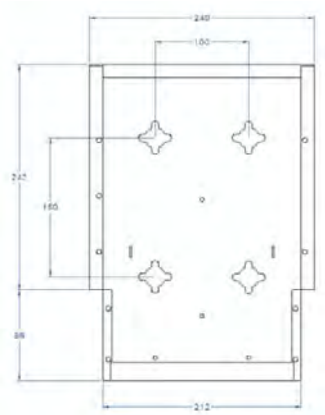

Figure 4-31 Layout of the TKA installation kit for TFAx Remote Unit, Case B

2. In order to install the M4 dowels (included) for the TKA04 wall bearing, drill four holes into the wall.

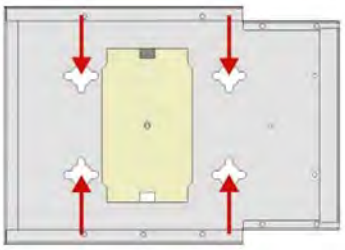

Figure 4-32 Installation: drill four holes

3. Mount the TKA04 wall bearing by firmly fastening the screws.

4. In order to install the M4 dowels (not included) which hold up the power supply external adapter, drill four (two) holes into the wall according to the power supply layout shown in Figure 4-28 Layout of the +5Vdc power adapter with dimensions or Figure 4-29 Layout of the +28Vdc power adapter with dimensions

5. Mount the external power supply adapter to the wall by firmly fastening the screws.

6. Carefully open the splice tray by using a screwdriver. Fasten the splice holder inside the splice tray. Splice the optical fibres and close the splice tray. While handling the fibres, take care not to bend them. Close the splice tray.

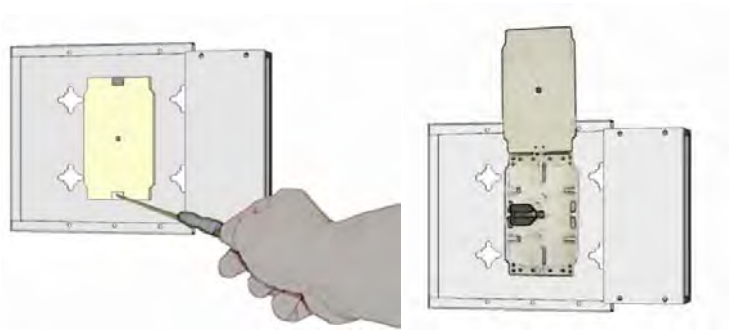

Figure 4-33 Splice tray

7. Mount the RU to the wall-bearing by using the included screws.

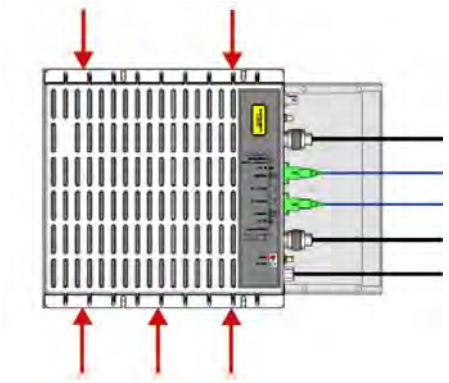

Figure 4-34 Mount the Remote Unit

8. If the RU is -48 Vdc powered, use the -48 Vdc plug (included) in order to connect the external adapter to the -48 Vdc mains. If the RU is 90/264 Vac-powered, mount the 90/264 Vac plug (included) onto a power cord (not included), and use this cable in order to connect the external adapter to the mains.

9. Connect the antenna RF cables to the RF antenna ports. Connect the UL and DL optical connectors. If the power cable has properly been connected to the mains, both the green and the red LEDs should turn on. The green LED will remain lit to indicate that the unit is powered on, while the red LED will turn off as soon as the local unit is switched on (for further details about the start up of the system, please refer to the Remote Unit Start-up section).

10. Mount the lower cover by fastening the 4 screws.

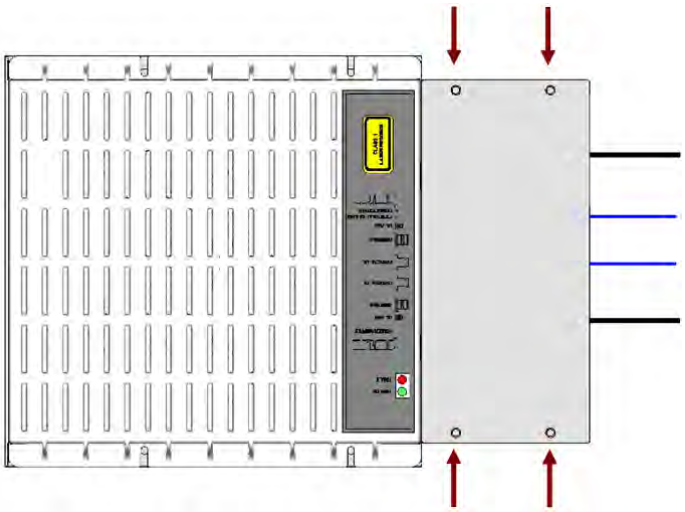

Figure 4-35 Mount TKA cover

4.6. CASE R2 REMOTE UNIT

4.6.1. Specifications

Dimensions: mm 330 x 250 x 122.5

(inches 13 x 9.8 x 4.8)

Weight: Please refer to the Remote Unit dedicated bulletin in order to know the updated data about the weight of a specific Case R2 RU.

Figure 4-36 Case R2 Remote Unit

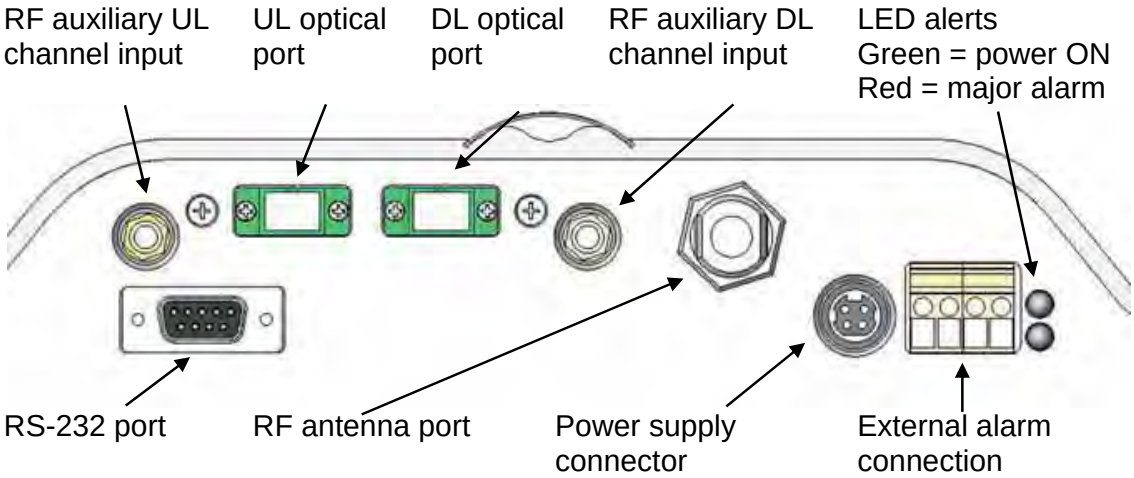

Figure 4-37 Case R2 front view

RF ports

- 1 RF antenna port, transmitting/receiving signals to/from distributed antennas. This RF antenna port is a duplexed N-female connector. The port can be connected to the antenna either directly (i.e. through RF jumper cables) or through splitters, thus allowing more antennas to be fed.
- 1 RF auxiliary input and 1 RF auxiliary output (designed to receive and transmit additional signals). Auxiliary input and output ports are SMA-female connectors.

Optical ports

- 1 optical output port, transmitting UL signals to TFLN master optical TRX;
- 1 optical input port, receiving DL signals from TFLN master optical TRX.

External alarms inputs

A Case R2E TFAx is provided with two alarm contact inputs which can be cabled to collect the alarms from any external device (i.e. an external booster). The alarm information regarding this external device are then signalled through the TFAH front panel red LED and displayed on the Supervision System.

4.6.2. TFAx Case R2 Installation

Each Case R2 Remote Unit kit includes:

1. a RU TFAx
2. a TPSN external power supply adapter
3. a power supply plug

The Case R2 Remote Unit has to be mounted with heat-dissipation fins in vertical position. The suggested installation layout is shown in Figure 4-38 Case R2 RU, mounted with power supply, with the external power supply mounted side by side to the Remote Unit, using a common screw anchor to support both the Remote Unit's right side and the power supply's left wing.

An external splice box (not included) may be mounted side by side to the power supply or to the Remote Unit, sharing an anchor with one of them.

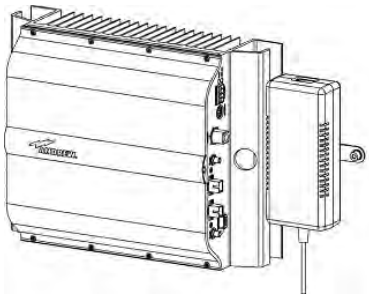

Figure 4-38 Case R2 RU, mounted with power supply

Once you have chosen the position of the RU mounting case, please follow these instructions:

1. Drill four holes to the wall and install the four M6 dowels (not included). Alternatively, you can choose to install your power supply close to the RU.

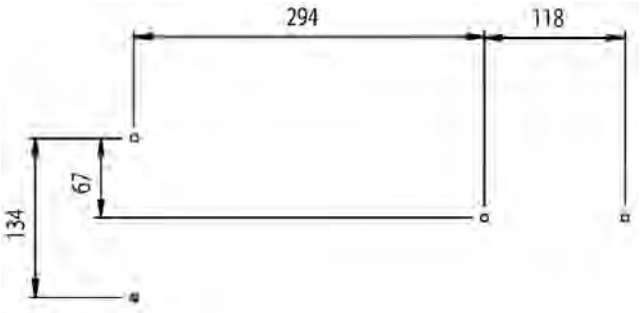

Figure 4-39 Installation: drill four holes

2. Insert the four M6 dowels in the holes, and fasten the power supply to the wall. If you planned to use a common screw anchor to support both the RU and the external power supply, take care not to fasten the screw to this hole until you fastened the RU.

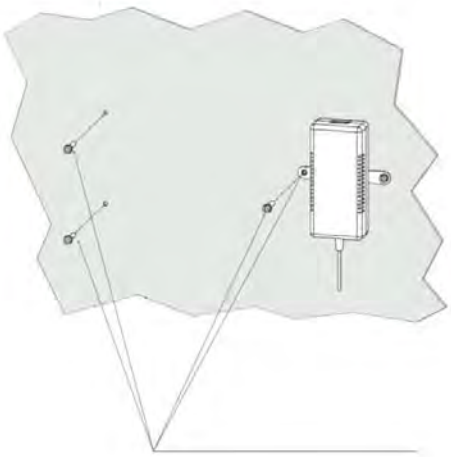

Figure 4-40 Mount the PSU

3. Fasten the Remote Unit to the wall.

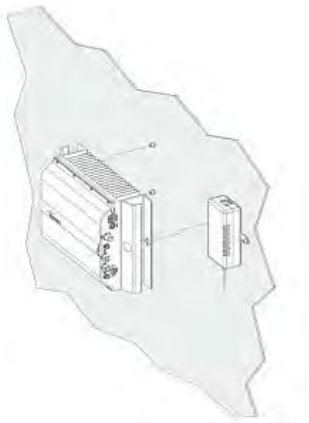

Figure 4-41 Mount the RU

4. Fasten the splice holder (not included) inside a splice tray (not included). Make the optical splices and close the splice tray. Place the splice tray inside a splice box (not included), and mount the splice box beside the Remote Unit. The suggested installation position is side by side to the power supply or to the Remote Unit, using one of their M6 dowels already installed to support the splice box as well.

Note: Take care not to bend the fibres too much.

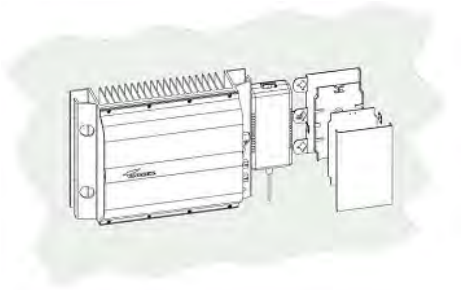

Figure 4-42 Mount the splice tray

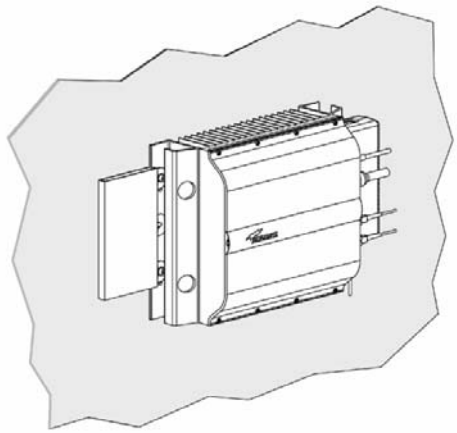

Figure 4-43 Mount the splice box

5. Now connect the RF cables, the optical connectors, and the power supply connector to the Remote Unit. Take care to connect UL and DL fibres properly.
   After the Remote Unit has been properly cabled, insert the power plug in the external power supply adapter, so as to connect it to the mains.

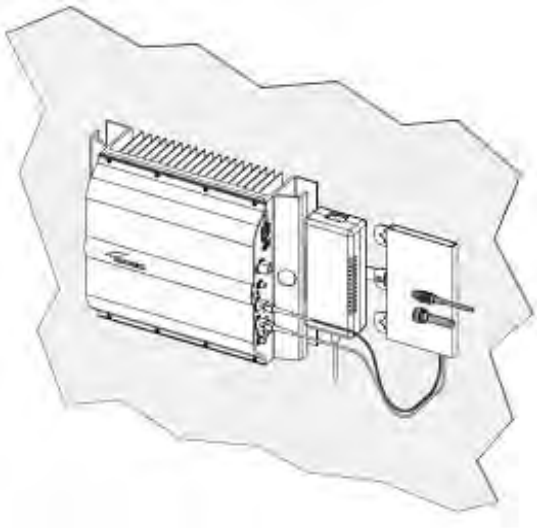

Figure 4-44 Mount the connectors

4.7. CASE R2 MIMO REMOTE UNIT

4.7.1. Specifications

Dimensions: mm 330 x 250 x 122.5

(inches 13 x 9.8 x 4.8)

Weight: Please refer to the Remote Unit dedicated bulletin in order to know the updated data about the weight of a specific Case R2 RU.

Figure 4-45 Case R2 MIMO Remote Unit

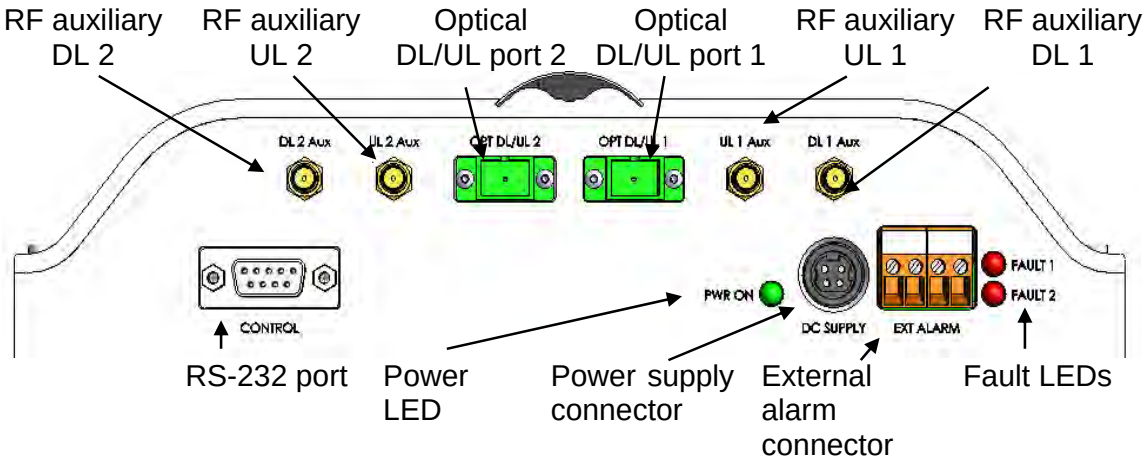

Figure 4-46 Case R2 MIMO front view

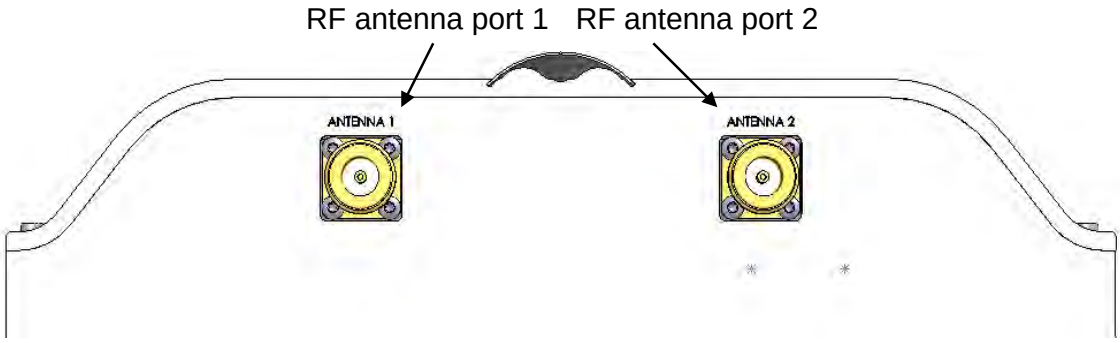

Figure 4-47 Case R2 MIMO rear view

RF ports

- 2 RF antenna ports, transmitting/receiving signals to/from distributed antennas. These RF antenna ports are duplexed N-female connectors. The ports can be connected to the antenna either directly (i.e. through RF jumper cables) or through splitters, thus allowing more antennas to be fed.
- 2 RF auxiliary inputs and 2 RF auxiliary outputs (designed to receive and transmit additional signals). Auxiliary input and output ports are SMA-female connectors.

Optical ports

- 2 optical input/output ports, transmitting UL and DL signals to the Master Units optical transceiver TFLN2604W/4.

Note: The optical link from the Case R2 MIMO Remote Unit to the Master Unit can only be done with TFLN2604W/4.

External alarms inputs

A Case R2 TFAx is provided with two alarm contact inputs which can be cabled to collect the alarms from any external device (i.e. an external booster). The alarm information regarding this external device are then signalled through the TFAH front panel red LEDs and displayed on the Supervision System.

LEDs

- The Power LED signals the status of the Case R2 MIMO TFAx; Off – No power applied, Green – power is applied, Red – Major failure
- The Fault LEDs indicate the status of the devices monitored via the external alarms connectors. Red – Failure.

4.7.2. TFAx Case R2 MIMO Installation

Each Case R2 MIMO Remote Unit kit includes:

1. a RU TFAx
2. a TPSN external power supply adapter
3. a power supply plug

The Case R2 MIMO Remote Unit has to be mounted with heat-dissipation fins in vertical position. The suggested installation layout is shown in Figure 4-38 Case R2 RU, mounted with power supply, with the external power supply mounted side by side to the Remote Unit, using a common screw anchor to support both the Remote Unit's right side and the power supply's left wing.

An external splice box (not included) may be mounted side by side to the power supply or to the Remote Unit, sharing an anchor with one of them.

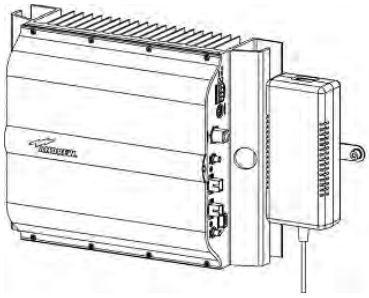

Figure 4-48 Case R2 RU, mounted with power supply

Once you have chosen the position of the RU mounting case, please follow these instructions:

1. Drill four holes to the wall and install the four M6 dowels (not included). Alternatively, you can choose to install your power supply close to the RU.

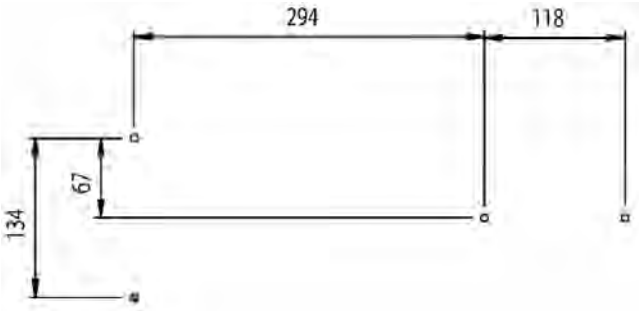

Figure 4-49 Installation: drill four holes

2. Insert the four M6 dowels in the holes, and fasten the power supply to the wall. If you planned to use a common screw anchor to support both the RU and the external power supply, take care not to fasten the screw to this hole until you fastened the RU.

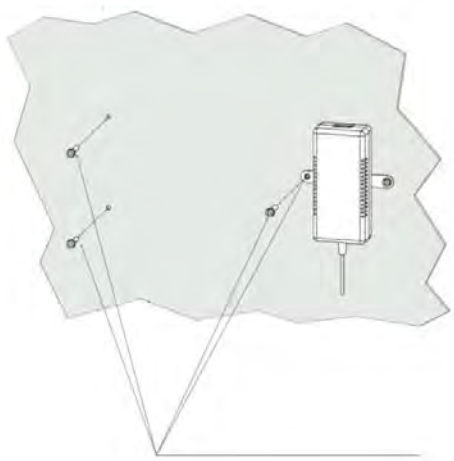

Figure 4-50 Mount the PSU

3. Fasten the Remote Unit to the wall.

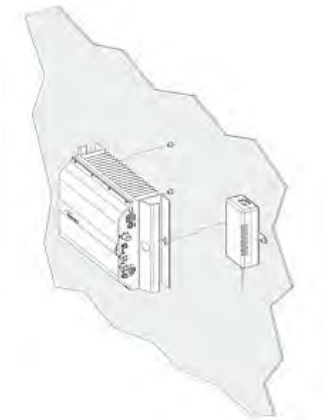

Figure 4-51 Mount the RU

4. Fasten the splice holder (not included) inside a splice tray (not included). Make the optical splices and close the splice tray. Place the splice tray inside a splice box (not included), and mount the splice box beside the Remote Unit. The suggested installation position is side by side to the power supply or to the

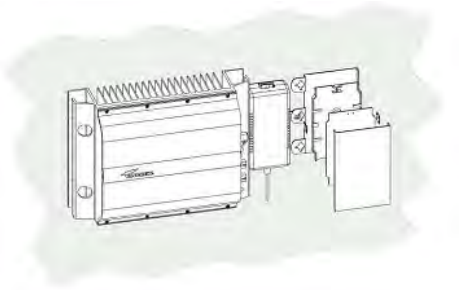

Figure 4-52 Mount the splice tray

Remote Unit, using one of their M6 dowels already installed to support the splice box as well.

Note: Take care not to bend the fibres too much.

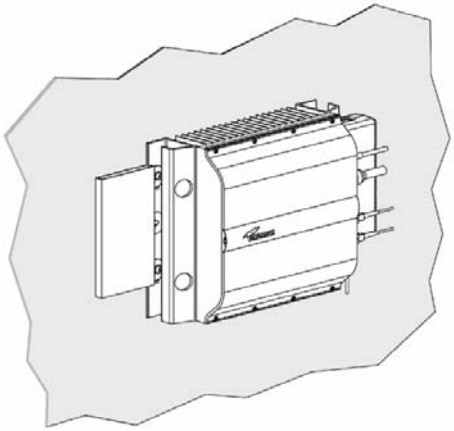

Figure 4-53 Mount the splice box

5. Now connect the RF cables, the optical connectors, and the power supply connector to the Remote Unit. Take care to connect UL and DL fibres properly.
   After the Remote Unit has been properly cabled, insert the power plug in the external power supply adapter, so as to connect it to the mains.

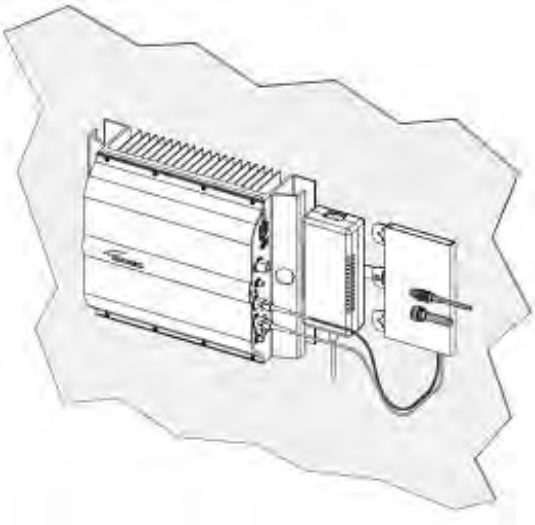

Figure 4-54 Mount the connectors

4.8. CASE R2E REMOTE UNIT

4.8.1. Specifications

Dimensions: mm 513 x 250 x 125

(inches 19.3 x 9.9 x 4.9)

Weight: Please refer to the Remote Unit dedicated bulletin in order to know the updated data about the weight of your Case R2E Remote Unit.

Figure 4-55 Case R2E Remote Unit

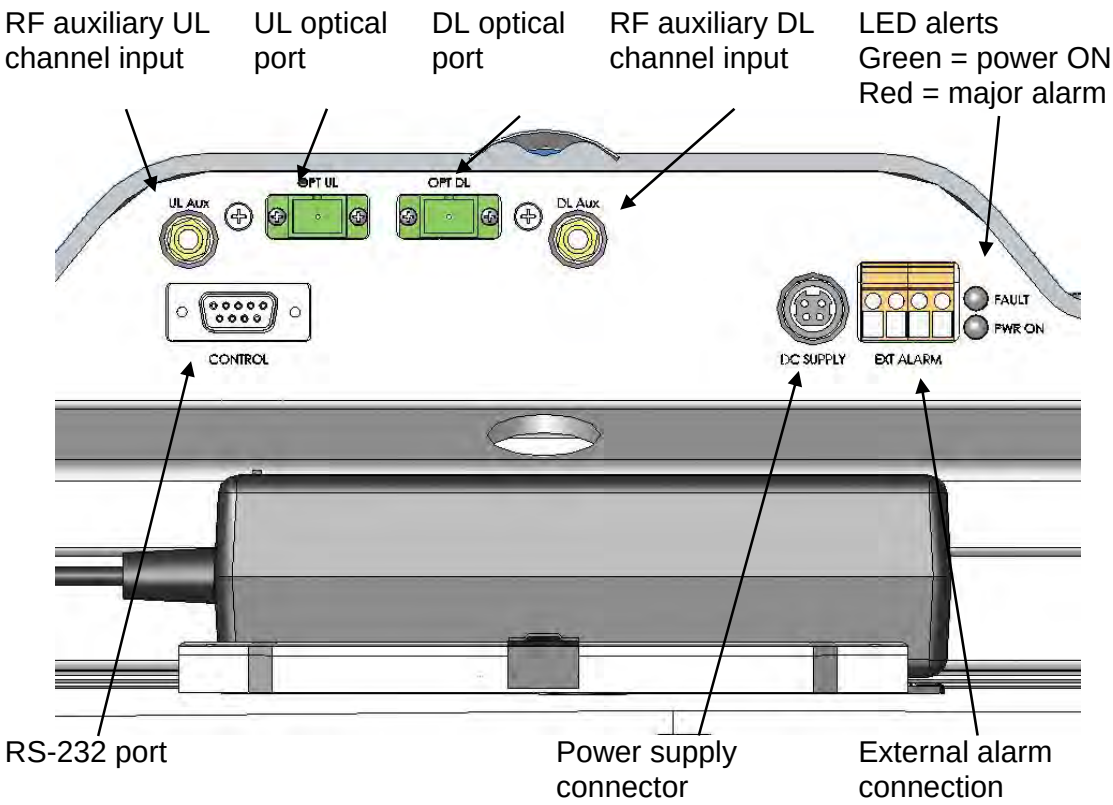

Figure 4-56 Case R2E front view

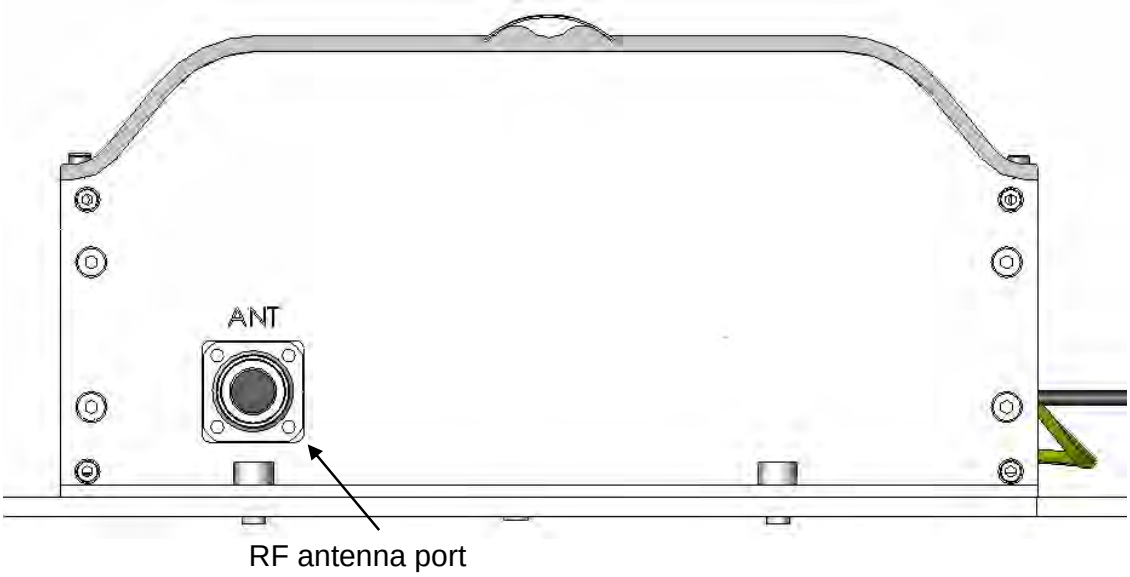

Figure 4-57 Case R2E rear view

RF ports

- 1 RF antenna port, transmitting/receiving signals to/from distributed antennas. This RF antenna port is a duplexed N-female connector. The port can be connected to the antenna either directly (i.e. through RF jumper cables) or through splitters, thus allowing more antennas to be fed.
- 1 RF auxiliary input and 1 RF auxiliary output (designed to receive and transmit additional signals). Auxiliary input and output ports are SMA-female connectors.

Optical ports

- 1 optical output port, transmitting UL signals to TFLN master optical TRX;
- 1 optical input port, receiving DL signals from TFLN master optical TRX.

External alarms inputs

A Case R2E TFAx is provided with two alarm contact inputs which can be cabled to collect the alarms from any external device (i.e. an external booster). The alarm information regarding this external device are then signalled through the TFAH front panel red LED and displayed on the Supervision System.

4.8.2. TFAx Case R2E Installation

Each Case R2E Remote Unit kit includes:

1. a RU TFAx
2. a TPSN external power supply adapter
3. a power supply plug

The Case R2E Remote Unit has to be mounted with heat-dissipation fins in vertical position. The suggested installation layout is shown in Figure 4-58 Case R2E Remote Unit, mounted with power supply, with the external power supply mounted side by side to the Remote Unit, using a common screw anchor to support both the Remote Unit's right side and the power supply's left wing.

An external splice box (not included) may be mounted side by side to the power supply or to the Remote Unit, sharing an anchor with one of them.

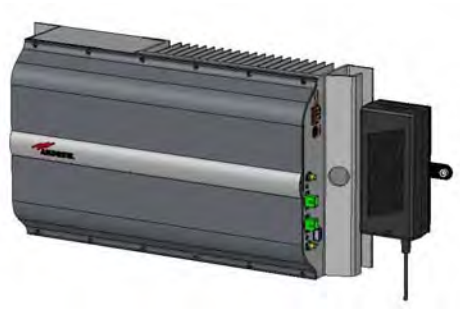

Figure 4-58 Case R2E Remote Unit, mounted with power supply

1. Drill four holes to the wall and install the four M6 dowels (not included). Alternatively, you can choose to install your power supply close to the RU.

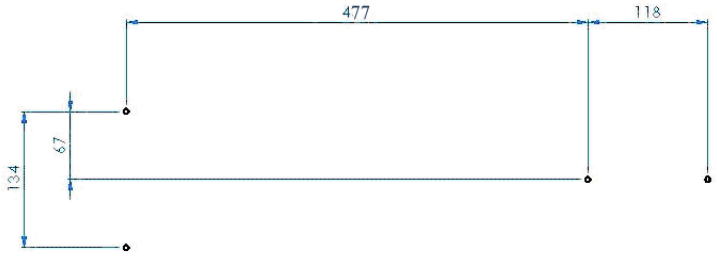

Figure 4-59 Drilling layout

2. Insert the four M6 dowels into the holes and fasten the power supply to the wall.
   If you planned to use a common screw anchor to support both the Remote Unit and the external power supply, take care not to screw this dowels till you fastened the Remote Unit.

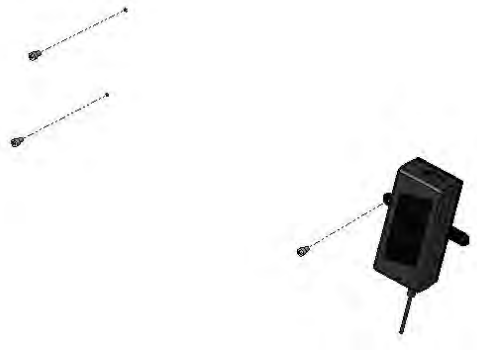

Figure 4-60 Fastening the power supply

3. Fasten the Remote Unit to the wall and tighten the 4 dowels.

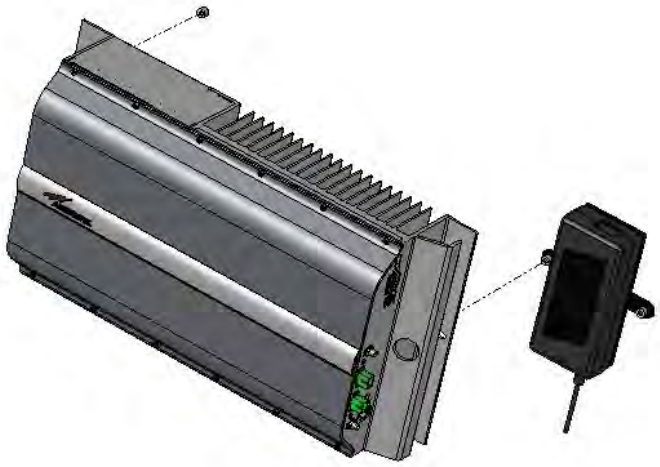

Figure 4-61 Fastening the RU

4. Fasten the splice holder (not included) inside a splice tray (not included), make the optical splices and close the splice tray. Mount the splice box beside the Remote Unit. Suggested installation position is side by side to the power supply using one of their M6 dowels already deployed for the power supply.

Note: Take care not to bend the fibres too much.

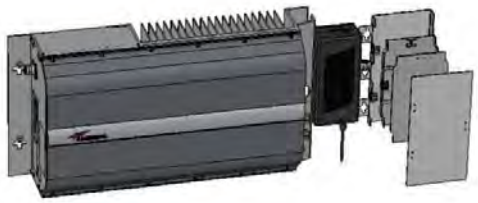

Figure 4-62 Fastening the splice box

5. Now connect the RF cables, the optical connectors, and the power supply connectors to the Remote Unit. Take care to connect UL and DL fibres properly. Use the fibre protection (provided with the splice box) to protect the fibres.
   When the Remote Unit has been properly cabled, insert the power plug in the external power supply adapter, so as to connect it to mains.

4.9. CASE R4E REMOTE UNIT

4.9.1. Specifications

Dimensions: mm 515 x 335 x 125

(inches 20.3 x 13.2 x 4.9)

Weight: Please refer to the Remote Unit dedicated bulletin in order to know the updated data about the weight of your Case R4E Remote Unit.

Figure 4-63 Case R4E Remote Unit

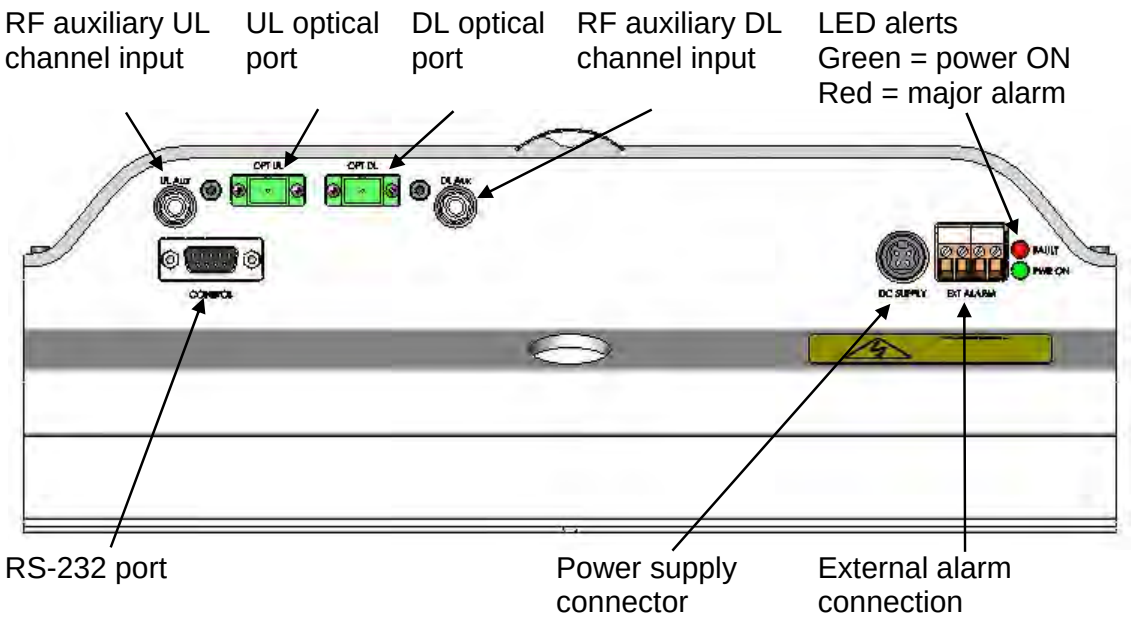

Figure 4-64 Case R4E front view

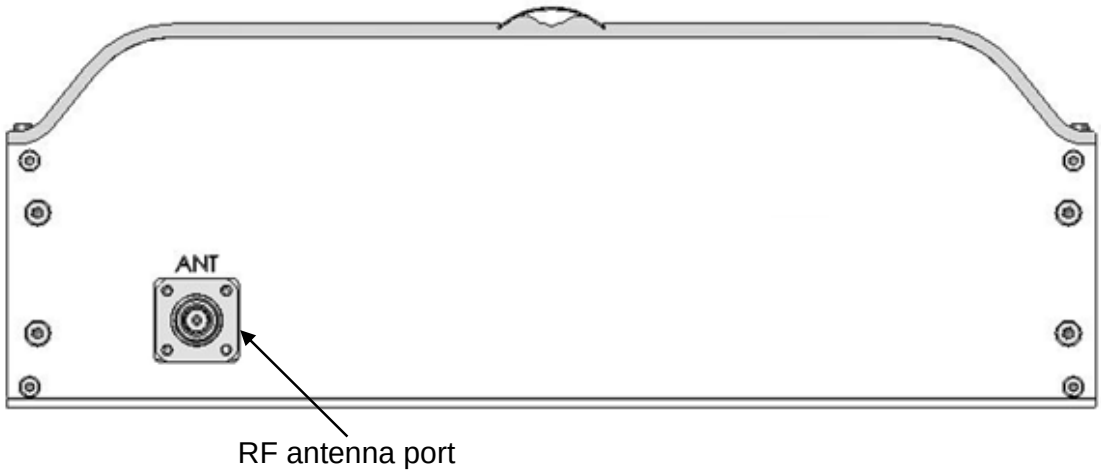

Figure 4-65 Case R4E rear view

RF ports

- 1 RF antenna port, transmitting/receiving signals to/from distributed antennas. This RF antenna port is a duplexed N-female connector. The port can be connected to the antenna either directly (i.e. through RF jumper cables) or through splitters, thus allowing more antennas to be fed.
- 1 RF auxiliary input and 1 RF auxiliary output (designed to receive and transmit additional signals). Auxiliary input and output ports are SMA-female connectors.

Optical ports

- 1 optical output port, transmitting UL signals to TFLN master optical TRX;
- 1 optical input port, receiving DL signals from TFLN master optical TRX.

External alarms inputs

A Case R4E TFAx is provided with two alarm contact inputs which can be cabled to collect the alarms from any external device (i.e. an external booster). The alarm information regarding this external device are then signalled through the TFAH front panel red LED and displayed on the Supervision System.

4.9.2. TFAx Case R4E Installation

Each Case R4E Remote Unit kit includes:

1. a RU TFAx
2. a TPSN external power supply adapter
3. a power supply plug

The Case R4E Remote Unit has to be mounted with heat-dissipation fins in vertical position. The suggested installation layout is shown in Figure 4-66 Case R4E Remote Unit, mounted with power supply, with the external power supply mounted close to the Remote Unit. An external splice box (not included) may be mounted side by side to the power supply or to the Remote Unit, sharing an anchor with one of them.

DC version AC version

Figure 4-66 Case R4E Remote Unit, mounted with power supply

1. Drill four holes to the wall and install the four M6 dowels (not included) to fix the Remote Unit.
   For DC versions PSU can be installed re-using one of the RU fixing holes (and M6 dowels, not provided). For AC version the PSU can be installed close to the RU, drilling two holes to the wall and installing two M4 dowels (not provided) to fix it.

2. Insert the four M6/M4 dowels into the holes and fasten the power supply to the wall. Fasten the Remote Unit to the wall and tighten the 4 dowels.

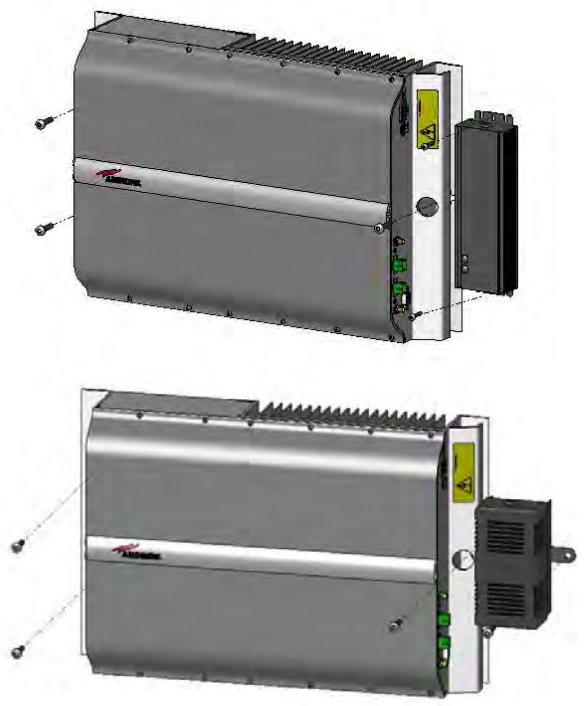

Figure 4-67 Fastening the power supply and RU

3. Fasten the splice holder (not included) inside a splice tray (not included), make the optical splices and close the splice tray. Mount the splice box beside the Remote Unit.

Note: Take care not to bend the fibres too much.

4. Now connect the RF cables, the optical connectors, and the power supply connectors to the Remote Unit. Take care to connect UL and DL fibres properly. Use the fibre protection (provided with the splice box) to protect the fibres. When the Remote Unit has been properly cabled, insert the power plug in the external power supply adapter, so as to connect it to mains.

4.10. CASE U REMOTE UNIT

4.10.1. Specifications

Dimensions: mm 514 x 480 x 205

(inches 20.3 x 18.9 x 8.1)

Weight: Please refer to the Remote Unit dedicated e-catalog entry in order to know the updated data about the weight of your Case U Remote Unit.

Figure 4-68 Case U Remote Unit

Case U Remote Units are available with and without the red cover, which serves for indication of public safety services equipment.

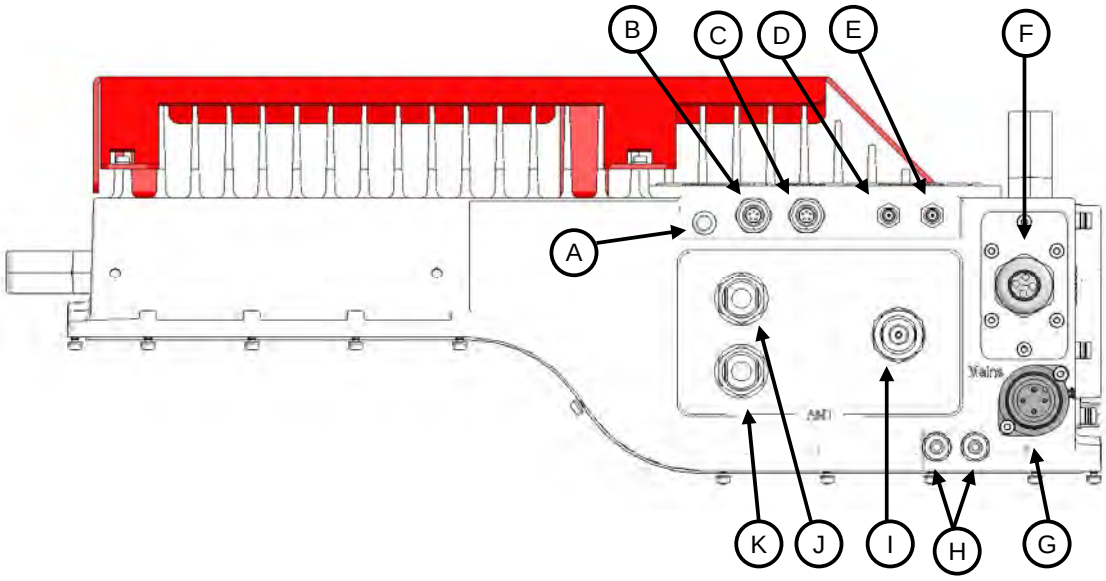

Figure 4-69 Case U connectors

A	Status LED	G	Power supply connector
B	Alarms lower band	H	Grounding bolts
C	Alarms higher band(s)	I	UL/DL antenna port higher band(s)
D	Expansion UL port	J	UL lower band, not connected in 2 band
E	Expansion DL port	K	DL lower band, not connected in 2 band
F	UL / DL optical ports		

Antenna Port

In the two band configuration the RU has one duplexed N-female antenna port Ⓘ for transmitting and receiving signals to and from distributed antennas. In the three band configuration the RU also has two non-duplexed N-female antenna ports Ⓙ and Ⓚ for UL and DL. These RF ports can be connected directly to an antenna (i.e. using RF jumper cables) or through splitters, allowing additional antennas to be fed by the RU.

Status LED

The status LED provides a visual warning of an alarm condition. The color of the LED indicates the severity of the alarm.

Expansion Ports

The Expansion UL and Expansion DL ports Ⓓ Ⓕ are QMA female connectors that are used to connect to a CommScope expansion unit to provide additional bands.

Optical Ports

The LC-APC optical connectors Ⓕ are used to send and receive the signals between the RU and the Master Unit's OTRx modules.

- A DL optical port receives downlink signals from the MU OTRx.
- A UL optical port transmits uplink signals to the MU OTRx.

Mains Connector

The RU receives its power through the Mains connector Ⓖ. The type of connector is dependent on the RU model. A 4-pin Amphenol connector is used for AC models and standard DC models. A 7-pin Amphenol connector is used for DC models powered by a dual cable supply.

Alarm connectors

The RU has two alarm relay outputs that can be used report alarms to external devices. The Alarm connectors Ⓑ, lower band and Ⓒ, higher bands are 5-pin Binder connectors.

4.10.2. Health and Safety

1. **Danger**: **Electrical hazard. Danger of death or fatal injury from electrical current. Obey all general and regional installation and safety regulations relating to work on high voltage installations, as well as regulations covering correct use of tools and personal protective equipment.**

2. **Danger: Electrical hazard. Danger of death or fatal injury from electrical current inside the unit in operation. Before opening the unit, disconnect mains power.**

3. **Caution:** Laser radiation. Risk of eye injury in operation. Do not stare into the beam; do not view it directly or with optical instruments.

4. **Caution:** High frequency radiation in operation. Risk of health hazards associated with radiation from the unit's inner conductor of the antenna port(s). Disconnect mains before connecting or replacing antenna cables.

5. **Caution:** High frequency radiation in operation. Risk of health hazards associated with radiation from the antenna(s) connected to the unit. Implement prevention measures to avoid the possibility of close proximity to the antenna(s) while in operation.

4.10.3. Property Damage Warnings

1. **Attention:** Due to power dissipation, the Remote Unit may reach a very high temperature. Do not operate this equipment on or close to flammable materials. Use caution when servicing the unit.

2. **Notice**: Although the Remote Unit is internally protected against overvoltage, it is strongly recommended to ground (earth) the antenna cables close to the repeater's antenna connectors for protection against atmospheric discharge.

3. **Notice**: ESD precautions must be observed. Before commencing maintenance work, use the available grounding (earthing) system to connect ESD protection measures.

4. **Notice:** Only suitably qualified personnel are allowed to work on this unit and only after becoming familiar with all safety notices, installation, operation and maintenance procedures contained in this manual.

5. **Notice:** Keep operating instructions within easy reach and make them available to all users.

6. **Attention:** Only authorized and trained personnel are allowed to open the unit and get access to the inside.

7. **Notice:** Read and obey all the warning labels attached to the unit. Make sure that all warning labels are kept in a legible condition. Replace any missing or damaged labels.

8. **Notice:** Only license holders for the respective frequency range are allowed to operate this unit.

9. **Notice**: Make sure the repeater settings are correct for the intended use (refer to the manufacturer product information) and regulatory requirements are met. Do not carry out any modifications or fit any spare parts, which are not sold or recommended by the manufacturer.

4.10.4. Compliance

1. **Notice:** For installations which have to comply with European EN50385 exposure compliance requirements, the following Power Density limits/guidelines (mW/cm²) according to ICNIRP are valid:
    - 0.2 for frequencies from 10 MHz to 400 MHz
    - F (MHz) / 2000 for frequencies from 400 MHz to 2 GHz
    - 1 for frequencies from 2 GHz to 300 GHz

2. **Notice:** For installations, which have to comply with FCC RF exposure requirements, the antenna selection and installation must be completed in a way to ensure compliance with those FCC requirements. Depending on the RF frequency, rated output power, antenna gain, and the loss between the repeater and antenna, the minimum distance D to be maintained between the antenna location and human beings is calculated according to this formula:

$$D_{[cm]} = \sqrt{\frac{P_{[mW]}}{4 * \pi * PD_{[mW/cm^2]}}}$$

where

- P (mW) is the radiated power at the antenna, i.e. the max. rated repeater output power in addition to the antenna gain minus the loss between the repeater and the antenna.
- PD (mW/cm²) is the allowed Power Density limit acc. to 47 CFR 1.1310 (B) for general population / uncontrolled exposures which is
    - F (MHz) / 1500 for frequencies from 300MHz to 1500MHz
    - 1 for frequencies from 1500MHz to 100,000MHz

RF exposure compliance may need to be addressed at the time of licensing, as required by the responsible FCC Bureau(s), including antenna co-location requirements of 1.1307(b)(3).

3. **Notice:** Installation of this equipment is in full responsibility of the installer, who has also the responsibility, that cables and couplers are calculated into the maximum gain of the antennas, so that this value, which is filed in the FCC Grant and can be requested from the FCC data base, is not exceeded. The industrial boosters are shipped only as a naked booster without any installation devices or antennas as it needs for professional installation.

4. **Notice:** For installations which have to comply with FCC/Industry Canada requirements:

   English:
   This device complies with FCC Part 15 and Industry Canada license exempt RSS standard(s). Operation is subject to the following two conditions: (1) this device may not cause interference, and (2) this device must accept any interference, including interference that may cause undesired operation of the device.

   This device complies with Health Canada's Safety Code. The installer of this device should ensure that RF radiation is not emitted in excess of the Health Canada's requirement. Information can be obtained at http: //www.hc-sc.gc.ca/ewh-semt/pubs/radiation/radio_guide-lignes_direct-eng.php.

   Changes or modifications not expressly approved by the party responsible for compliance could void the user's authority to operate the equipment.

   French:
   Cet appareil est conforme à FCC Partie15 d'Industrie Canada RSS standard exempts de licence (s). Son utilisation est soumise à Les deux conditions suivantes: (1) cet appareil ne peut pas provoquer d'interférences et (2) cet appareil doit accepter Toute interférence, y compris les interférences qui peuvent causer un mauvais fonctionnement du dispositif.

   Cet appareil est conforme avec Santé Canada Code de sécurité 6. Le programme d'installation de cet appareil doit s'assurer que les rayonnements RF n'est pas émis au-delà de l'exigence de Santé Canada. Les informations peuvent être obtenues:
   http://www.hc-sc.gc.ca/ewh-semt/pubs/radiation/radio_guide-lignes_direct-fra.php

   Les changements ou modifications non expressément approuvés par la partie responsable de la conformité pourraient annuler l'autorité de l'utilisateur à utiliser cet équipement.

5. **Notice:** Corresponding local particularities and regulations must be observed. For national deviations, please refer to the respective documents included in the manual CD that is delivered with the unit.

6. **Note:** For a Class A digital device or peripheral:

   This equipment has been tested and found to comply with the limits for a Class A digital device, pursuant to part 15 of the FCC Rules. These limits are designed to provide reasonable protection against harmful interference when the equipment is operated in a commercial environment. This equipment generates, uses, and can radiate radio frequency energy and, if not installed and used in accordance with the instruction manual, may cause harmful interference to radio communications. Operation of this equipment in a residential area is likely to cause harmful interference in which case the user will be required to correct the interference at his own expense.

7. **Note:** This unit complies with European standard EN60950.

4.10.5. TFAx Case U Mechanical Installation

Each Case U Remote Unit kit includes:

1. a RU TFAx
2. a power supply plug

4.10.5.1. Health and Safety for Mechanical Installation

Read and observe chapter *4.10.2. Health and Safety.*

1. **Caution:** Risk of injury by the considerable weight of the unit falling. Ensure there is adequate manpower to handle the weight of the system.
2. **Caution:** Risk of serious personal injury by equipment falling due to improper installation. The installer must verify that the supporting surface will safely support the combined load of the electronic equipment and all attached hardware and components. The screws and dowels (wall anchors) used should also be appropriate for the structure of the supporting wall.

4.10.5.2. Property Damage Warnings for Mechanical Installation

1. **Attention:** Do not install the unit in a way or at a place where the specifications outlined in the Environmental and Safety Specifications leaflet of the supplier are not met.
2. **Attention:** Due to power dissipation, the Remote Unit may reach a very high temperature. Ensure sufficient airflow for ventilation.
3. **Notice:** Exceeding the specified load limits may cause the loss of warranty.
4. **Notice:** When connecting and mounting the cables (RF, optical, mains, ...) ensure that no water can penetrate into the unit through these cables.
5. **Notice:** If any different or additional mounting material is used, ensure that the mounting remains as safe as the mounting designed by the manufacturer. The specifications for stationary use of the Remote Unit must not be exceeded. Ensure that the static and dynamic strengths are adequate for the environmental conditions of the site. The mounting itself must not vibrate, swing or move in any way that might cause damage to the Remote Unit.

Specified torques must be observed for certain mounting procedures according to the following table:

Type	***Pins***	***Hex nuts***	***Screws***
Thread	M 6	M 6	M6
Specified torques	3.3 N-m	3.3 N-m	3.3 N-m

table 4-3 Specified torques

4.10.5.3. Wall-Mounting

1. Check the suitability of the wall-mounting kit and the wall.

2. Install the wall-mounting bracket using 4 M6 screw anchors (not included*) or suitable lag bolts according to the drilling layout. Confirm that the bracket is securely fastened to the wall. Installer must verify that the supporting surface will safely support the combined load of the electronic equipment and all attached hardware and components.

   * The M6 screw anchors are not included as part of the RU delivery because the suitable type depends on the on-site conditions (wall structure and materials). Use screw anchors that are appropriate for the mounting surface.

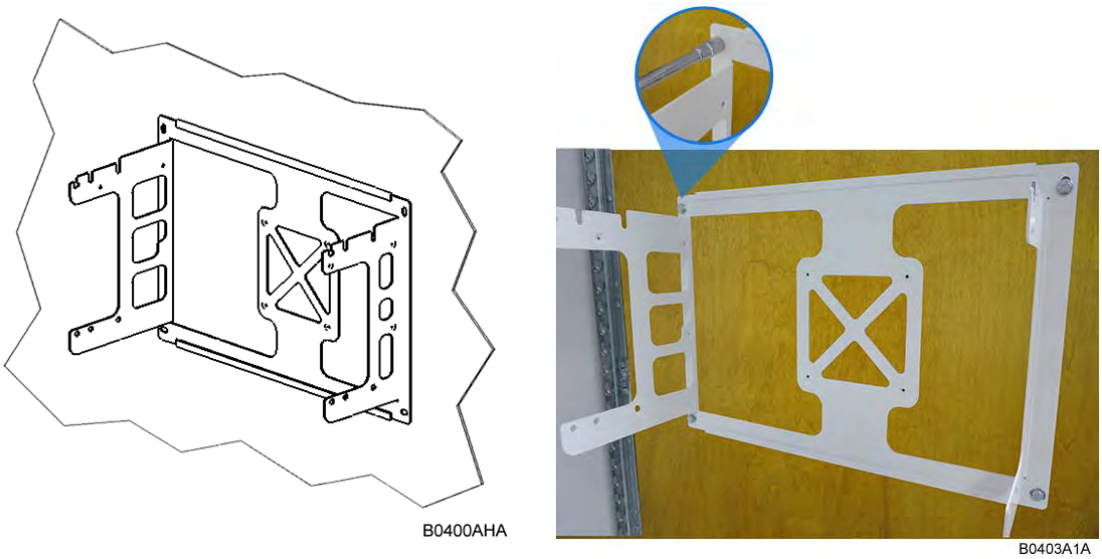

Figure 4-70 Wall-mounting bracket

3. Attach an M6 threaded pin to the Remote Unit by inserting it into the threaded hole adjacent to the power supply and turning it clockwise. Tighten the pin securely with a socket wrench.

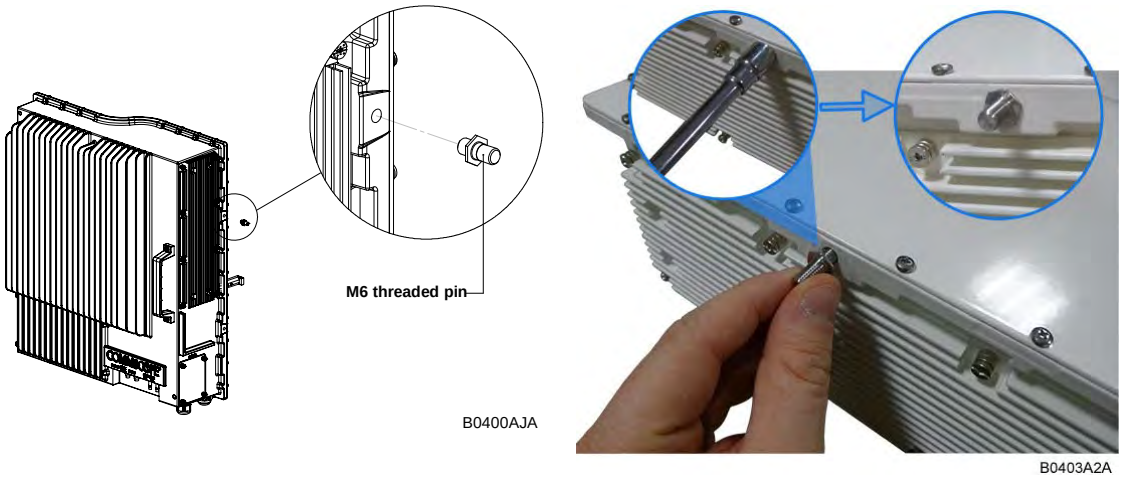

Figure 4-71 RU threaded pin power supply side

4. Attach an M6 threaded pin to the Remote Unit by inserting it into the threaded hole above the handle and turning it clockwise. Tighten the pin securely with a socket wrench.

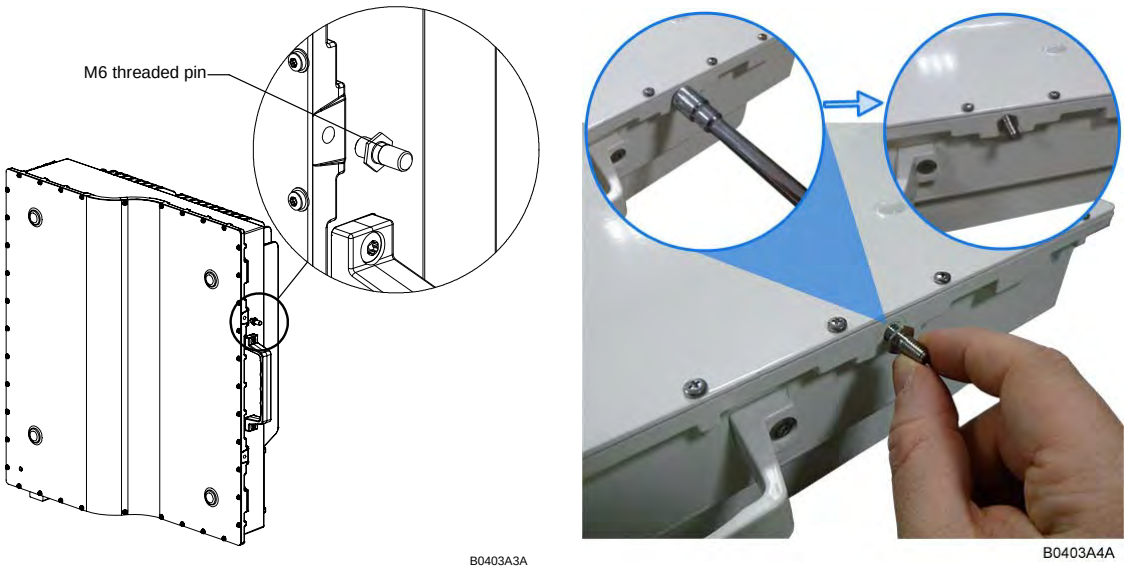

Figure 4-72 RU threaded pin narrow side

4.10.6. Wall Mounting Procedure

- Follow the instructions for mounting the bracket and installing the threaded pins in *chapter 4.10.5.3.*
- Install the Remote Unit on the wall-mounting bracket by lifting the RU into place and using both handles and lowering it down onto the bracket. The M6 pins must align with the slots in the bracket to support the RU.

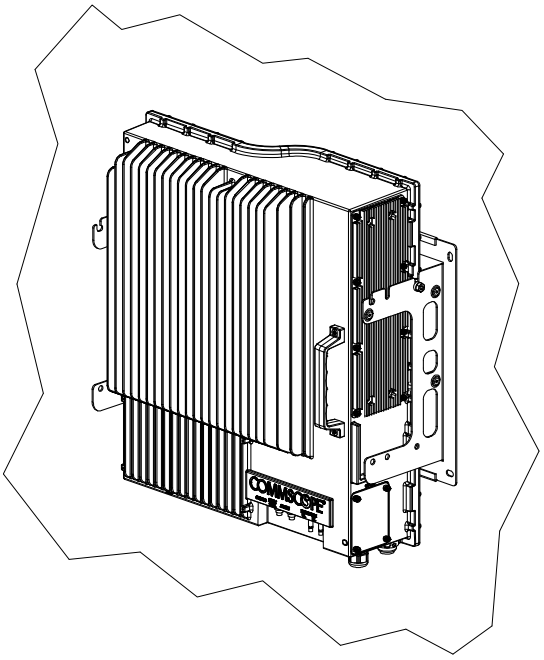

Figure 4-73 Place RU onto wall mounting bracket

- Fasten the lower section of the Remote Unit to the bracket using a washer and an M6x12 screw (on both sides). Slide a washer over each screw and then insert the screw and tighten it securely.

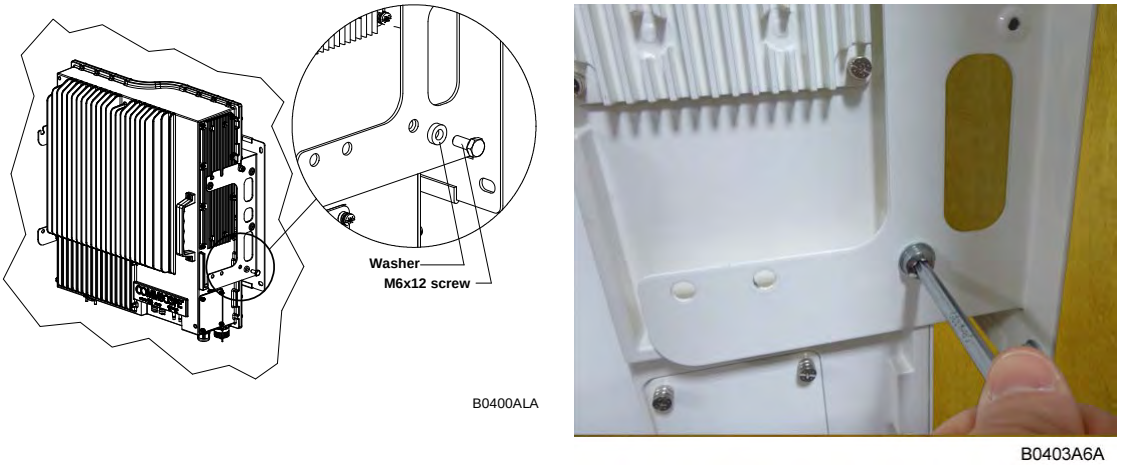

Figure 4-74 Install M6x12 screws and washers for single mount

- Fasten the Remote Unit to the bracket using a washer and M6 nut. Slide the washer over the threaded pins that you installed previously (chapter *4.10.5.3*) and then screw the nut onto the pins (on both sides) and tighten securely.

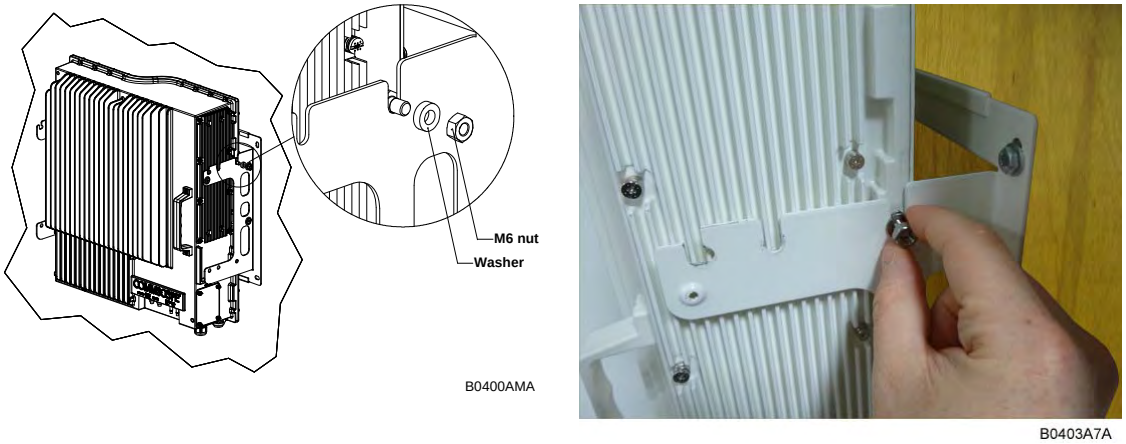

Figure 4-75 Attach M6 nut to threaded pins for single mount

- Confirm that all screws and nuts have been fastened and the unit is securely mounted to the wall.

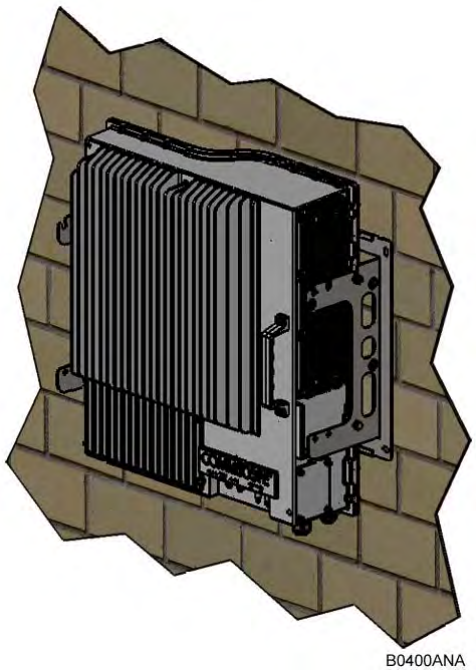

Figure 4-76 Completed RU Mount

4.10.7. TFAx Case U Electrical Installation

4.10.7.1. Health and Safety for Electrical Installation

Read and observe chapter *4.10.2 Health and Safety*.

1. **Danger: Electrical hazard. Danger of death or fatal injury from electrical current. Obey all general and regional installation and safety regulations relating to work on high voltage installations, as well as regulations covering correct use of tools and personal protective equipment.**

2. **Danger: Electrical hazard. Danger of death or fatal injury from electrical current inside the unit in operation. Before opening the unit, disconnect mains power.**

4.10.7.2. Property Damage Warnings for Electrical Installation

1. **Attention:** It is compulsory to ground (earth) the unit before connecting the power supply. Grounding bolts are provided on the cabinet to connect the ground-bonding cable.

2. **Attention:** If the mains connector of the Remote Unit is not easily accessible, a disconnect device in the mains power circuit must be provided within easy reach.

3. **Attention:** A connection of the mains supply to a power socket requires the power socket to be nearby the Remote Unit.

4. **Attention:** Before connecting or disconnecting the mains connector at the Remote Unit, ensure that mains power supply is disconnected.

5. **Attention:** Make sure that an appropriate circuit breaker acting as a disconnect device (as required by IEC/EN60950-1) and an overcurrent limiting device are connected between mains power and the Remote Unit.

6. **Attention:** Incorrectly wired connections can destroy electrical and electronic components.

7. **Notice:** Although the Remote Unit is internally protected against overvoltage, it is strongly recommended to ground (earth) the antenna cables close to the antenna connectors of the Remote Unit for protection against atmospheric discharge. In areas with strong lightning, it is strongly recommended to install additional lightning protection.

8. **Notice:** To avoid corrosion at the connectors caused by electrochemical processes, the material of the cable connectors must not cause a higher potential difference than 0.6 V (see electrochemical contact series).

9. **Notice:** For unstabilized electric networks, which frequently generate spikes, the use of a voltage limiting device is advised.

10. **Notice:** The unit complies with the surge requirement according to EN 61000-4-5 (fine protection); however, installation of an additional medium (via local supply connection) and/or coarse protection (external surge protection) is recommended depending on the individual application in order to avoid damage caused by overcurrent.

11. **Notice:** Observe the labels on the front panels before connecting or disconnecting any cables.

4.10.7.3. Grounding (Earthing)

The RU must be grounded (earthed).

1. Connect an earth-bonding cable to the grounding bolt(s) connection provided on the outside of the Remote Unit (near the Mains connector). Do not use the grounding connection to connect external devices.

Figure 4-77 Grounding bolts

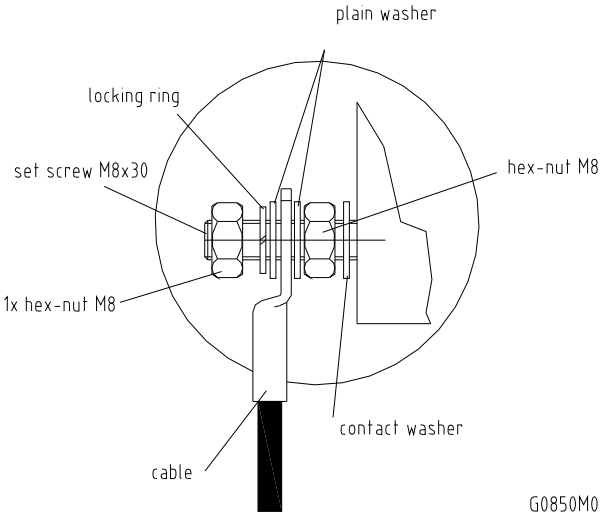

Figure 4-78 Grounding bolt, schematic view

2. After loosening the hex nut, connect the earth-bonding cable between the two washers as illustrated in the figures above.

3. Then, fasten all parts again by tightening the hex nut.

4. Connect the other end of the ground wire to a suitable permanent ground following local electrical code practices.

4.10.7.4. Mains Power Connection

Before connecting electrical power to the units, the system must be grounded (earthed) as described in the previous chapter.

The Mains power must be connected to the Mains connector of the unit for operation of the RU. A power cable is delivered with each RU. The type of power cable delivered is dependent on the type of power supply in the RU.

The AC power cable is a 3.2 m (10.5 ft) 16 AWG cable with a 4-pin Amphenol C016 series plug on one end to connect to the RU Mains connector. The other end of the cable is un-terminated with 3 end splices to connect to the AC power source. A 10 m (33.7 ft) AC power cable is also available as an option.

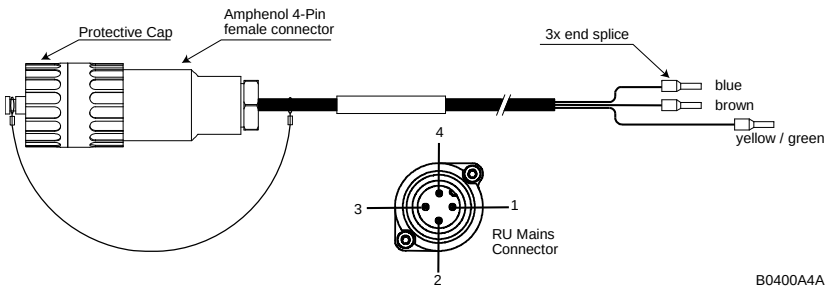

Figure 4-79 AC power cable

4-Pin Amphenol C016 Series		
Pin	**Name**	**Color**
1	Phase	Brown
2	Neutral	Blue
3	n.c.	n.c
4	Ground	Yellow / Green

table 4-4 AC power cable

The standard DC power cable is a 3.2 m (10.5 ft) 13 AWG cable with a 4-pin Amphenol C016 series plug on one end to connect to the RU Mains connector. The other end of the cable is un-terminated with 2 end splices to connect to the -48 Vdc power source.

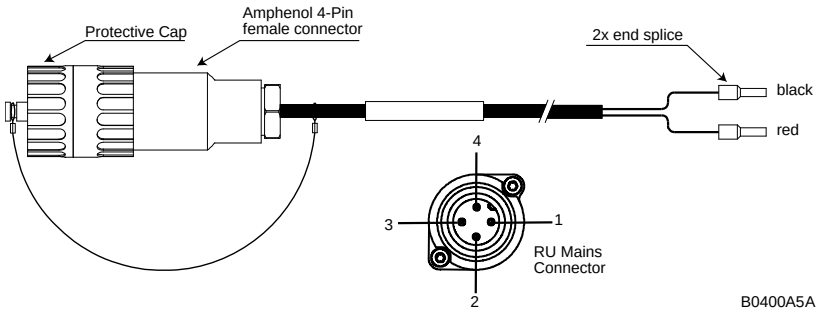

Figure 4-80 DC power cable

4-Pin Amphenol C016 Series		
Pin	**Name**	**Color**
1	n.c	n.c
2	–48V	Black
3	0V	Red
4	n.c.	n.c

table 4-5 DC power cable

The Vdc/100 power cable is available for locations where the power drawn on each cable must be limited to a maximum of 100 VA. This cable is a 3.2 m (10.5 ft) 16 AWG cable with a 7-pin Amphenol C016 series plug on one end to connect to the RU Mains connector. The other end of the cable is un-terminated with 4 end splices to connect to the -48 Vdc power source.

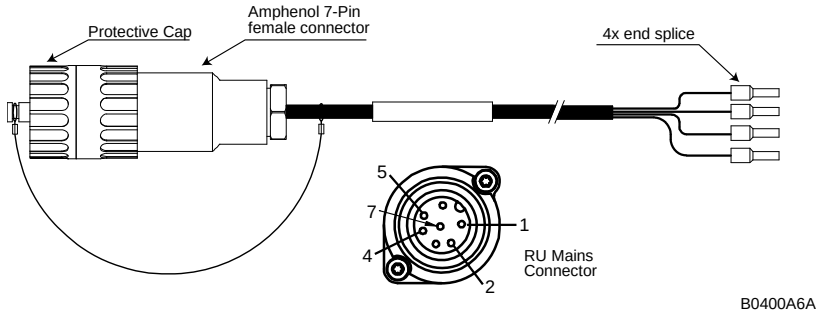

Figure 4-81 Vdc/100 power cable

7-Pin Amphenol C016 Series		
Pin	**Name**	**Color**
1	0V	White
2	–48V	Black
3	n.c.	-
4	0V	Red
5	–48V	Green
6	n.c	-
7	n.c	-

table 4-6 Vdc/100 power cable

Notice: For the AC power supply connection, a minimum cross section of 1.5 mm^2 is required and for the DC power supply connection, a minimum cross section of 2.5 mm^2 is required. Each wire must observe the applicable national regulations regarding loop impedance, voltage drop, and methods of installation. Make sure to connect the correct voltage to the unit.

Notice: Do not connect or disconnect the power cable at the mains connector while power is on. Turn off mains* power before connecting the power cable at the Remote Unit, then, engage mains power again.

* Mains power must be interruptible with an external mains breaker. For the mains breaker, observe the following recommendation:

120 Volt / 20 Amp max. or 240 Volt / 16 Amp, single-phase, 50 / 60 Hz AC service is needed, i.e. the external AC breaker should be 20 Amps max. for 120-Volt service or 16 Amps for 240-Volt service.

For the DC power supply, observe the local regulations of the DC service provider.

Use the following method to install and connect the Mains power to the RU:

1. Locate the Mains power cable that was delivered with the RU.
2. Locate or install a suitable power junction box or receptacle near the RU and route the power cable from the power source to the RU. Do not connect the cable to the RU's Mains connector at this time. The power source must be interruptible.
3. The Mains cable must be properly secured observing local regulations and electrical codes. Be sure to allow enough slack in the cable at the RU to plug or unplug the cable into the Mains connector of the RU.
4. Wire the power cable to the junction box or receptacle. Refer to the color code and pin numbers depending on the type of power supply used by the RU.
5. With the cable's Mains plug disconnected from the RU, turn the circuit breaker on, unscrew the plug's protective cover, and carefully test the plug with a voltmeter to ensure that the voltage and polarity are correct.
6. Once the testing has been completed, turn off the circuit breaker.
7. Unscrew the protective cover from the Mains connector of the RU.
8. Insert the plug into the Mains connector and tighten the clamping ring until it is hand tight. Do not over-tighten the clamping ring.

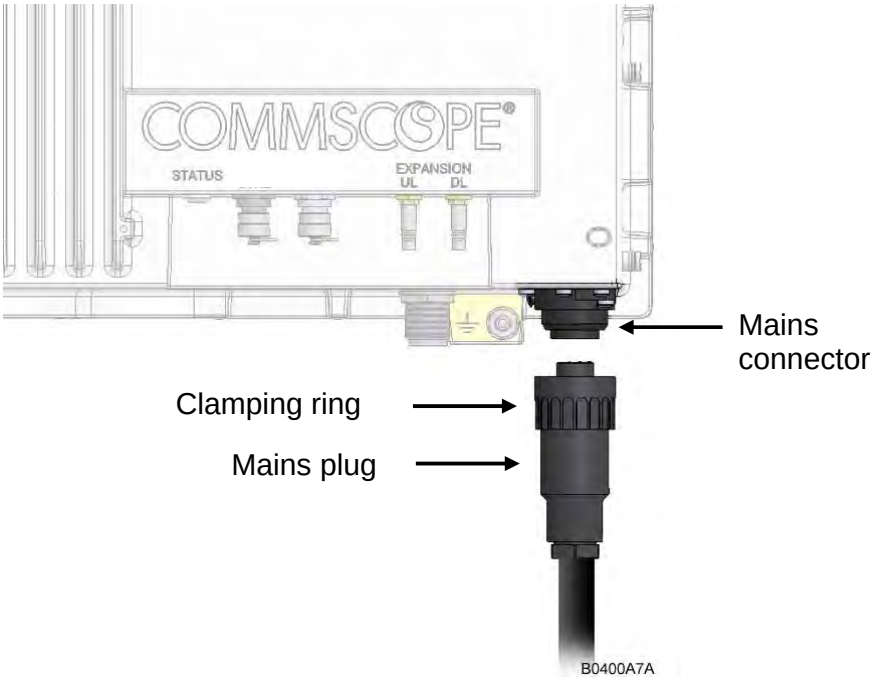

Figure 4-82 Connect Mains plug

4.10.7.5. Antenna Connection

The Remote Unit has one N-type antenna connector(s). For mounting the cable connector, it is recommended to refer to the corresponding documentation of the connector manufacturer. The bending radius of the antenna cables must remain within the given specifications.

The selection of cable and antenna is an important consideration. On the one hand, a cable with higher loss is less expensive but, on the other hand, it impairs performance.

Notice: Use an appropriate torque wrench for the coupling torque of N-type connectors (2 N-m / 1.5 ft lb with 13/16 in opening to tighten the N-type antenna connectors. For example, use torque wrench of item no. 244379 available from the *CommScope e-catalog*. Do NOT use your hands or any other tool (e.g. a pair of pliers)! This might cause damage to the connector and lead to a malfunction of the Remote Unit.

Notice: To minimize passive inter-modulation (PIM) distortion, attention must be paid to the physical condition of the connector junctions. Do not use connectors that show signs of corrosion on the metal surface. Prevent the ingress of water into the connector. Attach and torque the connectors properly.

1. Route the antenna cable from the antenna or splitter to the base of the RU.
2. Cut the cable to length and terminate the cable with an N-type male connector.
3. Remove the red plastic protective cover from the N-type female connector.
4. Using an appropriate torque wrench, connect the cable to the antenna port of the RU.

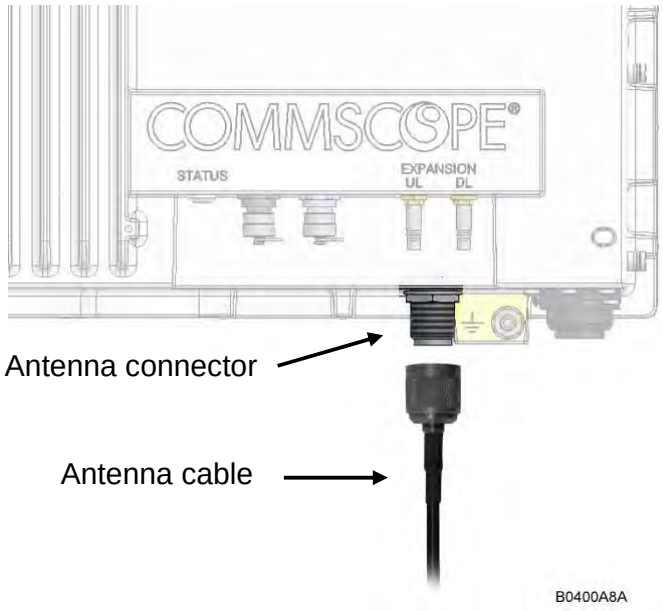

Figure 4-83 Antenna connection

4.10.7.6. Alarm Ports

The Alarm port provides alarm contacts that are used to report alarms generated by the RU to external equipment. The connector is a 5-pin Binder 712 series connector.

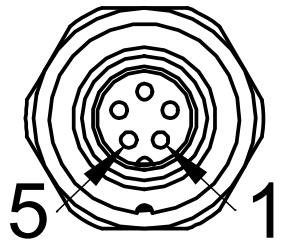

B0400AZA

Figure 4-84 Alarm Connector

5-Pin Binder 712 Series	
Pin	**Assignment**
1	EXT1_Alarm
2	EXT1_GND
3	n.c.
4	EXT2_Alarm
5	EXT_GND

table 4-7 Alarm Connector

4.10.8. Low Power RU Optical Installation

4.10.8.1. Optical-Fiber-Cable Connection - Rules

<u>Main optical system parameters:</u>

Fiber:

- Single mode fiber, type is 9.5/125 µm
- Fiber-cable connectors LC/APC

ION-U system:

☞ **Note:** The pigtails for the connection between Master Unit and Remote Unit must have a sufficient length. Protection for the optical fibers must be provided where the fibers feed into the units.

☞ **Note:** The system attenuation of the optical fibers, including the connectors, must not exceed 5 dB.

System attenuation and attenuation of optical components must be determined. This can be achieved by measuring attenuation and reflection with an appropriate measuring instrument. For pigtails, a total value of < 0.4 dB (measured to a reference plug) can be assumed due to the dead zone of the reflectometer. These measurements must be made with a sufficient length of optical fiber, at the input and output of the device which has to be measured.

Fiber-System Installation:

Fiber-cable connectors have to be of the same type (LC/APC) as the connectors used for the unit. The fiber-optic cables are connected to the optical transceiver.

Notice: Angled connectors are not compatible with straight optical connectors; non-compatibility of connectors will result in permanent damage to both connectors.

Before connecting the fiber cables, follow the procedure below to ensure optimized performance. It is important for these procedures to be carried out with care:

- Remove fiber-optic protective caps just before making the fiber connections. Do not leave any LC/APC connectors open as they may attract dirt. Unused optical connectors must always be covered by their caps.

- Do not bend the fiber-optic cable in a tight radius (< 5 cm) as this may cause damage to the cable and interrupt transmission.

- Using high-grade alcohol and lint-free cotton cleaning swabs, clean the end of the fiber-optic cable that will be inserted in the optical connectors on the donor interface box. Use a fiber end-face inspection tool to scan both, the class fiber and its surrounding area.

- Check for dirt on the cladding, chips/pits, dirt on the ferrule, and scratches.

- Connect the fiber-optic cables by inserting the cable end into the laser receptacle.

- Do not use any index-matching gels or fluids of any kind in these connectors. Gels are intended for laboratory use and attract dirt in the field.

☞ **Note:** **Care should be taken when connecting and disconnecting fiber-optic cables - use the connector housing to plug or unplug a fiber. Scratches and dust significantly affect system performance and may permanently damage the connector. Always use protective caps on fiber-optic connectors not in use.**

<u>Cleaning Procedure for Fiber-Optical Components:</u>

Any contamination in the fiber connection results in additional optical transmission loss which could cause whole system failure. It is thus recommended that every fiber connector be inspected and cleaned prior to mating.
The goal is to eliminate any dust or contamination and to provide a clean environment for the fiber-optic connection.

When you clean fiber components, always complete the following steps carefully:

Caution: Laser radiation. Risk of eye injury in operation. Do not stare into the beam; do not view it directly or with optical instruments.

1. Turn off the ION-U system (laser sources) before you inspect fiber connectors.
2. Check the connectors or adapters with a fiberscope before cleaning.
3. If the connector is dirty, clean it with a lint-free wipe (dry cleaning).
4. Inspect the connector.
5. If the connector is still dirty, repeat the dry cleaning technique.
6. Inspect the connector.
7. If the connector is still dirty, clean it with 99% isopropyl alcohol (wet cleaning) followed immediately with a dry clean in order to ensure no residue is left on the surface.
8. Repeat steps 5 through 7 until surface is clean.

Note: For a more detailed description, please refer to:
http://www.cisco.com/en/US/tech/tk482/tk876/technologies_white_paper09186a0080254eba.shtml

4.10.8.2. Optical cable installation

1. Locate the Optics connector cover on the lower right side of the RU. Loosen the four cover screws, remove the cover, and set it aside. Removing this cover allows access to the UP and DL optical connectors.

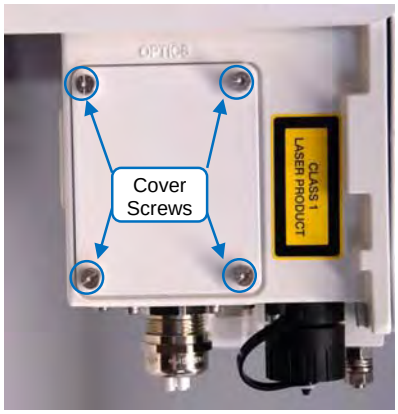

Figure 4-85 Remove optics cover

2. Remove the sealing nut from the optical cable gland at the bottom of the RU.

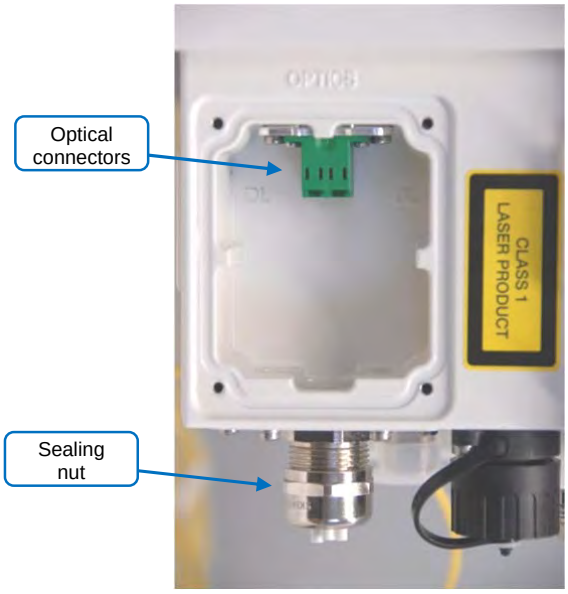

Figure 4-86 Remove sealing nut

3. Remove the split-seal and clamp jacket.

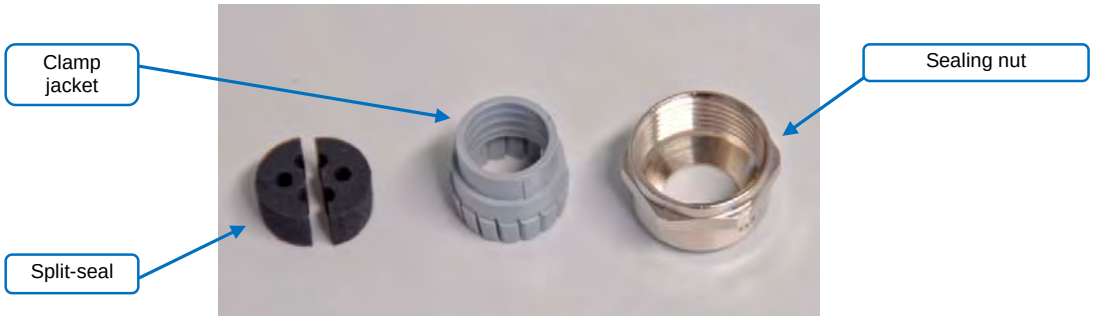

Figure 4-87 Split-seal and clamp jacket

4. Insert the optical cables through the sealing nut and the clamp jacket.

5. Then insert the optical cables through the opening in the cabinet.

6. Connect the optical cables to the proper UL and DL LC/APC connectors.

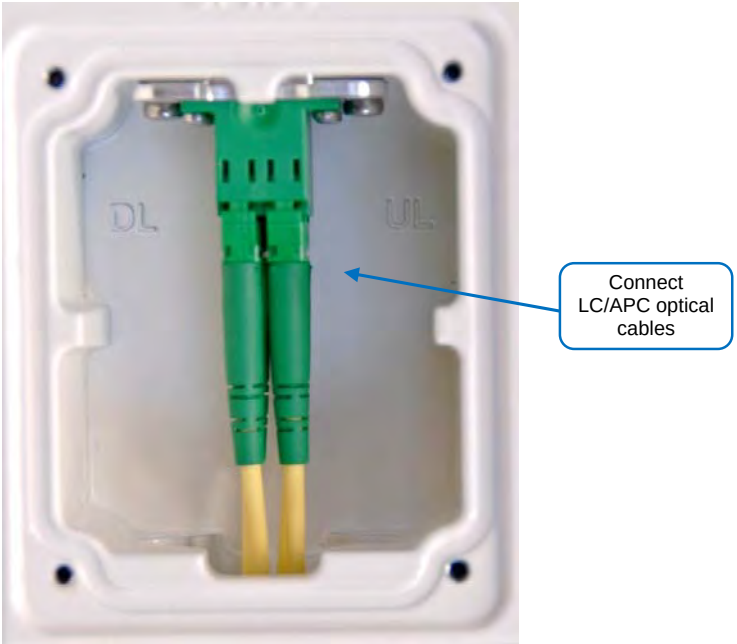

Figure 4-88 Optical cables connected

7. Separate the two halves of the split-seal. Place one cable into the hole and the other in the groove of each half of the split-seal. Insert the spit seal into the clamp jacket.

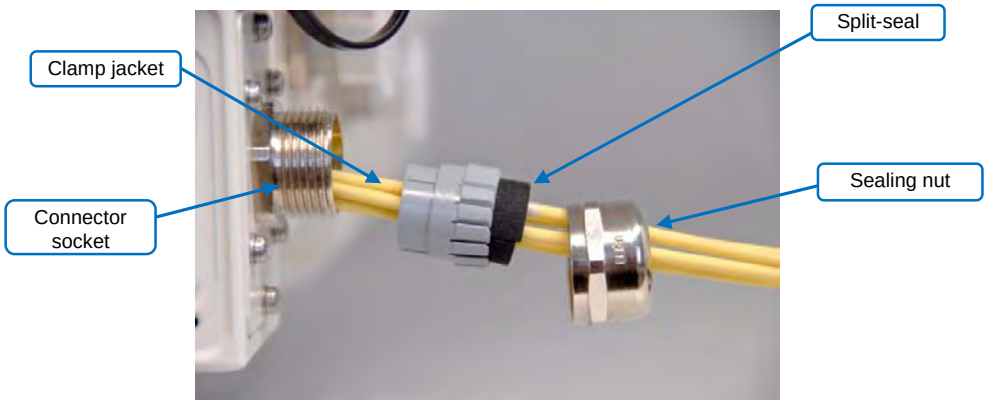

Figure 4-89 Place cables into split-seal

8. Insert the clamp jacket with split seal to the connector socket and fasten them with the sealing nut.

Figure 4-90 Optical cable installed

9. Replace the optics metal cover and tighten the four screws that were loosened in step 1.

4.10.8.3. RU Power Supply Replacement

The power supply for the RU is a field replaceable module. The type of power supply used by the RU (AC, DC, or Vdc/100) is dependent on the model number of the RU.

Attention: Before starting any maintenance on the RU, read and observe *chapter 4.10.2 Health and Safety* and the electrical installation information in *chapter 4.10.7.1 Health and Safety for Electrical Installation.*

1. Danger: Electrical hazard. Danger of death or fatal injury from electrical current inside the unit in operation. Before opening the unit, disconnect mains power.

2. Caution: The unit reaches high temperature in operation. Risk of burns by hot surface. Do not touch the unit before it has sufficiently cooled down.

1. Switch off the circuit breaker supplying power to the RU.
2. Once you have confirmed that the power has been shutdown, remove Mains power connector from the RU.

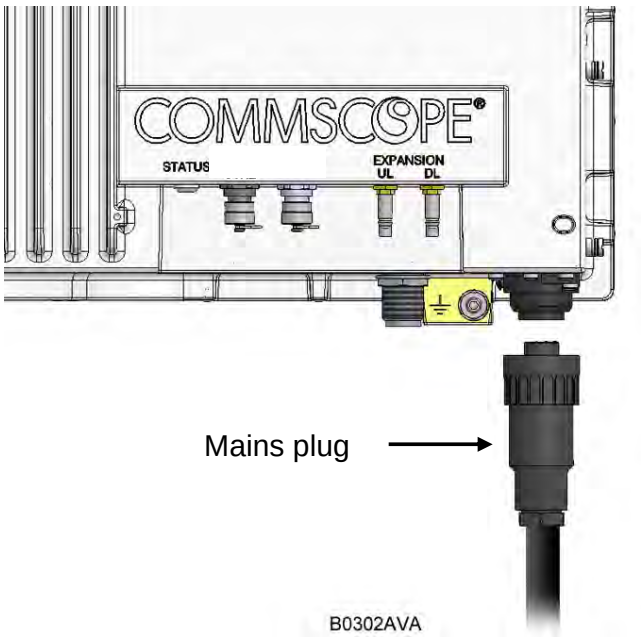

Figure 4-91 Disconnect Mains power

3. Locate the power supply on the right side of the Remote Unit.

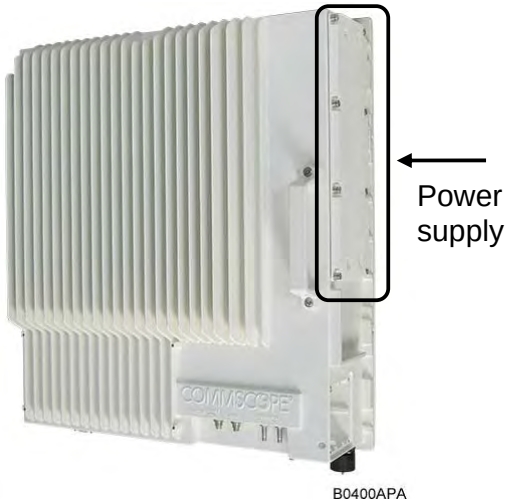

Figure 4-92 RU power supply location

4. Use a #2 Phillips head or slotted screwdriver to loosen the 8 universal slot/Phillips captive power supply screws and carefully remove the supply. The weight of the power supply must be supported as you loosen the screws to prevent damage to the supply.

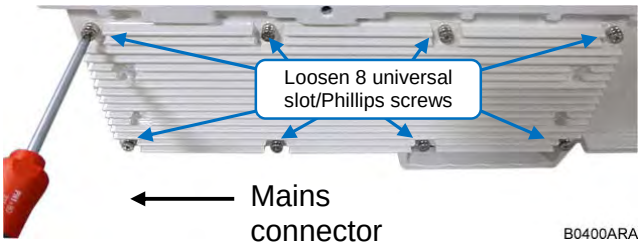

Figure 4-93 8 RU power supply screws

5. Carefully remove the power supply from the unit. Do not attempt to support the weight of the supply with the attached input and output cables.

Figure 4-94 RU power supply with cables

6. Locate the input cable connector for the power supply on the right side of the supply.
7. Loosen the 3 Phillips head terminal screws and remove the connector.

Figure 4-95 RU power supply input cable

8. Locate the output connector for the power supply on the left side of the supply.
9. Loosen the 2 Phillips head screws and remove the output connector.

Figure 4-96 RU power supply output cable

10. Remove the defective supply.

Figure 4-97 RU with power supply removed

11. Replace the defective power supply with the new power supply.
    It is very important to confirm that the replacement supply is the same type as the original supply. **The AC, DC, and Vdc/100 supplies are not interchangeable.**
12. Reconnect the input and output connectors, and tighten the associated terminal screws.

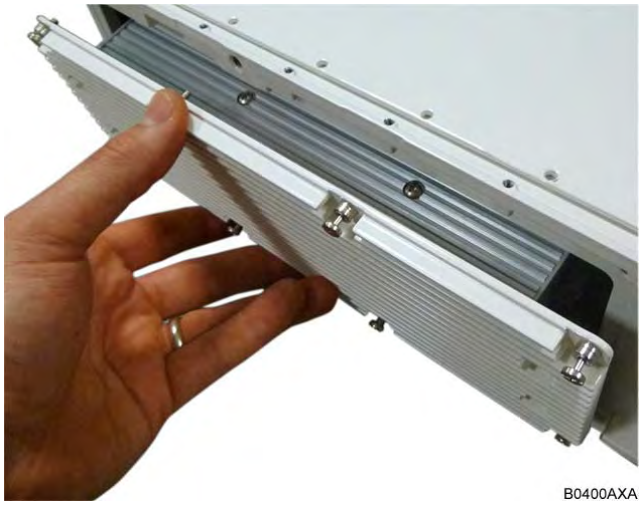

Figure 4-98 RU with replacement power supply

13. Insert the power supply into the RU carefully to avoid damaging any cables. The supply must be supported until the 8 universal slot/Phillips captive power supply screws have been tightened.
14. Tighten the 8 universal slot/Phillips captive power supply screws.

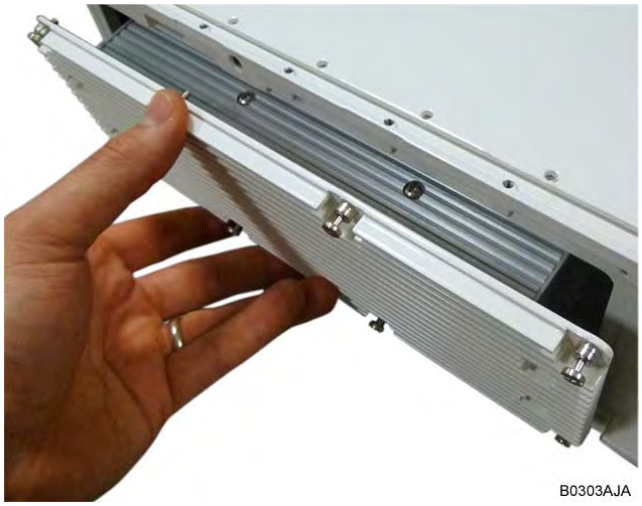

Figure 4-99 RU insert power supply

15. Reconnect the Mains power plug.
16. Switch on the breaker and check the RU for proper operation.

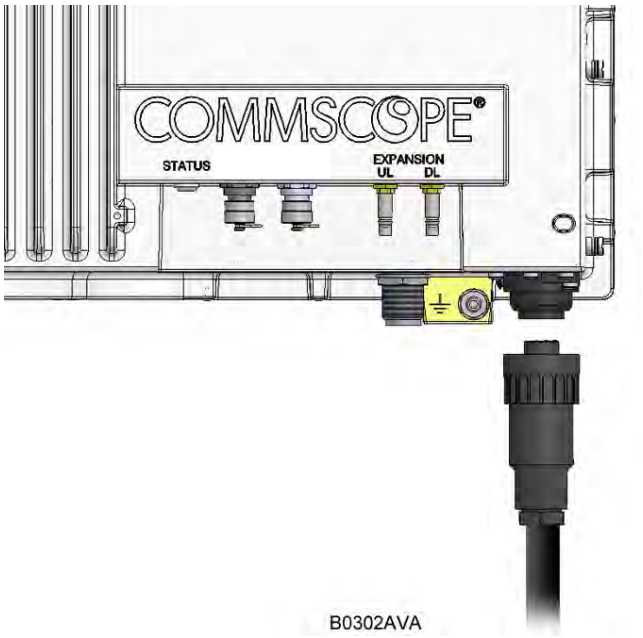

Figure 4-100 Reconnect Mains power

4.11. REMOTE UNIT START-UP

Before switching on the Remote Unit, make sure that:

- the modules hosted in the Master Unit have been connected each other with RF jumpers, according to the system design
- every TFLN master optical TRX has been connected to its Remote Units
- each Remote Unit has been connected to its coverage antennas

Note: **For a correct system start-up, all Remote Units have to be switched on before the Master Unit.**

Once the Remote Unit has been switched on, its behaviour could be checked by looking at the control LEDs. When the system starts-up, their status can be summarized by the following steps:

1. When the Remote Unit is turned on, both the LEDs turn on for a couple of seconds.
2. After that, the unit green LED remains on (thus indicating proper power supply), while the red LED switches off as soon as the TFLN Master optical TRX is turned on (meaning that DL optical power is OK and no alarms are present).
3. Once the TFLN Master optical TRX has been switched on, if the red LED remains on, please refer to the troubleshooting section.
4. After being switched on the RU in order to be recognized by the supervision management system the corresponding TFLN Master optical TRX must carry out the discovery phase (please refer to the Supervision System Manual for more details). During this phase (which lasts up to maximally four minutes depending on the system complexity) the TFLN LED blinks. Do not connect/disconnect any cables or pieces of equipment during the discovery phase! This may result in the identification failure of the RU.

Note: **In case discovery does not start automatically, check through either the LMT or the Remote Supervision if the Remote Unit / discovery has been disabled (refer to LMT or Remote Supervision System manuals for further information).**

4.12. CASE R2, R2E, AND R4E REMOTE UNIT SETTINGS THROUGH RS232

You can get or set information of Remote Units in case R2 and R2E through a local connection to the RS232 port. This can be done through the HyperTerminal (a program available by default in Windows)

The below described steps have to be followed:

1. Save the HyperTerminal connection in order to recall it when needed

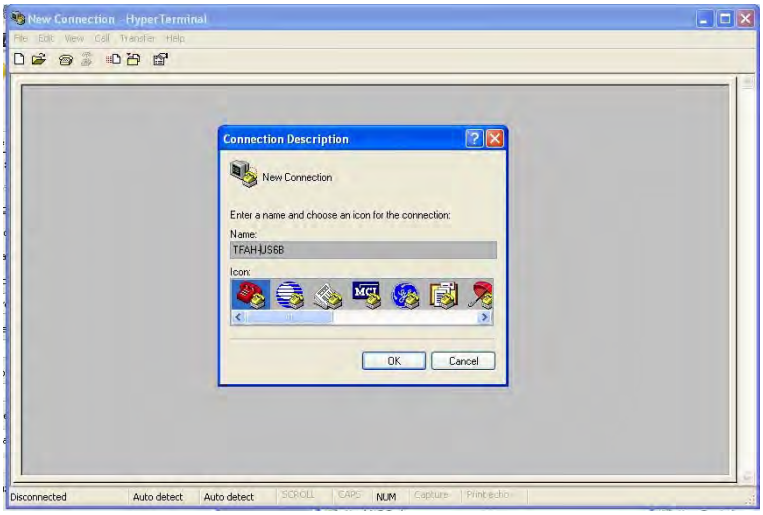

2. Choose a COM port and configure it as per below

3. Plug the laptop to the RS232 port of the Remote Unit and press ENTER
   Type the password "andrew" and press ENTER to login.
   If you don't press any key the Remote Unit will logout after 2 minutes.

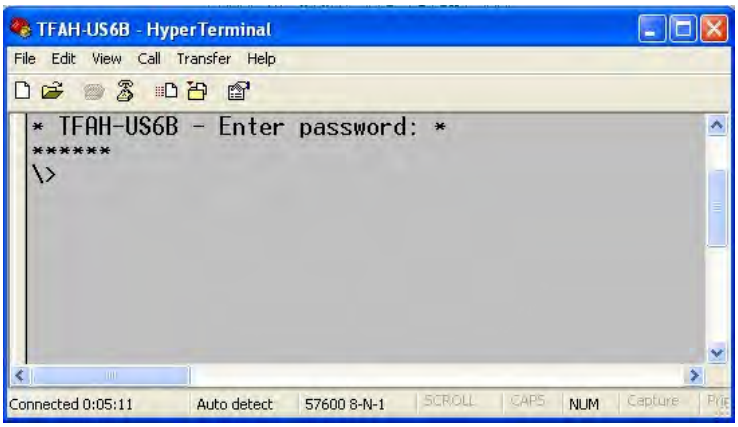

4. Type "help" and press ENTER to have a brief list of the supported commands for the Remote Unit you have

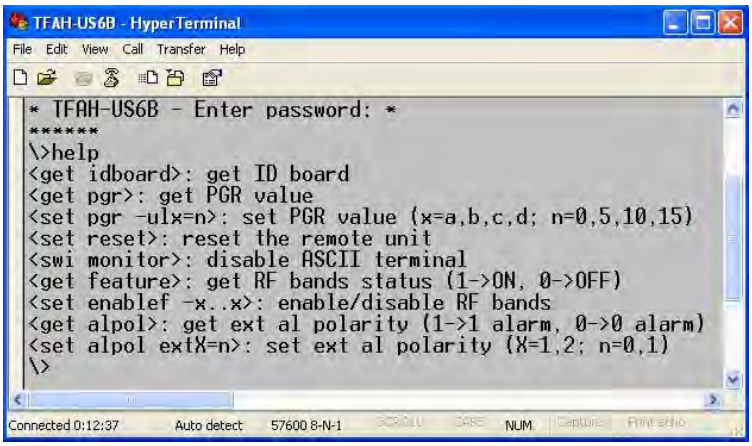

5. The possible commands have been described in the following.

<u>get idboard</u>
Shows the identification data of the unit:
CTV: class, type, version
SN: serial number
FW: firmware revision
CKS: firmware checksum

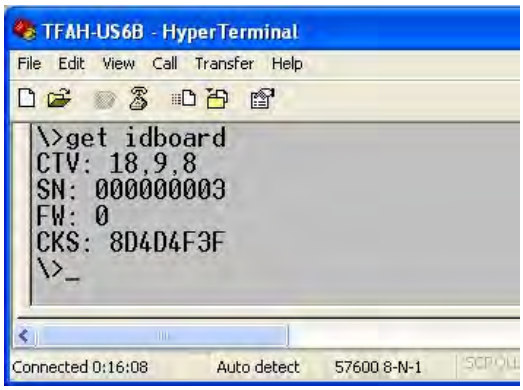

get pgr
Shows the values of pgr attenuators for each band.

set pgr
It let change the pgr values, one band each command.
The possible values are 0, 5,10,15 dB.
Examples of the command syntax are:
"set pgr –ula=5" for AWS
"set pgr –ulb=5" for EPCS

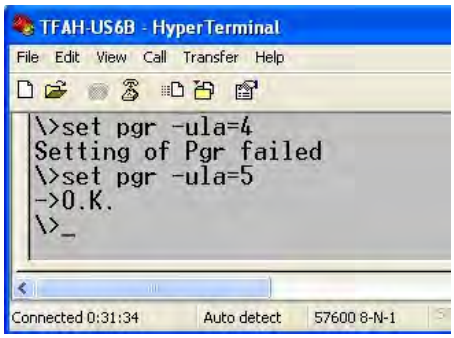

set reset
Performs a software reset of the unit

swi monitor
Disables ASCII protocol.

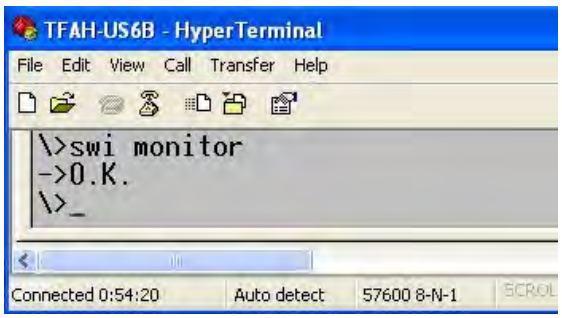

get feature
Shows the status of the bands of the unit (1->enabled; 0->disabled).

set enablef

Let enable/disable the bands of theunit.
The command syntax is: "set enable -xxxxxxxxxxxxxxxxxxx" where x is the hexadecimal digit of a code provided by the factory given the SN of the unit
The command become operative only after reset

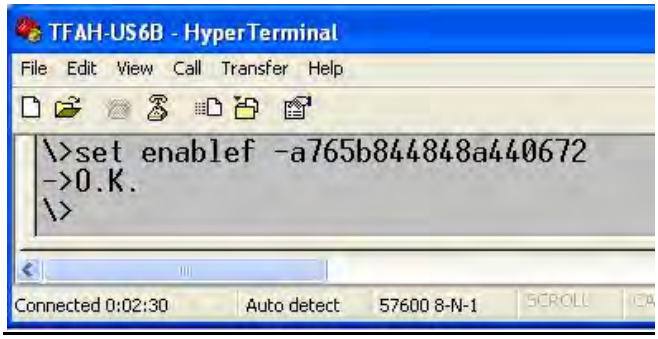

get alpol

Shows the configuration of external alarm connectors.
1-> high level alarm, low level not alarm
0-> low level alarm, high level not alarm

set alpol

Let change the polarity of external alarm.
The command syntax is: "set alpol ext1=1" "set alpol ext2=1"
1-> high level alarm, low level not alarm
0-> low level alarm, high level not alarm

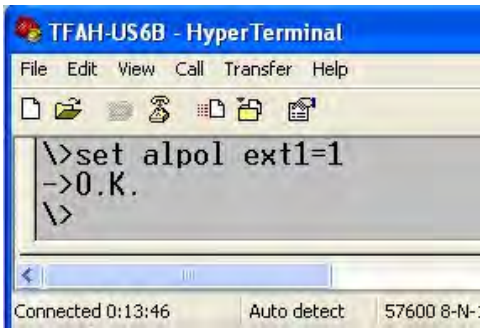

4.13. TROUBLESHOOTING

4.13.1. List of All Alarms

Errors are indicated by LEDs on the TFAx front panel, as well as by LMT or the Supervision System (running on the remote supervision unit). Both the LMT and the Supervision System can provide complete information about the cause of the alarm. As a consequence, troubleshooting is faster if failure detection is carried out directly through either the LMT or the Supervision System.

ION-B modules are designed to exchange information, meaning that each RU can receive failure notifications from its external equipment through alarm connections. Moreover, the TFAx constantly monitors the optical signal received from its TFLN unit to control optical losses.

The following table shows a brief description of the possible alarms related to a RU, with reference to the corresponding alerted LEDs and to the actions to be carried out in case of a fault. Remote units can have a sub-set of the below alarms.

ALARM CODE (TSUN)	ALARM DESCRIPTION	ACTIVE LED	SUPERVISION PRIORITY LEVEL	ACTION RECOMMENDED	RELÉ PRIORITY LEVEL (subrack)
Antenna DC loop alarm	ALWAYS OK				
DL optical power fail[1]	The optical power received on the DL is too low and can not be compensated	RED	MAJOR	Check the DL fibre and the TFLN laser status	MAJOR
AGC out of range[1]	The optical power received is under the allowed 3dB optical loss but it can be compensated	NONE	WARNING	Clean optical connectors	MINOR
DL RF alarm in Band x (one for each RU band)	HW failure on the DL low band RF section	RED	CRITICAL	Return the unit	MAJOR
WiMax Synchronization Lost alarm	The synch signal is not present	RED	MAJOR	Check the master unit synch signal. If it is ok return the unit	MAJOR
External 1 alarm	Alarm on the device connected to alarm-contact 1	RED	MAJOR	Check external device or alarm connection	MAJOR
External 2 alarm	Alarm on the device connected to alarm-contact 2	RED	MAJOR	Check external device or alarm connection	MAJOR
Power supply alarm	UPS HW failure or malfunction. RF is turned OFF	RED	MAJOR	Check external PSU. If it works properly, replace the unit	MAJOR
Internal BUS alarm	A malfunctioning on the digital part involves a fault in monitoring functionalities	RED	CRITICAL	Return the unit	MAJOR
Sensor fail	An I^2CBUS failure may result in a wrong temperature reading	NONE	MINOR	Return the unit	MINOR
Temperature alarm	Over-temperature alarm	NONE	WARNING	Check ventilation and environment	MINOR

[1] See chapter *4.3.10 Automatic Gain Control (AGC)*

table 4-8 Remote Unit Alarms

As the table shows, minor alarms (low priority alarms) are indicated only by either the LMT or the Supervision System, and not through LEDs. Minor alarms detect critical situations which should be checked and tested in order to avoid future possible system faults.

The troubleshooting procedures are described in the following chapter and shown in Figure 4-101 Troubleshooting overview

4.13.2. Quick Troubleshooting

If the red LED is ON, please follow these steps:

1. Refer to Alarm Relay-Contact Troubleshooting section in order to discover whether or not the alarm is a result of external equipment failure.
2. If alarm-contact troubleshooting has not cleared any failures, clean the optical connectors.
3. If the problem still persists, refer to section to see if the optical cables or connections have any problems along the DL path.
4. If none of the previous actions served to switch off the LED, replace the unit with a new one or contact for assistance.

4.13.3. Alarm Relay-Contact Troubleshooting

This procedure should be considered if at least one TFAx alarm-contact is connected to any external equipment. If not, return to main troubleshooting procedure.

These steps aim to detect any failure inside external equipment or alarm-contact ports. If the alarm-contacts troubleshooting cannot clear any equipment malfunctions or port failures, then return to the main troubleshooting procedure.

For any alarm-contact that is connected to external equipment, follow these steps:

1. Disconnect it, and check the TFAx LED status after the disconnection.
2. If the red LED has switched off, any external equipment that is connected to the alarm-contact port is probably faulty. Please test it.
3. If the TFAx red LED still remains on after the disconnection, measure the voltage between the terminals of the alarm-contact port.
   a) If the terminals are electrically closed, the alarm-contact port is faulty. Contact the manufacturer for assistance.
   b) If the terminals are open, this means neither the analysis of the present alarm-contact nor the one of its external equipment has revealed failures. Re-connect the present alarm-contact port to its external equipment. If the TFAx has any other unchecked alarm-contacts connected to external equipment, apply the whole procedure (i.e. steps 1-3) to this port.

4.13.4. Fibre-Optic DL Troubleshooting

1. Check to see if there are any points in which fibres are experiencing a short radius of curvature. In these cases, rearrange the optical path in order to avoid sharp bends (if necessary, replace the optical cable with a longer one).
2. Check to see if SC-APC connectors are properly installed at both fibre ends. In case they are not, re-plug the SC-APC connectors to adapters.
3. Disconnect the optical fibre and clean it at both ends, then clean the SC-APC ports on both the TFLN and the RU. Re-connect the fibre to relevant ports after cleaning.
4. Disconnect the optical SC-APC connector from the Remote Unit's DL port, and measure the output power P_{OUT}(DL) at the corresponding fibre end. Then, go to the TFLN side, disconnect the optical SC-APC connector from the TFLN DL port and measure the input power P_{IN}(DL) coming out of the TFLN DL port. Calculate the DL fibre attenuation ADL as ADL [dB] = P_{IN}(DL) – P_{OUT}(DL):
   a) If ADL > 4dB, then there are problems with the fibre optic cable. Replace it with a new one.
   b) If ADL < 4dB, the troubleshooting procedure has not identified the problem. Refer to the Supervision System or contact assistance.

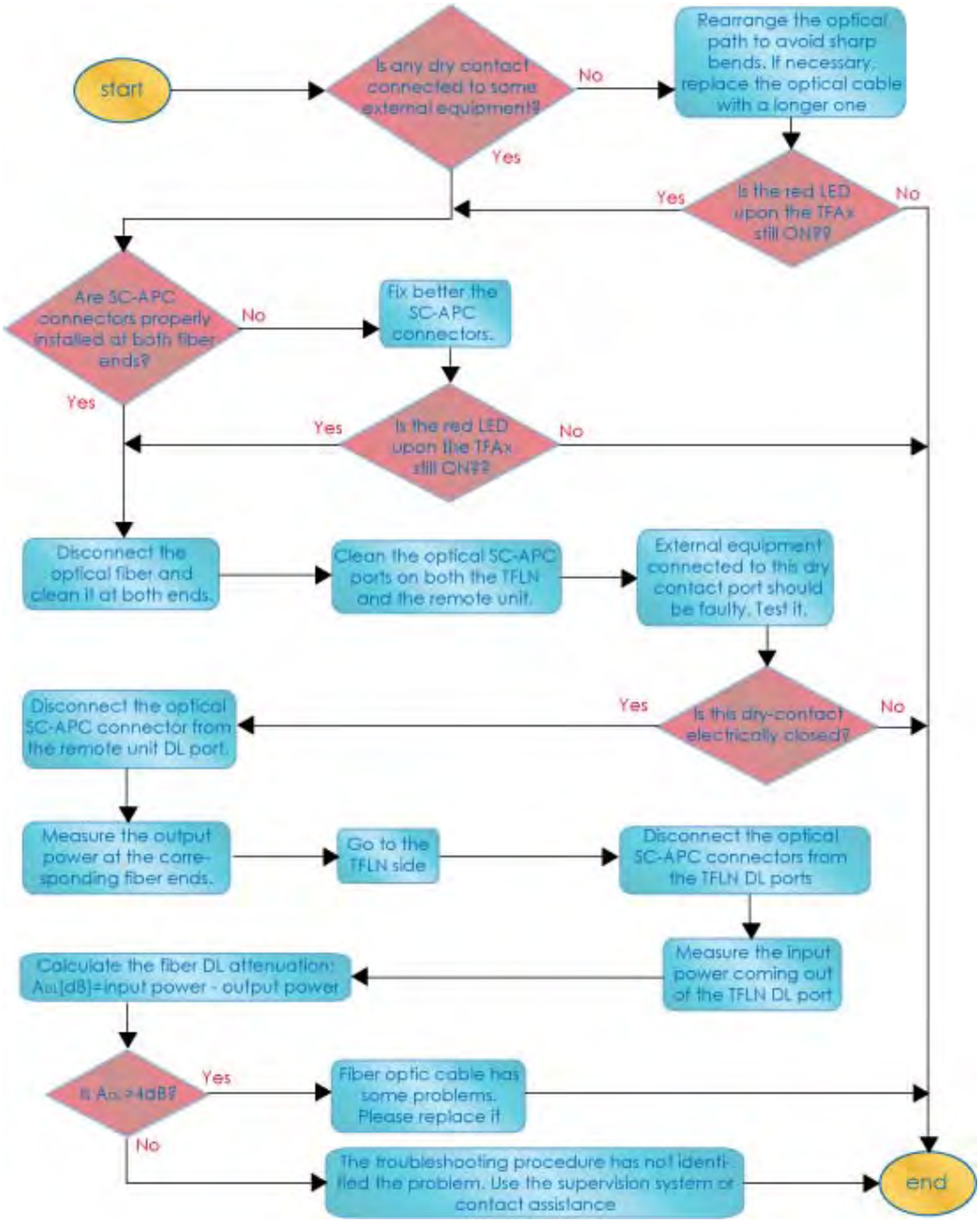

Figure 4-101 Troubleshooting overview

5. TFBX BOOSTER

5.1. THE MAIN TASKS OF THE TFBX BOOSTER

Downlink (DL):

- RF output power adjustment: to compensate the gain variation of the auxiliary channel
- RF amplification: RF signal are boosted in order to maintain a good signal-to-noise ratio
- RF filtering: a proper filter rejects the spurious emissions
- RF splitting: the boosted RF signal is conveyed to two antenna ports

Uplink (UL):

- Automatic Level Control (ALC): the RF signal level is adjusted according to blocking requirements
- RF amplification: a low noise amplifier boosts the signal received from antennas in order to maintain a good signal-to-noise ratio
- RF filtering: the boosted signal is cleaned of the spurious emissions

5.2. DIFFERENT TYPES OF BOOSTERS

To ease the system expansion to serve different bands, boosters can be connected to the auxiliary channel of the Remote Units.

Figure 5-1 Case B Booster	*Figure 5-2 Case R2 Booster*
Figure 5-3 Case U Booster	

Depending on the bands where radio coverage has to be provided and on the signal power required to cover the environment, the topology / case type of the booster will be determined.

Product Code	Case	RF Port	Power Supply	Bulletin Code
TFBM7	B	1 or 2 (dip switch)	TPSN1/28-80 TPSN3/28-80	PA-103494-EN
TFBM17	B	1 or 2 (dip switch)	TPSN1/28-80 TPSN3/28-80	PA-102073-EN
TFBM7/7	R2	2	TPSN1/28-80 TPSN3/28-80	PA-103794-EN
TFBH23/23	U	2	RPS150-Vac RPS150-Vdc	see Commscope eCatalog

table 5-1 Booster Reference Table

5.3. WARNINGS (TO BE READ BEFORE BOOSTERS ARE INSTALLED)

The warnings listed below refer to all boosters. Please read them carefully before starting the installation.

5.3.1. Choosing a Proper Installation Site for the booster

- TFBx booster have to be installed as close as possible to the Remote Unit and to the radiating antennas, in order to minimize coaxial cable length, thus reducing downlink power loss and uplink noise figures.
- When positioning the TFBx booster, be sure to place related antennas in such a way as to minimize the minimum coupling loss (MCL), in order to avoid blocking.
- The TFBx booster is designed to be fastened to walls, ceilings, or other flat surfaces (TKA installation kits are available; they provide a protective cover for the TFBx boosters, while making installation easier and faster).

5.3.2. Correct Positioning of the Booster and its Power Supply

- Under no circumstances should any component be affected by the heat created by any other one. The booster and its external power supply should be mounted so as to avoid reciprocal heating. Side-by-side configuration is suggested.
- Boosters are provided with cooling fins which allow the optimization of heat dissipation. To ensure proper operation the mounting environment should allow for the necessary air flow.
- It is strongly recommended not to mount the external power supply on a horizontal surface because this position does not allow heat dissipation. External power supplies must be mounted on vertical surfaces.
- In order to assure proper heat dissipation, external power supplies must be mounted in a vertical position with the power socket downwards.

5.3.3. Power Supply

The TFBx boosters are provided with different types of TPSN external power supplies (TFBH: internal power supply), available either for universal mains (90 to 264 Vac) or for negative supply (-60 to -36 Vdc). Different power ranges are available, see table 5-1 Booster Reference Table.

Figure 5-4 220 Vac/+28Vdc power adapter

5.4. CASE B BOOSTER

5.4.1. Specifications

Dimensions: 38 x 240 x 240 mm

(1.5 x 9.4 x 9.4 inches)

Weight: Please refer to the TFBM dedicated bulletin in order to discover any updated data regarding the weight of a specific Case B TFBx.

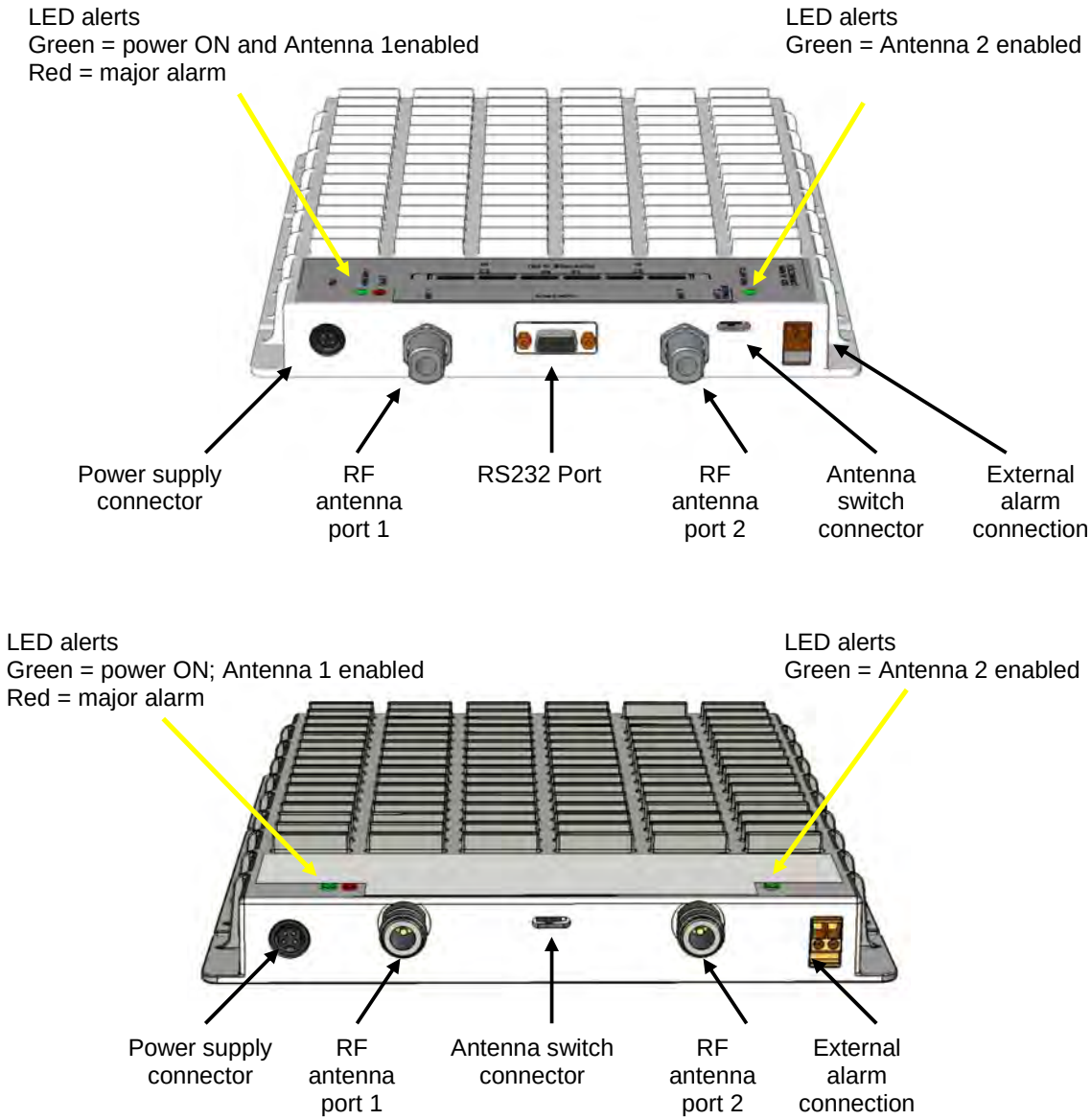

Figure 5-5 TFBx Case B Boosters, two different versions

RF ports

- 2 RF antenna ports, transmitting/receiving signals to/from distributed antennas. RF antenna ports are duplexed N-female connectors. These RF ports can be connected to the antennas either directly (i.e. through RF jumper cables) or through splitters, thus allowing more antennas to be fed. Unused RF ports have to be terminated with a 50 Ω load. They can be enabled/disabled through the dip-switch
- 2 RF ports (if applicable), accepting the Remote Unit antenna port as input and allowing internal combination of the signals of the Remote Unit to the booster antenna ports
- 1 RF auxiliary input and 1 RF auxiliary output (designed to receive and transmit signals to the Remote Unit). Auxiliary input and output ports are SMA-female connectors.

Dip switch

The case B booster is provided with a dip-switch which allows to enable/disable the second antenna port. In case the antenna port 2 is enabled, relevant green LED is switched on.

Alarm Relay Outputs

The TFBx is provided with two alarm relay outputs which can be cabled and connected to the Remote Unit's alarm relay inputs. This way, the alarm information of the booster pass to the Remote Unit itself and are signalled through the red LED of the TFAx and displayed in the supervision system.

Visual Alarms

Three control LEDs are provided on the TFBx case B front side. The left green LED indicates the power supply status and the antenna 1 enabled, while the red LED indicates any major booster failures (please refer to the respective troubleshooting section). The second green LED, on the right, indicates that the antenna 2 has been enabled through the dip-switch setting.

LED colour	Meaning
Red	Low optical power at DL input and/or RF amplifier failure
Green	Power supply OK, antenna 1 enabled
Green	Antenna 2 enabled

table 5-2 Status and Alarm LED Indication

5.4.2. TFBx Case B Installation

The case B TFBx can be mounted to wall or other flat surfaces.

The TFBx kit includes:

1. a Booster TFBx
2. an external power supply adapter
3. a power supply plug
4. a serial cable (if applicable)

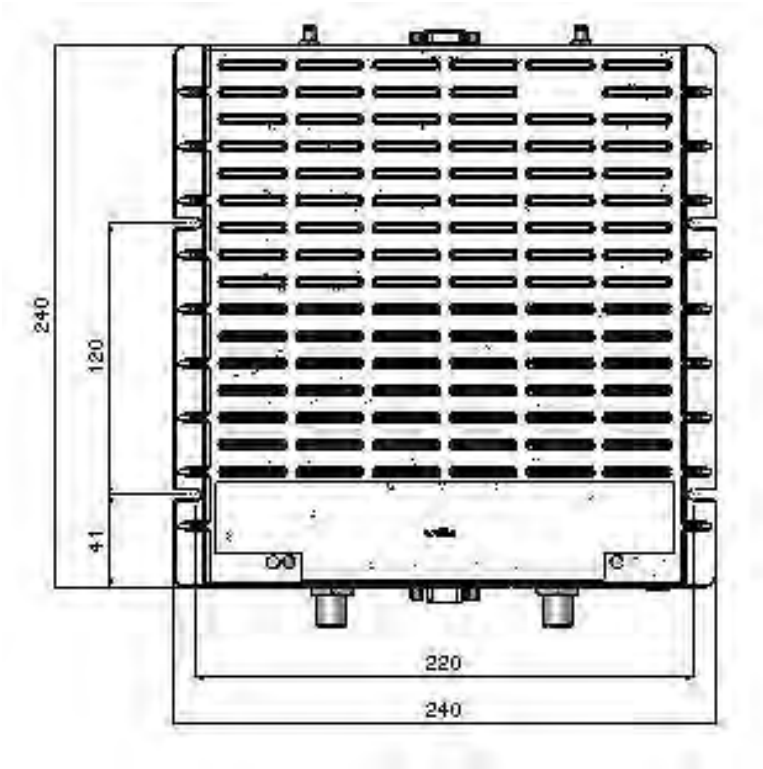

Figure 5-6 Case B layout with dimensions

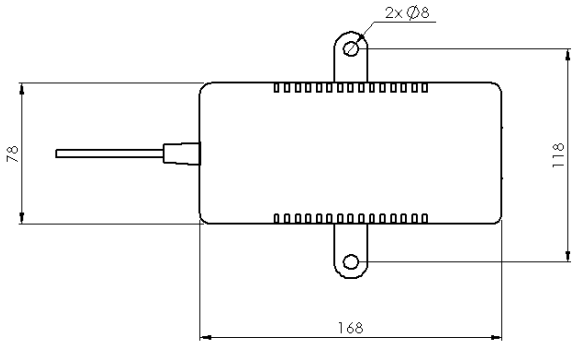

Figure 5-7 Layout of the power adapter with dimensions

Once you have chosen a location for the booster, please follow these instructions:

1. In order to install the M4 dowels (not included) which hold up the TFBx booster, drill four holes into the wall according to the layout shown in Figure 5-6 Case B layout with dimensions
2. Mount the TFBx to the wall by firmly fastening the screws into the dowels.
3. In order to install the M4 screw dowels (not included) which hold up the power supply external adapter, drill two holes into the wall according to the layout of the power supply, shown in Figure 5-7 Layout of the power adapter with dimensions.
4. Mount the external power supply to the wall by firmly fastening the screws.
5. Connect the RF auxiliary ports of the booster to the relevant ports of the Remote Unit
6. If applicable connect the antenna ports of the Remote Unit to the boosters inputs to have internal combination and common antenna's output
7. If applicable connect the RS232 port of the Remote Unit to the one of the booster through the RS232 cable provided.
8. Connect the external adapter to the TFBx Booster with the proper cable.
9. Use the dip-switch to choose between the one or two antenna port configuration for the booster

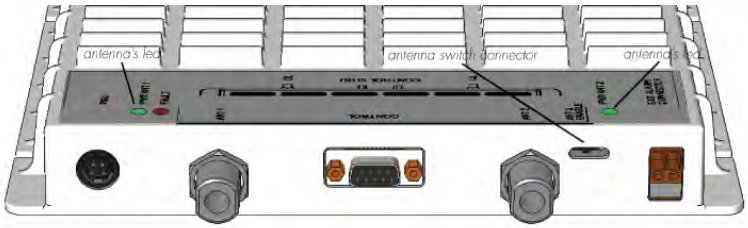

10. If needed cable the relay alarm outputs of the booster with the relay alarm inputs of the Remote Unit to have the booster supervised through the Remote Unit itself.
11. Once the installation is finished, please follow the 5.7 section in order to carry out a proper system start up.

5.5. CASE R2 BOOSTER

5.5.1. Specifications

Dimensions: 122.5 x 330 x 250 mm

(4.8 x 13 x 9.8 inches)

Weight: Please refer to the booster dedicated bulletin in order get updated data regarding the weight of a specific Case R2 booster

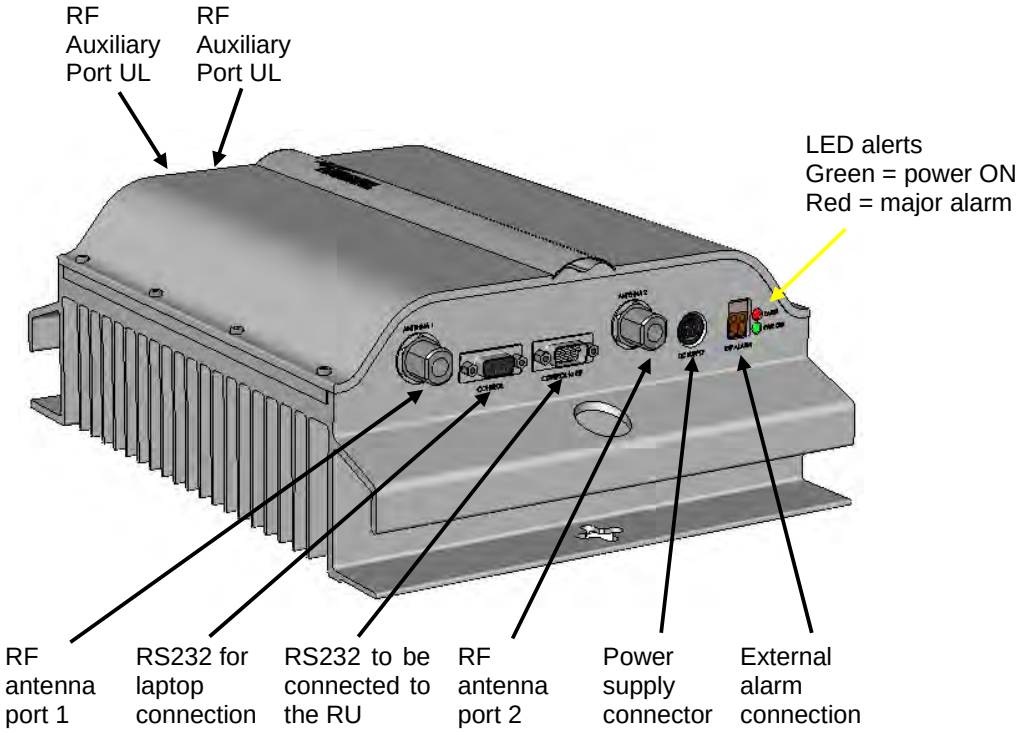

RF ports

- 2 RF antenna ports, transmitting/receiving signals to/from distributed antennas. RF antenna ports are duplexed N-female connectors. These RF ports can be connected to the antennas either directly (i.e. through RF jumper cables) or through splitters, thus allowing more antennas to be fed. Unused RF ports have to be terminated with a 50 Ω load.
- 1 RF auxiliary input and 1 RF auxiliary output (designed to receive and transmit signals to the Remote Units). Auxiliary input and output ports are SMA-female connectors.

Alarm Relay Outputs

The TFBx is provided with two alarm relay outputs which can be cabled and connected to the Remote Unit's alarm relay inputs. This way, the alarm information of the booster pass to the Remote Unit itself and are signalled through the red LED of the TFAx and displayed in the supervision system.

Visual Alarms

Two control LEDs are provided on the TFBx case R2 front side. The green LED indicates the power supply status, while the red LED indicates any major booster failures (please refer to the respective troubleshooting section).

LED colour	Meaning
Red	Low optical power at DL input and/or RF amplifier failure
Green	Power supply OK

table 5-3 Status and Alarm LED Indication

5.5.2. TFBx Case R2 Installation

The Case R2 Booster can be mounted to walls or other flat surfaces.

The TFBx kit includes:

1. a Booster TFBx
2. an external power supply adapter
3. a power supply plug
4. a serial cable

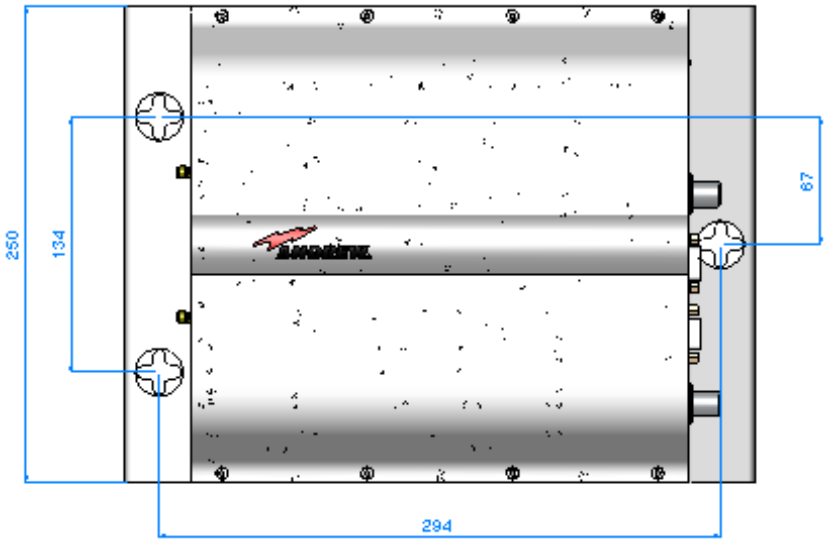

Figure 5-8 Case R2 layout with dimensions

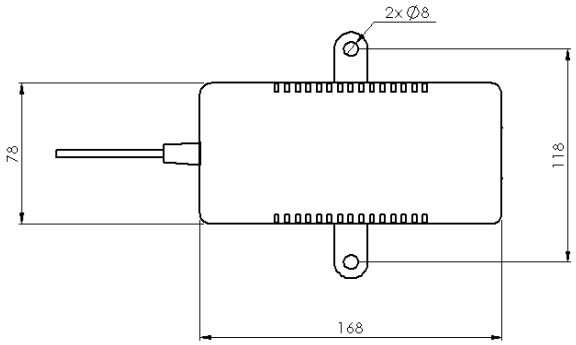

Figure 5-9 Layout of power adapter with dimensions

Once you have chosen a location for the booster, please follow these instructions:

1. In order to install the M6 dowels (not included) which hold up the TFBx booster and the power supply drill four holes into the wall according to the layout shown in Figure 5-8 Case R2 layout with dimensions and Figure 5-9 Layout of power adapter with dimensions.
2. Insert the M6 dowels into the holes and fasten the power supply to the wall. If you planned to use a common screw anchor to support both the booster and the external power supply, take care not to screw this dowels till you fastened the booster.
3. Fasten the booster to the wall and tighten the 4 dowels.
4. Connect the RF auxiliary ports of the booster to the relevant ports of the Remote Unit
5. Connect the RS232 port of the Remote Unit to the one of the booster through the RS232 cable provided.
6. Connect the external adapter to the TFBx Booster with the proper cable.
7. If needed cable the relay alarm outputs of the booster with the relay alarm inputs of the Remote Unit to have the booster supervised through the Remote Unit itself.
8. Once the installation is finished, please follow the 5.7 section in order to carry out a proper system start up.

5.6. CASE U BOOSTER

5.6.1. Specifications

Dimensions: 514 x 480 x 205 mm

(20.2 x 18.9 x 8 inches)

Weight: Please refer to the booster dedicated bulletin in order get updated data regarding the weight of a specific Case U booster

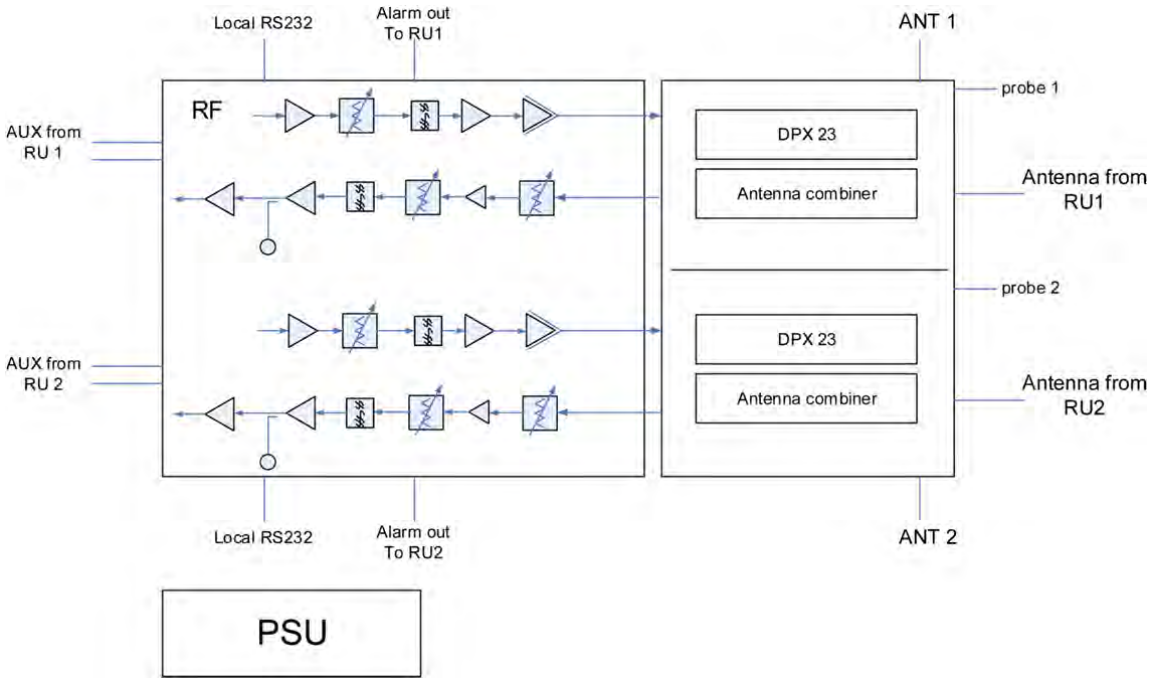

figure 5-10 Block diagram Case U booster

The RF, mains power, alarm, power control, and expansion ports are located on the bottom of the booster.

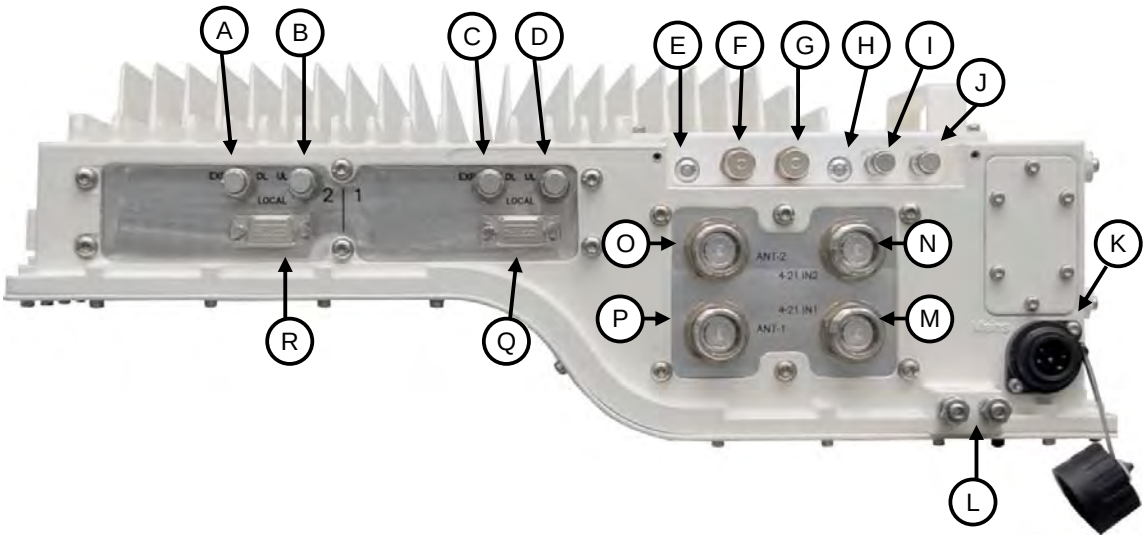

A	Expansion DL port path 2	J	Probe path 1
B	Expansion UL port path 2	K	Mains power connector
C	Expansion DL port path 1	L	Grounding (earthing) bolts
D	Expansion UL port path 1	M	RF antenna port 4-21 IN path 1
E	Status LED path 2	N	RF antenna port 4-21 IN path 2
F	Alarm connector 2	O	RF antenna port OUT path 2
G	Alarm connector 1	P	RF antenna port OUT path 1
H	Status LED path 1	Q	Local Port RS-232 path 1
I	Probe path 2	R	Local Port RS-232 path 2

figure 5-11 Booster connectors and Status LEDs

Antenna Ports OUT

The booster has two duplex 4.3-10 female antenna ports Ⓞ Ⓟ for transmitting and receiving signals to and from distributed antennas. These RF ports can be connected directly to antennas (i.e. using RF jumper cables) or through splitters, allowing additional antennas to be fed by the booster.

Antenna Ports IN

The booster has two duplex 4.3-10 female antenna ports Ⓜ Ⓝ for connecting the antenna OUT ports of two TFAx Remote Units. The signals are combined and fed to the RF antenna OUT ports of the booster.

Status LEDs

The status LEDs Ⓔ Ⓗ provide a visual warning of an alarm condition. The color of the LED indicates the severity of the alarm.

Expansion Ports

The Expansion UL Ⓑ Ⓓ and Expansion DL ports Ⓐ Ⓒ are QMA female connectors that are used to connect to two RUs to receive the additional bands. These ports must be terminated if not used.

Mains Connector

The booster receives its power through the Mains connector Ⓚ. The type of connector is dependent on the booster model. A 4-pin Amphenol connector is used for AC models and standard DC models. A 7-pin Amphenol connector is used for DC models powered by a dual cable supply.

Alarm Connector

The booster has two summary alarm relay outputs that can be used to connect to the corresponding TFAx external alarm inputs and monitor the status of the booster. The alarm connectors Ⓕ Ⓖ are 5-pin Binder connector.

Local Port RS-232

The RS-232 ports Ⓡ Ⓞ are standard DB-9 female connectors. They are local interfaces to the booster.

Probe Port

The probe ports Ⓘ Ⓙ are QMA measurement probes that allow the measurement of the antenna outputs without disconnecting the antennas. The coupling is as follows:

Port	Coupling dB typ.
2300 MHz	41.5

5.6.3. TFBx Case U applications

The TFBx with integrated antenna port combiner together with ION-B TFAx RU allows for further options.

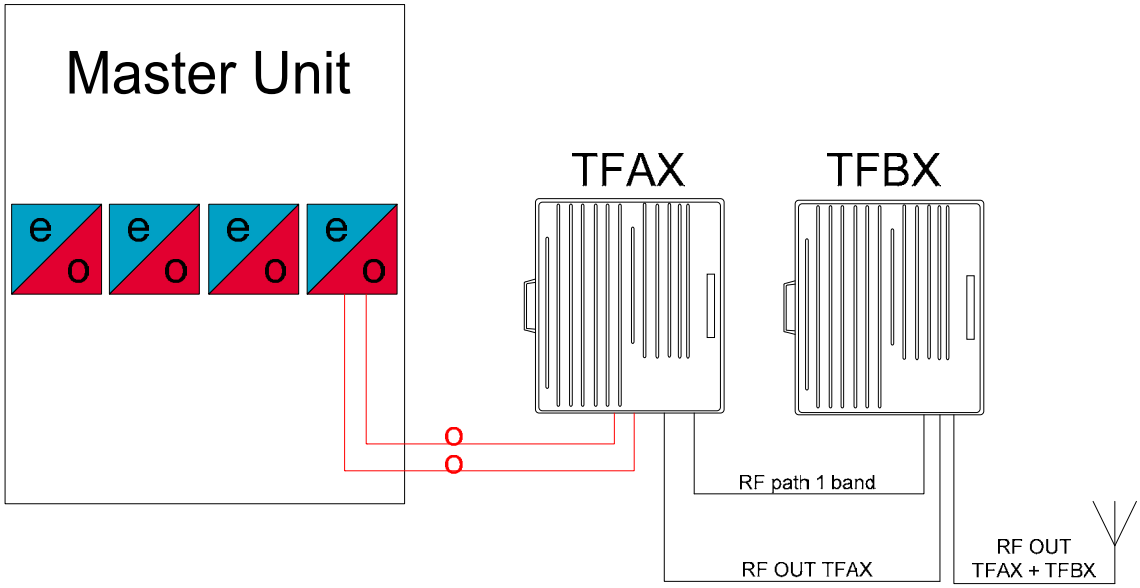

figure 5-12 One RU one booster one antenna

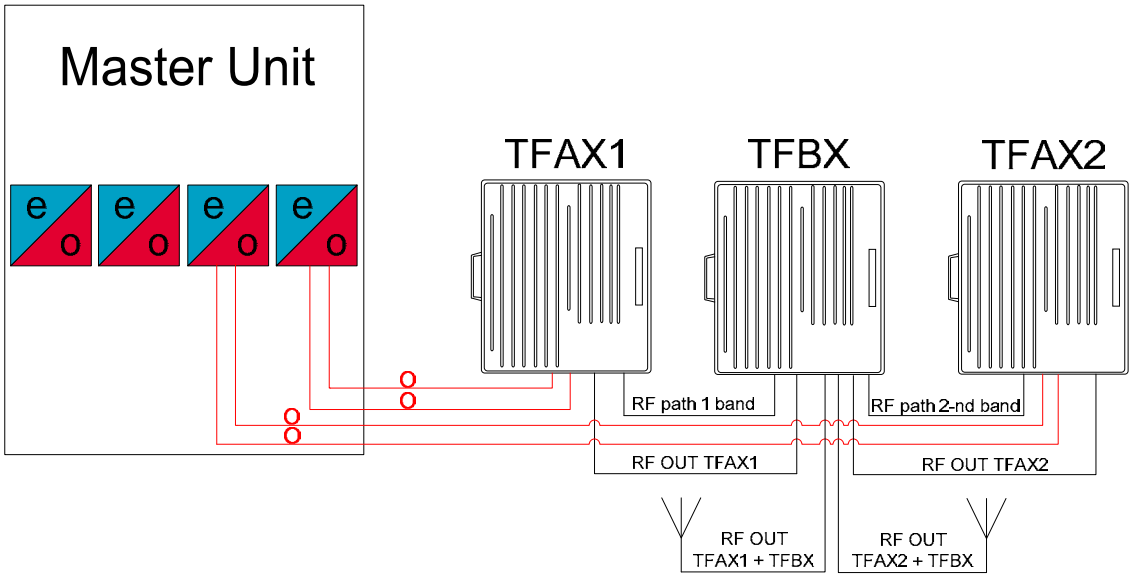

figure 5-13 Two RUs one booster two antennas

5.6.4. TFBx Case U Installation

Before the installation of the TFBx Case U booster read and observe chapters 4.10.2 and 4.10.3.

The mechanical installation of the TFBx Case U booster is identical to the installation of the TFAx Case U. For mounting the booster to a wall or pole see chapter 4.10.5.

The electrical installation of the TFBx Case U booster is almost identical to the installation of the TFAx Case U. For the electrical connection see chapter 4.10.7.
The differences in electrical installation are:

- the TFBx has got no optical connection, no fiber has to be connected to the booster
- the TFBx has got two alarm connectors for alarm connection to the two TFAxs, one for each TFAx
- the TFBx has got two antenna OUT ports for the connection of two antennas, one for each amplified band
- the TFBx has got two antenna IN ports for combining the RF signals from the TFAxs and the TFBx to the OUT ports of the TFBx, one for each TFAx; the cables (4.3-10 to N, 1.5 m) are part of the delivery
- the TFBx antenna port connectors are 4.3-10 female, not N female

5.6.5. TFBx Case U Power Supply Replacement

The replacement of the power supply unit is identical to the replacement of the power supply of the TFAx Case U. For replacing the power supply of an TFBx Case U see chapter 4.10.8.3.

5.7. TFBX BOOSTER START-UP

Before the TFBx booster is switched on, make sure that:

- the modules hosted in the Master Unit have been connected to each other with RF jumpers, according to the system design
- each TFLN Master optical TRX has been connected to its RU
- each booster has been connected to its Remote Unit (both RF and RS232 if applicable)
- each booster and Remote Unit has been connected to its coverage antennas

For a correct system start-up, all the RUs and boosters have to be switched on prior to the Master Unit.

Once the TFBx has been switched on, its behaviour can be summarized as per the following indicators:

1. When the booster is turned on, both LEDs turn on for a couple of seconds.
2. After that, the unit's green LED remains on (thus indicating proper power supply), while the red LED switches off.
3. If the booster is connected to the Remote Unit through the RS232 port, once the booster is switched on the red led of the Remote Unit blinks for a couple of seconds until the Remote Units gets all the information from the booster about possible band which needs shut down.

5.8. TROUBLESHOOTING

5.8.1. List of All Alarms

Errors are indicated by LEDs on the TFBx front panel, as well as by LMT or the Supervision System (running on the remote supervision unit) supposed that the relay alarms have been cabled.

The booster is not communicating the whole list of alarms, only the Remote Unit can alert (with the external alarm information) trough the LMT and the Supervision System that the booster has a wrong behaviour.

The following table shows a brief description of the possible alarms related to a booster, with reference to the corresponding alerted LEDs and to the actions to be carried out in case of a fault. Boosters can have a sub-set of the below alarms.

ALARM CODE	ALARM DESCRIPTION	ACTIVE LED	ACTION RECOMMENDED	RELÉ PRIORITY LEVEL (subrack)
DL ALC overpower	Power has increased the ALC range	RED	Check the RF power	MAJOR
Synchronism Fault	Synchronism has been loosen	RED	Check master unit and the fiber. If it works properly, replace the unit	MAJOR
PLL alarm	PLL is not locked to the frequency	RED	Return the unit	MAJOR
Power supply alarm	UPS HW failure or malfunction.	RED	Check external PSU. If it works properly, replace the unit	MAJOR

table 5-4 Booster's Alarm

The troubleshooting procedures are described in the following chapter.

5.8.2. Quick Troubleshooting

If the red LED is ON, please follow these steps:

1. Check the master unit to see if synchronism (if applicable) and RF power works properly
2. If it does not clear the failure, return the unit

6. RACK-BASED MASTER UNIT

6.1. TPRNX4 SUBRACK

6.1.1. Major TPRN Features

The TPRNx4 is a 19" subrack where all the ION-B plug-in modules can be inserted. ION-B equipment provides a wide variety of these subrack models differentiated according to power supply. Each one is provided with:

- 12 free slots, each with Height=4HE, Width=7TE
- Power supply 220 Vac or -48 Vdc
- Locally or remotely connectable through:
    a. RS232 serial port
    b. RS485 two-wire bus
    c. sub-D 15 pin male-connector
- Internal microcontroller for I2CBUS alarm collection
- Manual reset button, able to re-initialize both the inserted modules and the TPRN microcontroller
- Manual stand-by button, able to re-initialize the inserted modules, while keeping the TPRN microcontroller working.

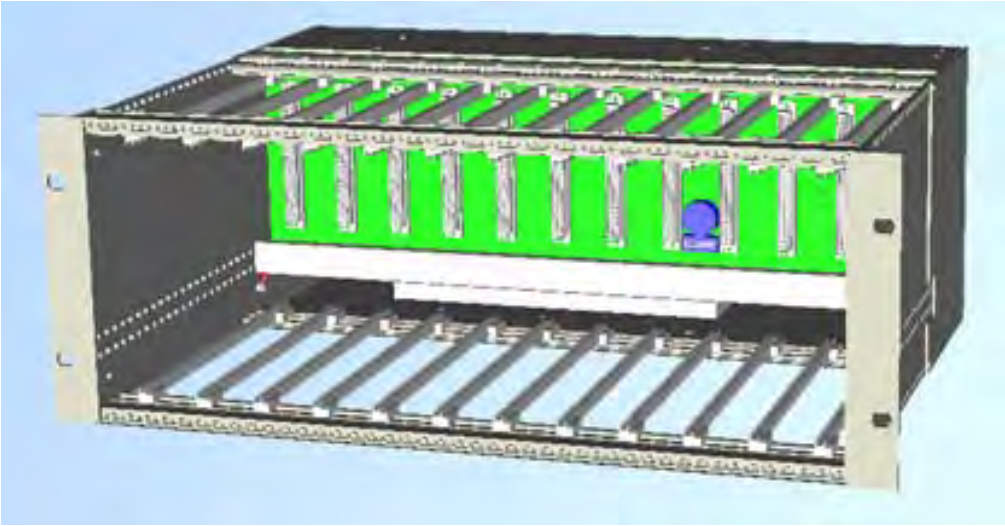

Figure 6-1 TPRN subrack

6.1.2. TPRN Models

All of the available TPRN subracks are described briefly on the following pages:

6.1.2.1. Passive subrack (TPRN04)

TPRN04 is a passive subrack. It cannot supply power to any inserted module, and therefore is designed to host passive modules only. It can be useful in a multi-subrack system, in case the customer decides to put all the active modules in an active subrack, to be chosen among the following:

6.1.2.2. 220 Vac powered subracks (TPRN14 / TPRN24)

TPRN14 is an active subrack designed to be fed through 220 Vac universal mains. Both the connector for the 220 Vac power supply and the communication ports are placed on the rear of subrack. The 220 Vac power supply is not redundant (ie, no spare adapter is provided).

TPRN24 is an active subrack designed to be fed through 220 Vac universal mains. Both the connector for the 220 Vac power supply and the communication ports are placed on the rear of subrack, and the 220 Vac power supply is redundant: i.e., a spare adapter guarantees the correct system operations even if the main 220Vac adapter has a breakdown.

6.1.2.3. -48Vdc powered subrack (TPRN34)

TPRN34 is an active subrack designed to be fed through a –48 Vdc negative supply. Both the connector for the -48Vdc power supply and the communication ports are placed on the rear of the subrack.

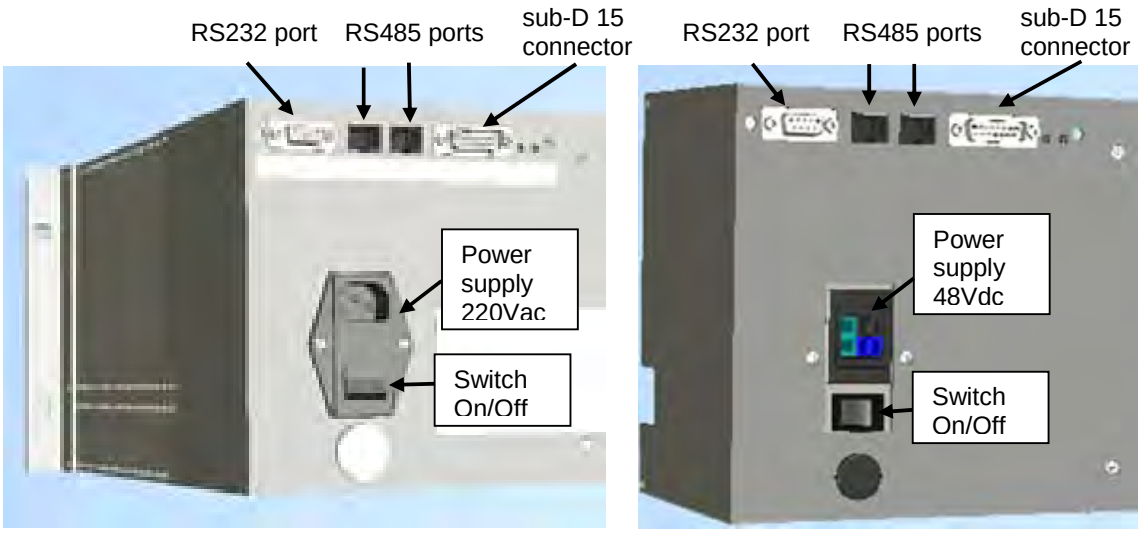

(a) (b)

Figure 6-2 Rear view of the TPRN subrack with 220Vac power supply (a) and with -48Vdc power supply (b)

6.1.3. TPRN Power Supply

All the TPRN models refer to one of the following power supplies:

Universal mains
(85 to 265Vac, 50/60Hz).

This connector is mounted on the TPRN back panel, both for the redundant version and the simple one. A ground terminal and a couple of fuses are also included. Fuses must be replaced in case of failure (if it happens, the failure is detected by the Supervision System).

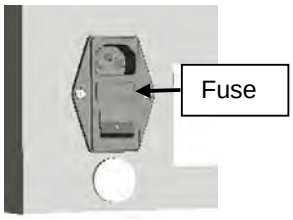

Figure 6-3 85 to 265Vac inlet

-48 Vdc
(-72 to -36 Vdc)

This connector is mounted on the back panel of the TPRN.

A fuse is provided underneath the -48 Vdc connector, and must be replaced in case of failure (if it happens, the failure is detected by the Supervision System).

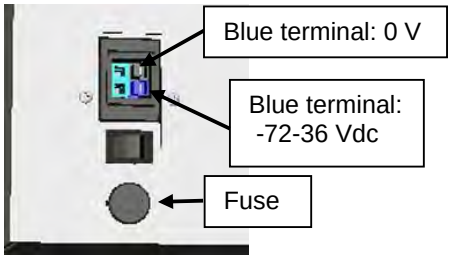

Figure 6-4 -48Vdc inlet

Whichever power supply is chosen (85 to 265 Vac or -72 to -36 Vdc) an additional external ground connector is provided on the rear of the TPRN.

The external power supply (220Vac or -48Vdc) is converted to a +12Vdc voltage, feeding the active modules inserted into the TPRN.

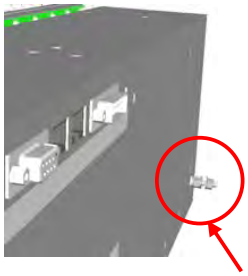

Figure 6-5 Ground connector

6.1.4. TPRN Ports

The TPRN subrack is provided with a set of I/0 ports which allows the connection to any external device.

6.1.4.1. RS232 serial port

The RS232 serial port can be used to connect the TPRN subrack to the remote supervision unit or to a laptop running LMT software. Please note that a standard RS232 cable is needed.

Baud rate (bps)	Dip-switch 5
9600	OFF
19200	ON

table 6-1 Setting the RS232 baud rate through the dip-switch 5

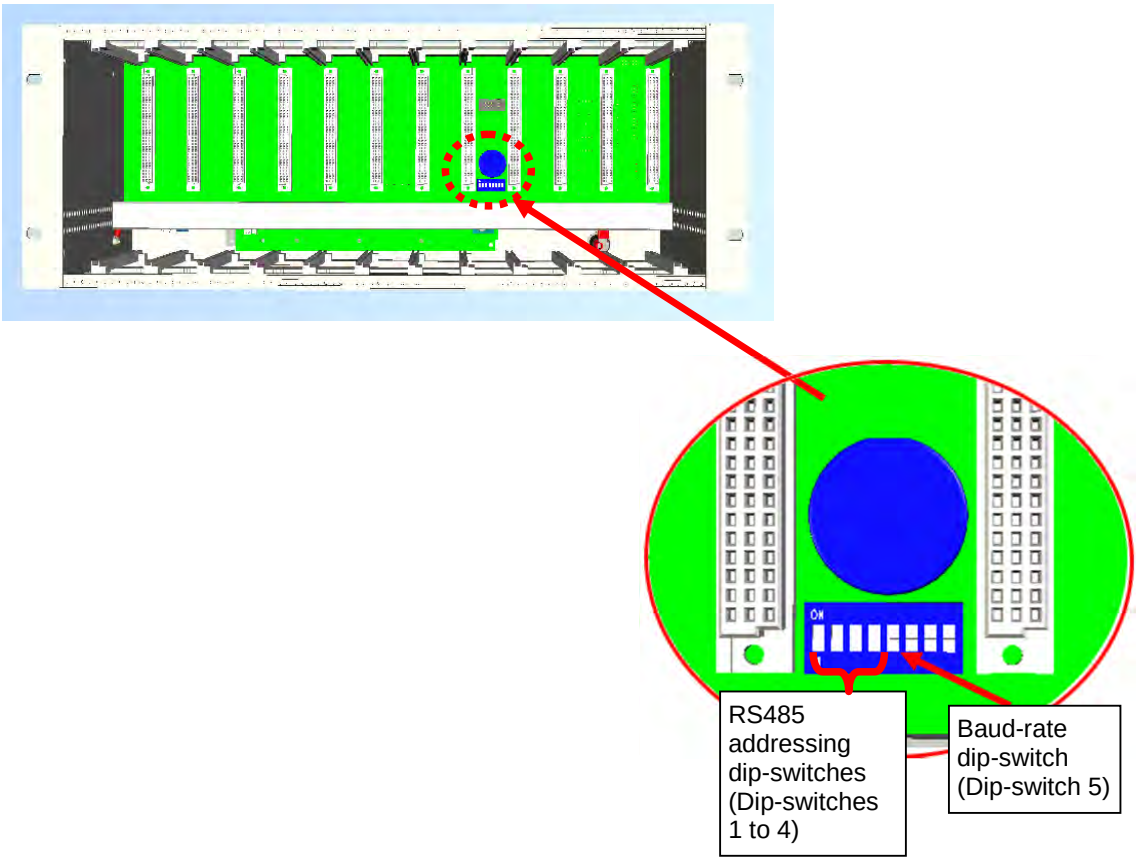

Figure 6-6 Dip-switches on the TPRN backplane

The connection baud rate can be set to 9600bps or 19200bps, by properly setting the dip-switch 5 standing on the interior TPRN backplane *(*Figure 6-6 Dip-switches on the TPRN backplane). The baud rate setting through dip-switch 5 is shown in table 6-1 Setting the RS232 baud rate through the dip-switch 5.

Whichever baud rate you choose through dip-switch 5, remember that:

- the same RS232 connection speed must be set up on the remote supervision unit
- the baud rate which is selected through the dip-switch 5 sets the connection speed for both the RS232 port and the RS485 port as the TPRN uses both ports with the same rate.

6.1.4.2. RS485 port

The RS485 port consists of two RJ45 connectors, which can both work as input or output ports towards a RS485 bus.

This RS485 bus has to be used in order to connect a multi subrack system to the remote supervision unit. In this case:

- the TPRN subracks have to be connected to one another via RS485 bus in a daisy chain;
- In order to monitor the whole system, the remote supervision unit has to be connected to one of the TPRN subracks through RS232 port.

Before connecting the TPRN subracks belonging to a multi-subrack system, remember to assign an exclusive binary address to each one. This is essential in order to allow the Supervision System recognize the different master units without any conflicts.

The binary address assignment can be done through dip-switches 1,2,3,4, which are on the interior TPRN backplane (see Figure 6-6 Dip-switches on the TPRN backplane). A list of correspondences between the addresses and the dip-switches is provided in table 6-2 Dip-switches address settings: simply note that dip-switch 1 is the least significant binary digit, while dip-switch 4 is the most significant one.

The baud rate of the RS485 ports is the same as the RS232 port as per the dip-switch 5 setting.

Whichever baud rate you choose, remember that:

- the same RS485 connection speed has to be set up on for the entire connected device (TPRN subracks or TSUN remote supervision unit);
- the baud-rate which is selected through the dip-switch 5 sets the connection speed for both the RS485 port and the RS232 port.

Address (Dec)	Address (Bin)	Dip-switch 1	Dip-switch 2	Dip-switch 3	Dip-switch 4
1	1	ON	OFF	OFF	OFF
2	10	OFF	ON	OFF	OFF
3	11	ON	ON	OFF	OFF
4	100	OFF	OFF	ON	OFF
5	101	ON	OFF	ON	OFF
6	110	OFF	ON	ON	OFF
7	111	ON	ON	ON	OFF
8	1000	OFF	OFF	OFF	ON
9	1001	ON	OFF	OFF	ON
10	1010	OFF	ON	OFF	ON
11	1011	ON	ON	OFF	ON
12	1100	OFF	OFF	ON	ON
13	1101	ON	OFF	ON	ON
14	1110	OFF	ON	ON	ON
Reserved	1111	ON	ON	ON	ON

table 6-2 Dip-switches address settings

6.1.4.3. Sub-D 15 poles male connector

The TPRN subrack provides sub-D 15 poles male connector, shown in Figure 6-7 Sub-D 15 poles male connector.

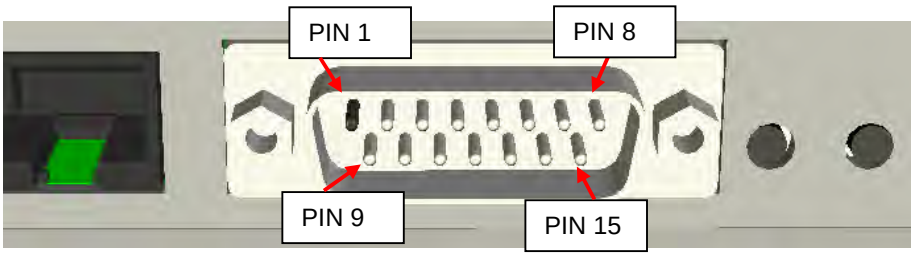

Figure 6-7 Sub-D 15 poles male connector

The pins are numbered from left to right, and from top to bottom (refer to Figure 6-7 Sub-D 15 poles male connector).

A more detailed description of the meaning and functionality of each pin is reported in table 6-3 Functional description of pins provided by sub-D male connector.

This connector provides:

- 4 opto-isolated input ports which can be used to reveal any failure condition on external equipment. The default status of these input ports can be defined through the Supervision System. After that, any change from default status will be revealed as a failure signal.
- a summary of major and minor alarms related to failures detected not only on the TPRN subrack, but also on any active modules hosted by the TPRN itself.

- 2 relay output ports, which be can used to drive any external device connected to subD-15 pins adapter. By using the Supervision System, each of these output ports be can set up in "open" or "close" modes.

PIN	Name	Meaning
1	Ground	It is a ground terminal for digital inputs, i.e. for pin 2, 3, 9, 10.
2	Digital input n.1 (SW assignable)	This port can be used to monitor external equipment status. Once a default working status has been assigned (through the Supervision System) to this input port, any change is detected as a failure signal.
3	Digital input n.2 (SW assignable)	This port can be used to monitor external equipment status. Once a default working status has been assigned (through the Supervision System) to this input port, any change is detected as a failure signal.
4	Disconnected pin	No meaning
5, 6	Summary of major alarms	These pins present an open circuit if a major alarm is active on the TPRN subrack or on any module hosted in it.
7, 8	Summary of minor alarms	These pins present an open circuit if a minor alarm is active on the TPRN subrack or on any module hosted in it.
9	Digital input n.3 (SW assignable)	This port can be used to monitor external equipment status. Once a default working status has been assigned (through the Supervision System) to this input port, any change is detected as a failure signal.
10	Digital input n.4 (SW assignable)	This port can be used to monitor external equipment status. Once a default working status has been assigned (through the Supervision System) to this input port, any change is detected as a failure signal.
11	Disconnected pin	No meaning
12, 13	Digital output n.1 (SW assignable)	These pins are terminals of an output port (output relay 1), which can be driven through the Supervision System. The output port can be set to "open" or "close" condition. These 2 statuses can be used to pilot any external device connected to subD-15 connector.
14, 15	Digital output n.2 (SW assignable)	These pins are terminals of an output port (output relay 2), which can be driven through the Supervision System. The output port can be set to "open" or "close" condition. These 2 statuses can be used to pilot any external device connected to subD-15 connector.

table 6-3 Functional description of pins provided by sub-D male connector

Note: **The TPRN subrack uses I2Cbus standard protocol to collect status and alarm information from hosted modules. Thanks to that, the alarm summaries (provided through pins 5-6 and 7-8) report major and minor failures related not only to the TPRN subrack but also to any hosted modules.**

6.1.5. TPRN Alarms

A full description of all TPRN alarms is provided by the Supervision System; The following table provides a brief description of the TPRN alarms, as they are reported by the LMT software.

TSUN Alarm Codedescription	Alarm Description	Active LED	Supervision Priority Level	Action Reco-mended	RELÉ Priority
Redundant supply active(only for redundant power supply versions)	Backup power supply activated	YEL-LOW	MAJOR	Return the unit	MINOR
Power Supply alarm	There is a degradation on the power supply provided to the boards	RED	MAJOR	Return the unit	MAJOR
I2CBUS bus error	Internal I2CBUS communication malfunction	YEL-LOW	CRITICAL	Check if the fault is on the unit (see Supervision System). If not, return the unit	MINOR
Temperature alarm	Over-temperature alarm	YEL-LOW	MINOR	Check ventilation and environment	MINOR
Aux input alarm nr0	The device connected to the input alarm port 0 caused an alarm condition	RED	CRITICAL	Check the status of the connected device	-
Aux input alarm nr1	The device connected to the input alarm port 1 caused an alarm condition	RED	MAJOR	Check the status of the connected device	-
Aux input alarm nr2	The device connected to the input alarm port 2 caused an alarm condition	RED	MINOR	Check the status of the connected device	-
Aux input alarm nr3	The device connected to the input alarm port 3 caused an alarm condition	RED	WARNING	Check the status of the connected device	-

table 6-4 Description of the alarms of the TPRN subrack

6.1.6. Warnings - recommended when designing or installing

6.1.6.1. Providing correct heat dissipation

For correct use of the TPRN subrack, it is important to verify that:

- the system is designed for no more than 8 TFLNs inside a TPRN subrack. This guarantees proper heating dissipation for the system. In case you want to install more than 8, it is important to provide the subrack with a proper ventilation system;
- active and passive modules should be alternated as much as possible inside the TPRN subrack avoiding too many active cards being inserted close together;
- in case the system consists of more than one TPRN subrack, a minimum distance of 1 HU has to be kept between nearby TPRN subracks to ensure proper heat dissipation. The rack containing the TPRN subracks has to be large enough to guarantee this correct distance between master units.

6.1.6.2. Minimizing equipment costs

In order to reduce the cost of ION-B equipment, a multi-subrack system should be designed according to the following guidelines:

- a passive subrack (TPRN04) may be used to house only passive modules;
- an active subrack (TPRN14, TPRN24, TPRN34) may be used to sustain all the active modules, and some of the passive ones (as stated above, it is advisable to alternate active and passive cards in an active subrack).

6.1.6.3. Setting the dip-switches in a multi subrack system

If you are installing a multi-subrack system, remember to assign each subrack an exclusive binary address, by properly setting dip-switches 1,2,3,4 on the interior TPRN backplane (see Figure 6-6 Dip-switches on the TPRN backplane and table 6-2 Dip-switches address settings). Dip-switch 5 has to be set on each TPRN subrack in order to fix the baud rate for the RS485 and RS232 ports. Connecting the TPRNs through the RS485 port is necessary when supervising the whole multi subrack system through the remote supervision unit (to be set at the same baud rate).

6.1.7. TPRN Installation

The TPRN kit provides:

- 1 TPRN subrack
- suitable power cord (a)
- 1 standard RJ45 cable (b)
- 1 standard RS232 cable (male-female), 2m (c)
- 1 CD Manual (d)

(a) suitable power cord cable

(b) standard RJ-45

(c) RS232 cable

(d) 1 Cd rom, including ION-B manuals

Figure 6-8 Some of the installation accessories provided with the TPRN subrack

Firstly, insert the subrack into the cabinet and apply 4 screws (not provided) in order to fix it.

To ensure correct TPRN installation, distance between the front door of the rack and the front side of the TPRN should be at least 15cm, otherwise the RF and optical cables could be damaged when cabinet door is closed.

Figure 6-9 Mounting holes of TPRN

Leave at least 1 HU distance between two subracks in order to facilitate air circulation. Leave at least a 1 HU free space between the bottom or the top of the cabinet and the TPRNs.	Intra-subrack distance must be at least 1 HU to allow air circulation. 1-HU inter-subrack distances can be properly filled through blind panels. 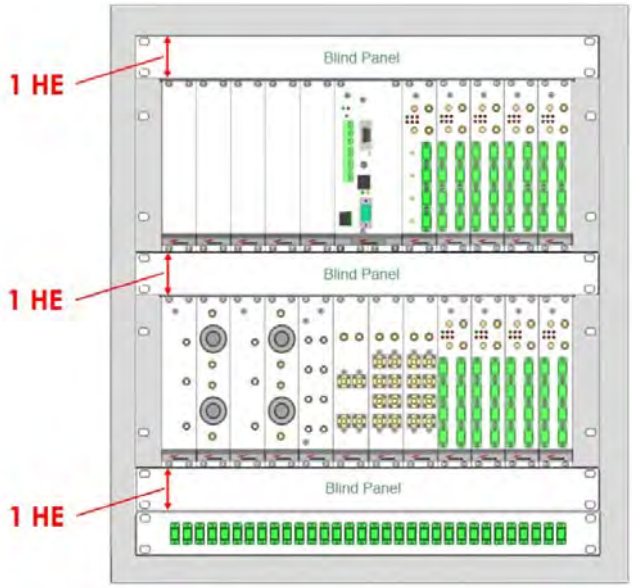 *Figure 6-10 Intra-subrack distance*
Connect the ground to the safety ground terminal. Then, connect the power supply connector to the mains.	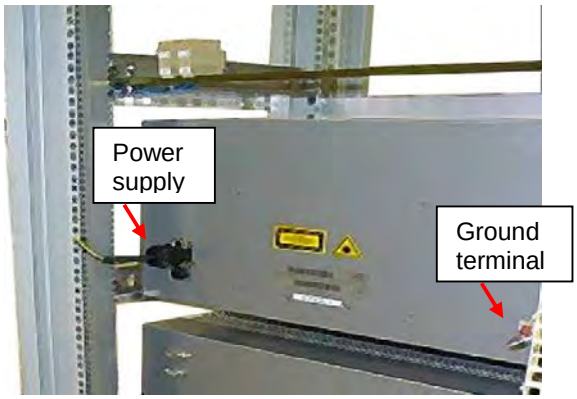 *Figure 6-11 Power supply and ground terminals on the rear side of the TPRN subrack*

6.1.8. TPRN Start-up

Before switching on the TPRN subrack, make sure that:

- all necessary modules have been inserted
- the modules have been connected to each other by RF jumpers, according to what has been planned during the system design
- each TFLN contained in the Master Unit has been connected to its TFAx Remote Units
- each TFAx Remote Unit has been connected to its coverage antennas
- the remote supervision unit (if present) has been connected or housed to the Master Unit
- different subracks have been connected to each other via bus RS485 and each of them has different addresses
- the rack housing the TPRN is large enough to leave a minimum distance of 1 HU between contiguous TPRN subracks

Remember that TFAx Remote Units have to be switched on before the relevant Master Unit.

Once the TPRN subrack has been switched on, the system behaviour can be summarized by the following steps:

- About 10sec after the TPRN subrack has been switched on, all TFLN modules housed in the TPRN itself begin a "discovery" phase in order to identify and collect status of the connected TFAx Remote Units. While the discovery phase is working (max. 4min. depending on the system complexity) each of the TFLN general alarms (i.e., LED " ") blink, whereas the other TFLN LEDs go on showing the detected status. Do not connect/disconnect any cable or piece of equipment until all TFLN modules have finished the discovery phase. This may result in failing to identify the TFAx. Regardless, during the discovery phase, the entire system continues to work correctly as the discovery process aims to collect information about the TFAx but without affecting basic system functionalities.
- Once the discovery has finished, the general alarms (i.e. the LED " ") on each TFLN panel stop blinking and switch OFF (provided that the TFLN master optical TRX is not affected by a general failure).

6.1.9. TPRN Troubleshooting

In case a TPRN subrack shows any problems, a more detailed status and alarm description is able to be provided through the remote supervision unit.

A complete overview of TPRN alarms is provided in table 6-4 Description of the alarms of the TPRN subrack.

A power supply degradation occurs in case the +12Vdc power falls below an in factory set threshold level. In this case, the TPRN automatically switches to standby mode so that no over-current is able to get through the circuitry of hosted modules, thus preserving the system's integrity. Once the power supply has been repaired, the TPRN needs to be rebooted. In case the TPRN subrack is equipped with a redundant power supply (TPRN24), a degradation of the +12 Vdc power results in an automatic switching from main to spare converter. In case a redundant power supply is degraded, the TPRN automatically turns to stand-by mode. Once the power supply has been repaired, the TPRN needs to be rebooted.

A I2Cbus alarm occurs when the TPRN subrack is not able to communicate with one or more of the hosted modules. Each TPRN slot is able to automatically detect the presence of a module inside the slot. If the module is detected but the TPRN is not able to communicate with it through the I2Cbus, an alarm is activated.

Note: **At commissioning, remember to mask the unused slots through LMT software (please refer to the relevant manual for more information) to avoid triggering insignificant alarms.**

Before carrying out any troubleshooting procedures, please check the LMT or Supervision System manuals.

6.2. FAST MINIRACK TPRF31

6.2.1. Major TPRF Features

The TPRF31 is a low-cost minirack (1HU x 19") which can host 2 ION-B single-slot cards, such as:

- 2 Master Optical TRX, thus being able to drive up to 8 ION-B Remote Units
- 1 Master Optical TRX (driving up to 4 ION-B Remote Units) and a proper ION-B card, working as Point-of-Interface (POI) towards the BTS.

External splitting-combining modules are optionally available, thus providing a complete solution for building simple and low-cost Distributed Antenna Systems.

Its installation-friendly brackets are suitable for both wall mounting and rack-mounting, thus making the installation of the ION-B Fast MiniRack easy and unobtrusive.

Thanks to its RS232 / RS485 bus, the TPRF31 Fast MiniRack can be fully integrated with any additional ION-B MiniRacks or standard racks, and managed through the full system supervision, using the ION-B standard supervision interface. Lastly, its external dry contacts and auxiliary inputs allow the Fast MiniRack to collect information about any external device, thus making it into a fully environment-embedded device.

Figure 6-12 Front view of the TPRF31 Fast MiniRack, both with free slots (a) and housing 2 TFLN master transceivers (b)

Figure 6-13 Rear view of the TPRF31 Fast MiniRack, powered -48 Vdc

6.2.2. On/Off Switch and Power Supply

The TPRF31 Fast MiniRack can be powered from -36 to -72 Vdc. A fuse is provided underneath the -48 Vdc connector, and must be replaced in case of failure (when it happens, the Supervision System will detect the failure).

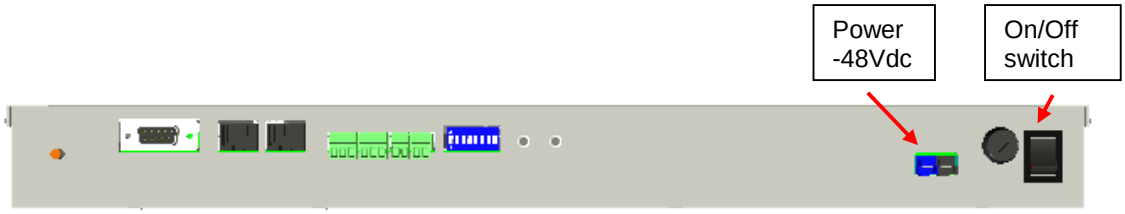

Figure 6-14 Rear view of the TPRF31 Fast MiniRack: Power supply connectors and On/Off switches

6.2.3. Reset and Store/Clear Buttons

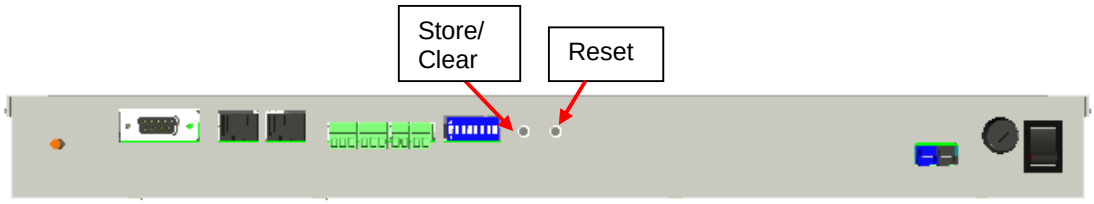

Figure 6-15 Rear view of the TPRF31 Fast MiniRack: Reset and Store/Clear buttons

Reset

The Reset button, located on the TPRF31 rear side, performs a complete reset of the Fast MiniRack, and is particularly useful when the MiniRack bus has become blocked in any way. Compared to the "manual reset" which can be perfomed by switching off and on the system through the On/Off switch, the Reset button is preferable because it does not cause any interruption in feeding the TPRF31.

Store/Clear

The Store/Clear button, located on the TPRF31 rear side, carries out a complete masking of the unused TPRF31 slots and of its TFLN ports. This operation should be carried out during the initial system installation, after all of the TFLN units which are hosted by the TPRF31 MiniRack have stopped blinking (i.e., after they have finished the discovery phase: see the TFLN section of this User Manual for further clarification).

The Store/Clear operation must also be carried out after any change affecting the TPRF slot configuration and the used ports on the TFLN transceivers.

When switching on and off the system in any other circumstances, no Store/Clear operation is normally required.

6.2.4. Visual Alarms

The TPRF31 front panel is provided with 2 LEDs, showing status and alarm information.

LED significances are provided in the following table.

Figure 6-16 TPRF31 visual alarms

LED colour	Significance
Red	Failure on the TPRF31, on one of the TFLN master transceivers, or on one of the connected Remote Units
Green	Power supply status OK

table 6-5 Meaning of the LEDs on the TPRF31 front-side

Further information about alarm status is delivered by the ION-B Supervision Systems.

6.2.5. TPRF31 Ports

The TPRF31 is provided with a series of ports which allow for the connection to any external device. These different ports are described hereinafter.

6.2.5.1. RS232 Serial Port

The RS232 serial port can be used to connect the TPRF minirack to the remote supervision unit or to a laptop running LMT software. Please note that a standard RS232 cable is needed.

The connection baud rate can be set to 9600 bps, 19200 bps, 57600 bps, or 115200 bps by properly setting the dip-switches 6 and 7 on the rear panel of the TPRF31 backplane (Figure 6-17 Dip-switches on the TPRF31 backplane). The baud rate setting using the dip-switches 6 and 7 is shown in table 6-6 Setting the RS232 baud-rate through dip-switches 6 and 7.

Baud Rate [bps]	Dip-switch 6	Dip-switch 7
9600	OFF	OFF
19200	ON	OFF
57600	OFF	ON
115200	ON	ON

table 6-6 Setting the RS232 baud-rate through dip-switches 6 and 7

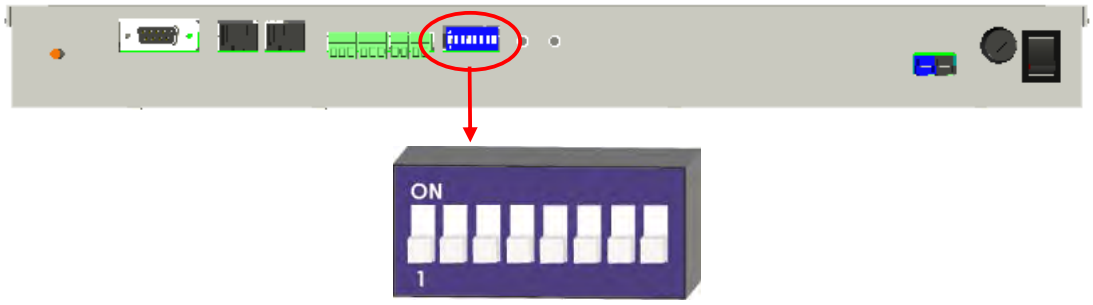

Figure 6-17 Dip-switches on the TPRF31 backplane

Whichever baud rate you choose by dip-switches 6 and 7, remember that:

- the same RS232 connection speed must be set up on the remote supervision unit
- the baud rate which is selected by the dip-switches 6 and 7 set the connection speed for both the RS232 port and the RS485 port as the TPRN uses both ports with the same rate

6.2.5.2. RS485 Port

The RS485 port consists of two RJ45 connectors, which can both work as input or output ports to and from a RS485 bus.

This RS485 bus has to be used in order to connect a multi subrack system to the remote supervision unit. In this case:

- the TPRF miniracks have to be connected to one another via an RS485 bus in a chain;
- in order to monitor the entire system, the remote supervision unit has to be connected to one of the TPRF miniracks via an RS232 port.

Before connecting the TPRF miniracks belonging to a multi-subrack system, remember to assign an exclusive binary address to each one. This is essential in order to let the Supervision System recognize the different master units without any conflict.

The binary address assignment can be done using dip-switches 1, 2, 3, 4, and 5, which are located at the backplane of the TPRF (see Figure 6-17 Dip-switches on the TPRF31 backplane). A list of the correspondences between the addresses and the dip-switches is provided in table 6-7 Dip-switches address settings: simply note that dip-switch 1 is the least significant binary digit, while dip-switch 5 is the most significant.

The baud rate of the RS485 ports is the same as the RS232 port as per the dip-switch 5 setting.

Whichever baud rate you choose, remember that:

- the same RS485 connection speed has to be set up on all connected devices (TPRF miniracks or TSUN remote supervision unit);
- the baud rate selected by dip-switches 6 and 7 sets the connection speed for both the RS485 port and the RS232 port.

Address (Dec)	Address (Bin)	Dip-switch 1	Dip-switch 2	Dip-switch 3	Dip-switch 4	Dip-switch 5
1	00001	ON	OFF	OFF	OFF	OFF
2	00010	OFF	ON	OFF	OFF	OFF
3	00011	ON	ON	OFF	OFF	OFF
4	00100	OFF	OFF	ON	OFF	OFF
5	00101	ON	OFF	ON	OFF	OFF
6	00110	OFF	ON	ON	OFF	OFF
7	00111	ON	ON	ON	OFF	OFF
8	01000	OFF	OFF	OFF	ON	OFF
9	01001	ON	OFF	OFF	ON	OFF
10	01010	OFF	ON	OFF	ON	OFF
11	01011	ON	ON	OFF	ON	OFF
12	01100	OFF	OFF	ON	ON	OFF
13	01101	ON	OFF	ON	ON	OFF
14	01110	OFF	ON	ON	ON	OFF
Reserved	01111	ON	ON	ON	ON	OFF
Reserved	10000	ON	OFF	OFF	OFF	ON
17	10001	ON	OFF	OFF	OFF	ON
18	10010	OFF	ON	OFF	OFF	ON
19	10011	ON	ON	OFF	OFF	ON
20	10100	OFF	OFF	ON	OFF	ON
21	10101	ON	OFF	ON	OFF	ON
22	10110	OFF	ON	ON	OFF	ON
23	10111	ON	ON	ON	OFF	ON
24	11000	OFF	OFF	OFF	ON	ON
25	11001	ON	OFF	OFF	ON	ON
26	11010	OFF	ON	OFF	ON	ON
27	11011	ON	ON	OFF	ON	ON
28	11100	OFF	OFF	ON	ON	ON
29	11101	ON	OFF	ON	ON	ON
30	11110	OFF	ON	ON	ON	ON
Reserved	11111	ON	ON	ON	ON	ON

table 6-7 Dip-switches address settings

Dip-switch 8 is used to match the impedance of a terminal TPRF31 node to the impedance of the transmission line being used. When the TPRF31 is the first or the last node of a subrack chain, dip-switch 8 can be set to ON if the length of the RS485 cables in the chain is such to cause a significant propagation delay, compared to the bit width (and therefore to the baud rate previously set).

In no such case, dip-switch 8 can be set to OFF.

485 Bus Termination Load	Dip-switch 8
Not connected	OFF
Connected	ON

table 6-8 Setting the 485 Bus termination load with dip-switch 8

6.2.5.3. Power Supplying Ports

The front side of the TPRF31 Fast MiniRack is provided with 4 power supplying ports, conveying the -48Vdc power supply to up to 4 ION-B Remote Units.

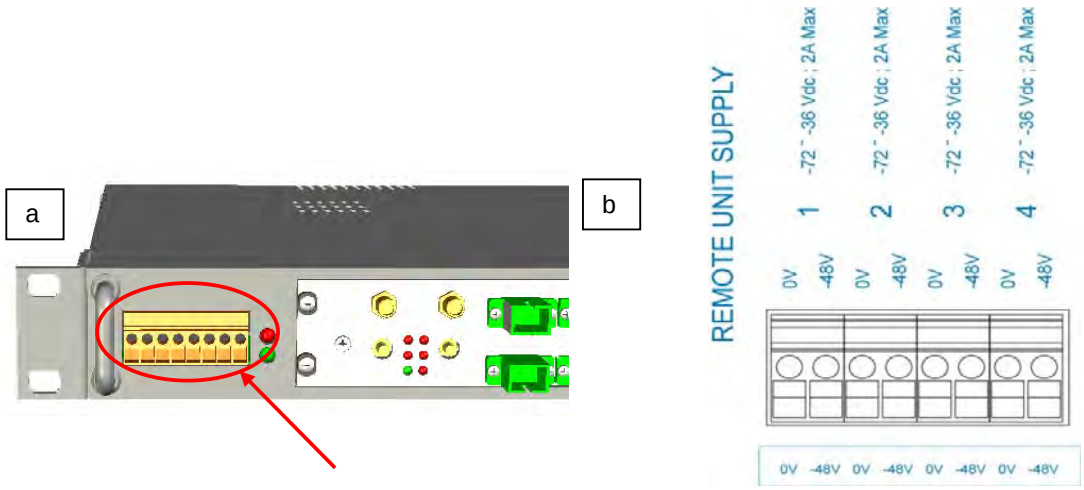

Figure 6-18 TPRF31 Power supplying ports on TPRF31 front side (a), Connection scheme of the power supply ports (b)

Please refer to relevant bulletin in order to check that the overall maximum power the TPRF31 provides to your Remote Units is below the overall maximum power supported by the unit.

6.2.5.4. Auxiliary Inputs

The rear side of the TPRF31 Fast MiniRack is provided with two auxiliary input alarms, allowing the monitoring of the alarm status (on/off) of any external device. The alarm status is able to be associated either with the open-circuit or the closed-circuit status by properly setting the TPRF31 page of the TSUN Supervision Interface.

Auxiliary input connectors are Phoenix Contact MC1,5-2-G-3.5 connectors working with typical current rating.

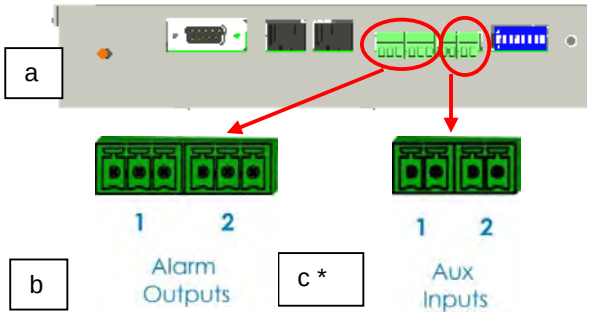

Figure 6-19 External Alarm Outputs (b) and Auxiliary Inputs (c) on the TPRF31 rear side (a)

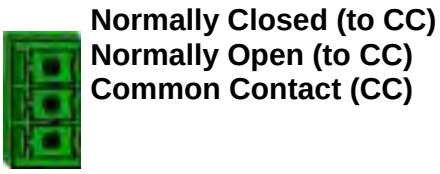

Figure 6-20 Description of the External Alarm Outputs

** Alarm Outputs 1 and 2 (c) refer to Major and Minor alarms, respectively*

6.2.5.5. External Alarms

The rear side of the TPRF31 Fast MiniRack is provided with two Alarm-output dry-contacts, which are able to provide alarm information about Major Alarms and Minor Alarms (see Figure 6-19 External Alarm Outputs (b) and Auxiliary Inputs (c) on the TPRF31 rear side (a)).

A full description of these Major and Minor Alarms is provided in table 6-9 Alarm information available through external alarm contacts.

External Alarm Outputs are Phoenix Contact MC1, 5-3-G-3.5 connectors.

Alarm Output N°	Description	Active Alarm	Severity
1	Major and Critical alarms	None	---
		I2CBus alarm	Critical
		Vcc	Major
		Slot 1 does not host a card and is not masked	Critical
		Slot 2 does not host a card and is not masked	Critical or Major
		At least one sub-system unit has a critical or major alarm	Major
2	Minor and Warning alarms	None	---
		Temperature	Warning
		At least one sub-system unit has a critical or major alarm	Minor or Warning

table 6-9 Alarm information available through external alarm contacts

6.2.6. Warnings - recommended when designing or installing

6.2.6.1. Installation site features

TPRF31 minirack for safety and security scopes, shall be installed on telecommunication rooms where there is a restricted access permission.

6.2.6.2. Providing correct heat dissipation

For correct use of the TPRF31 subrack, it is important to verify that:

- in case TPRF31 has been mounted in a vertical position (please refer to the "TPRF31 Installation" section) the power supplying ports (located on the TPRF31, front side, Figure 6-18 TPRF31 Power supplying ports on TPRF31 front side (a), Connection scheme of the power supply ports (b)) have been turned upwards.
- in case TPRF31 has been mounted on a rack (please refer to the TPRF31 Installation section), a minimum distance of 1 HE has been kept between nearby TPRF mini-racks to ensure proper heat dissipation.

6.2.6.3. Setting the dip-switches in a multi subrack system

If you are installing a multi-subrack system, remember to assign each subrack an exclusive binary address by properly setting dip-switches 1, 2, 3, 4, 5 on the TPRF31 backplane (see Figure 6-17 Dip-switches on the TPRF31 backplane and table 6-7 Dip-switches address settings). Dip-switch 5 has to be set on each TPRF minirack in order to fix the baud rate for the RS485 and RS232 ports.

Connecting the TPRFs through the RS485 port is necessary when supervising the whole multi subrack system via the remote supervision unit (to be set at the same baud rate).

6.2.6.4. Safety

When installing the TPRF31 mini-rack take care of the following safety issues:

- earth protection (screw on the rear panel) has to be provided before connecting the power supply cables
- an external disconnecting switch, presenting an overcurrent protection of 16 A max, shall be added
- the on/off switch on the rear panel does not disconnect the power supply to the Remote Units (front connectors, Figure 6-18 TPRF31 Power supplying ports on TPRF31 front side (a), Connection scheme of the power supply ports (b))

6.2.7. TPRF31 Installation

The TPRF31 installation accessory kit provides:

- 1 TPRF31 subrack
- 1 power supply cable (a)
- 1 standard RS232 cable (male-female)
- 2 Alarm-output connectors, 3-pole (b)
- 2 Auxiliary input connectors, 2-pole (c)
- 1 CD-rom, including ION-B manuals and tools (d)

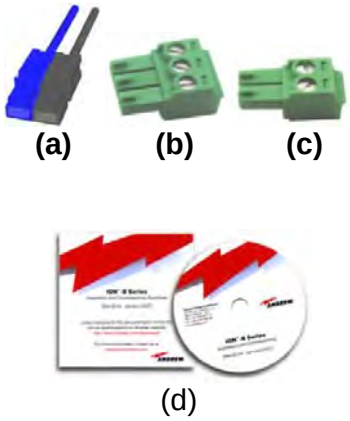

Figure 6-21 Some of the installation accessories provided with the TPRF31

The TPRF31 Fast MiniRack is provided with some reversible brackets and suitable both for rack-mounting and for wall-mounting.
Straight from the factory, the TPRF31 has brackets for rack-mounting which can be turned for wall mounting as described in the following section.

6.2.7.1. Mounting the TPRF31 in a rack

At first, insert the subrack into the cabinet, and fasten it with four screws.

To correctly install the TPRF31, the distance between the front door of the rack and the front side of the TPRF31 should be at least 15 cm, otherwise optical cables and (if present) RF cables might be damaged when the cabinet door is closed.

Leave at least 1 HU distance between the TPRF31 Fast MiniRack and any other subrack element, in order to facilitate air circulation.

Leave at least a 1 HU of free space between the bottom or the top of the cabinet and the TPRF31s.

Figure 6-22 Rack-mounted Fast MiniRack, configuration example

6.2.7.2. Mounting the TPRF31 to a wall

To adapt the rack-mounting brackets for wall mounting, proceed as follows:

Remove the brackets of the TPRF31 Fast MiniRack, starting from the factory configuration.

Figure 6-23 Removal of brackets

Turn the brackets.

Figure 6-24 Turning the brackets

Fasten the brackets properly.

Figure 6-25 Brackets adapted for wall-mounting

The TPRF31 Fast MiniRack is ready for wall-mounting.

Figure 6-26 Fast MiniRack adapted for wall-mounting

Drill four holes according to the mechanical layout in Figure 6-28 Mechanical layout for wall-mounting the TPRF31 Fast MiniRack
Insert the four dowels into the holes, then fasten the TPRF31 firmly to the wall by tightening the screws into the dowels.

Figure 6-27 Wall-mounted TPRF31 Fast MiniRack, hosting 2 TFLNs master unit transceivers

Note: **It is strongly suggested to mount the TPRF31 with the power supplying ports turned upwards.**

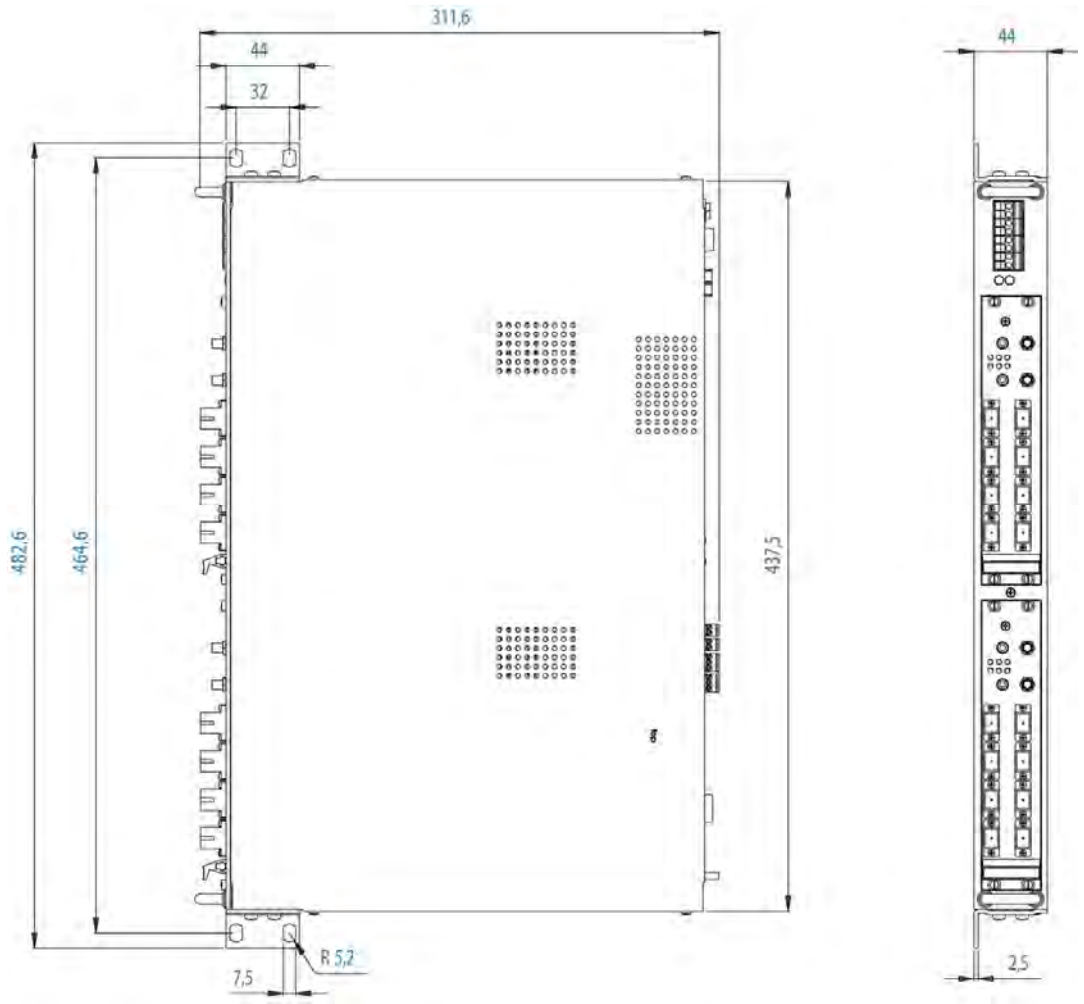

Figure 6-28 Mechanical layout for wall-mounting the TPRF31 Fast MiniRack

6.2.8. TPRF31 Start-Up

Before switching on the TPRF31 minirack, make sure that:

- all the expected modules have been inserted
- the modules have been connected to each other by RF jumpers, according to what has been planned during the system design
- every TFLN contained in the Master Unit has been connected to its TFAx Remote Units
- each TFAx Remote Unit has been connected to its coverage antennas
- the remote supervision unit (if present) has been connected or housed to the Master Unit
- different subracks have been connected to each other via an RS485 bus and each of them have different addresses
- the rack housing the TPRF31 is large enough to leave a minimum distance of 1 HU between contiguous TPRF31 subracks

Remember that TFAx Remote Units should be switched on before relevant Master Units.

Once the TPRF31 minirack has been switched on, the system behaviour can be summarized by the following steps:

- About 10sec after the TPRF31 minirack has been switched on, any TFLN modules housed in the TPRF itself begin a "discovery" phase in order to identify and collect the status of the connected TFAx Remote Units. While the discovery phase is proceeding (max. 4minutes depending on the system complexity) each TFLN general alarm (i.e., LED "┌┘") blinks, whereas the other TFLN LEDs go on showing the detected status.

  Do not connect/disconnect any cable or piece of equipment until all TFLN modules have finished the discovery phase. This may result in failing to identify the Remote Units. Nevertheless, during the discovery phase, the entire system continues to work correctly as the discovery process aims to collect information about the Remote Units without affecting basic system functionalities.

- Once discovery has finished, the general alarms (i.e. the LED "┌┘") on each TFLN panel stop blinking and switch OFF (provided that the TFLN master optical TRX is not affected by a general failure).

6.2.9. TPRF31 Troubleshooting

In case a TPRF31 minirack shows any problems, more detailed status and alarm descriptions can be provided via the remote supervision unit.

A complete overview of the TPRF31 alarms is reported in the following table.

Alarm code (TSUN description)	Alarm description	LED Colour	Severity	Alarm output **
Temperature	Over-temperature Alarm	-	Warning	2
I2CBus alarm	Internal I2Cbus communication malfunctioning	Red	Critical	1
Vcc	Power supply degradation, with internal voltage falling below critical threshold	Red	Major	1
Summary Slot 1	The TPRF31 slot 1 is not masked, in spite of not hosting any card	Red	Critical	1
Summary Slot 2	The TPRF31 slot 2 is not masked, in spite of not hosting any card	Red	Critical	1
Auxiliary Input 1	The auxiliary input 1 is in alert status *	Red	Major	1
Auxiliary Input 2	The auxiliary input 2 is in alert status *	-	Minor	2

* (Default alert status is "Closed", but can be set differently through TSUN Supervision unit)

** The "Alarm output" field indicates the number of the External Alarm Output through which the alarm information is revealed

table 6-10 Description of the alarms of the TPRF31 subrack

Please note that:

- The power supply degradation (Vcc) occurs in case the +12Vdc power falls below the critical threshold level. In this case, the TPR31 automatically turns to standby mode so that no over-current is able to get through the circuitry of hosted modules, thus switching off the active modules and preserving the system's integrity. As soon as the power supply voltage is restored to its standard level, the TPRF31 automatically turns on the active cards again. Should this not happen, press the Reset button (see Figure 6-15 Rear view of the TPRF31 Fast MiniRack: Reset and Store/Clear buttons).
- An I2Cbus alarm occurs when the TPRF31 minirack cannot communicate with one or more hosted modules. Each TPRF31 slot is able to automatically detect the presence of a module inside the slot. If a module is detected, but the TPRF31 is not able to communicate with it, the I2Cbus alarm is activated.

Note: **During the system commissioning, remember to mask the unused slots by pressing the Store/Clear button (Figure 6-15 Rear view of the TPRF31 Fast MiniRack: Reset and Store/Clear buttons) or via the LMT software (please refer to the relevant manual for more information) to avoid triggering insignificant alarms.**

Before carrying out any troubleshooting procedures, please check the LMT or Supervision System manuals.

6.3. MASTER OPTICAL TRX, TFLN

6.3.1. Main Tasks Carried Out by the TFLN Module

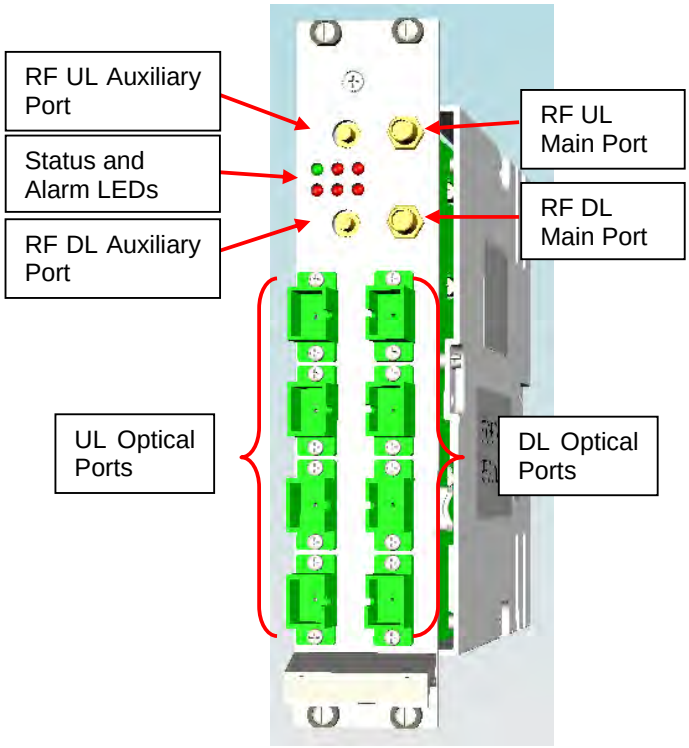

Figure 6-29 The TFLN Master Optical Transceiver

Downlink (DL)

- RF-to-optical conversion of the input RF signal
- Optical splitting: input RF signal is split onto 4 optical outputs

Uplink (UL)

- Optical-to-RF conversion of the 4 input optical signals
- Automatic Gain Control (AGC) of each converted signal to compensate optical losses;
- RF combining of the 4 adjusted signals into a single RF output

6.3.2. RF Ports

- 1 DL RF input port and 1 UL RF output port
- 1 auxiliary DL RF input port and 1 auxiliary UL RF output port

Note: **Nominal input levels required at RF ports is +10dBm (please refer to relevant bulletin for further information), as well as RF outputs may require a power adjustment to fill within the BTS receiving range.**

In order to fulfil these requirements, external UL and DL attenuations may be required.

6.3.3. Optical Ports

- 4 DL optical output ports (SC/APC)
- 4 UL optical input ports (SC/APC)

6.3.4. TFLN Visual Alarms

The TFLN front panel is provided with 6 LEDs (see right), showing status and alarm information.

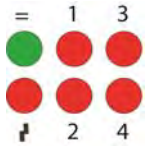

Figure 6-30 Visual alarms on the TFLN Master Optical Transceiver

LED significance is reported in the table below.

Label	LED colour	Significance
=	Green	Power supply status OK
┌┘	Red	General TFLN failure, it might be:- TFLN laser failure - UL or DL amplifier failure - TFLN short circuit
1	Red	Low UL optical power received from Remote Unit 1 (fault in optical link 1 or Remote Unit 1 failure)
2	Red	Low UL optical power received from Remote Unit 2 (fault in optical link 2 or Remote Unit 2 failure)
3	Red	Low UL optical power received from Remote Unit 3 (fault in optical link 3 or Remote Unit 3 failure)
4	Red	Low UL optical power received from Remote Unit 4 (fault in optical link 4 or Remote Unit 4 failure)

table 6-11 Visual alarms on the TFLN Master Optical Transceiver

Further information about alarm status is delivered by the ION-B Supervision System.

Note: **In case the four TFLN optical output ports are not all connected to Remote Units, the unused ports must be properly masked at commissioning in order to avoid spurious alarms (please refer to LMT manual).**

6.3.5. TFLN Power Supply

Each TFLN master optical TRX is supplied by the subrack backplane (12V).

6.3.6. Warnings - to be read before TFLN installation

6.3.6.1. Dealing with optical output ports

The TFLN master optical TRX contains semiconductor lasers. Invisible laser beams may be emitted from the optical output ports. Do not look towards the optical ports while equipment is switched on.

6.3.6.2. Handling optical connections

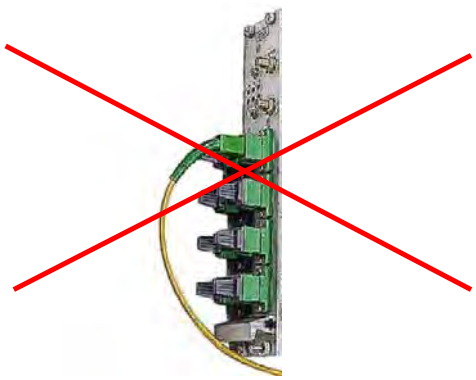

Figure 6-31 Wrong handling of fiber optical bending

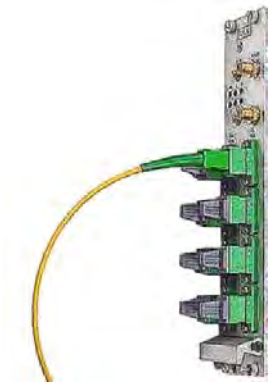

Figure 6-32 Correct handling of fiber optical bending

- When inserting an optical connector, take care to handle it in order not to damage the optical fibre. Optical fibres have to be single-mode (SM) 9.5/125µm.
- Typically, ION-B equipment is provided with SC-APC optical connectors. Inserting any other connector will result in severe damages.
- Do not force or stretch the fibre pigtail with a radius of curvature less than 5 cm. See Fig. 19 for optimal fibre cabling.
- Remove adapter caps only just before making connections. Do not leave SC-APC adapters open, as they attract dust. Unused SC-APC adapters must always be covered with their caps.
- Do not touch the adapter tip. Clean it thoroughly before inserting each connector into the sleeve. In case adapter tips need to be cleaned better, use pure ethyl alcohol

6.3.6.3. Inserting or removing TFLN modules

- Do not remove or insert any TFLN module into TPRN subrack before having switched off main power supply.
- The TFLN modules must be handled with care, in order to avoid damage to electrostatic sensitive devices.
- When installing TFLN modules in the subrack, take care to alternate active and passive cards in order to ensure proper heat dissipation.
- In a multi-subrack system, remember to assign to each subrack a proper RS485 bus address before installing the modules (please refer to Rack-Based Master Unit section for further details).

Figure 6-33 Installing a TFLN module

Figure 6-34 Proper cabling of SMA connectors on a TFLN front panel

TFLN Positioning

- In case no ventilation system has been installed, don't insert more than 8 TFLN modules into the subrack.
- In case more than 8 TFLN modules have to be housed in a TPRN subrack, it's advisable to install the TPRN subrack inside a rack with forced ventilation.
- Be careful to meet expected requirements for RF ports. An adjustable attenuator might be necessary if the power coming from the BTS exceeds the required levels, to avoid damaging the ION-B circuitry or an increase of spurious emissions.

Figure 6-35 Visual alarms on the TFLN Master Optical Transceiver.

6.3.7. TFLN Installation

The TFLN master optical TRX is housed in a TPRN subrack and its dimensions are 7 TE wide and 4HE high. A TFLN module is able to be accommodated in any of these 12 slots.

Note: **In case a new TFLN module has to be installed in a still working Master Unit, switch off the subrack before inserting the plug-in TFLN module.**

Firstly, gently insert the TFLN into one of the 12 available slots, and lock the 4 screws on the front corners.

Then, connect the UL and DL RF cable to the TFLN UL and DL ports, respectively.

Use an appropriate torque wrench to fix these RF cables to DL and UL ports.

Remove the caps from TFLN optical ports and connect the SC-APC fibre optic cables to the ports.

UL and DL cables coming from the same Remote Unit have to be connected to the UL and DL ports marked by the same number on the TFLN front panel.

As you switch on the system, carefully refer to the TFLN Start-Up section.

Remember that Remote Units should be switched on before the Master Unit in order to follow the correct Start-Up procedure.

Label	LED colour	Status
=	Green	ON (power supply is on)
┌┘	Red	OFF (no major failure affects TFLN operations)
1	Red	OFF (no major failure affects corresponding Remote Unit or UL connection)
2	Red	OFF (no major failure affects corresponding Remote Unit or UL connection)
3	Red	OFF (no major failure affects corresponding Remote Unit or UL connection)
4	Red	OFF (no major failure affects corresponding Remote Unit or UL connection)

table 6-12 LED alerts on the TFLN front panel

6.3.8. TFLN Start-Up

Before the Master Unit is switched on, make sure that:

- all necessary modules have been inserted into the Master Unit
- the modules have been connected each other by RF jumpers, according to what has been planned in the system design
- every TFLN master optical TRX has been connected to the relevant Remote Units
- each Remote Unit has been connected to its coverage antenna
- the remote supervision unit, if present, has been connected to the Master Unit
- different Master Units are connected to each other via bus RS485

Following this, the Master Unit itself can be turned on, making sure to turn on all the Remote Units first,

Once the Master Unit has been switched on, the behaviour of the TFLN at system start-up is able to be summarized with the following steps:

1. When the Master Unit is turned on, all six LEDs on the TFLN front panel remain lit for a couple of seconds. After that, the green LED remains lit (indicating proper power supply) while the other LEDs indicate the master optical TRX status, according to the following table.

Note: **If the unused optical ports of the TFLN haven't been masked through the LMT yet, corresponding LEDs will be lit. If this is the case, wait for the end of step 3 (discovery phase) then use the LMT to mask them (please refer to relevant manual).**

2. About 10 seconds after the system has been switched on, the TFLN module begins a "discovery" phase to identify all connected Remote Units. This operation serves to collect all necessary information to be provided to the Supervision System.

During the discovery phase, the TFLN general alarm (LED "┌┘") blinks while the other LEDs go on showing their previously detected status'. Time dedicated to the discovery phase could be up to a maximum of 4 min. and depends on system complexity.

Note: **Do not connect/disconnect any cable or any piece of equipment during the discovery phase. This may result in failing to identify Remote Units.**

Please note that, while the discovery phase is running, the whole system is working correctly as discovery operations aim only to collect information about Remote Units without affecting the system functionalities.

Note: **In case discovery doesn't start automatically, check the LMT or the remote supervision whether it has been disabled (refer to the LMT or remote Supervision System manuals for further information).**

Once the discovery is finished, the TFLN general alarm (LED "┘") stops blinking and switches OFF. The power supply LED (green) remains on while LEDs 1, 2, 3 and 4 show either the status of the Remote Units or the quality of the UL connections.

In case some of these LEDs remain on, check if they refer to unused optical ports or not. In this case, use LMT software to mask it. Otherwise, if they refer to connected Remote Units and remain on, please refer to the troubleshooting procedures.

6.3.9. Removing a TFLN Module

Switch off the Master Unit power supply, remove the SC-APC optical connectors, and insert the protection caps into the TFLN optical ports.

Then:

- unscrew the 4 screws and slowly remove the card
- put the removed TFLN card in its safety box
- switch the Master Unit power supply on again, and refer to the TFLN Start-Up section.

6.3.10. TFLN Troubleshooting

In case a TFLN master optical TRX has any problems, this will be easily revealed through the LEDs on its front panels, otherwise troubleshooting can be carried out through the LMT or the Supervision System.

LEDs on the TFLN front panel detect not only failures on the TFLN board itself, but also reveal malfunctions located on related Remote Units.

The below table reports a brief description of the TFLN alarms, together with a reference to the corresponding alerted LEDs.

As the table shows, LEDs on the TFLN front panel signal all high priority alarms while minor alarms, which detect critical situations which should be checked and tested in order to avoid future possible system faults, are only revealed by the LMT or the Supervision System.

Alarm Code (TSUN description)	Alarm description	Active LED	Supervision Priority Level	Action Recommended	Relé Priority Level
RX1 optical power fail	The optical power received on the UL1 is too low and can't no more be compensated	RED (LED1)	CRITICAL	Check the UL1 fibre and the Remote Unit laser status	MAJOR
RX1 AGC out of range	The optical power received is under the allowed 3dB optical loss but it can be compensated	NONE	MINOR	Clean optical connectors	MINOR
RX2 optical power fail	The optical power received on the UL2 is too low and can't no more be compensated	RED (LED2)	CRITICAL	Check the UL2 fibre and the Remote Unit laser status	MAJOR

Alarm Code (TSUN description)	Alarm description	Active LED	Supervision Priority Level	Action Recommended	Relé Priority Level
RX2 AGC out of range	The optical power received is under the allowed 3dB optical loss but it can be compensated	NONE	MINOR	Clean optical connectors	MINOR
RX3 optical power fail	The optical power received on the UL3 is too low and can't no more be compensated	RED (LED3)	CRITICAL	Check the UL3 fibre and the Remote Unit laser status	MAJOR
RX3 AGC out of range	The optical power received is under the allowed 3dB optical loss but it can be compensated	NONE	MINOR	Clean optical connectors	MINOR
RX4 optical power fail	The optical power received on the UL4 is too low and can't no more be compensated	RED (LED4)	CRITICAL	Check the UL4 fibre and the Remote Unit laser status	MAJOR
RX4 AGC out of range	The optical power received is under the allowed 3dB optical loss but it can be compensated	NONE	MINOR	Clean optical connectors	MINOR
Major Remote Unit 1	Alarm from RU1	RED (LED1)	-	Check Remote Unit status	MAJOR
Major Remote Unit 2	Alarm from RU2	RED (LED2)	-	Check Remote Unit status	MAJOR
Major Remote Unit 3	Alarm from RU3	RED (LED3)	-	Check Remote Unit status	MAJOR
Major Remote Unit 4	Alarm from RU4	RED (LED4)	-	Check Remote Unit status	MAJOR
DL laser alarm	A fault occurs on the DL laser	RED ( )	MAJOR	Return the unit	MAJOR
UL RF alarm	HW failure on the UL RF section	RED ( )	MAJOR	Return the unit	MAJOR
DL RF alarm	HW failure on the DL RF section	RED ( )	CRITICAL	Return the unit	MAJOR
Board failure alarm	General failure on board	RED ( )	MAJOR	Return the unit	MAJOR
Temperature alarm	Over-temperature alarm	NONE	MINOR	Check ventilation and environment	MINOR

table 6-13 LED alerts on the TFLN front panel

Each TFLN is provided with an AGC system which compensates optical losses of <3 dB. TFLN LED alarms switch on when the estimated optical losses are >4dB, when the AGC is not able to compensate these losses any more.

Figure 6-36 AGC thresholds vs LED alerts

One of LEDs,1, 2, 3 or 4, might turn on not only to indicate a high optical loss detected by the TFLN, but also to reveal a Remote Unit failure. Understanding the reason why one of LEDs 1, 2, 3 or 4 is on (a Remote Unit failure, an optical cable fault or an external equipment malfunction) can be done following the troubleshooting procedure reported hereinafter.

6.3.10.1. Quick Troubleshooting Procedure

The following procedure is summarized by the flow-chart in Figure 6-37 Flow-chart describing the quick troubleshooting procedure.

1. If the TFLN general alarm (LED "┌┘") is on, replace the faulty TFLN master optical TRX with a new one and contact the manufacturer for assistance.

2. In case one of the LEDs, 1, 2, 3 or 4, is lit, the corresponding TFLN adapter might be dirty. Try cleaning it using pure ethyl alcohol. If the LED is still lit, go to the corresponding Remote Unit side and check the red LED on the TFAx warm side:

   a. If it is off, the optical cables or the optical connections are supposed to have some problem on UL path. Refer to Fibre Optic UL Troubleshooting.

   b. If it is on, refer to Remote Unit troubleshooting presented in the previous Remote Unit section

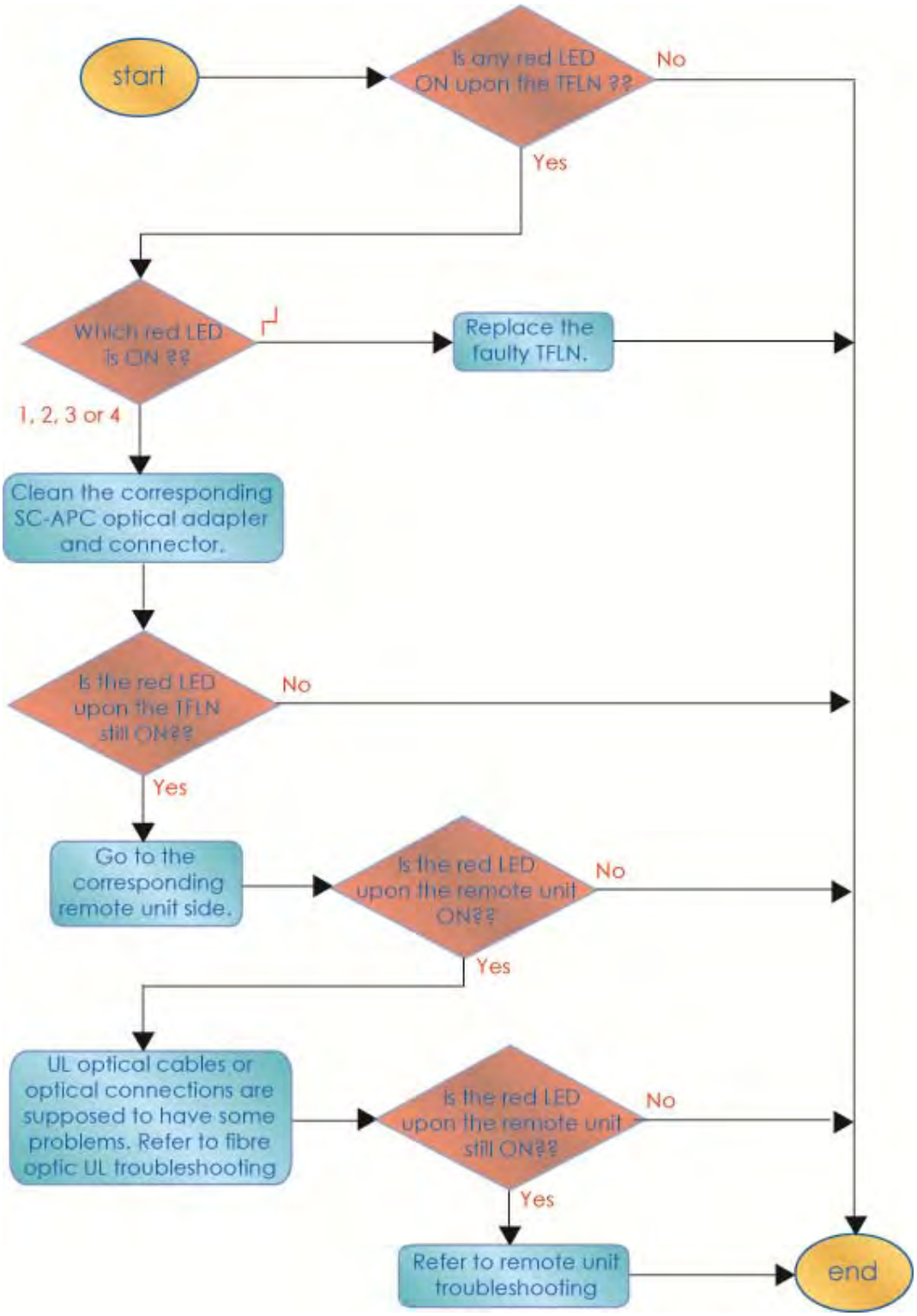

Figure 6-37 Flow-chart describing the quick troubleshooting procedure

6.3.10.2. Fibre Optic UL Troubleshooting

The following procedure is summarized by the flow-chart Figure 6-38 Flow-chart describing the quick troubleshooting procedure.

1. Check if there is any point where the fibre experiences a small radius of curvature. In this case, rearrange the optical path in order to avoid sharp bends (if necessary, replace the optical cable with a longer one). If this causes the TFLN red LED to switch off, troubleshooting has been successful. Otherwise, follow this next step.

2. Check if the SC-APC connectors are properly installed at both fibre ends (i.e. TFLN and TFAx ports). If not, fix the SC-SPC connectors better to their relevant adapters. If this causes the TFLN red LED to switch off, troubleshooting has been successful. Otherwise, follow this next step.

3. Disconnect the optical fibre and clean it at both fibre ends (i.e. TFLN side and TFAx side) then reconnect the fibre to relevant ports. In case this causes the TFLN red LED to switch off, troubleshooting has been successful. Otherwise, follow the next step.

4. Disconnect the optical SC-APC connector from TFLN UL port, and measure the output power POUT(UL) at the corresponding fibre end. Then, go to the TFAx side, disconnect the optical SC-APC connector from TFAx UL port and measure the input power PIN(UL) coming out of the TFAx UL port.

5. Calculate the UL fibre attenuation AUL as: AUL [dB] = PIN(UL) – POUT(UL)

    a. If AUL > 4dB, the fibre optic cable has some problems or the cable path is too long. Replace it.

    b. If AUL < 4dB, then the TFAx Remote Unit could be faulty. Before replacing it, check the TFAx status on the Supervision System and contact for assistance

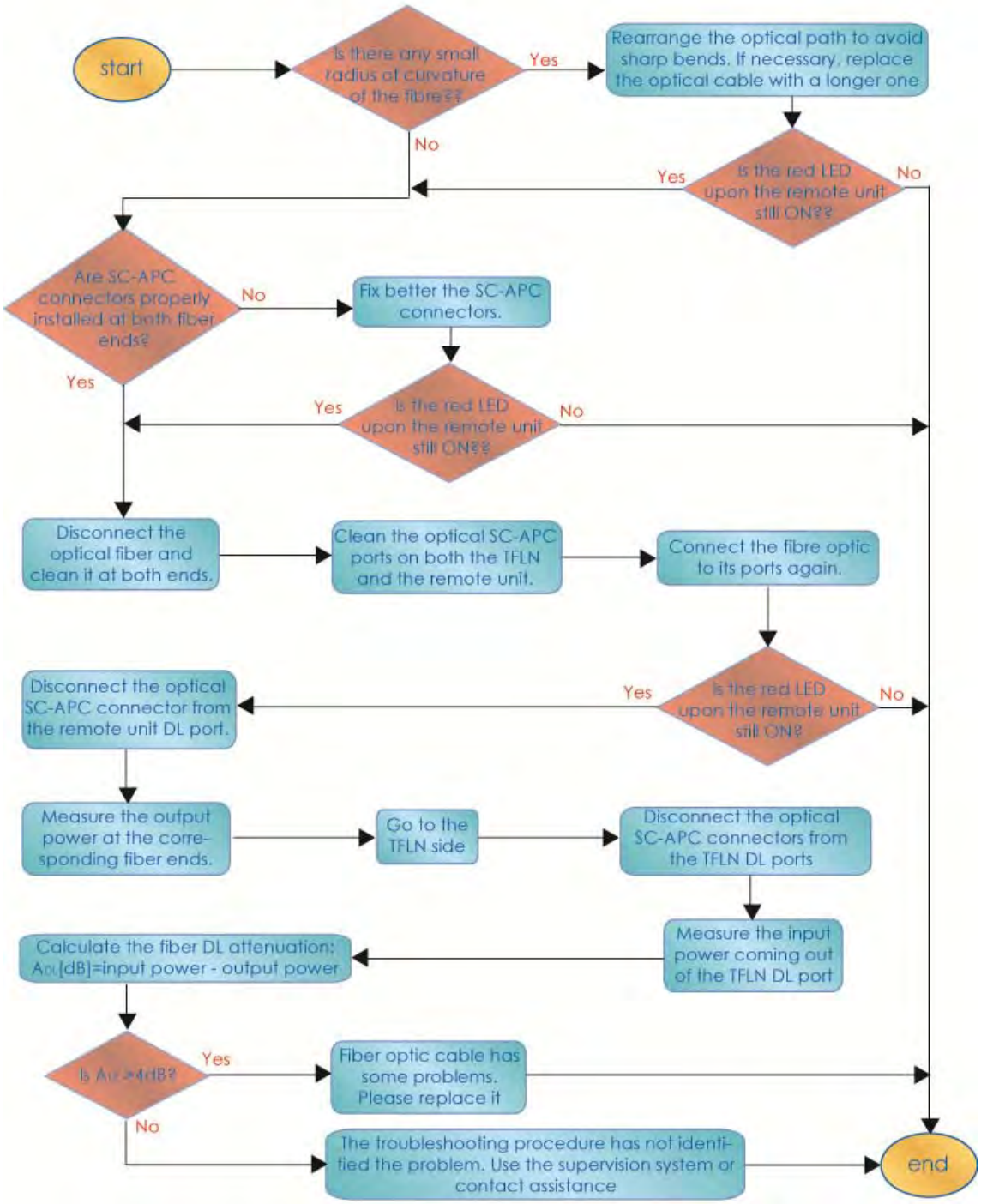

Figure 6-38 Flow-chart describing the quick troubleshooting procedure

6.4. TWO-WAY SPLITTER/COMBINER, TLCN2-W

6.4.1. Description

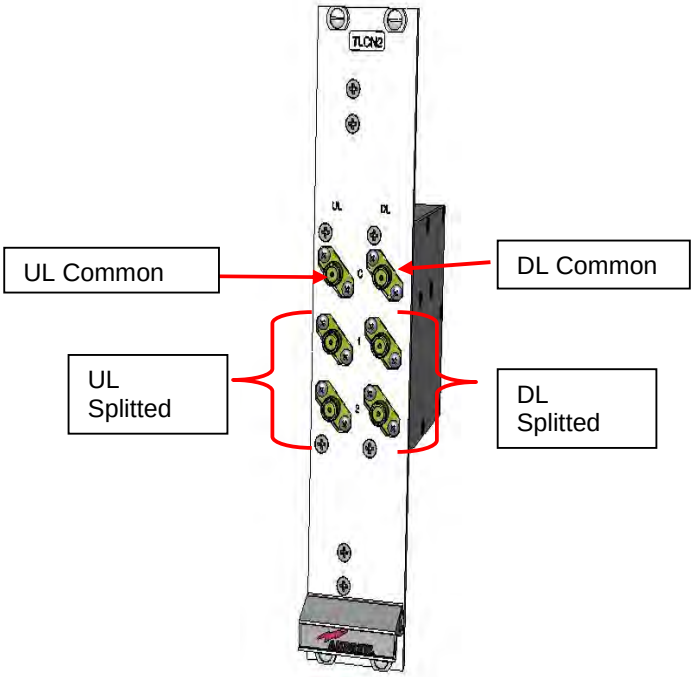

Figure 6-39 TLCN2-W splitter/combiner

The TLCN2-W, a bidirectional 2-way splitter/combiner, provides two identical combining sections for UL and DL which can be used in the following ways:

- to combine 2 RF signals into a common RF output
- to split an RF input into 2 RF output signals

It is a passive wideband module

6.4.2. RF Ports

- 1 DL common RF port ("C")
- 2 DL split RF ports ("1","2")
- 1 UL common RF port ("C")
- 2 UL split RF ports ("1","2")

Note: Each port is bidirectional.

6.4.3. TLCN2-W Main Applications

The main applications of the TLCN2-W module are:

- Connecting a donor source to more than one TFLN master optical TRX, so that:
  - TLCN2-W splits the DL input coming from a donor source into 2 output signals entering 2 different TFLN master optical TRXs
  - TLCN2-W combines the UL inputs coming from 2 TFLN master optical TRXs into 1 common signal entering the donor source
- Connecting a TFLN master optical TRX to more than one donor source within the same service, so that:
  - TLCN2-W combines the two DL inputs coming from 2 donor sources into 1 output signal entering the TFLN master optical TRX or a cross band coupler
  - TLCN2-W splits the UL input coming from TFLN master optical TRX or a cross band coupler into 2 different output signals entering 2 different donor sources.

More TLCN2-W modules can be used in cascade connections.

6.4.4. TLCN2-W-W Insertion Loss

The TLCN2-W insertion loss varies slightly depending on the frequency bands, check relevant bulleting for the values

6.4.5. Warnings

The overall input power must not exceed +30dBm when combining and +33dBm when splitting.

6.4.6. TLCN2-W Installation

Since the TLCN2-W module doesn't require any power supply, it can be housed either in an active or a passive TPRN subrack.

1. Unpack the kit which includes: 1 TLCN2-W
   4 RF jumpers (SMA-m), 2 x 25cm, 2 x 35cm
2. Carefully insert the TLCN2-W module into any of the TPRN subrack slots and lock the four screws on the front corners.
3. Connect RF cables to the UL and DL ports, according to what has been planned by the designer. Use an appropriate torque wrench to fasten each cable to its relevant ports.
4. In case some ports remain unused, remember to connect them to a 50Ω load (not included)

6.5. EIGHT-WAY SPLITTER/COMBINER, TLCN8-W

6.5.1. Description

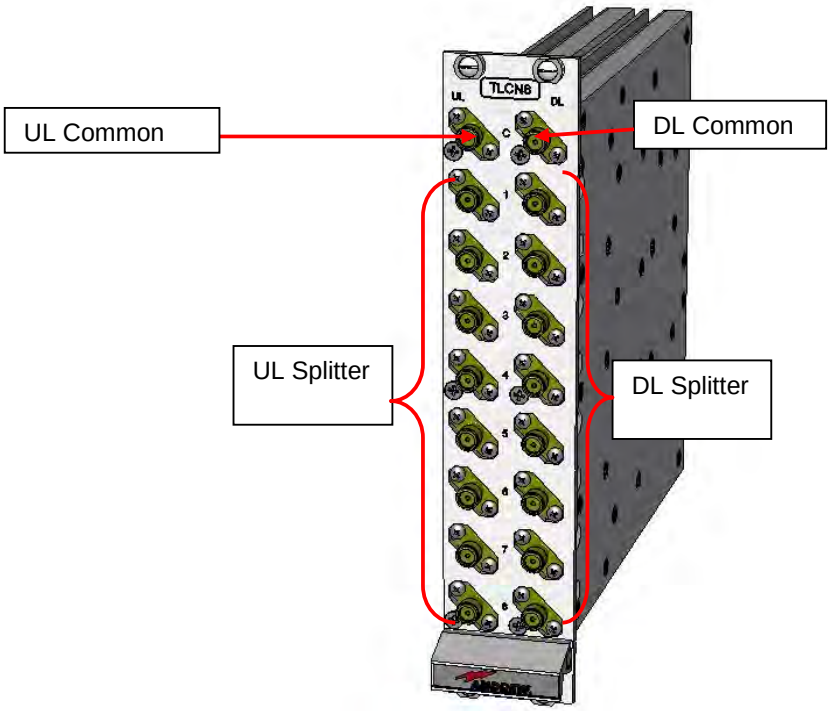

Figure 6-40 TLCN8-W splitter-combiner

The TLCN8-W is a wideband 8-way RF combiner designed to distribute the signal coming from a donor source to the optical TRXs of a Master Unit.

The TLCN8-W wideband 8-way RF combiner provides two identical combining sections for the UL and DL which can be used to:

- combine 8 RF signals into a common RF output
- split an RF input into 8 RF output signals

It is a passive wideband module.

6.5.2. RF Ports

- 1 DL common RF port ("C")
- 8 DL split RF ports (labelled "1","2","3","4"…)
- 1 UL common RF port ("C")
- 8 UL split RF ports (labelled "1","2","3","4"…)

Note: Each port is bidirectional.

6.5.3. TLCN8-W Main Applications

The main applications of the TLCN8-W module are:

- Connecting a donor source to more than one TFLN master optical TRX, so that:
  - TLCN8-W splits the DL input coming from a donor source into 8 output signals entering 8 different TFLN master optical TRXs
  - TLCN8-W combines the UL inputs coming from 8 TFLN master optical TRXs into 1 common signal entering the donor source
- Connecting a TFLN master optical TRX to more than one donor source within the same service, so that:
  - TLCN8-W combines the two DL inputs coming from up to 8 donor sources into 1 output signal entering the TFLN master optical TRX.
  - TLCN8-W splits the UL inputs coming from the TFLN master optical TRX into 8 different output signals entering up to 8 different donor sources.
- More TLCN8-W modules can be used in cascade connections.

6.5.4. TLCN8-W Insertion Loss

The TLCN8-W insertion loss varies slightly depending on the frequency bands, check relevant bulleting for the values

6.5.5. Warnings

The overall input power must not exceed +24dBm when combining and +33dBm when splitting.

6.5.6. TLCN8-W Installation

Since the TLCN8-W module does not require any power supply it can be housed either in an active or a passive TPRN subrack.

1. Unpack the kit which includes: 1 TLCN8-W

   16 RF jumpers (SMA-m), 2 x 25cm, 12 x 35cm, 2 x 45cm
2. Carefully insert the TLCN8-W module into any of the TPRN subrack slots and tighten the four screws on the front corners.
3. Connect RF cables to the UL and DL ports, according to what has been planned by the designer. Use an appropriate torque wrench to fix each cable to their relevant ports.
4. In case some ports remain unused, remember to connect them to a 50Ω load (not included)

6.6. RF DUAL BAND COUPLER TLDN

6.6.1. Description

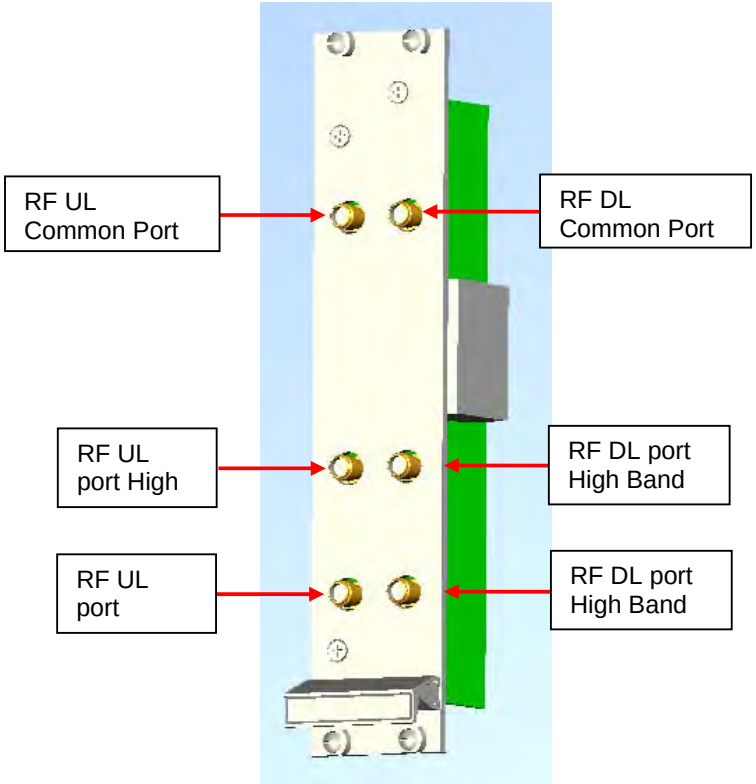

Figure 6-41 TLDN dual band duplexer

The TLDN is a passive RF dual band coupler designed to distribute signals within the master unit when coming from different bands.

Main operations carried out are:

- In downlink, it combines a low band RF signal (800MHz to 1000MHz) and a high-band RF signal (1700MHz to 2200MHz) into a common RF path.
- In uplink, it filters the composite signal into a low-band (800MHz to 1000MHz) and a high-band (1700MHz to 2200MHz).

It is a passive module.

6.6.2. RF Ports

- 1 UL common RF input port ("C") for the combined UL signal
- 1 UL high-band RF output port
- 1 UL low-band RF output port
- 1 DL common RF output port ("C") for the combined DL signal
- 1 DL high-band RF input port
- 1 DL low-band RF input port

6.6.3. TLDN Main Applications

Main applications of the TLDN module are:

- Connecting 2 donor sources with different services to one TFLN master optical TRX in a dual band system, so that:
  - the TLDN combines the DL inputs coming from the 2 different donor sources (carrying different services) into an output signal entering the TFLN master opticalTRX
  - TLDN filters the UL input coming from a TFLN master optical TRX into 2 UL outputs entering 2 different donor sources (carrying different services)

6.6.4. TLDN Insertion Loss

When designing the system, remember to take into account the insertion loss of the TLDN, check relevant bulletin for the values

6.6.5. Warnings

The overall input power must not exceed +27dBm.

6.6.6. TLDN Installation

Since the TLDN module does not require any power supply, it can be housed either in an active or a passive TPRN subrack.

1. Unpack the kit which includes: 1 TLDN
   2 RF jumpers (SMA-m), 2 x 45cm
2. Carefully insert the TLDN module in any of the TPRN subrack slots and tighten the 4 screws on the front corners.
3. Connect RF cables to the UL and DL ports, according to what has been planned by the designer. Use an appropriate torque wrench to fix each cable to their relevant ports.

6.7. RF TRI BAND COUPLER TLTN

6.7.1. Description

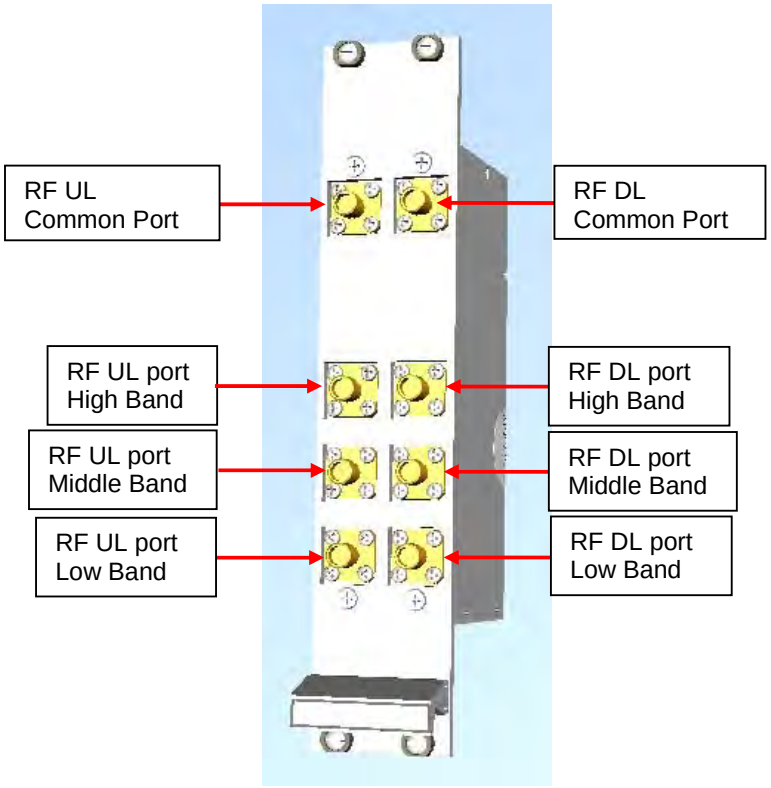

Figure 6-42 TLTN tri-band coupler

The TLTN is a passive RF tri band coupler designed to combine/split signals coming from different bands.

Main operations carried out are:

- In downlink, it combines a low-band signal, a middle-band signal and a high-band signal onto a single RF path.
- In uplink, it filters a composite signal into low-band, a middle-band and a low-band one.

6.7.2. TLTN Models

The TLTN tri-band combiner is available in different versions, depending on the bands it addresses. For a list of the TLTN models currently available check relevant bulletin.

6.7.3. RF Ports

- 1 DL common RF output port ("C") for the combined DL signal
- 1 DL Low-Band RF input port
- 1 DL Middle-Band RF input port
- 1 DL High-Band RF input port
- 1 UL common RF input port ("C") for the combined UL signal
- 1 UL Low-Band RF output port
- 1 UL Middle-BandRF output port
- 1 UL High-Band RF output port

6.7.4. TLTN Main Applications

The main applications of the TLTN module are:

- Connecting three donor sources with different services to one TFLN master optical TRX in a tri band system, so that:
  - the TLTN combines the DL inputs coming from 3 different donor sources (carrying different services) into an output signal entering the TFLN master optical TRX
  - the TLTN filters the UL input coming from the TFLN master optical TRX into 3 UL outputs entering 3 different donor sources (carrying different services)

6.7.5. TLTN Insertion Loss

When designing the system, remember to take into account the insertion loss of the TLTN, check relevant bulletin for the values.

6.7.6. Warnings

The overall input power must not exceed +27dBm

6.7.7. TLTN Installation

Since the TLTN module does not require any power supply it can be housed either in an active or a passive TPRN subrack.

1. Unpack the kit which includes: 1 TLTN
   2 RF jumpers (SMA-m), 2 x 45cm
2. Carefully insert the TLTN module in any of the TPRN subrack slots and tighten the 4 screws on the front corners.
3. Connect RF cables to the UL and DL ports, according to what has been planned by the designer. Use an appropriate torque wrench to fix each cable to relevant ports.

6.8. RF DUPLEXER, TDPN

6.8.1. Description

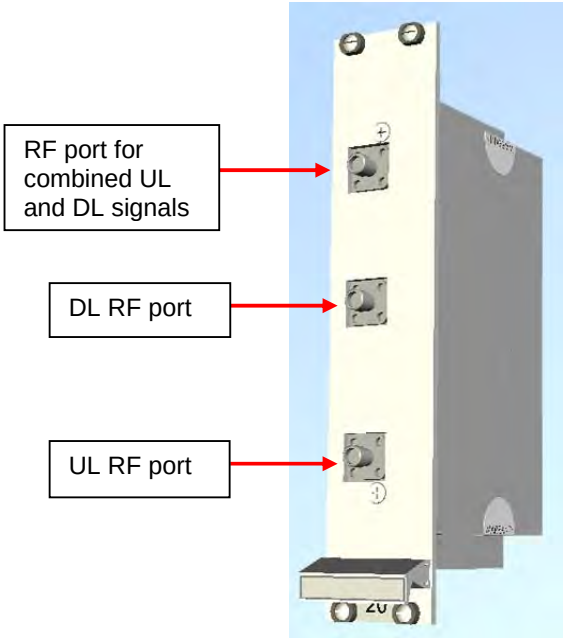

Figure 6-43 RF duplexer TPDN

The TDPN is a frequency-dependent duplexer which combines downlink and uplink signals while maintaining isolation and stability. This board has been designed to support duplexed Base Stations.

6.8.2. TLDN Models

The TLDN is available in different versions, depending on the band it addresses. For a list of the TLDN models currently available check relevant bulletin.

6.8.3. RF Ports

- 1 DL RF output port
- 1 UL RF input port
- 1 common RF port ("C") for UL and DL combined signals

6.8.4. TDPN Main Applications

The TDPN main application is to connect the duplexed antenna port of the donor source to the ION-B system. The TDPN splits the DL and UL signals coming combined from the donor port into two separated ports.

6.8.5. TDPN Insertion Loss

When designing the system, remember to take into account the insertion losses of the TDPN, check the values on relevant bulletin.

6.8.6. Warnings

The overall input power must not exceed +34dBm.

6.8.7. TDPN Installation

Since the TDPN module doesn't require any power supply it can be housed either in an active or a passive TPRN subrack.

1. Unpack the kit which includes: 1 TDPN
   2 RF jumpers (SMA-m), 2 x 35cm
2. Carefully insert the TDPN module in any of the TPRN subrack slots and tighten the 4 screws on the front corners.
3. Connect RF cables to common UL and DL ports, according to what has been planned by the designer. Use an appropriate torque wrench to fix each cable to their relevant ports.

6.9. POINT OF INTERFACE TPOI

6.9.1. TPOI SISO

6.9.1.1. Description

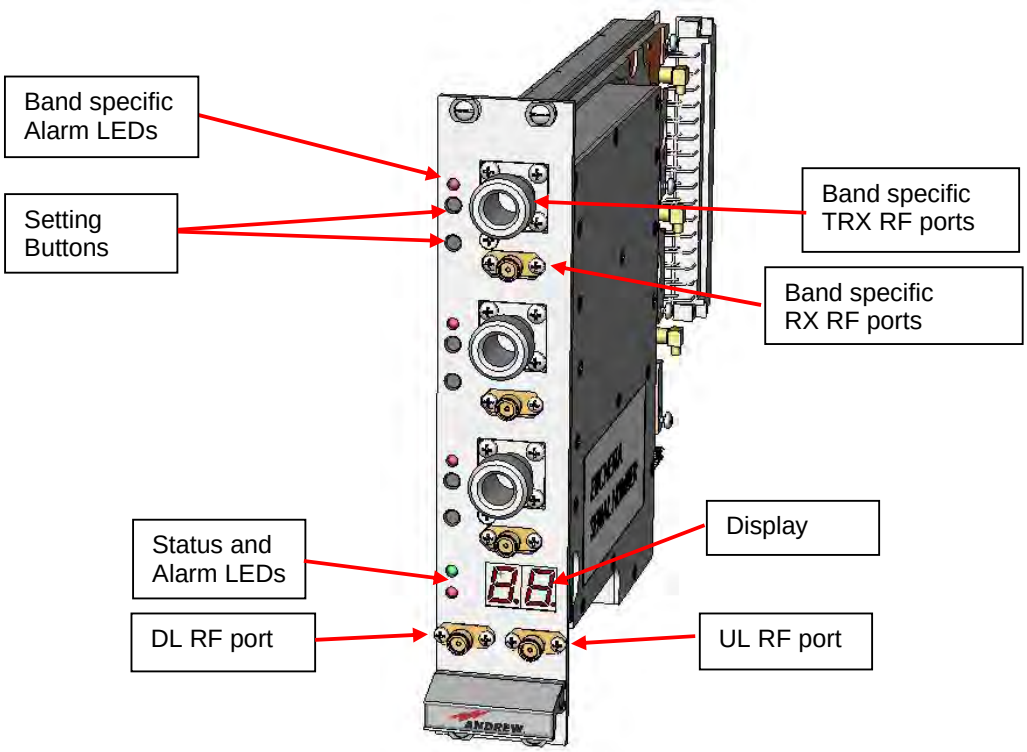

Figure 6-44 TPOI point of interface

The TPOI is an integrated point of interface which enables triple band, applications. Different configurations are available answering to the possible band combinations.

TPOI includes duplexer, digital adjustable attenuator, downlink automatic level control (ALC) and cross band coupler functionalities which allows to feed the master optical TRX with proper levelling.

6.9.1.2. TPOI Models

The TPOI is available in different versions, depending on the band it addresses. For a list of the TPOI models currently available check relevant bulletin.

6.9.1.3. RF Ports

- 3 TRX RF ports, one for each band
- 3 RX RF ports, one for each band
- 1 DL RF output port
- 1 UL RF input port

6.9.1.4. Setting Buttons and Display

TPOI is provided with two setting buttons for each band which can be used to set attenuation manually through the following steps:

1. Press DL or UL button according to the attenuation you want to set. Current value is displayed in the display.
2. Press again the button to start setting procedure: the value on the display start blinking
3. Use DL button to increase attenuation value and UL button to decrease it
4. Hold again the initial button for more then 3 sec. to have the value stored.

Alternatively attenuation can be set through LMT or supervision system

6.9.1.5. TPOI Visual alarms

The TPOI front panel is provided with 5 LEDs showing status and alarm information. Two of them are related to the TPOI board while the other three red LED are reserved for band specific information

LED significance is reported in the table below.

Label	LED colour	Significance
=	Green	Power supply status OK
┌┘	Red	General TPOI failure related to internal power supply failure
┌┘	Red	Indicate band specific alarm: - Over Power: exceeding absolute maximum input power - UL RF alarm
┌┘	Red	Indicate band specific alarm: - Over Power: exceeding absolute maximum input power - UL RF alarm
┌┘	Red	Indicate band specific alarm: - Over Power: exceeding absolute maximum input power - UL RF alarm

table 6-14 LED alerts on the TPOI front panel

Further information about alarm status is delivered by the ION-B Supervision System.

6.9.1.6. TPOI Power Supply

Each TPOI is supplied by the subrack backplane (12V).

6.9.1.7. TPOI Insertion Loss

When designing the system, remember to take into account the insertion losses of the TPOI, check the values on relevant bulletin.

6.9.1.8. Warnings

The overall DL input power must not exceed +33dBm.

6.9.1.9. Inserting or removing TPOI modules

- Do not remove or insert any TPOI module into TPRN subrack before having switched off main power supply.
- The TPOI modules must be handled with care, in order to avoid damage to electrostatic sensitive devices.
- When installing TPOI modules in the subrack, take care to alternate active and passive cards in order to ensure proper heat dissipation.
- In a multi-subrack system, remember to assign to each subrack a proper RS485 bus address before installing the modules (please refer to Rack-Based Master Unit section for further details).

6.9.1.10. TPOI Installation

The TPOI can be accommodated in any active TPRN subrack slot. It is 7TE wide and 4HE high.

Note: In case a new TPOI module has to be installed in a still working Master Unit, switch off the subrack before inserting the plug-in TPOI module.

Firstly, gently insert the TPOI into one of the 12 available slots, and lock the 4 screws on the front corners.

Then, connect the system input signals to the TRX ports and if needed to the RX ports (remove SMA loads before connecting) making sure to connect to the right band dependant sections.

Connect the UL and DL RF cable to the next board UL and DL ports, respectively.

Use an appropriate torque wrench to fix these RF cables.

Label	LED colour	Status
=	Green	ON (power supply is on)
⌐⌐	Red	OFF (no major failure affects TPOI operations)
⌐⌐	Red	OFF (no major failure affects corresponding band, input level is OK)
⌐⌐	Red	OFF (no major failure affects corresponding band, input level is OK)
⌐⌐	Red	OFF (no major failure affects corresponding band, input level is OK)

table 6-15 LED alerts on the TPOI front panel

As you switch on the system, make sure to set properly the attenuation for each band (see Setting Buttons and Display section). The provided reading of the output power through the LMT or supervision system can help in setting up the system.

Remember that Remote Units should be switched on before the Master Unit in order to follow the correct Start-Up procedure.

6.9.1.11. TPOI Troubleshooting

In case a TPOI has any problems, this will be easily revealed through the LEDs on its front panel, otherwise troubleshooting can be carried out through the LMT or the Supervision system.

The below table reports a brief description of the TPOI alarms, together with a reference to the corresponding alerted LEDs.

As the table shows, LEDs on the TPOI front panel signal all high priority alarms while minor alarms, which detect critical situations which should be checked and tested in order to avoid future possible system faults, are only revealed by the LMR or the Supervision System.

Alarm Code (TSUN description)	Alarm description	Active LED	Supervision Priority Level	Action Recommended	Relé Priority Level
Over Power Band 1	Band 1 RF input power exceeds the absolute maximum composite input power	RED (band 1)	MAJOR	Reduce input power	MAJOR
Over Power Band 2	Band 2 RF input power exceeds the absolute maximum composite input power	RED (band 2)	MAJOR	Reduce input power	MAJOR
Over Power Band 3	Band 3 RF input power exceeds the absolute maximum composite input power	RED (band 3)	MAJOR	Reduce input power	MAJOR
Overdrive/ALC Limiting Band 1	Band 1 RF output power exceeds the defined Overdrive Threshold	NONE	MINOR	Reduce input power	MINOR
Overdrive/ALC Limiting Band 2	Band 1 RF output power exceeds the defined Overdrive Threshold	NONE	MINOR	Reduce input power	MINOR
Overdrive/ALC Limiting Band 3	Band 1 RF output power exceeds the defined Overdrive Threshold	NONE	MINOR	Reduce input power	MINOR
UL Band 1 alarm	Uplink RF stage malfunctioning	RED (band 1)	CRITICAL	Return the unit	MAJOR
UL Band 2 alarm	Uplink RF stage malfunctioning	RED (band 2)	CRITICAL	Return the unit	MAJOR
UL Band 3 alarm	Uplink RF stage malfunctioning	RED (band 3)	CRITICAL	Return the unit	MAJOR
Vcc alarm	Internal RF stage power supply malfunctioning	RED (general)	MJOR	Return the unit	MAJOR
Power Supply alarm	Subrack power supply failure	RED (general)	MAJOR	Check power supply provided by the subrack and in case replace it	MAJOR
Temperature alarm	Over-temperature alarm	NONE	WARNING	Check ventilation and environment	MINOR

table 6-16 LED alerts on the TPOI front panel

6.9.2. TPOI MIMO

6.9.2.1. Description

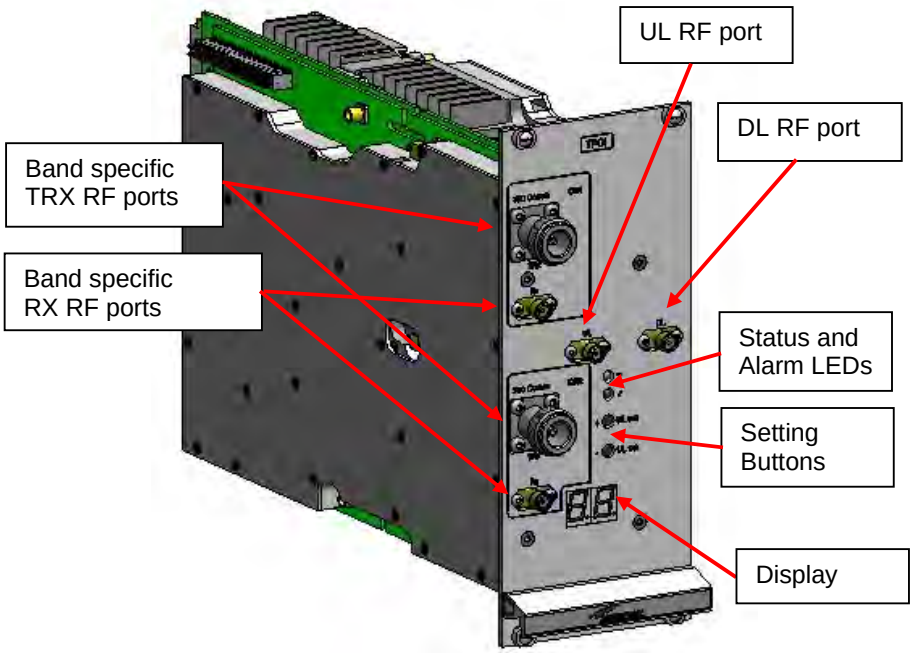

Figure 6-45 TPOI point of interface

The TPOI MIMO is an integrated point of interface which enables MIMO applications.

TPOI MIMO includes duplexer, digital adjustable attenuator, downlink automatic level control (ALC) and cross band coupler functionalities which allows to feed the MIMO booster through the master optical TRX with MIMO signals.

6.9.2.2. RF Ports

- 2 TRX RF ports, one for each channel
- 2 RX RF ports, one for each channel
- 1 DL RF output port
- 1 UL RF input port

6.9.2.3. Setting Buttons and Display

TPOI MIMO is provided with two setting buttons which can be used to set attenuation manually through the following steps:

1. Press DL or UL button according to the attenuation you want to set. Current value is displayed in the display.
2. Press again the button to start setting procedure: the value on the display start blinking
3. Use DL button to increase attenuation value and UL button to decrease it
4. Hold again the initial button for more then 3 sec. to have the value stored.

Alternatively attenuation can be set through LMT or supervision system

6.9.2.4. TPOI MIMO Visual alarms

The TPOI front panel is provided with 2 LEDs showing status and alarm information.

LED significance is reported in the table below.

Label	LED colour	Significance
=	Green	Power supply status OK
┌┘	Red	General TPOI failure

table 6-17 LED alerts on the TPOI MIMO front panel

Further information about alarm status is delivered by the ION-B Supervision System.

6.9.2.5. TPOI Power Supply

Each TPOI MIMO is supplied by the subrack backplane (12V).

6.9.2.6. TPOI Insertion Loss

When designing the system, remember to take into account the insertion losses of the TPOI, check the values on relevant bulletin.

6.9.2.7. Warnings

The overall DL input power must not exceed +33dBm.

6.9.2.8. Inserting or removing TPOI modules

- Do not remove or insert any TPOI module into TPRN subrack before having switched off main power supply.
- The TPOI modules must be handled with care, in order to avoid damage to electrostatic sensitive devices.
- When installing TPOI modules in the subrack, take care to alternate active and passive cards in order to ensure proper heat dissipation.

- In a multi-subrack system, remember to assign to each subrack a proper RS485 bus address before installing the modules (please refer to Rack-Based Master Unit section for further details).

6.9.2.9. TPOI MIMO Installation

The TPOI can be accommodated in any active TPRN subrack slot. It is 14TE wide and 4HE high so it occupies two slots

Note: In case a new TPOI module has to be installed in a still working Master Unit, switch off the subrack before inserting the plug-in TPOI module.

Firstly, gently insert the TPOI into any of available slots, and lock the 4 screws on the front corners.

Then, connect the system input signals to the TRX ports and if needed to the RX ports (remove SMA loads before connecting) making sure to connect to the right channel section.

Connect the UL and DL RF cable to the next board UL and DL ports, respectively.

Use an appropriate torque wrench to fix these RF cables.

As you switch on the system, make sure to set properly the attenuation (see Setting Buttons and Display section). The provided reading of the output power through the LMT or supervision system can help in setting up the system.

Remember that Remote Units should be switched on before the Master Unit in order to follow the correct Start-Up procedure.

Label	LED colour	Status
=	Green	ON (power supply is on)
┌┘	Red	OFF (no major failure affects TPOI operations)

table 6-18 LED alerts on the TPOI front panel

6.9.2.10. TPOI Troubleshooting

In case a TPOI has any problems, this will be easily revealed through the LEDs on its front panel, otherwise troubleshooting can be carried out through the LMT or the Supervision system.ù

The below table reports a brief description of the TPOI alarms, together with a reference to the corresponding alerted LEDs.

As the table shows, LEDs on the TPOI front panel signal all high priority alarms while minor alarms, which detect critical situations which should be checked and tested in order to avoid future possible system faults, are only revealed by the LMR or the Supervision System.

Alarm Code (TSUN description)	Alarm description	Active LED	Supervision Priority Level	Action Recommended	Relé Priority Level
Over Power	RF input power exceeds the absolute maximum composite input power	RED	MAJOR	Reduce input power	MAJOR
Overdrive/ALC Limiting	RF output power exceeds the defined Overdrive Threshold	NONE	MINOR	Reduce input power	MINOR
UL MIMO Ch.1 RF alarm	UL Ch.1 RF stage malfunctioning or syncronization missing	RED	CRITICAL	Check RF cables. If ok, try rebooting the unit, if no changes return the unit	MAJOR
UL MIMO Ch.2 RF alarm	UL Ch.2 RF stage malfunctioning or syncronization missing	RED	CRITICAL	Check RF cables. If ok, try rebooting the unit, if no changes return the unit	MAJOR
DL MIMO Ch.1 RF alarm	DL Ch.1 RF stage malfunctioning or syncronization missing	RED	CRITICAL	Check RF cables. If ok, try rebooting the unit, if no changes return the unit	MAJOR
DL MIMO Ch.2 RF alarm	DL Ch.2 RF stage malfunctioning or syncronization missing	RED	CRITICAL	Check RF cables. If ok, try rebooting the unit, if no changes return the unit	MAJOR
Vcc alarm	Internal power supply malfunctioning	RED	MJOR	Return the unit	MAJOR
Power Supply alarm	Subrack power supply failure	RED	MAJOR	Check power supply provided by the subrack and in case replace it	MAJOR
Temperature alarm	Over-temperature alarm	NONE	WARNING	Check ventilation and environment	MINOR

table 6-19 LED alerts on the TPOI front panel

6.10. PASSIVE MULTIBAND POINT OF INTERFACE TPOI-P

6.10.1. Description

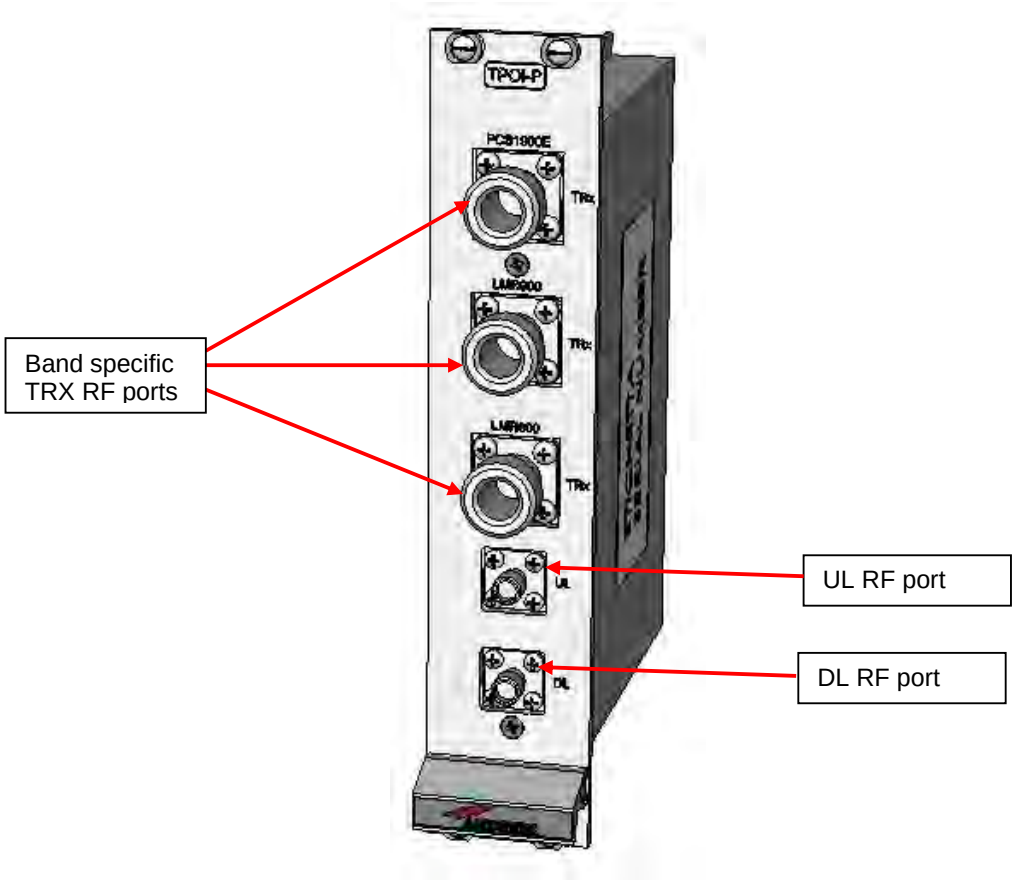

Figure 6-46 TPOI-P passive point of interface

The TPOI-P is an integrated passive multiband point of interface which enables triple band, applications. Different configurations are available answering to the possible band combinations.

TPOI-P includes duplexer and cross band coupler functionalities which allows to feed the master optical TRX

6.10.2. TPOI-P Models

The POI-P is available in different versions, depending on the band it addresses. For a list of the TPOI-P models currently available check relevant bulletin.

6.10.3. RF Ports

- 3 TRX RF ports, one for each band
- 1 DL RF output port
- 1 UL RF input port

6.10.4. TPOI-P Main Applications

TPOI-P module is used to interface with duplexed signals coming from different donor sources and combine them into RF connectors to drive the TFLN master optical TRX.

6.10.5. TPOI-P Insertion Loss

When designing the system, remember to take into account the insertion losses of the TPOI-P, check the values on relevant bulletin.

6.10.6. Warnings

The overall input power must not exceed +33dBm.

6.10.7. TPOI-P Installation

Since the TPOI-P module does not require any power supply, it can be housed either in an active or a passive TPRN subrack.

1. Unpack the kit which includes: 1 TPOI-P
   2 RF jumpers (SMA-m), 2 x 35cm
2. Carefully insert the TPOI-P module into any of the TPRN subrack slots and tighten the four screws on the front corners.
3. Connect RF cables according to what has been planned by the designer. Use an appropriate wrench to fasten each cable to their relevant ports.

7. WARNING AND SAFETY REQUIREMENTS

7.1. EQUIPMENT SYMBOLS USED / COMPLIANCE

Please observe the meanings of the following symbols used in our equipment and the compliance warnings:

Symbol	Compliance	Meaning / Warning
---	FCC	**For industrial (Part 20) signal booster:** WARNING: This is NOT a CONSUMER device. It is designed for installation by FCC LICENSEES and QUALIFIED INSTALLERS. You MUST have an FCC LICENSE or express consent of an FCC Licensee to operate this device. Unauthorized use may result in significant forfeiture penalties, including penalties in excess of $100,000 for each continuing violation.
		For (Part 90) signal booster: Part 90 Signal Boosters THIS IS A 90.219 CLASS B DEVICE WARNING. This is NOT a CONSUMER device. It is designed for installation by FCC LICENSEES and QUALIFIED INSTALLERS. You MUST have an FCC LICENSE or express consent of an FCC Licensee to operate this device. You MUST register Class B signal boosters (as defined in 47 CFR 90.219) online at www.fcc.gov/signal-boosters/registration. Unauthorized use may result in significant forfeiture penalties, including penalties in excess of $100,000 for each continuing violation. ID: 7702893-00
ⓘ	CE	Alert sign to R&TTE To be sold exclusively to mobile operators or authorized installers – no harmonized frequency bands, operation requires license. Intended use: EU and EFTA countries
CE 0700		Indicates conformity with the R&TTE directive 1999/5/EC certified by the notified body no. 0700.

7.2. ENVIRONMENTAL CONDITIONS

This equipment is designed to be installed in indoor environments.
Operating temperature: +5 to +40°C

Do not install in corrosive atmosphere or in critical environmental conditions such as hazardous classified areas. Hazardous locations are those areas where fire or explosion hazards may exist due to flammable gases or vapours, flammable liquids, combustible dust, or ignitable fibres or flyings.

7.3. INSTALLATION SITE FEATURES

A trained technician should carry out the installation of the master unit. Since the system is designed for indoor installation, the master unit should be installed in a dry and suitable location where:

- there is no risk of explosion;
- the environment is not classified as a high-risk one in case of fire;
- suspended particles are not to be found in great concentration;
- there is no risk of traffic which could cause collision damages;
- the site is properly located with respect to the ergonomic positioning of the working environments;
- the system is placed in a private room, protected against any possible violation;
- there is no direct sunlight or where water may drip on the device (for example under air-conditioning equipment).
- the site must be accessible by maintenance personnel;
- the site must be dry, with low humidity;
- the site must guarantee proper space for cables and natural ventilation for the system;
- 2 meters must be kept between the rack and any heating opening.

The Remote Units should be mounted in reasonable locations as well:

- Do **not** install Remote Units inside heating or conditioning areas;
- Do **not** install Remote Units inside cable pipelines or fire-prevention sites (fire escapes, lift tunnels, emergency exits; which have to guarantee defined safety standards);
- Please take into consideration that the temperature in the upper part of a room is higher than at the 2 meter height. For false ceiling installation of Remote Units, verify that the environment temperatures do not exceed allowed limits;
- Each Remote Unit requires its own power and a connection to the mains might be needed;
- Take into consideration that each Remote Unit transmits an RF signal and the safety volume must be respected (refer to country regulations for safety volume magnitude);
- Remote Units must be mounted according to installation instructions;
- Weight and dimensions of Remote Units should be carefully considered when choosing the installation site and positioning. During any installation step, please consider the potential risk of any equipment falling or dropping unexpectedly.
- When choosing the installation site and position, please consider that all Remote Units must be accessible for tests and maintenance.

7.4. SAFETY AND PRECAUTIONS DURING INSTALLATION OR MAINTENANCE

During installation, the following tools and equipment will be needed:

Typical electrician tools:
cross-point screwdriver, scissors, pliers, nippers, drill and bits, screws for fixing Remote Units to the wall.

Typical equipment:
proper ladder, scaffolding or air platform for installation of Remote Units.

Attention: some modules are electrostatic-sensitive devices; electrostatic discharges are caused by direct contact or by an electrostatic field. If a charged body approaches an electrically conducting surface, the acquired potential is discharged. An equalising current can than flow in the associated circuitry and generate permanently damaging voltages by induction.

☞ **Note: The human body should be grounded at the same potential as the component or equipment being handled. A wrist strap creates an equipotential electrical connection between the object and the human.**

Attention: Do not paint or otherwise coat ION-B equipment.

Attention: Great caution should always be used when installing any equipment at a height higher than 2 meters. Personnel who are installing this equipment should be informed about the possible risks and safety measures when elevated.

Never remove the cover from a TFAx Remote Unit or from a TPRN subrack when the power supply is ON.

7.5. POWER SUPPLY CONNECTION

Power connection must be carried out following all necessary precautions:

- It must be properly made according to due diligence rules (e.g. EN rules, IEC rules, etc.);
- in accordance with the rules for safety against direct or indirect contacts;
- in accordance with the rules for safety against over current (short circuit, overloading)
- in accordance with the rules for safety against over voltage;
- connection is to be carried out by appropriate and competent staff

Note: **In North America, this equipment is to be installed in accordance with the National Electric Code (NEC) ANSI/NFPA 70 and the Canadian Electric Code (CEC) Part 1, C22.1.**

Attention: Do not remove or insert any module into the TPRN sub-rack without prior switching the power supply OFF.

Attention

Do not connect the AC power until you have verified that the line voltage is correct.

Do not remove the plastic cover of the external power supply adapter.

7.6. SAFETY AND LASER PRECAUTIONS

The optical transmitter used in the ION-B contains a laser which has a power level that is not dangerous for health. However it is classified as class 1 equipment (in accordance with EN60825). It is nevertheless prudent, during the installation phase, to observe the following rules:

- Never look directly inside the optic connector exit of the transmitter when it is switched on. The wavelength of the laser is not visible to the human eye, which means that long-term damage will not be immediately known.

- When working with the optical connectors, check at each end that both transmitting lasers are switched off.

7.7. HEALTH AND SAFETY

Please be aware that each country or governmental body has established its own specific limits for RF exposure, to which the installation of any radiating antenna must conform. When installing your ION-B system, take care to comply to your local regulations and guidelines about RF exposure limits.

Antenna installation must conform to the following guidelines to meet FCC and RSS RF exposure limits, otherwise an environmental evaluation is required.

RSS Canadian standards

To meet RSS Canadian standard the following guidelines have to be taken into account:

- For any situation where multiple carrier signals are present, take care to reduce the single-carrier output rating at least by 3.5dB, especially when the output signal is reradiated and can cause interference with adjacent band users. This power reduction can be achieved by reducing the input power which enters the TFLN input ports, not through an attenuator at the output of the ION-B devices.

FCC US standards

To meet FCC US standard the following guidelines have to be taken into account:

- To comply with the FCC exposure compliance requirements, the following antenna installation and device operating conditions must be satisfied: The antenna(s) used in the system must be installed to maintain at least a 50-cm separation distance from any person. The highest allowed antenna gain, including coaxial cable loss, is 11dBi. RF exposure compliance may need to be addressed at the time of licensing, as required by the responsible FCC Bureaus(s), including antenna co-locating requirements of 1.1307(b)(3).

7.8. ELECTROMAGNETIC FIELDS AND RF POWER

The ION-B system generates electromagnetic radiation, which can exceed safety levels in the immediate vicinity of the antenna.

The most widely accepted standards are those developed by the International Commission on Non-Ionizing Radiation Protection (ICNIRP) and the Institute of Electrical and Electronics Engineers (IEEE).

Formula for minimum safety distances

The formula for calculating the minimum safety distances uses the specifications of a particular antenna that could be driven by TFAx.

This equation includes the following factors:

- G is the antenna gain (in dB) compared to isotropic radiating antennas;

$$r_{min} = \sqrt{\frac{10^{\frac{(G-L)}{10}} P}{4 \cdot \pi \cdot S}}$$

- P is the RF power that is present at the antenna connector (in W);
- L is the total loss (in dB) between the TFAx Remote Unit output port and the antenna input port;
- S is the power density in air (in W/m2) maximum allowed. Its values should be calculated according to the limit exposures to time-variations and magnetic fields. The reference values are reported in the ICNIRP guidelines, unless otherwise specified by specific regulations.

(Please note that, if regulations only define the maximum electrical and magnetic field strengths, the allowed power density is able to be be obtained by:

$$S= E^2/377= B^2 \cdot 377$$

where 377 is the characteristic's impedance of the empty space).

Example 1.

A Medium Power TFAM 18/20P must distribute mobile signals through a directional antenna, fed by a 2-metre length RG223 cable (no splitters used). The antenna gain is 7 dB and the ION-B system distributes one GSM 1800 MHz carrier and one UMTS 2100 MHz carrier.

The maximum allowed power density we have to comply with is:

$$S = 10 \text{ W m}^{-2}$$

(typical ICNIRP reference level for general public exposure to time-varied electric and magnetic fields).

By reading the relevant notes for the TFAM 18/20P Remote Unit, we know the overall output power at the antenna port is able to be estimated as follows:

- 20 dBm ± 2 (+22 dBm maximum, equivalent to 0.158 W) for the Cellular 850 MHz band
- 20 dBm ± 1.5 (+21.5 dBm maximum, equivalent to 0.141 W) in the PCS 1900 MHz band.
- The total output power at the antenna port is therefore P = 0.158 + 0.141 = 0.299 W.

By reading the cable specs, we get that RG223 cable losses can be estimated at 0.55 dB/m. Total losses between the TFAM 18/20P output port and the antenna input port can therefore be estimated as follows:

$$L = 0.55 \text{ (dB/m)} \times 2 \text{ (m)} = 1.1 \text{ dB}$$

By replacing the above values of G, L, P, S parameters inside the formula 6.1, we therefore get the the following minimum safety distance from the antenna:

$$r_{min} = \{ 10 -\cdot \exp [(7 - 1.1) / 10] \cdot 0.299\} / (4\cdot\pi\cdot10) \} - \exp (1/2) = 0.096 \text{ m}$$

Example 2:

A Low Power TFAH85/19 through a directional antenna is used, fed by a 20 -metre length ½" cable, with a 2-way splitter. The antenna Gain is 7 dB and the ION-B system distributes one Cellular 850 MHz carrier and one PCS 1900 MHz carrier.
The maximum allowed power density we have to comply with is:

$$S = 50 \text{ W}\cdot\text{m}^2$$

(typical ICNIRP reference level for occupational exposure to time-varied electric and magnetic fields)

By reading the ION-B notes, we know that the output power per carrier at the TFAM antenna port is

- 30 dBm ± 2 (+32 dBm maximum, equivalent to 1.202 W) for the Cellular 850 MHz band
- 30 dBm ± 2 (+32 dBm maximum, equivalent to 1.202 W) for the PCS 1900 MHz band

The ½" cable losses are 0.07 dB/ m in the 900 MHz band, and 0.11 dB/m in the 2100 MHz band.

The splitter insertion losses are 3.5 dB. The total losses between the TFAH85/19 output port and the antenna input ports can therefore be estimated as follows:

$$L_{850MHz} = 0.07\ (dB/m) \times 20\ (m) + 3.5 = 4.9\ dB \text{ for Cellular 850 MHz signals}$$
$$L_{1900MHz} = 0.10\ (dB/m) \times 20\ (m) + 3.5 = 5.5\ dB \text{ for PCS 1900 MHz signals}$$

The term "10 exp (G-L/10) P" which appears inside the formula 6.1 should therefore be calculated seperately for each frequency, and then added in order to calculate the composite contribution:

$$P_{850MHz,\ ant} = 10 \exp [(7-4.9)/10] \cdot 1.202 = 1.949\ W$$
$$P_{1900MHz,\ ant} = 10 \exp [(7-5.5)/10] \cdot 1.202 = 1.698\ W$$
$$P_{composite} = P_{850MHz,\ ant} + P_{1900MHz,ant} = 3.647\ W$$

By dividing the total power through (4··S) and taking the square root according to the formula 6.1, we therefore get the following minimum safety distances from the antenna:

$$r_{min} = \{ P_{composite} /(4 \cdot \pi \cdot 50)\} - \exp (1/2) = 0.02\ m$$

<u>Example 3.</u>

There is a Medium Power TFAM91/18/20 which is connected to an omnidirectional antenna through a 10-metre length RG223 cable (no splitters used). The antenna Gain is 7 dB and the ION-B system distributes two GSM900 carriers, two GSM1800carriers, and one UMTS2100 carrier.

The maximum allowed electrical field strength is:

$$E = 6\ V\ m$$

(typical Italian reference level for exposure to time-varied electric and magnetic fields). The corresponding value of the maximum allowed power density is:

$$S = E^2 /377 = 0.1\ W/m^2$$

By reading the relevant notes for the TFAM 91/18/20 Remote Unit, the overall output power at the TFAM antenna port can be estimated as follows:

- 20 dBm ± 2 (+22 dBm maximum, equivalent to 0.158 W) for the Cellular 910 MHz:
- 21 dBm ± 2 (+23 dBm maximum, equivalent to 0.200 W) for the GSM1800)
- 26 dBm ± 1 (+27 dBm maximum, equivalent to 0.501 W) in the UMTS band
- The total output power at the antenna port is therefore:

  P = 0.158W x 2 + 0.200W + 0.501W = 1.345 W,

By reading the cable specs, we get that RG223 cable losses can be estimated at 0.55 dB/m. Total losses between the TFAM 91/18/20 output port and the antenna input port can therefore be estimated as follows:

L = 0.55 (dB/m) x 10 (m) = 5.5 dB

By replacing the above values of G, L, P, S parameters inside the formula 6.1, we therefore get the the following minimum safety distance from the antenna:

r_{min} = { 10 - exp [(7 - 5.5) / 10] - 1.345} / (4··0.1) } - exp (1/2) = 1.22 m

7.9. WARNING LABELS

CLASS 1 laser product

GROUND - Use this terminal for a safety ground connection for the equipment.

8. TECHNICAL SUPPORT

8.1. CONTACT ADDRESSES

The ION-B is developed by:

Commscope Italy Srl
Via Pier De Crescenzi 40
48018 Faenza, Italy
Tel: +39.0546.697111
Fax: +39.0546.682768

8.2. DCCS TECHNICAL SUPPORT

For technical assistance and support, please contact the DCCS technical support team.

Email: wisupport@commscope.com

+1 888-297-6433 in North and South America and +49 9099-69-333 in Europe, Middle East and Asia

8.3. RETURNING EQUIPMENT

Before returning any equipment to the manufacturer for repairation or replacement, the customer should give prior notice to the manufacturer and ask for the 'Return Material Authorisation' (RMA request).

RMA REQUEST FORM

Company name
Address
Contact person
Invoice number
Delivery note
№ of pieces
Model [1)]
Serial Number [1)]
Lot[1)]
Year[1)]
Description of the failure/ defect

[1)] Please refer to the serial label

Upon accepting your RMA request, the manufacturer will assign you a unique RMA code. You will therefore be able to return the equipment to the manufacturer. Please remember that:

- each piece of equipment must be packaged with care before shipment;
- a copy of the RMA request form must be included with the returning equipment, with clear indication of the RMA code you received from the manufacturer.

The returned pieces are able to be repaired (where possible) or replaced (when no repairations can be carried out). These operations are performed under warranty (please see the warranty conditions specified in the sales contract) or out-of-warranty. In the latter case, we will send you a bill for equipment repairation or replacement.

When returning the repaired or replaced equipment, the manufacturer will issue a check report, which will be included in the packaging together with the returned pieces. The customer will be informed of any corrective actions suggested for quality assurance.

9. APPENDIXES

9.1. APPENDIX A: SYSTEM COMMISSIONING

The following flow charts are a quick reference for the ION-B® system installation and commissioning.

The first flow chart (Figure 9-1 Flow-chart describing the main installation and commissioning steps) highlights the main steps for system installation and commissioning starting from the equipment unpacking up to the check of the coverage and call quality.

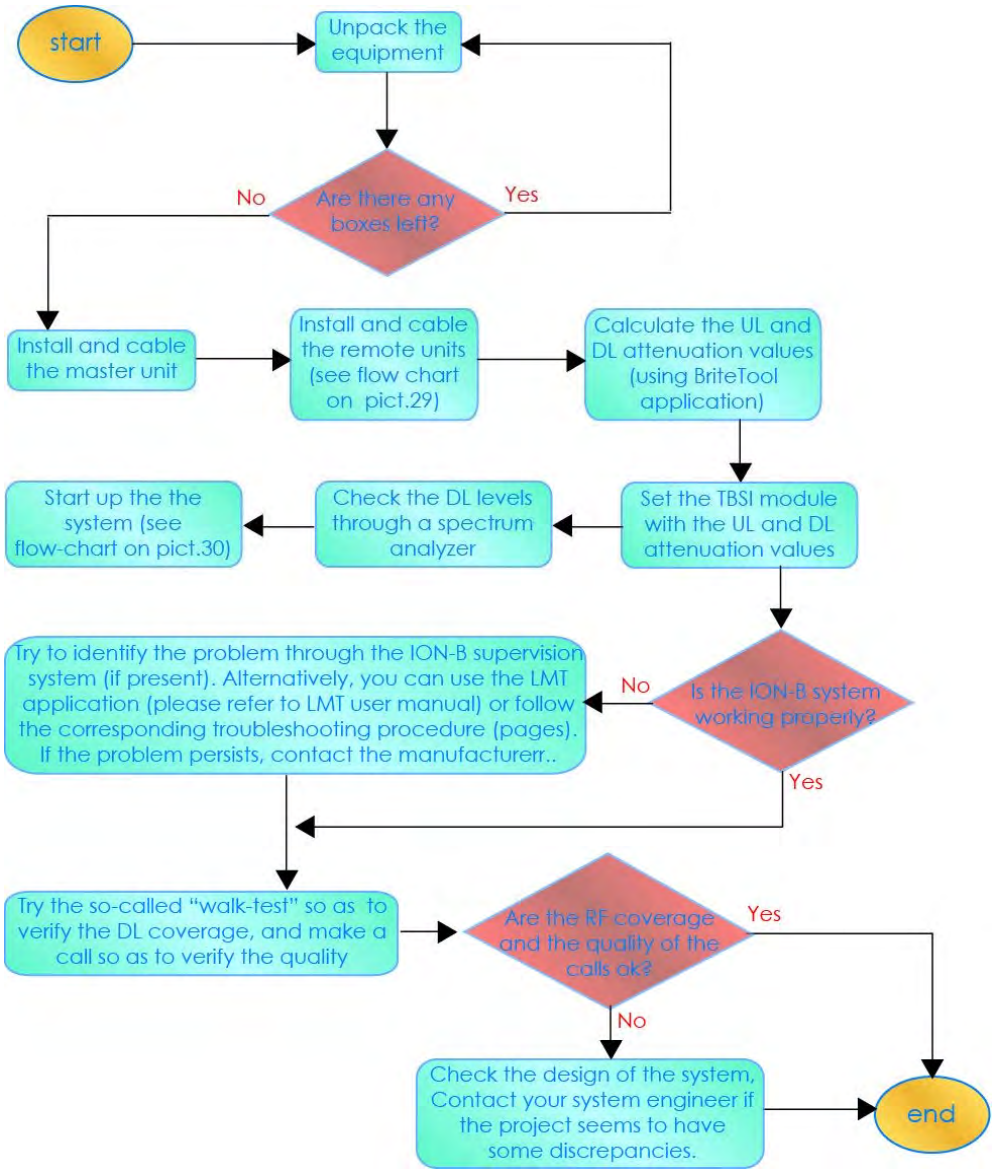

Figure 9-1 Flow-chart describing the main installation and commissioning steps

The previous flow chart contains the following cross references:

- the master unit installation and cabling is described in more detail in the flow chart (Figure 9-3 Flow-chart describing the Master unit installation and cabling steps). It follows the flow of actions from the subrack mounting on the cabinet up to the settings and connections needed in case remote supervision has to be considered.
  An example of system layout at master unit side is presented in figure below for a configuration consisting in one sector with four TFLN master optical Trxs.
  For more details about TSUNx configuration and start-up refer to the Remote Supervision manual.

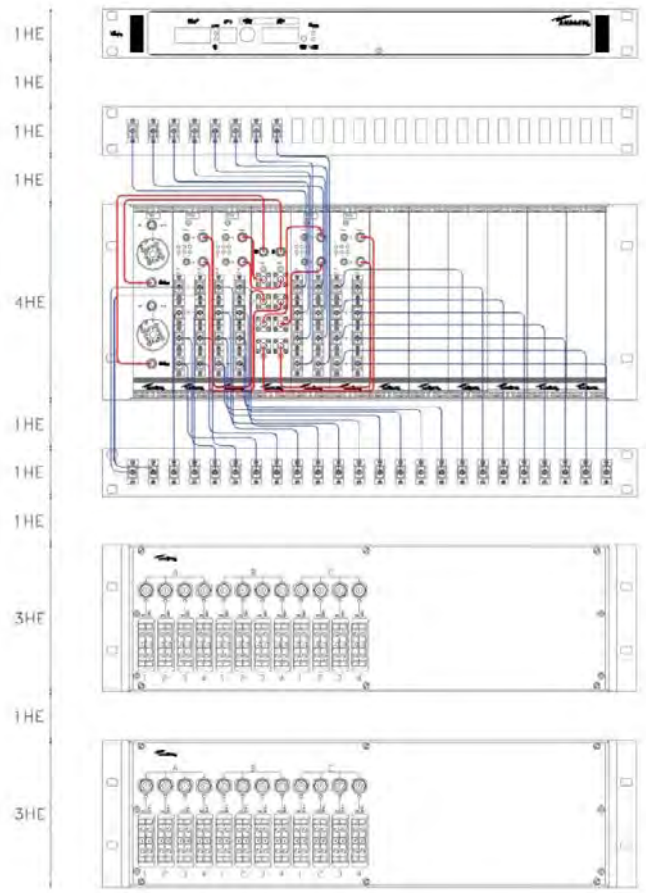

Figure 9-2 Case layout for a 1 sector with 4 TFLN master optical transceivers

- once the whole system has been installed, the attenuation on the base station interface has to be defined in order to set up the performances. Use the Britetool Software to calculate the required attenuation values for uplink and downlink. Refer to the Britetool manual for more information.

- the system start-up is described in more detail in the flow chart (Figure 9-4 Flow-chart describing the system start-up steps). It follows the flow of actions from the remote and master unit switch on and discovery up to the system configuration through LMT Software and/or remote supervision system.
  For more details on how to use the LMT and about TSUNx configuration and start-up refer to their relevant manuals.
- in case the system is not working properly, refer to the troubleshooting procedures reported in their relevant sections.

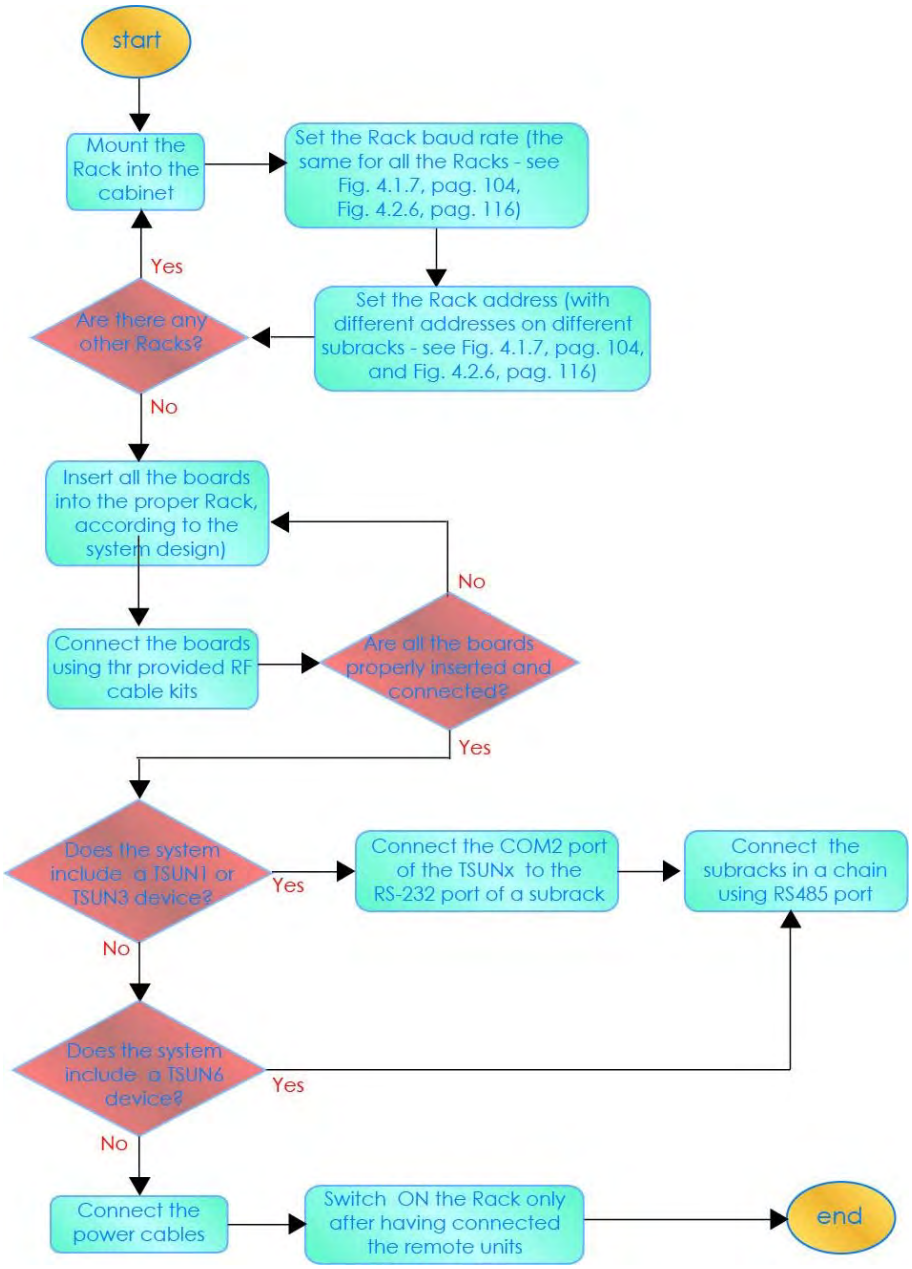

Figure 9-3 Flow-chart describing the Master unit installation and cabling steps

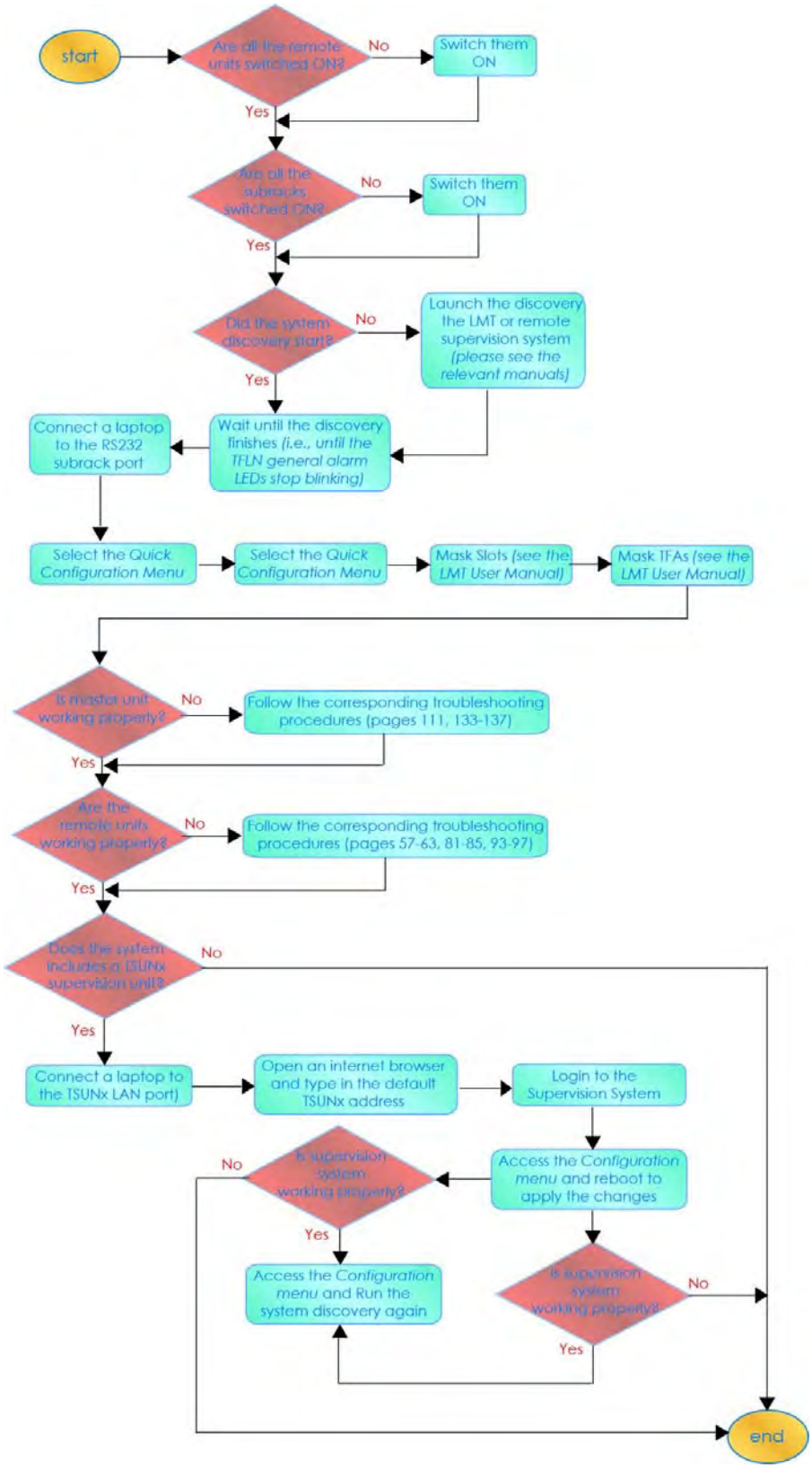

Figure 9-4 Flow-chart describing the system start-up steps