COMMSCOPE®

ION®-U

EU H 7P/80-85P/17(E)P/19P
Extension Unit

Manual

MF0200A9D

DISCLAIMER:

This document has been developed by CommScope, and is intended for the use of its customers and customer support personnel. The information in this document is subject to change without notice. While every effort has been made to eliminate errors, CommScope disclaims liability for any difficulties arising from the interpretation of the information contained herein. The information contained herein does not claim to cover all details or variations in equipment, nor to provide for every possible incident to be met in connection with installation, operation, or maintenance. This document describes the performance of the product under the defined operational conditions and does not cover the performance under adverse or disturbed conditions. Should further information be desired, or should particular problems arise which are not covered sufficiently for the purchaser's purposes, contact CommScope.

CommScope reserves the right to change all hardware and software characteristics without notice.

COPYRIGHT:

© Copyright 2016 CommScope Inc. All Rights Reserved.

This document is protected by copyright. No part of this document may be reproduced, stored in a retrieval system, or transmitted, in any form or by any means, electronic, mechanical photocopying, recording, or otherwise without the prior written permission of CommScope.

TRADEMARKS

All trademarks identified by ® or ™ are registered trademarks or trademarks, respectively, of CommScope. Names of products mentioned herein are used for identification purposes only and may be trademarks and / or registered trademarks of their respective companies.

Andrew Wireless Systems GmbH, 20-January-2016

TABLE OF CONTENTS

1. GENERAL 6

1.1. USED ABBREVIATIONS 6

1.2. HEALTH AND SAFETY 7

1.3. PROPERTY DAMAGE WARNINGS 7

1.4. COMPLIANCE 8

1.5. ABOUT COMMSCOPE 11

1.6. INTERNATIONAL CONTACT ADDRESSES FOR CUSTOMER SUPPORT 12

2. INTRODUCTION 14

2.1. PURPOSE 14

2.2. ION-U HIGH POWER REMOTE AND EXTENSION UNITS 14

3. FUNCTIONAL DESCRIPTION 15

4. COMMISSIONING 16

4.1. GENERAL 16

4.2. HIGH POWER EU MECHANICAL INSTALLATION 16
4.2.1. Health and Safety for mechanical installation 16
4.2.2. Property Damage Warnings for mechanical installation 16
4.2.3. Mounting distance between RU and EU 18
4.2.4. Wall mounting procedure 19
4.2.5. Pole mounting procedure with screw bands 20
4.2.6. Pole mounting procedure with brackets 21

4.3. ELECTRICAL INSTALLATION 23
4.3.1. Health and Safety for electrical installation 23
4.3.2. Property Damage Warnings for electrical installation 23
4.3.3. Connections 24
4.3.4. Grounding (Earthing) 27
4.3.5. Connection of the antenna cable 28
4.3.5.1. Cleaning procedure for RF cable connectors 29
4.3.5.2. Antenna cable connector assembly 32
4.3.6. Mains power connection 33
4.3.6.1. Mains power connection AC 33
4.3.6.2. Mains power connection DC 35
4.3.7. Extension Unit port connection 37
4.3.8. Coupling probe 38

4.4. COMMISSIONING FLOW-CHART 39

5. ALARMS 41
5.1. BITE AND ALARMS 41
5.2. TROUBLESHOOTING 41
5.3. STATUS LED ALARMS 41
6. MAINTENANCE 42
6.1. GENERAL 42
6.2. REPLACING THE FAN UNIT 43
6.3. CLEANING THE HEAT SINK 44
7. APPENDIX 45
7.1. ILLUSTRATIONS 45
7.2. SPECIFICATIONS 46
7.3. SPARE PARTS 46
7.4. LIST OF CHANGES 46
8. INDEX 47

FIGURES AND TABLES

figure 3-1 ION-U High Power EU block diagram 15
figure 4-1 Maximum distance between RU and EU 18
figure 4-2 Wall mounting – pitches 19
figure 4-3 Pole mounting – pitches 20
figure 4-4 Pole mounting – screw bands 20
figure 4-5 Pole mounting – fasten EU 20
figure 4-6 Pole mounting – max. diameter 21
figure 4-7 Pole mounting – with brackets 21
figure 4-8 Pole mounting – pitches 22
figure 4-9 Pole mounting – brackets 22
figure 4-10 Pole mounting – fasten EU 22
figure 4-11 ION-U EU H 7P/80-85P/17(E)P/19P AC version connector flange 24
figure 4-12 ION-U EU H 7P/80-85P/17(E)P/19P DC version connector flange 26
figure 4-13 Grounding bolts 27
figure 4-14 Grounding bolt, schematic view 27
figure 4-15 Mains power connector 34
figure 4-16 Mains power cable – AC 34
figure 4-17 EU (Extension Unit) connector 37
figure 4-18 EU connector and cable bridge 37
figure 4-19 Mounting the EU cable bridge 38
figure 7-1 ION-U EU H 7P/80-85P/17(E)P/19P required space 45

table 4-1 Specified torques 17
table 4-2 ION-U EU H connector flange 25
table 4-3 AC power cable pinning 34
table 4-4 EU connector pinning 37

1. General

1.1. Used Abbreviations

AC/DC	Alternating current / Direct Current
AIMOS	Andrew Integrated Management and Operating System
ALC	Automatic Level Control
BITE	Built-In Test Equipment
BTS	Base Transceiver Station
CDMA	Code Division Multiple Access
CE	“Conformité Européenne” (“European Conformity”)
CFR	Code of Federal Regulations
CPD	Channel Power Detection
DL	Downlink
DoC	Declaration of Conformity
EP	Extension Port
ESD	Electrostatic Discharge
EU	Extension Unit
GSM	Global System for Mobile Communication
GND	Ground (Earth)
GUI	Graphical User Interface
ICP3	Intercept Point 3rd order
ID No	Identification Number
ION	Intelligent Optical Network
LED	Light Emitting Diode
LMT	Local Maintenance Terminal
LTE	Long Term Evolution
MIMO	Multiple Input Multiple Output
MS	Mobile Station
MU	Main Unit
NF	Noise Figure
OMC	Operations and Maintenance Center
OTRx	Optical Transceiver = SRMU (Subrack Master Unit)
PIM	Passive Intermodulation
P_{in}	Input power
P_{out}	Output power
PSU	Power Supply Unit
Rev	Revision
RF	Radio Frequency
RU	Remote Unit
RX	Receiver
SISO	Single Input Single Output
SNMP	Simple Network Management Protocol
TX	Transmitter
UL	Uplink
UMTS	Universal Mobile Telecommunication System
UPS	Uninterruptible Power Supply
VSWR	Voltage Standing Wave Ratio
WCDMA	Wideband Code Division Multiple Access
WDM	Wavelength Division Multiplex
XML	Extensible Markup Language

1.2. Health and Safety

1. **Danger**: **Electrical hazard. Danger of death or fatal injury from electrical current. Obey all general and regional installation and safety regulations relating to work on high voltage installations, as well as regulations covering correct use of tools and personal protective equipment.**

2. **Danger: Electrical hazard. Danger of death or fatal injury from electrical current inside the unit in operation. Before opening the unit, disconnect mains power.**

3. **Caution:** High frequency radiation in operation. Risk of health hazards associated with radiation from the unit's inner conductor of the antenna port(s). Disconnect mains before connecting or replacing antenna cables.

4. **Caution:** High frequency radiation in operation. Risk of health hazards associated with radiation from the antenna(s) connected to the unit. Implement prevention measures to avoid the possibility of close proximity to the antenna(s) while in operation.

1.3. Property Damage Warnings

1. **Attention:** Due to power dissipation, the Extension Unit may reach a very high temperature. Do not operate this equipment on or close to flammable materials. Use caution when servicing the unit.

2. **Attention:** Only authorized and trained personnel are allowed to open the unit and get access to the inside.

3. **Notice:** Although the Extension Unit is internally protected against overvoltage, it is strongly recommended to ground (earth) the antenna cables close to the antenna connectors of the Extension Unit for protection against atmospheric discharge. In areas with strong lightning, it is strongly recommended to install additional lightning protection.

4. **Notice**: ESD precautions must be observed. Before commencing maintenance work, use the available grounding (earthing) system to connect ESD protection measures.

5. **Notice**: Only suitably qualified personnel are allowed to work on this unit and only after becoming familiar with all safety notices, installation, operation and maintenance procedures contained in this manual.

6. **Notice:** Keep operating instructions within easy reach and make them available to all users.

7. **Notice:** Read and obey all the warning labels attached to the unit. Make sure that all warning labels are kept in a legible condition. Replace any missing or damaged labels.

8. **Notice:** Only license holders for the respective frequency range are allowed to operate this unit.

9. **Notice**: Make sure the repeater settings are correct for the intended use (refer to the manufacturer product information) and regulatory requirements are met. Do not carry out any modifications or fit any spare parts, which are not sold or recommended by the manufacturer.

1.4. Compliance

1. **Notice**: For installations which have to comply with European EN50385 exposure compliance requirements, the following Power Density limits/guidelines (mW/cm²) according to ICNIRP are valid:
    - 0.2 for frequencies from 10 MHz to 400 MHz
    - F (MHz) / 2000 for frequencies from 400 MHz to 2 GHz
    - 1 for frequencies from 2 GHz to 300 GHz

2. **Notice:** For installations, which have to comply with FCC RF exposure requirements, the antenna selection and installation must be completed in a way to ensure compliance with those FCC requirements. Depending on the RF frequency, rated output power, antenna gain, and the loss between the repeater and antenna, the minimum distance D to be maintained between the antenna location and human beings is calculated according to this formula:

$$D_{[cm]} = \sqrt{\frac{P_{[mW]}}{4 * \pi * PD_{[mW/cm^2]}}}$$

where

- P (mW) is the radiated power at the antenna, i.e. the max. rated repeater output power in addition to the antenna gain minus the loss between the repeater and the antenna.
- PD (mW/cm²) is the allowed Power Density limit acc. to 47 CFR 1.1310 (B) for general population / uncontrolled exposures which is
    - F (MHz) / 1500 for frequencies from 300MHz to 1500MHz
    - 1 for frequencies from 1500MHz to 100,000MHz

RF exposure compliance may need to be addressed at the time of licensing, as required by the responsible FCC Bureau(s), including antenna co-location requirements of 1.1307(b)(3).

3. **Notice:** Installation of this equipment is in full responsibility of the installer, who has also the responsibility, that cables and couplers are calculated into the maximum gain of the antennas, so that this value, which is filed in the FCC Grant and can be requested from the FCC data base, is not exceeded. The industrial boosters are shipped only as a naked booster without any installation devices or antennas as it needs for professional installation.

4. **Notice:** For installations which have to comply with FCC/Industry Canada requirements:

   English :
   This device complies with FCC Part 15 and Industry Canada license exempt RSS standard(s). Operation is subject to the following two conditions: (1) this device may not cause interference, and (2) this device must accept any interference, including interference that may cause undesired operation of the device.

   This device complies with Health Canada's Safety Code. The installer of this device should ensure that RF radiation is not emitted in excess of the Health Canada's requirement. Information can be obtained at http: //www.hc-sc.gc.ca/ewh-semt/pubs/radiation/radio_guide-lignes_direct-eng.php.

   Changes or modifications not expressly approved by the party responsible for compliance could void the user's authority to operate the equipment.

   French :
   Cet appareil est conforme à FCC Partie15 d'Industrie Canada RSS standard exempts de licence (s). Son utilisation est soumise à Les deux conditions suivantes : (1) cet appareil ne peut pas provoquer d'interférences et (2) cet appareil doit accepter Toute interférence, y compris les interférences qui peuvent causer un mauvais fonctionnement du dispositif.

   Cet appareil est conforme avec Santé Canada Code de sécurité 6. Le programme d'installation de cet appareil doit s'assurer que les rayonnements RF n'est pas émis au-delà de l'exigence de Santé Canada. Les informations peuvent être obtenues :
   http://www.hc-sc.gc.ca/ewh-semt/pubs/radiation/radio_guide-lignes_direct-fra.php

   Les changements ou modifications non expressément approuvés par la partie responsable de la conformité pourraient annuler l'autorité de l'utilisateur à utiliser cet équipement.

5. **Notice:** Corresponding local particularities and regulations must be observed. For national deviations, please refer to the respective documents included in the manual CD that is delivered with the unit.

6. **Notice:** The unit complies with Overvoltage Category II. It also complies with the surge requirement according to EN 61000-4-5 (fine protection); however, installation of an additional medium (via local supply connection) and/or coarse protection (external surge protection) is recommended depending on the individual application in order to avoid damage caused by overcurrent.

   For Canada and US, components used to reduce the Overvoltage Category shall comply with the requirements of IEC 61643-series. As an alternative, components used to reduce the Overvoltage Category may comply with ANSI/IEEE C62.11, CSA Certification Notice No. 516, CSA C22.2 No. 1, or UL 1449. Suitability of the component for the application shall be determined for the intended installation.

7. **Note:** For a Class A digital device or peripheral:
   This equipment has been tested and found to comply with the limits for a Class A digital device, pursuant to part 15 of the FCC Rules. These limits are designed to provide reasonable protection against harmful interference when the equipment is operated in a commercial environment. This equipment generates, uses, and can radiate radio frequency energy and, if not installed and used in accordance with the instruction manual, may cause harmful interference to radio communications. Operation of this equipment in a residential area is likely to cause harmful interference in which case the user will be required to correct the interference at his own expense.

8. **Note:** For a Class B digital device or peripheral:
   This equipment has been tested and found to comply with the limits for a Class B digital device, pursuant to part 15 of the FCC Rules. These limits are designed to provide reasonable protection against harmful interference in a residential installation. This equipment generates, uses and can radiate radio frequency energy and, if not installed and used in accordance with the instructions, may cause harmful interference to radio communications. However, there is no guarantee that interference will not occur in a particular installation. If this equipment does cause harmful interference to radio or television reception, which can be determined by turning the equipment off and on, the user is encouraged to try to correct the interference.

9. **Note:** This unit complies with European standard EN60950.

Equipment Symbols Used / Compliance

Please observe the meanings of the following symbols used in our equipment and the compliance warnings:

Symbol	Compliance	Meaning / Warning
---	**FCC**	Unit is for FCC Part 20 purposes – COMMERCIAL MOBILE SERVICES – only. WARNING: This is NOT a CONSUMER device. It is designed for installation by FCC LICENSEES and QUALIFIED INSTALLERS. You MUST have an FCC LICENSE or express consent of an FCC Licensee to operate this device. Unauthorized use may result in significant forfeiture penalties, including penalties in excess of $100,000 for each continuing violation.
ⓘ	**CE**	Alert sign to R&TTE To be sold exclusively to mobile operators or authorized installers – no harmonized frequency bands, operation requires license. Intended use: EU and EFTA countries
CE 0700		Indicates conformity with the R&TTE directive 1999/5/EC certified by the notified body no. 0700.

Note: The Manufacturer's rated output power of this equipment is for single carrier operation. For situations when multiple carrier signals are present, the rating would have to be reduced by 3.5 dB, especially where the output signal is reradiated and can cause interference to adjacent band users. This power reduction is to be by means of input power or gain reduction and not by an attenuator at the output of the device.

1.5. About CommScope

CommScope is the foremost supplier of one-stop, end-to-end radio frequency (RF) solutions. Part of the *CommScope* portfolio are complete solutions for wireless infrastructure from top-of-the-tower base station antennas to cable systems and cabinets, RF site solutions, signal distribution, and network optimization. For patents see www.cs-pat.com.
CommScope has global engineering and manufacturing facilities. In addition, it maintains field engineering offices throughout the world.

Andrew Wireless Systems GmbH based in Buchdorf/ Germany, which is part of *CommScope*, is a leading manufacturer of coverage equipment for mobile radio networks, specializing in high performance, RF and optical repeaters. Our optical distributed networks and RF repeater systems provide coverage and capacity solution for wireless networks in both indoor installations and outdoor environments, e.g. tunnels, subways, in-trains, airport buildings, stadiums, skyscrapers, shopping malls, hotels and conference rooms.

Andrew Wireless Systems GmbH operates a quality management system in compliance with the requirements of ISO 9001 and TL 9000. All equipment is manufactured using highly reliable material. To maintain highest quality of the products, comprehensive quality monitoring is conducted at all fabrication stages. Finished products leave the factory only after a thorough final acceptance test, accompanied by a test certificate guaranteeing optimal operation.

This product meets the requirements of the R&TTE directive and the Declaration of Conformity (DoC) itself. A current version of the CE DoC is included in this manual CD delivered *. Any updated version of the DoC is available upon request from the local sales offices or directly from *CommScope* via the local Customer Support at one of the addresses listed in the following chapter.

According to the DoC, our “CE”-marked equipment can be used in all member states of the European Union.

Note: **Exceptions of and national deviations from this intended use may be possible. To observe corresponding local particularities and regulations, please refer to the respective documents (also in national language) which are included in the manual CD delivered.**

* In case the Declaration of Conformity (DoC) for the product was not included in the manual CD delivered, it is available upon request from the local sales offices or directly from *CommScope at one of the addresses listed in the following chapter*.

To make the most of this product, we recommend you carefully read the instructions in this manual and commission the system only according to these instructions.

For technical assistance and support, please also contact the local office or *CommScope* directly at one of the addresses listed in the following chapter.

1.6. International Contact Addresses for Customer Support

AMERICAS

Canada	
CommScope Canada	
Mail	505 Consumers Road, Suite 803 Toronto M2J 4V8, Canada
Phone	+1-905-878-3457 (Office) +1-416-721-5058 (Cell)
Fax	+1-905-878-3297
E-mail	wisupport@commscope.com

United States	
Andrew LLC, A CommScope Company	
Mail	620 North Greenfield Parkway Garner, NC 27529, U.S.A.
Phone	+1-888-297-6433
Fax	+1-919-329-8950
E-mail	wisupport@commscope.com

Caribbean & South American Region	
CommScope Cabos do Brasil Ltda.	
Mail	CALA Tech Support for *Distributed Coverage & Capacity Solutions (DCCS) products*: Rua Guaporanga, 49 Praça Seca – Rio de Janeiro – RJ ZIP: 21320-180, Brazil
Phone	+1-815-546-7154 (Cell) +55-15-9104-7722 (Office)
Fax	+ 55-15-2102-4001
E-mail	wisupport@commscope.com

Caribbean & Central American Region	
CommScope Mexico S.A. de C.V.	
Mail	CALA Tech Support for *Distributed Coverage & Capacity Solutions (DCCS) products*: Av. Insurgentes Sur 688, Piso 6 Col. Del Valle, CP: 03100 Mexico City, Mexico
Phone	+52-55-1346-1900 (Office)
Fax	+52-55-1346-1901
E-mail	wisupport@commscope.com

APAC

China, India and Rest of Asia	
Andrew International Corporation	
Mail	Room 915, 9/F Chevalier Commercial Centre 8 Wang Hoi Rd Kowloon Bay, Hong Kong
Phone	+852-3106-6100
Fax	+852-2751-7800
E-mail	wisupport.China@commscope.com

Australia & New Zealand	
Andrew Corporation (Australia) Pty Ltd.	
Mail	Unit 1 153 Barry Road Campbellfield VIC 3061, Australia
Phone	+613-9300-7969
Fax	+613-9357-9110
E-mail	wisupport.Australia@commscope.com

Africa & Middle East

Middle East & North Africa	
CommScope Solutions International Inc. (Branch)	
Mail	PO Box 48 78 22 Unit 3206, Floor 32, Jumeirah Business Center 5, Jumeirah Lakes Towers, Dubai, United Arab Emirates
Phone	+971 4 390 09 80
Fax	+971 4 390 86 23
E-mail	wisupport@commscope.com

South Africa	
Andrew Wireless Solutions Africa (PTY) LTD	
Mail	11 Commerce Crescent West Eastgate, Sandton PO Box 786117 Sandton 2146 South Africa
Phone	+ 27 11-719-6000
Fax	+ 27 11-444-5393
E-mail	wisupport@commscope.com

EUROPE

United Kingdom	
Andrew Wireless Systems UK Ltd	
Mail	Unit 15, Ilex Building Mulberry Business Park Fishponds Road Wokingham Berkshire RG41 2GY, England
Phone	+44-1189-366-792
Fax	+44-1189-366-773
E-mail	wisupport.uk@commscope.com

Germany	
Andrew Wireless Systems GmbH	
Mail	Industriering 10 86675 Buchdorf Germany
Phone	+49-9099-69-0
Fax	+49-9099-69-930
E-mail	wisupport@commscope.com

Austria	
Andrew Wireless Systems (Austria) GmbH	
Mail	Weglgasse 10 2320 Wien-Schwechat Austria
Phone	+43-1706-39-99-10
Fax	+43-1706-39-99-9
E-mail	wisupport.austria@commscope.com

Italy	
CommScope Italy S.r.l., Faenza, Italy	
Mail	Via Mengolina, 20 48018 Faenza (RA) Italy
Phone	+39-0546-697111
Fax	+39-0546-682768
E-mail	wisupport.italia@commscope.com

Czech Republic	
CommScope Solutions Czech Republic C-Com, spol. s r.o	
Mail	U Moruší 888 53006 Pardubice, Czech Republic
Phone	+49 871 9659171 (Office) +49 171 4001166 (Mobile)
Fax	+49 871 9659172
E-mail	wisupport@commscope.com

Scandinavia	
Andrew Norway (AMNW)	
Mail	P.O. Box 3066 Osloveien 10 Hoenefoss 3501 Norway
Phone	+ 47 32-12-3530
Fax	+ 47 32-12-3531
E-mail	wisupport@commscope.com

France	
CommScope France	
Mail	Immeuble Le Lavoisier 4, Place des Vosges 92052 Courbevoie, France
Phone	+33-1 82 97 04 00
Fax	+33-1 47 89 45 25
E-mail	wisupport@commscope.com

Switzerland	
CommScope Wireless Systems AG	
Mail	Tiergartenweg 1 CH-4710 Balsthal Switzerland
Phone	+41-62-386-1260
Fax	+41-62-386-1261
E-mail	wisupport.ch@commscope.com

Iberia Region – Spain & Portugal	
Andrew España S.A. A CommScope Company	
Mail	Avda. de Europa, 4 – 2ª pta. Parque Empresarial de la Moraleja Alcobendas, Madrid 28108, Spain
Phone	+34-91-745-20 40
Fax	+34-91-661-87 02
E-mail	wisupport.iberia@commscope.com

2. Introduction

2.1. Purpose

Mobile telephone and public safety systems transmit signals in two directions between base transceiver station (BTS) and mobile stations (MS) within the signal coverage area to carry voice and data traffic.

If weak signal transmissions occur within the coverage area because of indoor applications, topological conditions or distance from the transmitter, extension of the transmission range can be achieved by means of an optical distributed antenna system (DAS).

Office buildings, sports arenas, college campuses, industrial parks, and other areas of high demand require the specialized capacity boost that an optical DAS can provide to meet increasing customer demands for voice and data.

An optical DAS contains optical Master Units and a sufficient number of Remote Units to provide the necessary coverage. The number of the Remote Units depends on the coverage requirements of the DAS. Extension Units can be connected to Remote Units to provide coverage for further bands. The Remote Units are connected to the Master Unit with optical links.

The Master Unit is the connection to the Base Transceiver Stations. The configuration of a Master Unit depends on the number of the Remote Units and the frequency range.

2.2. ION-U High Power Remote and Extension Units

The ION-U is an optical fiber based DAS system that efficiently takes the outputs of multiple Base Transceiver Stations (BTS) sectors and converts those RF signals to optical to send them over fiber optic cables to Remote Units to provide coverage in indoor and outdoor locations. The system supports both low power and high power Remote Units and SISO and MIMO operation.

The ION-U EU H 7P/80-85P/17(E)P/19P is a multi-band, multi-operator Extension Unit used in conjunction with a Remote Unit in the ION optical distribution system. This system transports up to five frequency bands simultaneously (700 MHz, 800/850 MHz, and 1900 MHz), providing a cost-effective solution for distributing capacity from one or more base stations.

It has been specifically tested and optimized for GMSK, EDGE, CDMA, UMTS, HSPA+, LTE, and OFDM modulations. Furthermore it is provisioned for future modulation scheme evolutions.
These Remote and Extension Units feature independent downlink and uplink gain adjustments and an integrated channel power detector for in-band spectrum and PIM analysis and end-to-end auto leveling.

3. Functional Description

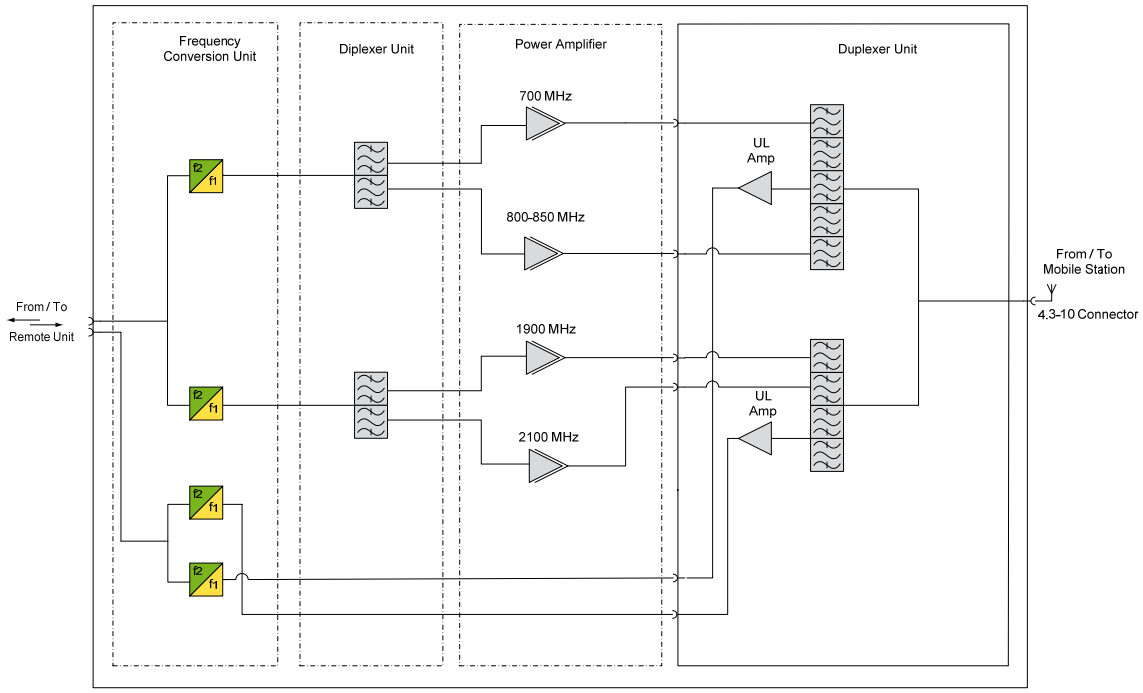

figure 3-1 ION-U High Power EU block diagram

In the Downlink (DL) path, the Extension Unit provides:

- Automatic Gain Control (AGC) of each converted signal to compensate for optical losses
- RF amplification of the converted RF signal for transmission while maintaining an excellent signal-to-noise ratio
- RF filtering to reject spurious emissions

In the Uplink (UL) path, the Extension Unit provides:

- RF amplification to boost the signals received by the antennas to maintain an excellent signal-to-noise ratio
- RF filtering to reject spurious emissions
- Automatic Level Control (ALC) to adjust the RF signal level to meet blocking requirements

4. Commissioning

4.1. General

Read and observe chapter 1.2 Health and Safety as well as the description carefully to avoid mistakes and proceed step by step as described.

- Do not operate the Extension Unit without terminating the antenna connectors. The antenna connectors may be terminated by connecting them to their respective antennas or to a dummy load.
- Only qualified personnel should carry out the electrical, mechanical, commissioning, and maintenance activities that require the unit to be powered on when open.
- When opening the Extension Unit do not damage the warranty labels on the internal devices. The warranty is void if the seals are broken.
- One of the three mounting kits has to be ordered separately. They are not contained within the standard equipment. See chapter 7.3 Spare Parts.

Unless otherwise agreed to in writing by CommScope, CommScope's general limited product warranty (http://www.commscope.com/Resources/Warranties/) shall be the warranty governing the Extension Units, including the installation, maintenance, usage and operation of the Extension Units.

4.2. High Power EU Mechanical Installation

4.2.1. Health and Safety for mechanical installation

Read and observe chapter 1.2 Health and Safety.

1. **Caution:** Risk of injury by the considerable weight of the unit falling. Ensure there is adequate manpower to handle the weight of the system.
2. **Caution:** Risk of serious personal injury by equipment falling due to improper installation. The installer must verify that the supporting surface will safely support the combined load of the electronic equipment and all attached hardware and components. The screws and dowels (wall anchors) used should also be appropriate for the structure of the supporting wall.

4.2.2. Property Damage Warnings for mechanical installation

1. **Attention:** Do not install the unit in a way or at a place where the specifications outlined in the Environmental and Safety Specifications leaflet of the supplier are not met.
2. **Attention:** Due to power dissipation, the Extension Unit may reach a very high temperature. Ensure sufficient airflow for ventilation.
3. **Notice:** Exceeding the specified load limits may cause the loss of warranty.
4. **Notice:** When connecting and mounting the cables (RF, expansion, mains, ...) ensure that no water can penetrate into the unit through these cables.

5. **Notice**: Ensure that there is free access to the electrical connections as well as to the cabinet. The approved bending radius of the connected cables must not be exceeded. See chapter 7.1 for more details.
6. **Notice**: If any different or additional mounting material is used, ensure that the mounting remains as safe as the mounting designed by the manufacturer. The specifications for stationary use of the Extension Unit must not be exceeded. Ensure that the static and dynamic strengths are adequate for the environmental conditions of the site. The mounting itself must not vibrate, swing or move in any way that might cause damage to the Extension Unit.
7. **Notice**: Observe all additional rules or restrictions regarding mounting that apply to specific Extension Unit types. For details refer to the mechanical specifications in the data sheet for the unit. Install the unit vertically with the fan unit at the top. A maximum tilt angle of 25° from a vertical position must be maintained, as shown in the following illustrations:

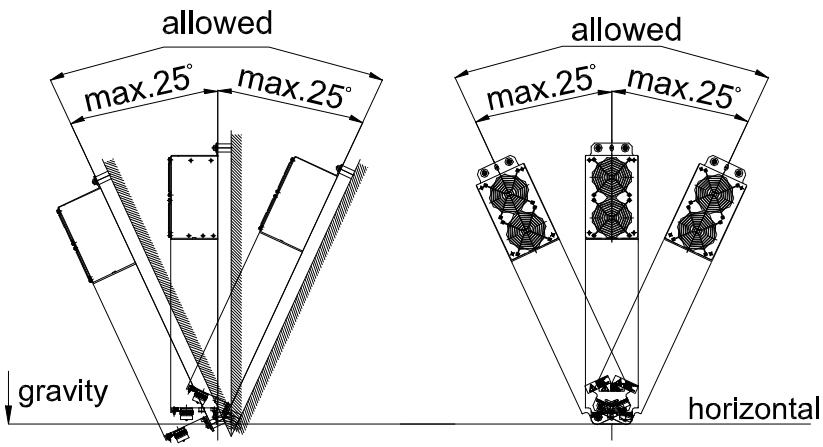

8. **Notice**: A spacing of 50 mm (1.97 inch) around the unit is required.
9. **Notice**: To ensure sufficient airflow when mounting the unit in enclosed spaces, two lid openings (one for the air inlet and the other for the air outlet) must be provided. Do not block these air inlets and outlets when mounting the Extension Unit. The size of each opening must equal at least 18 x 18 cm (> 300 cm2). Ensure that there is no thermal short circuit between the air inlet and air outlet. Make sure free airflow is not deflected or otherwise obstructed.

Specified torques must be observed for certain mounting procedures according to the following table:

Type	***Tallow-drop screws***	***Hex nuts***	***Screw band lock***	***Spacing bolts***		***PG (plastic)***	***PG (alum.)***
Thread	M 4	M 8		M 4	M 8	PG 13.5	PG 29
Specified torques	3.3 N-m	27 N-m	6 N-m	2.3 N-m	27 N-m	3.75 N-m	10 N-m

table 4-1 Specified torques

4.2.3. Mounting distance between RU and EU

The Extension Unit has to be connected to the Remote Unit via cable bridge. The length of the cable bridge determines the maximum mounting distance between the Remote Unit and the Extension Unit.

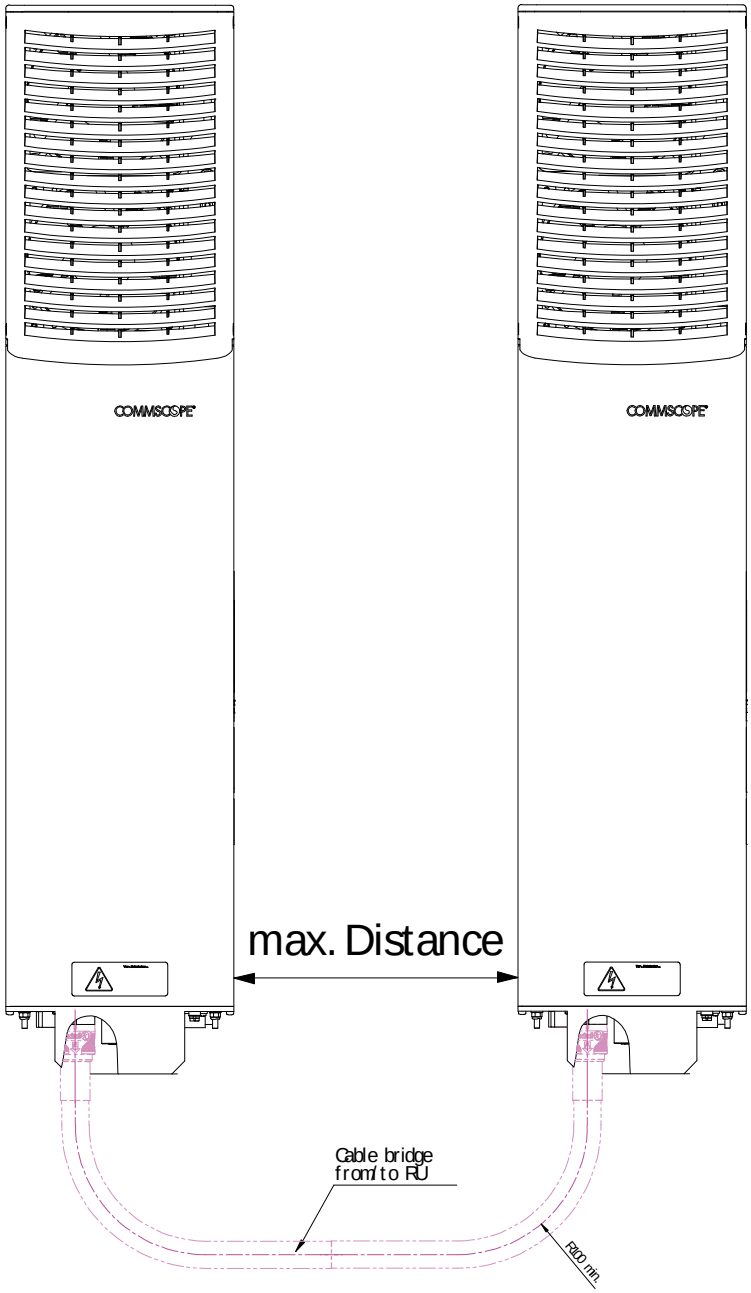

Length	Distance
420 mm	45 mm / 1.77”
1200 mm	825 mm / 32.48”
2000 mm	1625 mm / 63.97”

figure 4-1 Maximum distance between RU and EU

4.2.4. Wall mounting procedure

Notice: It is the responsibility of the installer to verify that the supporting surface will safely support the combined load of the electronic equipment and all attached hardware and components and to ensure that the EU is safely and securely mounted.

1. Mark the position of the drilling holes (for pitches refer to figure 4-2 Wall mounting). Drill four holes at the marked positions and insert dowels*.

2. Mount the brackets (A) to the wall using the M8x80 screws (B), split lock washers (C), and washers (D).

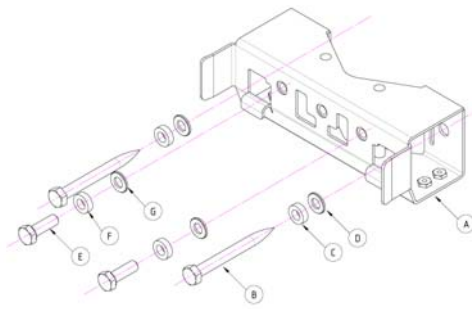

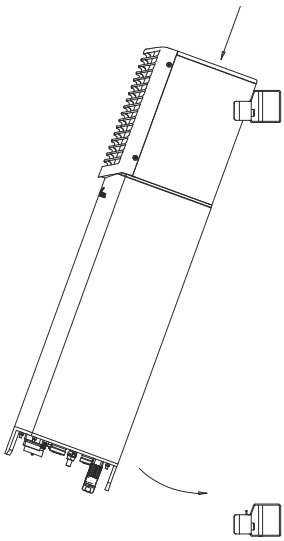

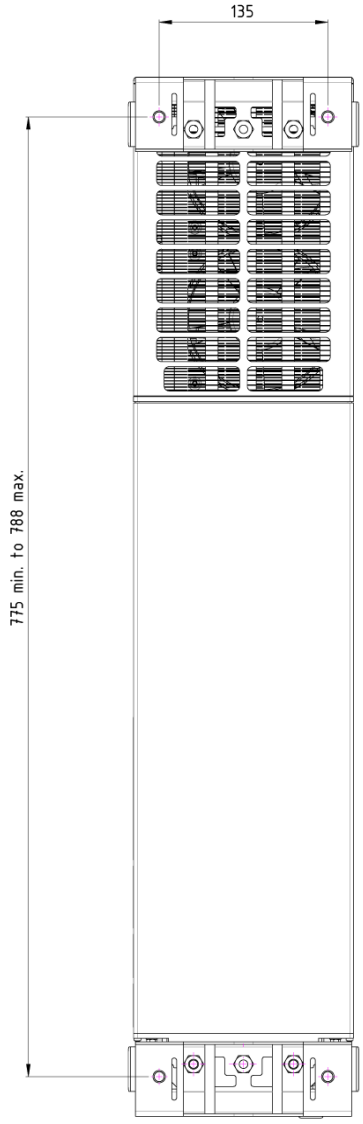

figure 4-2 Wall mounting – pitches

3. Hang the Extension Unit into the upper bracket, insert it to the lower bracket, and fasten it to the lower bracket with the M8x25 screws (E), split lock washers (F), and washers (G).

* The dowels are not included with the delivery because the suitable type depends on the on-site conditions (material of wall).

4.2.5. Pole mounting procedure with screw bands

Standard mounting hardware cannot be used to mount the Extension Unit to a pole, a column, or other similar structures. Additional hardware must be used for this type of installation. The pole-mounting kit includes

- two mounting brackets with screw bands, (worm gear) clamps to mount the brackets to the pole
- and two M8x25 screws, flat washers, and split lock washers per bracket to attach the Extension Unit to the bracket.

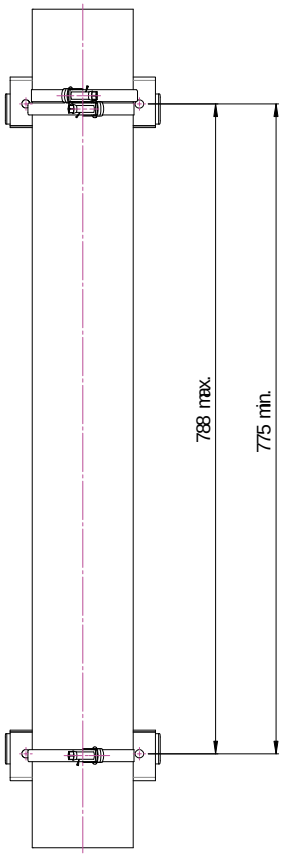

figure 4-3 Pole mounting – pitches

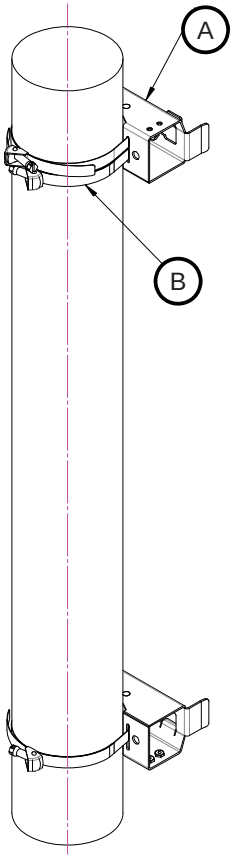

figure 4-4 Pole mounting – screw bands

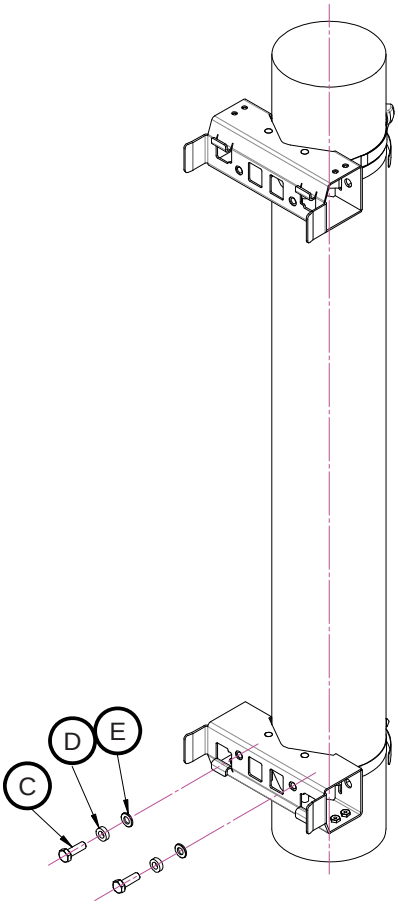

figure 4-5 Pole mounting – fasten EU

1. Use two screw bands (B) for the upper and one for the lower bracket to fasten the two brackets (A) to the pole.

2. Place the bands around the pole or post and feed the loose end into the lock and tighten the slotted screw securely. When the screw is turned clockwise, it acts as a worm drive pulling the threads of the band causing the band to tighten around the pole.

Note: When fastening the brackets make sure that they are installed congruently and not at an angle to each other. To determine the distance between the clamps refer to figure 4-3 Pole mounting – pitches.

3. Hang the Extension Unit into the upper bracket, insert it into the lower bracket, and fasten it to the lower bracket with the M8x25 screws ©, split lock washers (D) and washers (E), see chapter 4.2.4.

The maximum diameter of the pole or column must not exceed 120 mm (4.7 inch).

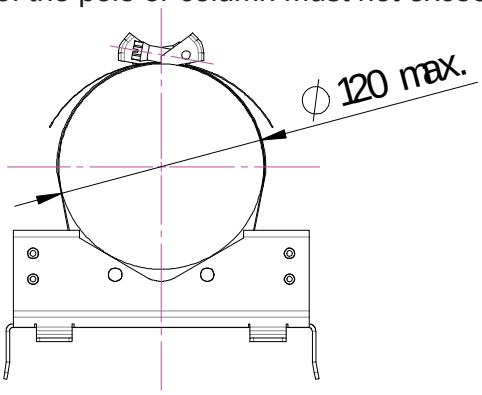

figure 4-6 Pole mounting – max. diameter

4.2.6. Pole mounting procedure with brackets

The pole-mounting kit with brackets includes

- two mounting brackets (A), two counter brackets (B), four threaded bolts (C), flat (F) and split lock (G) washers, hexagon (E) and locking (D) nuts to mount the brackets to the pole
- and two M8x25 screws (H), flat (F) and split lock (G) washers to attach the Extension Unit to the bracket.

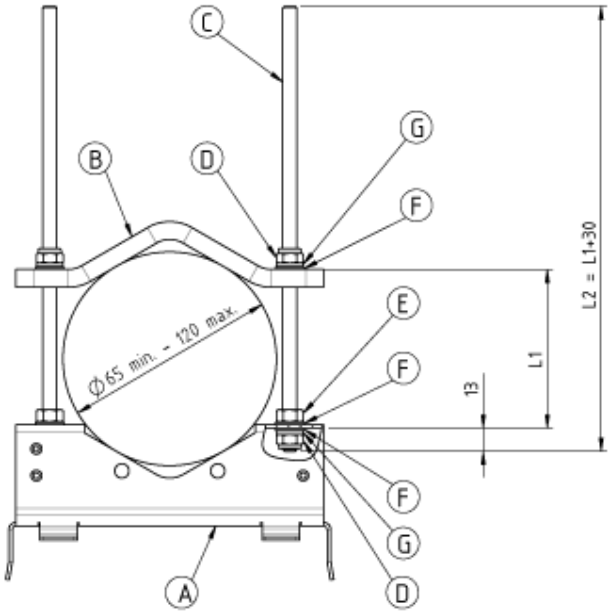

figure 4-7 Pole mounting – with brackets

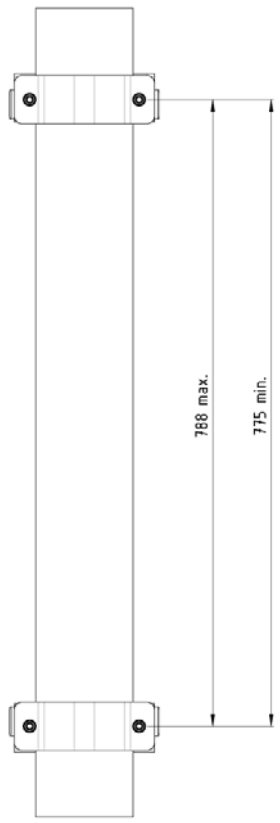

figure 4-8 Pole mounting – pitches

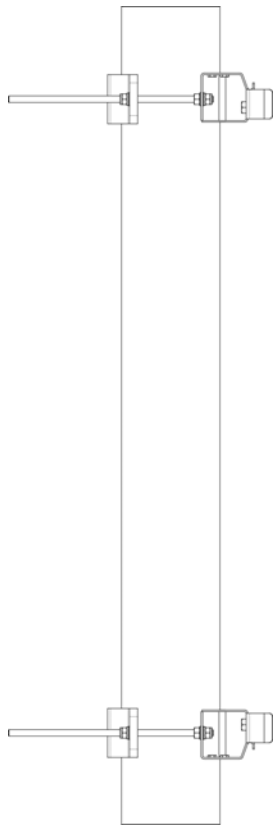

figure 4-9 Pole mounting – brackets

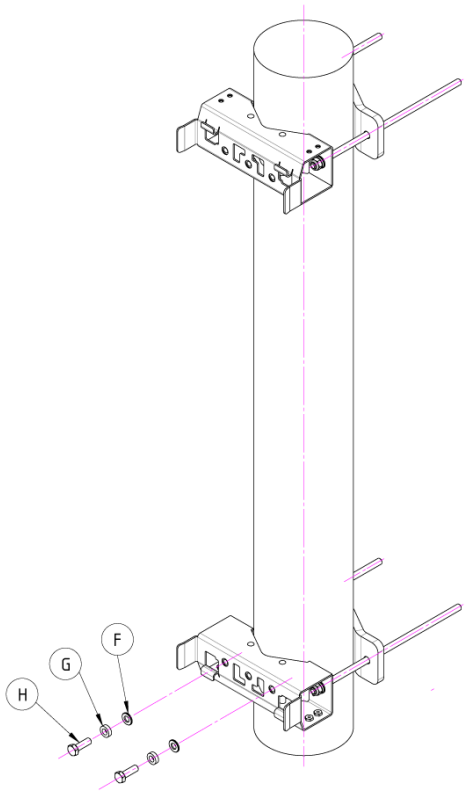

figure 4-10 Pole mounting – fasten EU

1. Apply this procedure to both mounting brackets on both sides:
   Screw a hexagon nut (E) to the threaded bolt and place a flat washer (F)) on it. Insert this side of the bolt into the mounting bracket (A). Then, fasten the mounting bracket with a flat washer (F), split lock washer (G), and the locking nut (D). See figure 4-7 Pole mounting – with brackets.

2. Place the pre-mounted brackets with threaded bolts to the pole or post, slide the counter bracket (B) on the threaded bolts and fasten the kit with a flat washer (F), split lock washer (G), and the locking nut (D).

Note: When fastening the brackets make sure that they are installed congruently and not at an angle to each other. To determine the distance between the clamps refer to figure 4-8 Pole mounting – pitches.

3. Hang the Extension Unit into the upper bracket, insert it into the lower bracket (see chapter 4.2.4), and fasten it to the lower bracket with the M8x25 screws (H), split lock washers (G), and flat washers (F).

The diameter of the pole or column must be in the range from 65 to 120 mm (2.6 to 4.7 inch).

4.3. Electrical Installation

4.3.1. Health and Safety for electrical installation

Read and observe the notices in chapter 1.2 Health and Safety.

1. **Danger: Electrical hazard. Danger of death or fatal injury from electrical current. Obey all general and regional installation and safety regulations relating to work on high voltage installations, as well as regulations covering correct use of tools and personal protective equipment.**

4.3.2. Property Damage Warnings for electrical installation

1. **Attention:** It is compulsory to ground (earth) the unit before connecting the power supply. A grounding bolt is provided on the cabinet to connect the ground-bonding cable.
2. **Attention:** If the mains connector of the Extension Unit is not easily accessible, a disconnect device in the mains power circuit must be provided within easy reach.
3. **Attention:** A connection of the mains supply to a power socket requires the power socket to be nearby the Extension Unit.
4. **Attention:** Before connecting or disconnecting the mains connector at the Extension Unit, ensure that mains power supply is disconnected.
5. **Attention:** Make sure that an appropriate circuit breaker acting as a disconnect device (as required by IEC/EN60950-1) and an overcurrent limiting device are connected between mains power and the Extension Unit.
6. **Attention:** Incorrectly wired connections can destroy electrical and electronic components.
7. **Notice:** To avoid corrosion at the connectors caused by electrochemical processes, the material of the cable connectors must not cause a higher potential difference than 0.6 V (see electrochemical contact series).
8. **Notice**: Use an appropriate torque wrench for the coupling torques:
   - for 7/16 DIN-type (25 N-m / 19 ft lb) with 1 ¼ in opening,
     e. g. item no. 244377 available from the CommScope e-catalog
   - for 4.3-10 type connectors (5 N-m, 44 in lb) with 22 mm (7/8) in opening, e.g. item no. TW-4310

   Do NOT use your hands or any other tool (e.g. a pair of pliers). This might cause damage to the connector and lead to a malfunction of the Extension Unit.
9. **Notice:** For unstabilized electric networks, which frequently generate spikes, the use of a voltage limiting device is advised.
10. **Notice:** Observe the labels on the front panels before connecting or disconnecting any cables.
11. **Notice:** Unused connectors must be closed with their protective covers to ensure water tightness.

4.3.3. Connections

The ION-U EU ports and connectors shown below are located at the base of the EU.

figure 4-11 ION-U EU H 7P/80-85P/17(E)P/19P AC version connector flange

ION-U High Power EU Connectors/Indicators			
	Port/Conn	**Purpose**	**Type**
A	EXPANSION	This connector is used to interconnect to the Remote Unit to provide additional bands of coverage.	Radiall Opus M424400-003
B	ANT	This connector is used for transmitting and receiving signals to and from an antenna, antenna splitter, or cross-band coupler.	4.3-10 type female
C	STATUS	This LED provides a visual warning of an alarm condition. The color of the LED indicates the severity of the alarm.	LED
D	PROBE	This connector is used as measurement probe to antenna port.	QMA
E	Grounding Bolts	Ground (earth) bolts for connecting the mandatory ground cable to the EU.	M6 bolts, hex nut, & washers
F	MAINS	This connector provides the power to EU models that use standard AC (100 to 240 Vac) power.	Coninvers M17 –Series P20, 4-Pin

table 4-2 ION-U EU H connector flange

figure 4-12 ION-U EU H 7P/80-85P/17(E)P/19P DC version connector flange

ION-U High Power EU Connectors/Indicators			
	Port/Conn	**Purpose**	**Type**
	All, except MAINS	The connectors and indicators for the AC and the DC version are identical except for the MAINS connector.	
F	MAINS	This connector provides the power to EU models that use standard DC (-60 to -48 Vdc) power.	M6 bolts, hex nut, & washers

4.3.4. Grounding (Earthing)

The EU must be grounded (earthed).
When double grounding lugs are used they must support M6 studs with a stud hole spacing of 15.88 mm (5/8”).

1. Connect an earth-bonding cable to one or both of the grounding bolt connections provided on the connector flange of the Extension Unit. Do not use the grounding connection to connect external devices.

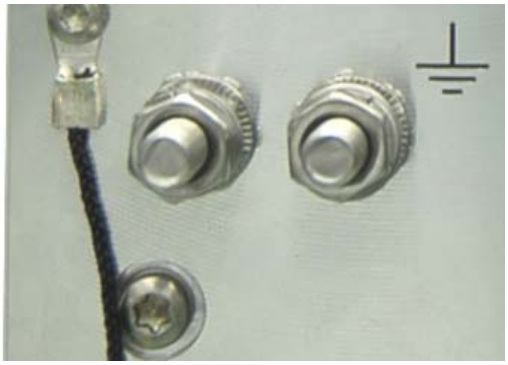

figure 4-13 Grounding bolts

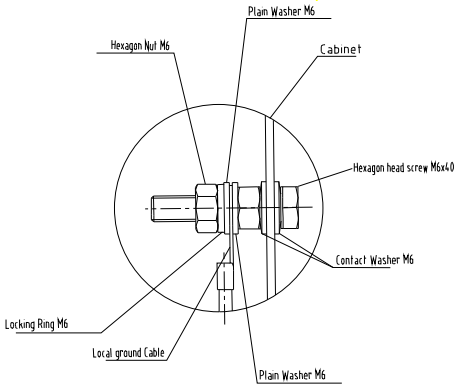

figure 4-14 Grounding bolt, schematic view

2. After loosening the hex nut(s), connect the earth-bonding cable between the two washers as illustrated in the figures above.
3. Then, fasten all parts again by tightening the hex nut(s).
4. Connect the other end of the ground wire to a suitable permanent ground.

Note: Ground of a second unit (for example RU + EU) has to be connected to the same equipotential bonding terminal as the Remote Unit. Use bonding cables of the same length, as short as possible, and with a large wire cross section. Follow local electrical code practices.

4.3.5. Connection of the antenna cable

The Extension Unit has 4.3-10 type antenna connectors labelled “ANT”.

When attaching the antenna cable connector, it is recommended to refer to the corresponding documentation of the connector manufacturer. The bending radius of the antenna cable must remain within the given specifications.

The selection of cable and antenna is an important consideration. On the one hand, a cable with higher loss is less expensive but, on the other hand, it impairs performance.

Notice: Use an appropriate torque wrench for the coupling torques:

- for 7/16 DIN-type (25 N-m / 19 ft lb) with 1 ¼ in opening, e. g. item no. 244377 available from the *CommScope e-catalog*
- for 4.3-10 type connectors (5 N-m, 44 in lb) with 22 mm (7/8) in opening, e.g. item no. TW-4310

Do NOT use your hands or any other tool (e.g. a pair of pliers). This might cause damage to the connector and lead to a malfunction of the Extension Unit.

Attention: To minimize passive inter-modulation (PIM) distortion, attention has to be paid to the physical condition of the connector junctions:

- Do not use connectors that show signs of corrosion on the metal surface.
- Prevent the ingress of water or dirt into the connector.
- Use protective caps for the connectors when not mounted.
- Before mounting clean the connectors with dry compressed air.
- Before mounting clean the mating surfaces of the connector with a lint-free alcohol-drenched cloth on a wooden or non-metallic item.
- Attach and torque the connectors properly.
- Avoid metallic abrasion when mounting the connectors by only screwing the connecting nut, but not turning the whole connector.
- Use a torque wrench to fasten the connector, see above.
- Clean the protective caps before mounting for antenna cable replacement.

4.3.5.1. Cleaning procedure for RF cable connectors

The figures in this chapter illustrate the cleaning procedure and do not show the actual EU.

1. What is needed for the cleaning?
   a. Isopropyl alcohol
   b. Compressed air
   c. Lint-free wipe
   d. Cotton buds

2. Remove protective cap from the RF connector.

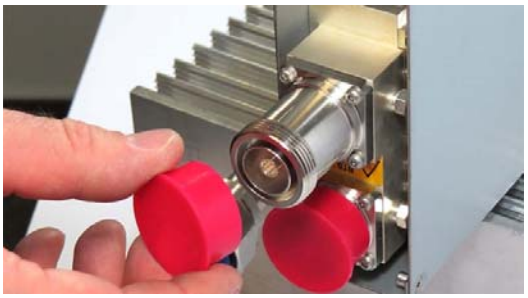

Caution: Risk of injury by flying particles when compressed air is used. Wear protective clothing, especially protective glasses.

3. Remove metal chips and small particles from the mating and inner surfaces of the connector using compressed air.

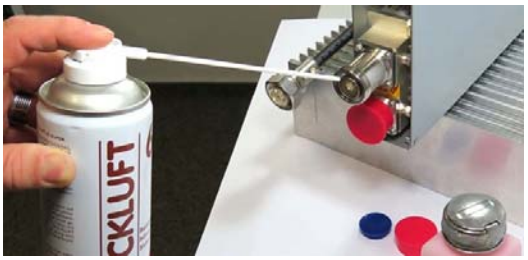

Warning: Flammable material. Risk of fire. Keep away from sources of ignition.

Caution: Eye irritant product. Risk of eye irritation. Avoid contact with eyes and skin. Wear protective clothing, especially protective glasses.

4. Clean the connector winding with lint-free wipe drenched with isopropyl alcohol.

5. Clean the lip of the inner ring with a cotton bud drenched with isopropyl alcohol.

6. Clean the inside surface of the inner ring with a cotton bud drenched with isopropyl alcohol.

7. Clean the inside of the center conductor spring tines with a cotton bud drenched with isopropyl alcohol.

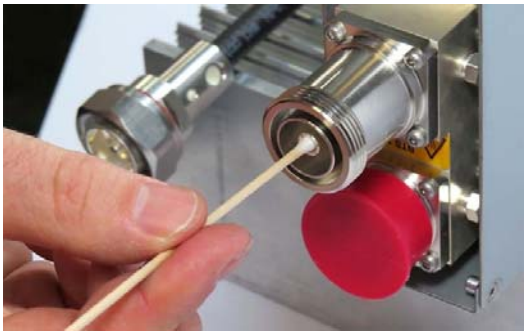

8. Clean in the similar way the connector of the connected cable. Remove protective caps from the unit connector first.

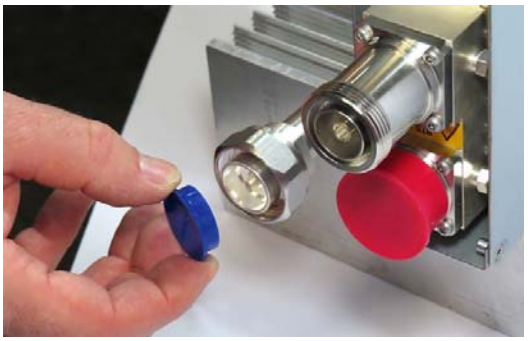

9. Remove metal chips and small particles from the mating and inner surfaces of the connector using compressed air.

10. Continue with the winding area using lint-free wipe drenched with isopropyl alcohol.

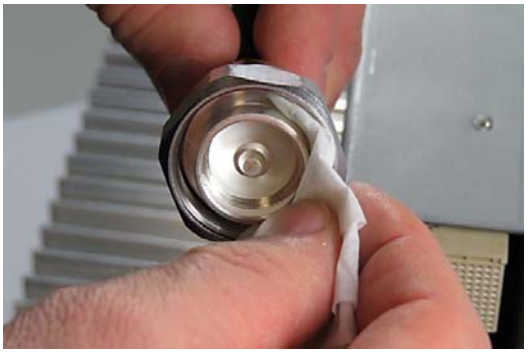

11. Continue with the inside mating surface of the inner ring.

12. Clean the outside surface of the center pin.

4.3.5.2. Antenna cable connector assembly

1. What is needed for the connector assembly?
    a. Torque wrench.
    b. (Adjustable) counter wrench

B0409ACA

2. Join the connectors and turn the coupling nut until the thread grips.

B0409ADA

3. Push in the connector until it clicks.

B0409AFA

4. Fasten the coupling nut hand-tight. Do not turn the connector but the coupling nut only.

B0409AGA

5. Retain the cable connector with the counter wrench and fasten the coupling nut with the torque wrench until the torque is applied (torque wrench clicks).

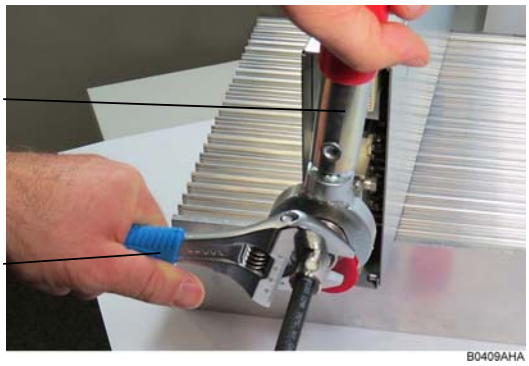

For angled antenna connectors use your hand to retain the cable connector and fasten the coupling nut with the torque wrench. Make sure only the coupling nut is turned, not the cable connector.

4.3.6. Mains power connection

Before connecting electrical power to the unit, the system must be grounded as described in the previous chapter.

Mains power must be connected at the mains connector of the unit.

4.3.6.1. Mains power connection AC

1. Take the Mains power cable that was delivered with the EU.
2. Locate or install a suitable power junction box or receptacle near the EU and route the power cable from the power source to the EU. Do not connect the cable to the EU's Mains connector at this time. The power source must be interruptible.
3. The Mains cable must be properly secured observing local regulations and electrical codes. Be sure to allow enough slack in the cable at the EU to plug or unplug the cable into the Mains connector of the EU.
4. Wire the power cable to the junction box or receptacle. Refer to the color code and pin numbers shown in figure 4-16 (AC cable), and table 4-3.
5. With the cable's Mains plug disconnected from the EU, turn the circuit breaker on, unscrew the plug's protective cover, and carefully test the plug with a voltmeter to ensure that the voltage and polarity are correct.
6. Once the testing has been completed, turn off the circuit breaker.
7. Unscrew the protective cover from the Mains connector of the EU (figure 4-15).
8. Insert the plug into the Mains connector and tighten the clamping ring until it is hand tight. Do not over-tighten the clamping ring.

figure 4-15 Mains power connector

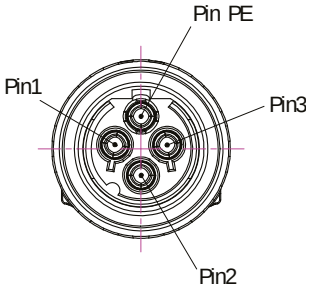

figure 4-16 Mains power cable – AC

The Mains cable is part of the delivery. It's available in two wiring configurations:

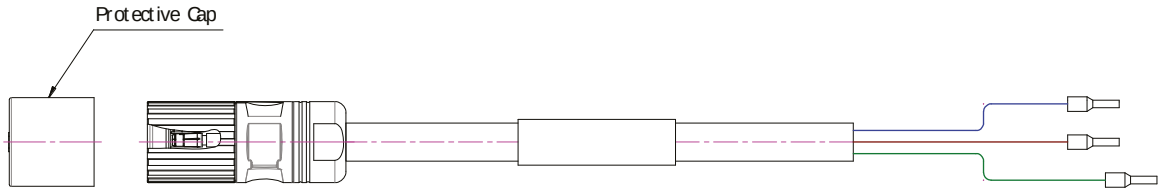

Wiring 1		
Pin	**Name**	**Color**
1	Phase	Black
2	Neutral	White
3	n.c.	n.c
PE	Ground	Green

Wiring 2		
Pin	**Name**	**Color**
1	Phase	Brown
2	Neutral	Blue
3	n.c.	n.c
PE	Ground	Green/Yellow

table 4-3 AC power cable pinning

For the AC power supply connection, a minimum cross section of 1.5 mm^2 is required. Each wire must observe the applicable national regulations regarding loop impedance, voltage drop, and methods of installation. Make sure to connect the correct voltage to the unit.

Note: Do not connect or disconnect the power cord at the mains connector while power is on. Turn off mains* power before connecting the power cord at the Extension Unit, then, engage mains again.

* Mains power must be interrupted with an external mains breaker. For the mains breaker, observe the following recommendation:

120 Volt / 20 Amp max. or 240 Volt / 16 Amp, single-phase, 50 / 60 Hz AC service is needed, i.e. the external AC breaker should be 20 Amps max. for 120-Volt service or 13 – 16 Amps for 240-Volt service.

4.3.6.2. Mains power connection DC

Caution: Danger of electrical hazard by high current. Disconnect mains power before opening the DC connector housing.

Note: The Mains cable must be properly secured observing local regulations and electrical codes. Be sure to allow enough slack in the cable at the EU to mount or dismount the cable into the DC Mains connector of the EU.

Unscrew the two M3 x 12 captive screws and take off the cover from the DC Mains connector housing. At the EU housing the cover is inserted into a recess, so first lift the cover at the front and carefully pull it out from the recess. Then remove the rubber plug.	
Double lug DC cable connectors need to be M6 with a stud hold spacing of 15.88 mm (5/8”).	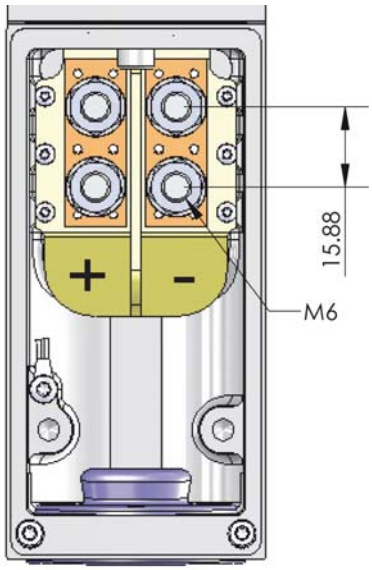

First, install a conduit fitting (not contained in scope of delivery) to the 34.52 mm hole. This must be a suitable fitting for a 1 Inch conduit with lock nut. Inside, the clearance around the hole is 5 mm, the maximum space for the nut is 8 mm. Then, insert your wiring through the opening and mount it to the M6 mains terminals. Observe the correct polarity. Close the conduit fitting to ensure water tightness. For strain release, two M5 threaded holes are provided; the distance between the threaded holes is 34.5 mm.	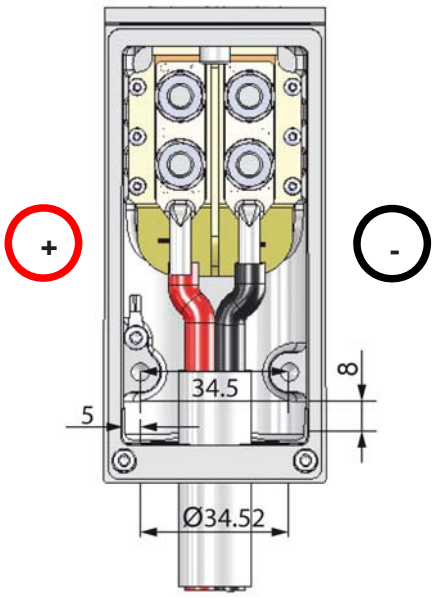
Mount the housing cover by inserting it into the recess at the repeater cabinet and fastening the two M3 x 12 captive screws.	

Attention: For the DC power supply connection, a minimum cross section of 6.6 mm^2 (≤ AWG 9) per potential is required. Each wire must observe the applicable national regulations regarding loop impedance, voltage drop, and methods of installation. Make sure to connect the correct voltage to the unit. To ensure water-tightness of the unit, use the correct size of cable gland.

Note: Do not connect or disconnect the power cord at the mains connector while power is on. Turn off mains* power before connecting the power cord at the Extension Unit, then, engage mains again.

* Mains power must be interruptible with an external mains breaker (40 A). For the mains breaker, observe the local regulations of the DC provider.

4.3.7. Extension Unit port connection

The EU connector is used to connect a cable bridge to the Remote Unit. This port provides control and RF signaling to and from the Extension Unit.

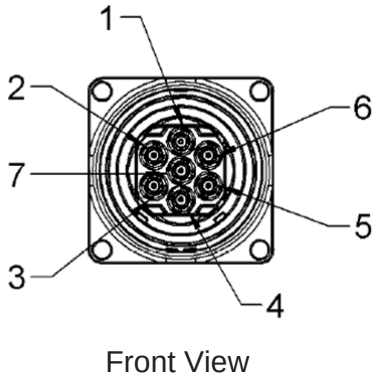

figure 4-17 EU (Extension Unit) connector

7-Pin	
Pin	**Assignment**
1	RF
2	n.c.
3	System Bus
4	RF (if Pin installed)
5	System Bus
6	n.c.
7	RF

table 4-4 EU connector pinning

Attention: The cable bridge connector is a push-pull connector. Ensure not to insert it at an angle into the EU connector. The connector coupler has to be inserted before the Pin-holder is pushed in. Otherwise the connectors might be damaged.

The cable bridge connector provides two notches, the EU connector two noses.

figure 4-18 EU connector and cable bridge

figure 4-19 Mounting the EU cable bridge

Take the cable bridge connector at the connector coupler and insert it carefully to the EU connector. Use the green markings to align the connector, turn it without pressure until the noses catch the notches and carefully push it at right angle into the connector.	Then take the cable bridge connector (Pin-holder) and push it into the EU connector until the lock clicks. The red 'UNLOCK' marking must be completely covered by the connector coupler.

4.3.8. Coupling probe

The coupling probe is a QMA measurement probe that allows the measurement of the antenna output without disconnecting the antenna. The coupling is as follows:

Port	Coupling dB typ.
700 MHz	57
800/850 MHz	56
1900 MHz	50
1700 MHz	48

4.4. Commissioning Flow-Chart

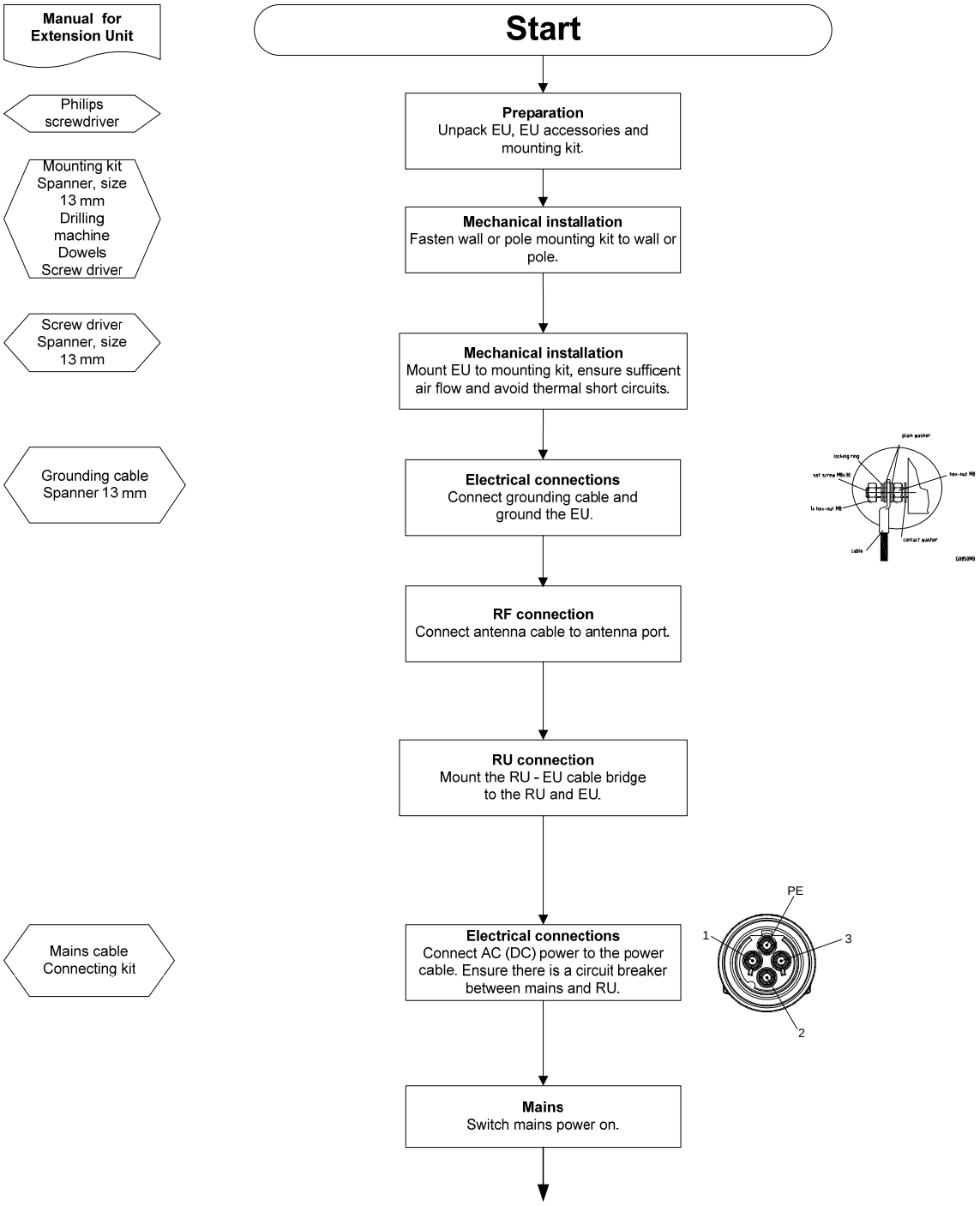

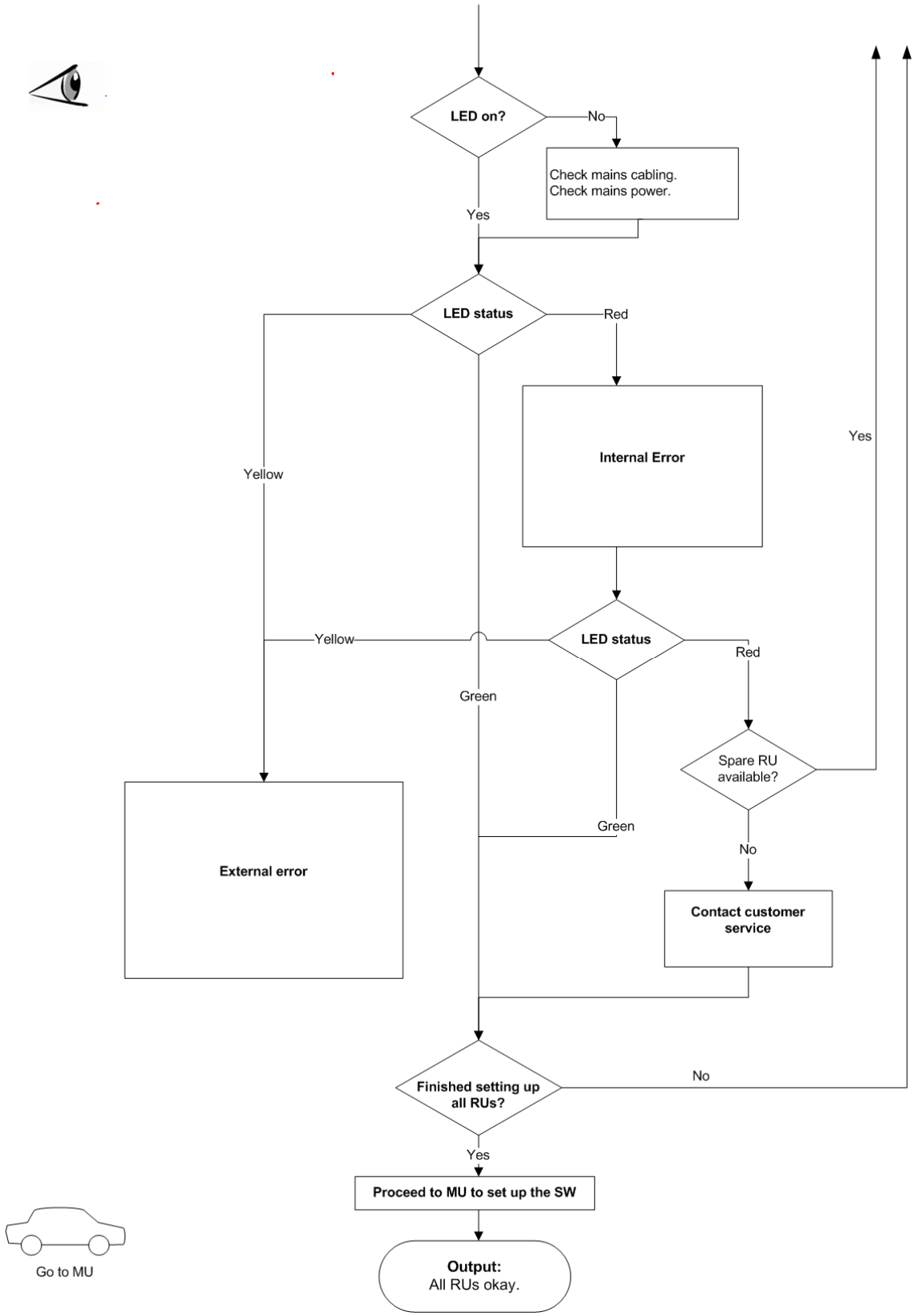
LED on?
No
Check mains cabling.
Check mains power.
Yes
LED status
Red
Internal Error
Yes
Yellow
Yellow
LED status
Red
Green
Spare RU available?
Green
No
External error
Contact customer service
Finished setting up all RUs?
No
Yes
Proceed to MU to set up the SW
Output:
All RUs okay.
Go to MU

5. Alarms

5.1. Bite and Alarms

The Built-In Test concept comprises the monitoring of the power supplies, the power amplifiers, and fan units.
All occurring alarms can be checked via software at the Master Unit.

As soon as the software acknowledges a valid alarm, a message is transmitted to the Master Unit.

If the reason for the alarm has been cleared or if the alarm should continue, a new alarm message will not be repeated. If there was an interruption of at least five seconds after acknowledgement, a new alarm message will be generated.

5.2. Troubleshooting

The status of the Extension Unit can be checked via the Master Unit (for details please refer to the ION-U Site Manager software manual). Locally, the status can be checked at the LED.

5.3. Status LED Alarms

For local supervision, a status LED on the connector flange of the Extension Unit provides a visual indication of possible reasons for alarms. The color of the LED indicates the severity of the alarm. Detailed alarm information is available through the ION-U software interface.

Status LED Indication	***Alarms***	***Possible on-site measures***
Green	No alarm → Status ok	
Red	Hardware failure	Reboot the EU via SM software or reboot the EU by shortly interrupting mains supply.
Status LED off	Mains	Check mains cabling. Check mains power.

6. Maintenance

6.1. General

Read and observe the notices in chapter 1.2 Health and Safety.

Caution: Rotating fans. Risk of injury in operation. Wear tight-fitting clothes and disconnect mains before connecting or replacing or cleaning the fan unit.

Caution: The unit reaches high temperature in operation. Risk of burns by hot surface. Do not touch the unit before it has sufficiently cooled down.

Note: The Extension Unit does not require preventative maintenance measures.

Note: We recommend checking the cleanliness of the unit and in particular of the heat sink / fan(s) at appropriate intervals depending on the degree of dust and dirt at the installation site. If necessary, any dusty or dirty areas / parts should be cleaned at regular intervals, which also depend on the degree of dust and dirt at the installation site.

Maintenance of the ION-U High Power Eus should be performed by replacing only components that are described in this chapter. In order to maintain the warranty, avoid unintentional damage to the seals on the modules.

Unless otherwise agreed to in writing by CommScope, CommScope's general limited product warranty (http://www.commscope.com/Resources/Warranties/) shall be the warranty governing the Extension Units, including the installation, maintenance, usage and operation of the Extension Units.

Note: When sending back the unit, use appropriate packaging. Use of the original packaging for shipping the unit is strongly recommended.

Note: Defective parts should only be replaced by original parts from the supplier. All service work performed inside the housing is performed at the users own risk.

Note: Ensure the Extension Unit has been disconnected from mains power during maintenance.

Note: Label any unlabelled cables before disconnecting them to ensure correct reconnection.

For most maintenance procedures, appropriate tools are required to ensure correct handling. All of these tools can be ordered from the supplier.

Note: All Extension Unit screws have a right-hand thread, and are tightened by turning the screws clockwise and loosened by turning them counter-clockwise with an appropriate tool.

Due to the design of the Extension Unit, the fan unit is the only component that should be replaced in the field. Please contact the supplier for replacement of any other components.

6.2. Replacing the Fan Unit

Replacement of the fan unit is not required as a preventative measure. Only when an alarm indicates a malfunctioning of a fan, must the unit be exchanged.

Note: Please observe that the fan unit can only be replaced as a whole. Do not remove the fans separately.

Read and observe chapter 1.2 Health and Safety as well as the instructions in chapter 6.1 General before starting with the replacement.

1. Switch off the Extension Unit. Make sure that mains power is disconnected for the following replacement procedure. Then, proceed as follows:

2. Unscrew the four Pan-head screws (two at each side of the cabinet) and remove the fan cover.

3. Unscrew and disconnect the fan connector and unscrew the four Pan-head screws the fan plate is fastened to the cabinet. Take out the fan unit, replace it by the new one, fasten the four Pan-head screws for the fan unit, re-connect the fan connector and mount the cover to the cabinet.

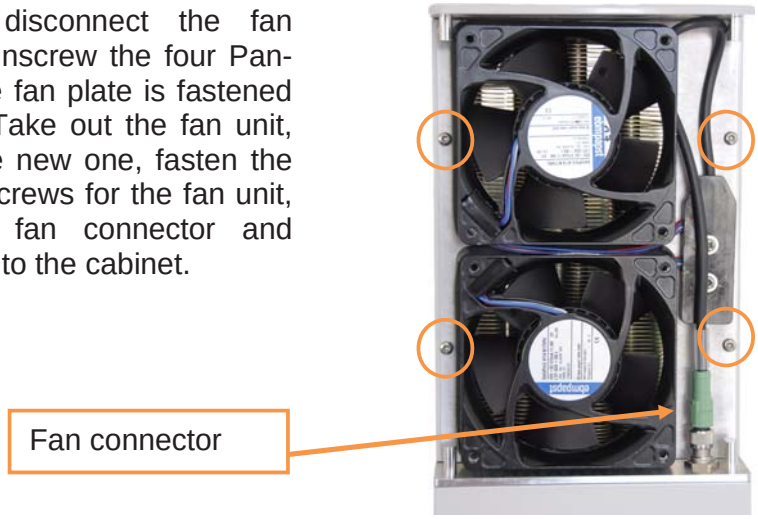

6.3. Cleaning the Heat Sink

Note: Read and observe chapter 1.2 Health and Safety as well as the instructions in chapter 6.1 General before starting with the replacement procedure. Then, proceed as follows:

1. Switch off the Extension Unit. Make sure that mains power is disconnected for the following procedure.

2. Remove the fan cover and fan unit from the Extension Unit as described in chapter 6.2 Replacing the Fan Unit.

Caution: Risk of injury by flying particles when compressed air is used. Wear protective clothing, especially protective glasses.

3. Use compressed air (max. 5 bars) to blow out any dust, dirt, or other debris in the heat sink from back to front.

4. If the dirt cannot be blown out completely and parts of it stick to the ribs of the heat sink, clean the parts concerned carefully from the front using e.g. a brush. Take care that the heat sink material is not scratched or damaged.

5. After cleaning the heat sink, remount the fan unit according to chapter 6.2 Replacing the Fan Unit. Then, switch the Extension Unit back on.

7. Appendix

7.1. Illustrations

figure 7-1 ION-U EU H 7P/80-85P/17(E)P/19P required space

7.2. Specifications

This manual is valid for the following Extension Units:

ID No	Denomination
7698401-xxxx*	ION-U EU H 7P/80-85P/17P/19P
7698401-0001	ION-U EU H 7P/80-85P/17P/19P AC
7698401-0002	ION-U EU H 7P/80-85P/17P/19P DC
7698401-0003	ION-U EU H 7P/80-85P/17EP/19P AC
7698401-0004	ION-U EU H 7P/80-85P/17EP/19P DC

* The xxxx suffix is the identifier for the specific configuration of the Extension Unit.

Please refer to the ION-U EU H 7P/80-85P/17(E)P/19P data sheet for the ION-U HP EU specifications.

7.3. Spare Parts

Maintenance of the EU should be performed on an FRU (Field Replaceable Unit) basis only. If any FRU not contained in the following list needs to be replaced, please contact customer service for additional instructions.

Designation:	ID No
Fan Unit M2-Cabinet	7661556-xx
Pole-mounting kit M2-cab*	7661538
Pole-mounting kit M2-cab with brackets*	7690784
Wall-mounting kit M2-cab*	7661581

* One of the three mounting kits has to be ordered separately. They are not contained within the standard equipment.

The manufacturer reserves the right to replace the spare parts listed above by equivalent substitutes.

Note: Only the spare parts listed above are FRUs and can be replaced by the user. For replacement of any other parts, please send the entire Extension Unit back to the manufacturer.

7.4. List of Changes

Version	Changes	Release Date
M0200A9B		30-June-2015
M0200A9C	- chapters 1.3 and 4.3.2 updated, duplicate warning removed - chapter 1.4 adjusted, single carrier and Class B - chapters 4.1 and 6.1 updated, warranty and mounting kits - chapter 4.2.2 updated, 50 mm distance - chapters 4.3.2 and 4.3.5 updated, no N connector, 4.3-10 torque wrench - chapter 4.3.5.1 updated, warnings - chapter 6.3 updated, warning - chapter 7.3 updated, EU IDs - chapter 7.3 updated, mounting kits	23-November-2015
M0200A9D	ION-U EU H 7P/80-85P/17EP/19P added	Not yet released

8. Index

A

Alarms
- Bite and Alarms 41
- EU 41
- Handling of Alarms 41
- List 41
- Status LED 41

ANT RF 25

B

Block Diagram
- ION-U EU H 7P/80-85P/17(E)P/19P 15

C

CE Declaration of Conformity (DoC) 11
Cleaning the Heat Sink 44
Commissioning
- General 16

CommScope 11
Compliance 8
Connections
- Antenna 28
- Connector Panel 24

Connectors
- DC Mains 26
- Probe 25

Contact Addresses, Customer Support 12, 13
Coupling Port 38

D

DC Mains Connector 35
Declaration of Conformity (DoC) 11

E

Extension Unit connector 25
Extension Unit Port 37

G

Grounding (Earthing) 27
Grounding Bolt 25

H

Health and Safety 7

I

Illustrations 45
Installation
- Distance between Units 18
- Electrical 23
- Mechanical 16

M

Mains Connector 25, 33
Mains Power Connection 33
Maintenance 42
Mounting
- Pole with brackets 21
- Pole with screw bands 20
- Wall 19

P

Pole Mounting 20, 21
Property Damage Warnings 7

R

Replacement of Fan Unit 43

S

Spare Parts 46
Status LED 25

T

Troubleshooting 41

W

Wall Mounting 19

COMMSCOPE®