COMMSCOPE®

ION®-U

ION-U EU L 17EP/17EP

User's Manual

M0200AJA

DISCLAIMER:

This document has been developed by CommScope, and is intended for the use of its customers and customer support personnel. The information in this document is subject to change without notice. While every effort has been made to eliminate errors, CommScope disclaims liability for any difficulties arising from the interpretation of the information contained herein. The information contained herein does not claim to cover all details or variations in equipment, nor to provide for every possible incident to be met in connection with installation, operation, or maintenance. This document describes the performance of the product under the defined operational conditions and does not cover the performance under adverse or disturbed conditions. Should further information be desired, or should particular problems arise which are not covered sufficiently for the purchaser's purposes, contact CommScope.

CommScope reserves the right to change all hardware and software characteristics without notice.

COPYRIGHT:

© Copyright 2018 CommScope Inc. All Rights Reserved.

This document is protected by copyright. No part of this document may be reproduced, stored in a retrieval system, or transmitted, in any form or by any means, electronic, mechanical photocopying, recording, or otherwise without the prior written permission of CommScope.

TRADEMARKS

All trademarks identified by ® or ™ are registered trademarks or trademarks, respectively, of CommScope. Names of products mentioned herein are used for identification purposes only and may be trademarks and / or registered trademarks of their respective companies.

Andrew Wireless Systems GmbH, 02-May-2018

TABLE OF CONTENTS

1. GENERAL 7

1.1. USED ABBREVIATIONS 7

1.2. HEALTH AND SAFETY 8

1.3. PROPERTY DAMAGE WARNINGS 8

1.4. COMPLIANCE 9

1.5. ABOUT COMMSCOPE 13

1.6. INTERNATIONAL CONTACT ADDRESSES FOR CUSTOMER SUPPORT 14

2. INTRODUCTION 16

2.1. PURPOSE 16

2.2. ION-U LOW POWER REMOTE/EXTENSION UNITS 16

3. FUNCTIONAL DESCRIPTION 17

3.1. GENERAL 17

3.2. SISO AND MIMO OPERATION 18

3.3. ION-U EU L 17EP/17EP PORTS 21

4. COMMISSIONING 23

4.1. LOW POWER EU MECHANICAL INSTALLATION 23
4.1.1. Health and Safety for mechanical installation 23
4.1.2. Property Damage Warnings for mechanical installation 23
4.1.3. Mounting bracket 24
4.1.3.1. Mount to a wall 24
4.1.3.2. Mount to a pole 25
4.1.4. Threaded pins 27
4.1.5. Wall mounting procedure – Single Unit 28
4.1.6. Wall mounting procedure – Dual Units 30
4.1.7. Pole mounting procedure – single and dual 34

4.2. LOW POWER EU ELECTRICAL INSTALLATION 35
4.2.1. Health and Safety for electrical installation 35
4.2.2. Property Damage Warnings for electrical installation 35
4.2.3. Connections 37
4.2.4. Grounding (Earthing) 38
4.2.5. Mains power connection 39

4.2.6. Antenna connection 42
4.2.6.1. Cleaning procedure for RF cable connectors 43
4.2.6.2. Antenna cable connector assembly 46
4.2.7. Expansion ports connections 48
4.2.8. Control connector RS-232 LOCAL- Local Interface 49
4.2.9. Control connector RS-232 CTRL 49

4.3. LOW POWER EU ALARMS 50
4.3.1. Bite and alarms 50
4.3.2. Status LED alarms 51

4.4. EXTERNAL ALARM INPUTS 52

4.5. TROUBLESHOOTING 52

5. LOW POWER EU MAINTENANCE 53

5.1. GENERAL 53

5.2. EU POWER SUPPLY REPLACEMENT 54

6. APPENDIX 58

6.1. ILLUSTRATIONS 58
6.1.1. Dimensions and Mounting 58
6.1.2. ION-U EU L Cable Kits 60
6.1.3. LP RU, EU L 25T/25T, and EU L 23/23 Ports 60

6.2. SPECIFICATIONS 63

6.3. SPARE PARTS 63

7. LIST OF CHANGES 64

8. INDEX 65

FIGURES AND TABLES

figure 3-1 ION-U EU L 17EP/17EP block diagram 17
figure 3-2 Remote Unit, SISO 18
figure 3-3 Remote Unit, MIMO two units paired 18
figure 3-4 One RU one EU one antenna RF 18
figure 3-5 Two RUs one EU two antennas RF 19
figure 3-6 Two RUs two EUs two antennas RF 19
figure 3-7 Two RUs three EUs (2300 MHz Optimized) RF 20
figure 3-8 Two RUs three EUs (RU band loss minimized) RF 20
figure 3-9 EU L 17EP/17EP connectors and Status LEDs 21
figure 4-1 Mounting bracket 24
figure 4-2 Pole-mounting kit 4” to 18” 26
figure 4-3 Pole-mounting kit 40” 26
figure 4-4 EU threaded pin power supply side 27
figure 4-5 EU threaded pin narrow side 27
figure 4-6 Place EU onto wall mounting bracket – single mount 28
figure 4-7 Install M6x12 screws and washers for single mount 29
figure 4-8 Attach M6 nut to threaded pins for single mount 29
figure 4-9 Completed single EU mount 30
figure 4-10 1st unit placed on wall mounting bracket 31
figure 4-11 Install M6x12 screws and washers 31
figure 4-12 Attach M6 nut to threaded pins 32
figure 4-13 2nd unit on wall mounting bracket 32
figure 4-14 Install M6x12 screws and washers 2nd unit 33
figure 4-15 Attach M6 nut to threaded pins for 2nd unit 33
figure 4-16 Completed dual unit mount 34
figure 4-17 Grounding bolts 38
figure 4-18 Grounding bolt, schematic view 38
figure 4-19 AC power cable 39
figure 4-20 DC power cable 39
figure 4-21 Vdc/100 power cable 40
figure 4-22 Connect mains plug 41
figure 4-23 Antenna connection 47
figure 4-24 Expansion ports 48
figure 4-25 RS-232 connector 49
figure 4-26 RS-232 connector 49
figure 5-1 Disconnect mains power 54
figure 5-2 EU power supply location 54
figure 5-3 8 EU power supply screws 55
figure 5-4 EU power supply with cables 55
figure 5-5 EU power supply input cable 55
figure 5-6 EU power supply output cable 56
figure 5-7 EU with power supply removed 56
figure 5-8 EU with replacement power supply 56
figure 5-9 EU insert power supply 57
figure 5-10 Reconnect mains power 57

figure 6-1 ION-U Low Power EU mounting bracket 58
figure 6-2 ION-U Low Power Unit dimensions 58
figure 6-3 Installation drawing of ION-U L Unit single 59
figure 6-4 Installation drawing of ION-U L Unit dual..... 59
figure 6-5 LP RU connectors and Status LED 60
figure 6-6 EU L 23/23 connectors and Status LEDs 61
figure 6-7 EU L 25T/25T connectors and Status LEDs..... 62

table 1-1 List of international contact addresses..... 15
table 4-1 Specified torques 24
table 4-2 AC power cable 39
table 4-3 DC power cable 39
table 4-4 Vdc/100 power cable 40
table 4-5 RS-232 connector, pin assignment..... 49
table 4-6 RS-232 connector, pin assignment..... 49
table 4-7 RS-232 LOCAL and CTRL connections 50
table 4-8 Status LED alarms..... 51
table 6-1 Extension Unit Cable kit..... 60

1. General

1.1. Used Abbreviations

AC/DC	Alternating current / Direct Current
ALC	Automatic Level Control
BITE	Built-In Test Equipment
BTS	Base Transceiver Station
CDMA	Code Division Multiple Access
CE	“Conformité Européenne” (“European Conformity”)
CPD	Channel Power Detection
DL	Downlink
DoC	Declaration of Conformity
EP	Extension Port
ESD	Electrostatic Discharge
EU	Extension Unit
GSM	Global System for Mobile Communication
GND	Ground (Earth)
GUI	Graphical User Interface
ICP3	Intercept Point 3rd order
ID No	Identification Number
ION	Intelligent Optical Network
ISDE	Innovation, Sciences et Développement économique Canada
ISED	Innovation, Science and Economic Development Canada; formerly IC / Industry Canada
LED	Light Emitting Diode
LMT	Local Maintenance Terminal
LTE	Long Term Evolution
MIMO	Multiple Input Multiple Output
MS	Mobile Station
MU	Main Unit
NF	Noise Figure
OMC	Operations and Maintenance Center
OTRx	Optical Transceiver = SRMU (Subrack Master Unit)
PDU	Power Distribution Unit
PIM	Passive Intermodulation
P_{in}	Input power
P_{out}	Output power
PSU	Power Supply Unit
Rev	Revision
RF	Radio Frequency
RU	Remote Unit
RX	Receiver
SISO	Single Input Single Output
SNMP	Simple Network Management Protocol
TX	Transmitter
UL	Uplink
UMTS	Universal Mobile Telecommunication System
UPS	Uninterruptible Power Supply
VSWR	Voltage Standing Wave Ratio
WCDMA	Wideband Code Division Multiple Access
WDM	Wavelength Division Multiplex
XML	Extensible Markup Language

1.2. Health and Safety

1. **Danger**: **Electrical hazard. Danger of death or fatal injury from electrical current. Obey all general and regional installation and safety regulations relating to work on high voltage installations, as well as regulations covering correct use of tools and personal protective equipment.**

2. **Danger: Electrical hazard. Danger of death or fatal injury from electrical current inside the unit in operation. Before opening the unit, disconnect mains power.**

3. **Caution:** High frequency radiation in operation. Risk of health hazards associated with radiation from the unit's inner conductor of the antenna port(s). Disconnect mains before connecting or replacing antenna cables.

4. **Caution:** High frequency radiation in operation. Risk of health hazards associated with radiation from the antenna(s) connected to the unit. Implement prevention measures to avoid the possibility of close proximity to the antenna(s) while in operation.

1.3. Property Damage Warnings

1. **Attention:** Due to power dissipation, the Extension Unit may reach a very high temperature. Do not operate this equipment on or close to flammable materials. Use caution when servicing the unit.

2. **Attention:** Only authorized and trained personnel are allowed to open the unit and get access to the inside.

3. **Notice**: Although the Extension Unit is internally protected against overvoltage, it is strongly recommended to ground (earth) the antenna cables close to the repeater's antenna connectors for protection against atmospheric discharge.

4. **Notice**: ESD precautions must be observed. Before commencing maintenance work, use the available grounding (earthing) system to connect ESD protection measures.

5. **Notice**: Only suitably qualified personnel are allowed to work on this unit and only after becoming familiar with all safety notices, installation, operation and maintenance procedures contained in this manual.

6. **Notice:** Keep operating instructions within easy reach and make them available to all users.

7. **Notice:** Read and obey all the warning labels attached to the unit. Make sure that all warning labels are kept in a legible condition. Replace any missing or damaged labels.

8. **Notice:** Only license holders for the respective frequency range are allowed to operate this unit.

9. **Notice**: Make sure the repeater settings are correct for the intended use (refer to the manufacturer product information) and regulatory requirements are met. Do not carry out any modifications or fit any spare parts, which are not sold or recommended by the manufacturer.

1.4. Compliance

1. **Notice**: For installations which have to comply with European EN50385 exposure compliance requirements, the following Power Density limits/guidelines (mW/cm²) according to ICNIRP are valid:
    - 0.2 for frequencies from 10 MHz to 400 MHz
    - F (MHz) / 2000 for frequencies from 400 MHz to 2 GHz
    - 1 for frequencies from 2 GHz to 300 GHz

2. **Notice:** For installations, which have to comply with FCC RF exposure requirements, the antenna selection and installation must be completed in a way to ensure compliance with those FCC requirements. Depending on the RF frequency, rated output power, antenna gain, and the loss between the repeater and antenna, the minimum distance D to be maintained between the antenna location and human beings is calculated according to this formula:

$$D_{[cm]} = \sqrt{\frac{P_{[mW]}}{4 * \pi * PD_{[mW/cm^2]}}}$$

where

- P (mW) is the radiated power at the antenna, i.e. the max. rated repeater output power in addition to the antenna gain minus the loss between the repeater and the antenna.
- PD (mW/cm²) is the allowed Power Density limit acc. to 47 CFR 1.1310 (B) for general population / uncontrolled exposures which is
    - F (MHz) / 1500 for frequencies from 300MHz to 1500MHz
    - 1 for frequencies from 1500MHz to 100,000MHz

RF exposure compliance may need to be addressed at the time of licensing, as required by the responsible FCC Bureau(s), including antenna co-location requirements of 1.1307(b)(3).

3. **Notice:** Installation of this equipment is in full responsibility of the installer, who has also the responsibility, that cables and couplers are calculated into the maximum gain of the antennas, so that this value, which is filed in the FCC Grant and can be requested from the FCC data base, is not exceeded. The industrial boosters are shipped only as a naked booster without any installation devices or antennas as it needs for professional installation.

4. **Notice:** For installations which have to comply with FCC/ISED requirements:

English:

This device complies with FCC Part 15. Operation is subject to the following two conditions: (1) this device may not cause interference, and (2) this device must accept any interference, including interference that may cause undesired operation of the device.

This device complies with Health Canada's Safety Code. The installer of this device should ensure that RF radiation is not emitted in excess of the Health Canada's requirement. Information can be obtained at http://www.hc-sc.gc.ca/ewh-semt/pubs/radiation/radio_guide-lignes_direct-eng.php.

Changes or modifications not expressly approved by the party responsible for compliance could void the user's authority to operate the equipment.

Antenna Stmt for ISED:

This device has been designated to operate with the antennas having a maximum gain of 9 dBi. Antennas having a gain greater than 9 dBi are prohibited for use with this device without consent by ISED regulators. The required antenna impedance is 50 ohms.

The antenna(s) used for this transmitter must be installed to provide a separation distance of at least 100 cm from all persons and must not be co-located or operating in conjunction with any other antenna or transmitter. Users and installers must be provided with antenna installation instructions and transmitter operating conditions for satisfying RF exposure compliance.

French:

Cet appareil est conforme à FCC Partie15. Son utilisation est soumise à Les deux conditions suivantes: (1) cet appareil ne peut pas provoquer d'interférences et (2) cet appareil doit accepter Toute interférence, y compris les interférences qui peuvent causer un mauvais fonctionnement du dispositif.

Cet appareil est conforme avec Santé Canada Code de sécurité 6. Le programme d'installation de cet appareil doit s'assurer que les rayonnements RF n'est pas émis au-delà de l'exigence de Santé Canada. Les informations peuvent être obtenues: http://www.hc-sc.gc.ca/ewh-semt/pubs/radiation/radio_guide-lignes_direct-fra.php

Les changements ou modifications non expressément approuvés par la partie responsable de la conformité pourraient annuler l'autorité de l'utilisateur à utiliser cet équipement.

Antenne Stmt pour ISDE:

Ce dispositif a été désigné pour fonctionner avec les antennes ayant un gain maximal de 9 dBi. Antennes ayant un gain plus grand que 9 dBi sont interdites pour une utilisation avec cet appareil sans le consentement des organismes de réglementation d'ISDE. L'impédance d'antenne requise est 50 ohms.

L'antenne (s) utilisé pour cet émetteur doit être installé pour fournir une distance de séparation d'au moins 100 cm de toutes les personnes et ne doit pas être co-localisées ou opérant en conjonction avec une autre antenne ou émetteur. Les utilisateurs et les installateurs doivent être fournis avec des instructions d'installation de l'antenne et des conditions de fonctionnement de l'émetteur pour satisfaire la conformité aux expositions RF.

5. **Notice:** Corresponding local particularities and regulations must be observed. For national deviations, please refer to the respective documents included in the manual CD that is delivered with the unit.

6. **Notice:** The unit complies with Overvoltage Category II. It also complies with the surge requirement according to EN 61000-4-5 (fine protection); however, installation of an additional medium (via local supply connection) and/or coarse protection (external surge protection) is recommended depending on the individual application in order to avoid damage caused by overcurrent.

   For Canada and US, components used to reduce the Overvoltage Category shall comply with the requirements of IEC 61643-series. As an alternative, components used to reduce the Overvoltage Category may comply with ANSI/IEEE C62.11, CSA Certification Notice No. 516, CSA C22.2 No. 1, or UL 1449. Suitability of the component for the application shall be determined for the intended installation.

7. **Note:** For a Class B digital device or peripheral:

   This equipment has been tested and found to comply with the limits for a Class B digital device, pursuant to part 15 of the FCC Rules. These limits are designed to provide reasonable protection against harmful interference in a residential installation. This equipment generates, uses and can radiate radio frequency energy and, if not installed and used in accordance with the instructions, may cause harmful interference to radio communications. However, there is no guarantee that interference will not occur in a particular installation. If this equipment does cause harmful interference to radio or television reception, which can be determined by turning the equipment off and on, the user is encouraged to try to correct the interference.

8. **Note:** For a Class A digital device or peripheral:

   This equipment has been tested and found to comply with the limits for a Class A digital device, pursuant to part 15 of the FCC Rules. These limits are designed to provide reasonable protection against harmful interference when the equipment is operated in a commercial environment. This equipment generates, uses, and can radiate radio frequency energy and, if not installed and used in accordance with the instruction manual, may cause harmful interference to radio communications. Operation of this equipment in a residential area is likely to cause harmful interference in which case the user will be required to correct the interference at his own expense.

9. **Note:** This unit complies with European standard EN60950.

Required Distances between the ION-U EU L and Antennas

The table below lists the distance that must be maintained between low power ION-U Extension Units and antennas. Please also see the requirements listed in the *Antenna Stmt for ISED* and *Antenne Stmt pour ISDE* on pages 10 and 11.

ION-U Model	Antenna gain without cable loss (dBi)	Maximum Distance			
		FCC		ISED	
		Meters	Inches	Meters	Inches
ION-U EU L 17EP/17EP	9	.502	19.76	.717	28.23

Equipment Symbols Used / Compliance

Please observe the meanings of the following symbols used in our equipment and the compliance warnings:

Symbol	Compliance	Meaning / Warning
---	FCC	For industrial (Part 20) signal booster: WARNING: This is NOT a CONSUMER device. It is designed for installation by FCC LICENSEES and QUALIFIED INSTALLERS. You MUST have an FCC LICENSE or express consent of an FCC Licensee to operate this device. Unauthorized use may result in significant forfeiture penalties, including penalties in excess of $100,000 for each continuing violation.
---	ISED	WARNING: This is NOT a CONSUMER device. It is designed for installation by an installer approved by an ISED licensee. You MUST have an ISED LICENCE or the express consent of an ISED licensee to operate this device. AVERTISSEMENT: Ce produit N'EST PAS un appareil de CONSOMMATION. Il est conçu pour être installé par un installateur approuvé par un titulaire de licence d'ISDE. Pour utiliser cet appareil, vous DEVEZ détenir une LICENCE d'ISDE ou avoir obtenu le consentement exprès d'un titulaire de licence autorisé par ISDE.
CE	CE	To be sold exclusively to mobile operators or authorized installers – no harmonized frequency bands, operation requires license. Intended use: EU and EFTA countries
		Indicates conformity with the RED directive 2014/53/EU and RoHS directive 2011/65/EU.
CE 0700	CE	Indicates conformity with the RED directive 2014/53/EU and RoHS directive 2011/65/EU certified by the notified body no. 0700.

WEEE Recycling

Country specific information about collection and recycling arrangements per the Waste Electrical and Electronic Equipment (WEEE) Directive and implementing regulations is available on CommScope's website.

http://www.commscope.com/About-Us/Corporate-Responsibility-and-Sustainability/Environment/#recycling

1.5. About CommScope

CommScope is the foremost supplier of one-stop, end-to-end radio frequency (RF) solutions. Part of the *CommScope* portfolio are complete solutions for wireless infrastructure from top-of-the-tower base station antennas to cable systems and cabinets, RF site solutions, signal distribution, and network optimization. For patents see www.cs-pat.com.

CommScope has global engineering and manufacturing facilities. In addition, it maintains field engineering offices throughout the world.

Andrew Wireless Systems GmbH based in Buchdorf/ Germany, which is part of *CommScope*, is a leading manufacturer of coverage equipment for mobile radio networks, specializing in high performance, RF and optical repeaters. Our optical distributed networks and RF repeater systems provide coverage and capacity solution for wireless networks in both indoor installations and outdoor environments, e.g. tunnels, subways, in-trains, airport buildings, stadiums, skyscrapers, shopping malls, hotels and conference rooms.

Andrew Wireless Systems GmbH operates a quality management system in compliance with the requirements of ISO 9001 and TL 9000. All equipment is manufactured using highly reliable material. To maintain highest quality of the products, comprehensive quality monitoring is conducted at all fabrication stages. Finished products leave the factory only after a thorough final acceptance test, accompanied by a test certificate guaranteeing optimal operation.

Hereby Andrew Wireless Systems declares that the radio equipment type Repeater is in compliance with Directive 2014/53/EU.
The full text of the EU declaration is available at the following internet address: www.commscope.com/collateral/Declarations_of_Conformity/.

According to the DoC, our “CE”-marked equipment can be used in all member states of the European Union.

Note: **Exceptions of and national deviations from this intended use may be possible. To observe corresponding local particularities and regulations, please refer to the respective documents (also in national language) which are included in the manual CD delivered.**

To make the most of this product, we recommend you carefully read the instructions in this manual and commission the system only according to these instructions.

For technical assistance and support, please also contact the local office or *CommScope* directly at one of the addresses listed in the following chapter.

1.6. International Contact Addresses for Customer Support

AMERICAS

Canada	
CommScope Canada	
Mail	505 Consumers Road, Suite 803 Toronto M2J 4V8, Canada
Phone	+1-905-878-3457 (Office) +1-416-721-5058 (Cell)
Fax	+1-905-878-3297
E-mail	wisupport@commscope.com

United States	
Andrew LLC, A CommScope Company	
Mail	620 North Greenfield Parkway Garner, NC 27529, U.S.A.
Phone	+1-888-297-6433
Fax	+1-919-329-8950
E-mail	wisupport@commscope.com

Caribbean & South American Region	
CommScope Cabos do Brasil Ltda.	
Mail	CALA Tech Support for *Distributed Coverage & Capacity Solutions (DCCS) products*: Rua Guaporanga, 49 Praça Seca – Rio de Janeiro – RJ ZIP: 21320-180, Brazil
Phone	+1-815-546-7154 (Cell) +55-15-9104-7722 (Office)
Fax	+ 55-15-2102-4001
E-mail	wisupport@commscope.com

Caribbean & Central American Region	
CommScope Mexico S.A. de C.V.	
Mail	CALA Tech Support for *Distributed Coverage & Capacity Solutions (DCCS) products*: Av. Insurgentes Sur 688, Piso 6 Col. Del Valle, CP: 03100 Mexico City, Mexico
Phone	+52-55-1346-1900 (Office)
Fax	+52-55-1346-1901
E-mail	wisupport@commscope.com

APAC

China, India and Rest of Asia	
Andrew International Corporation	
Mail	Room 915, 9/F Chevalier Commercial Centre 8 Wang Hoi Rd Kowloon Bay, Hong Kong
Phone	+852-3106-6100
Fax	+852-2751-7800
E-mail	wisupport.China@commscope.com

Australia & New Zealand	
Andrew Corporation (Australia) Pty Ltd.	
Mail	Unit 1 153 Barry Road Campbellfield VIC 3061, Australia
Phone	+613-9300-7969
Fax	+613-9357-9110
E-mail	wisupport.Australia@commscope.com

Africa & Middle East

Middle East & North Africa	
CommScope Solutions International Inc. (Branch)	
Mail	PO Box 48 78 22 Unit 3206, Floor 32, Jumeirah Business Center 5, Jumeirah Lakes Towers, Dubai, United Arab Emirates
Phone	+971 4 390 09 80
Fax	+971 4 390 86 23
E-mail	wisupport@commscope.com

South Africa	
Andrew Wireless Solutions Africa (PTY) LTD	
Mail	11 Commerce Crescent West Eastgate, Sandton PO Box 786117 Sandton 2146 South Africa
Phone	+ 27 11-719-6000
Fax	+ 27 11-444-5393
E-mail	wisupport@commscope.com

United Kingdom	
Andrew Wireless Systems UK Ltd	
Mail	Unit 15, Ilex Building Mulberry Business Park Fishponds Road Wokingham Berkshire RG41 2GY, England
Phone	+44-1189-366-792
Fax	+44-1189-366-773
E-mail	wisupport.uk@commscope.com
Germany	
Andrew Wireless Systems GmbH	
Mail	Industriering 10 86675 Buchdorf Germany
Phone	+49-9099-69-0
Fax	+49-9099-69-930
E-mail	wisupport@commscope.com
Austria	
Andrew Wireless Systems (Austria) GmbH	
Mail	Weglgasse 10 2320 Wien-Schwechat Austria
Phone	+43-1706-39-99-10
Fax	+43-1706-39-99-9
E-mail	wisupport.austria@commscope.com
Italy	
CommScope Italy S.r.l., Faenza, Italy	
Mail	Via Mengolina, 20 48018 Faenza (RA) Italy
Phone	+39-0546-697111
Fax	+39-0546-682768
E-mail	wisupport.italia@commscope.com
Czech Republic	
CommScope Solutions Czech Republic C-Com, spol. s r.o	
Mail	U Moruší 888 53006 Pardubice, Czech Republic
Phone	+49 871 9659171 (Office) +49 171 4001166 (Mobile)
Fax	+49 871 9659172
E-mail	wisupport@commscope.com

EUROPE

Scandinavia	
Andrew Norway (AMNW)	
Mail	P.O. Box 3066 Osloveien 10 Hoenefoss 3501 Norway
Phone	+ 47 32-12-3530
Fax	+ 47 32-12-3531
E-mail	wisupport@commscope.com
France	
CommScope France	
Mail	Immeuble Le Lavoisier 4, Place des Vosges 92052 Courbevoie, France
Phone	+33-1 82 97 04 00
Fax	+33-1 47 89 45 25
E-mail	wisupport@commscope.com
Switzerland	
CommScope Wireless Systems AG	
Mail	Tiergartenweg 1 CH-4710 Balsthal Switzerland
Phone	+41-62-386-1260
Fax	+41-62-386-1261
E-mail	wisupport.ch@commscope.com
Iberia Region – Spain & Portugal	
Andrew España S.A. A CommScope Company	
Mail	Avda. de Europa, 4 – 2ª pta. Parque Empresarial de la Moraleja Alcobendas, Madrid 28108, Spain
Phone	+34-91-745-20 40
Fax	+34-91-661-87 02
E-mail	wisupport.iberia@commscope.com

table 1-1 List of international contact addresses

2. Introduction

2.1. Purpose

Mobile telephone and public safety systems transmit signals in two directions between base transceiver station (BTS) and mobile stations (MS) within the signal coverage area to carry voice and data traffic.

If weak signal transmissions occur within the coverage area because of indoor applications, topological conditions or distance from the transmitter, extension of the transmission range can be achieved by means of an optical distributed antenna system (DAS).

Office buildings, sports arenas, college campuses, industrial parks, and other areas of high demand require the specialized capacity boost that an optical DAS can provide to meet increasing customer demands for voice and data.

An optical DAS contains optical Master Units and a sufficient number of Remote Units to provide the necessary coverage. The number of the Remote Units depends on the coverage requirements of the DAS. The Remote Units are connected to the Master Unit with optical links.

The Master Unit is the connection to the Base Transceiver Stations. The configuration of a Master Unit depends on the number of the Remote Units and the frequency range.

RF signals are transported to and from the Remote Units via optical fibers.

The ION-U system includes high power and low power Remote Units designed to meet the specific requirements of a given DAS. An ION-U Master Unit can support both high power and low power RUs simultaneously.

2.2. ION-U Low Power Remote/Extension Units

The ION-U Low Power Remote Units are scalable and integrated with up to:

- 5-band (Cell700, LMR800, Cell850, PCS1900, AWS-3 1700/2100) or
- 6-band with additional Extension Unit
- 7-band with two additional Extension Units

SISO capability. Two RUs can be operated as a pair for MIMO operation. These units are compatible with analog, GSM, EDGE, IS-95, CDMA2000, EVDO, W-CDMA, HSDPA, LTE and iDEN modulation standards. These Remote Units feature independent downlink and uplink gain adjustments and an integrated channel power detector for in-band spectrum and PIM analysis and end-to-end auto leveling.

3. Functional Description

3.1. General

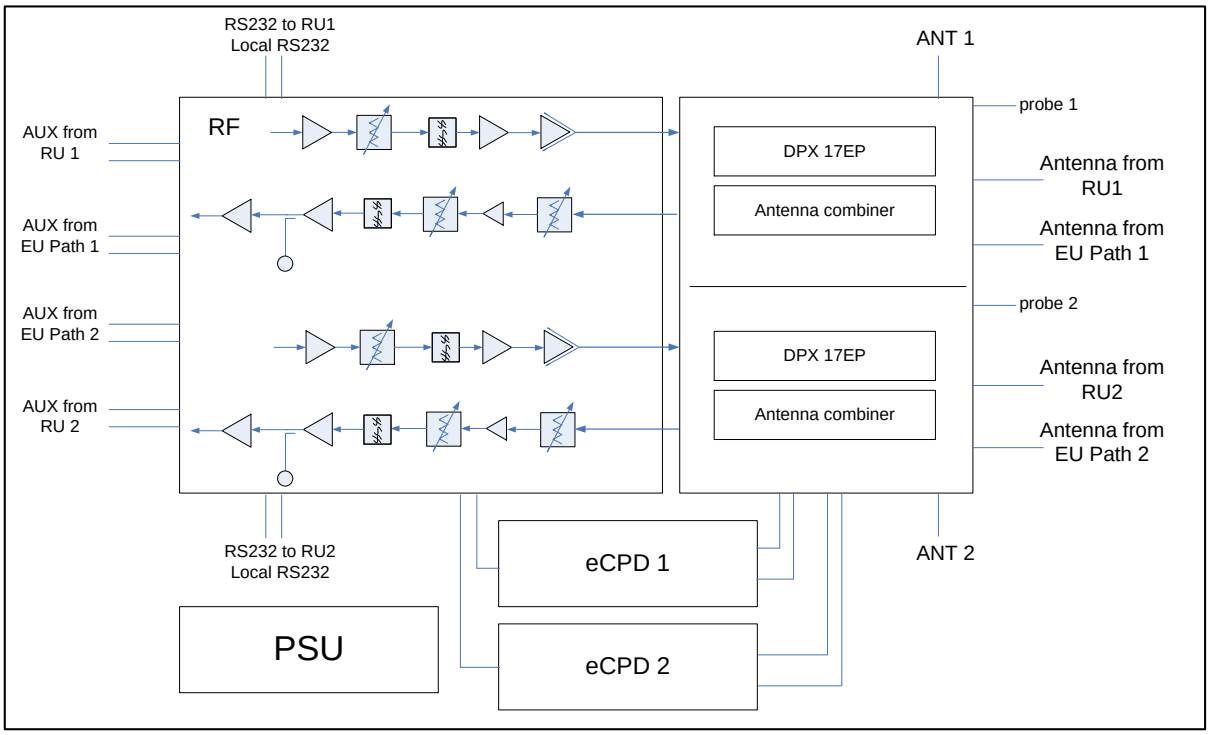

figure 3-1 ION-U EU L 17EP/17EP block diagram

In the Downlink (DL) path, the Extension Unit provides:

- RF amplification of the converted RF signal for transmission while maintaining a good signal-to-noise ratio
- RF filtering to reject spurious emissions

In the Uplink (UL) path, the Extension Unit provides:

- RF amplification to boost the signals received by the antennas to maintain a good signal-to-noise ratio
- RF filtering to reject spurious emissions
- Automatic Level Control (ALC) to adjust the RF signal level to meet blocking requirements

3.2. SISO and MIMO Operation

The architecture of the ION-U low power supports both SISO and MIMO operation. MIMO operation is achieved by pairing two RUs.
The following figures show views of a single Remote Unit for SISO applications and two Remote Units paired for MIMO applications.

figure 3-2 Remote Unit, SISO

figure 3-3 Remote Unit, MIMO two units paired

The ION-U EU L 17EP/17EP Extension unit with integrated antenna port combiner together with ION-U L 7/80-85/17(E)P/19P allows for further options.

Required RS-232 connections are not shown in the following drawings. Please see chapters 4.2.8, 4.2.9, and table 4-7 for more information.

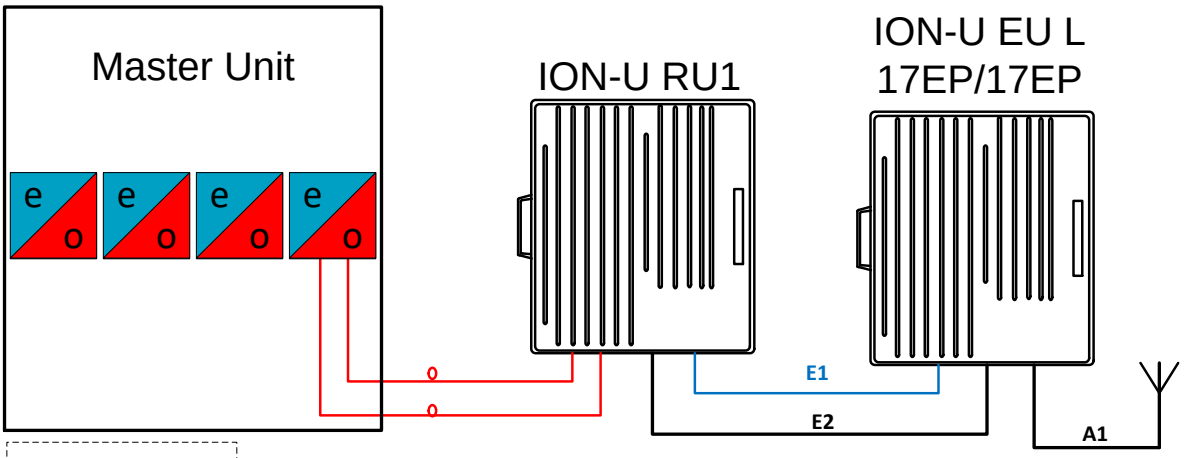

Optical
Expansion
Antenna

ID	Antenna Ports	ID	Expansion Ports
A1	RU1 ANT OUT → EU L 17EP/17EP RU IN1	E1	RU1 EXP DL/UL ports → EU L 17EP/17EP EXP RU DL/UL Path 1
A2	EU L 17EP/17EP ANT-1 → Antenna		

figure 3-4 One RU one EU one antenna RF

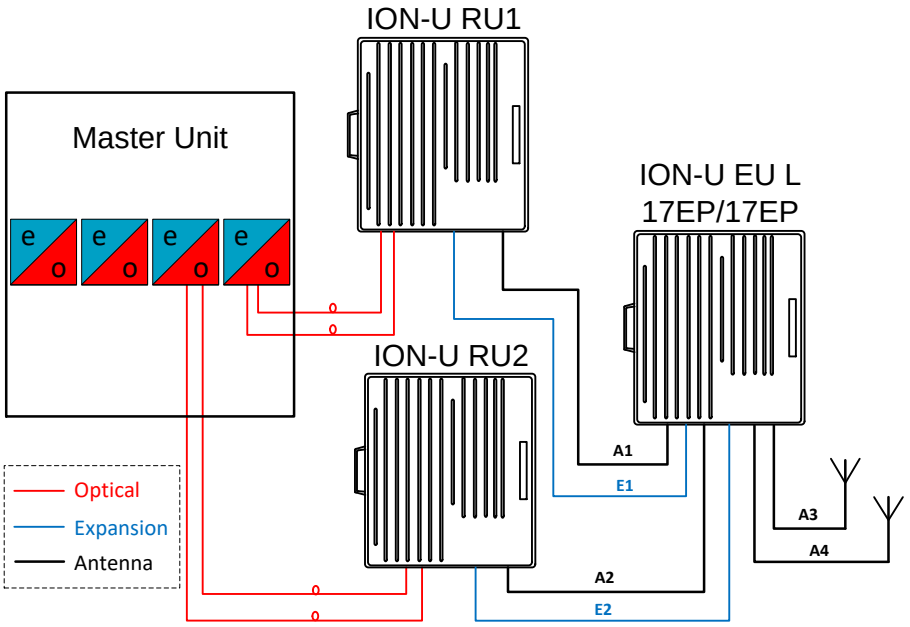

ID	Antenna Ports	ID	Expansion Ports
A1	RU1 ANT OUT → EU L 17EP/17EP RU IN1	E1	RU1 EXP DL/UL ports → EU L 17EP/17EP EXP RU DL/UL Path 1
A2	RU2 ANT OUT → EU L 17EP/17EP RU IN2	E2	RU2 EXP DL/UL ports → EU L 17EP/17EP EXP RU DL/UL Path 2
A3	EU L 17EP/17EP ANT-1 → Antenna		
A4	EU L 17EP/17EP ANT-2 → Antenna		

figure 3-5 Two RUs one EU two antennas RF

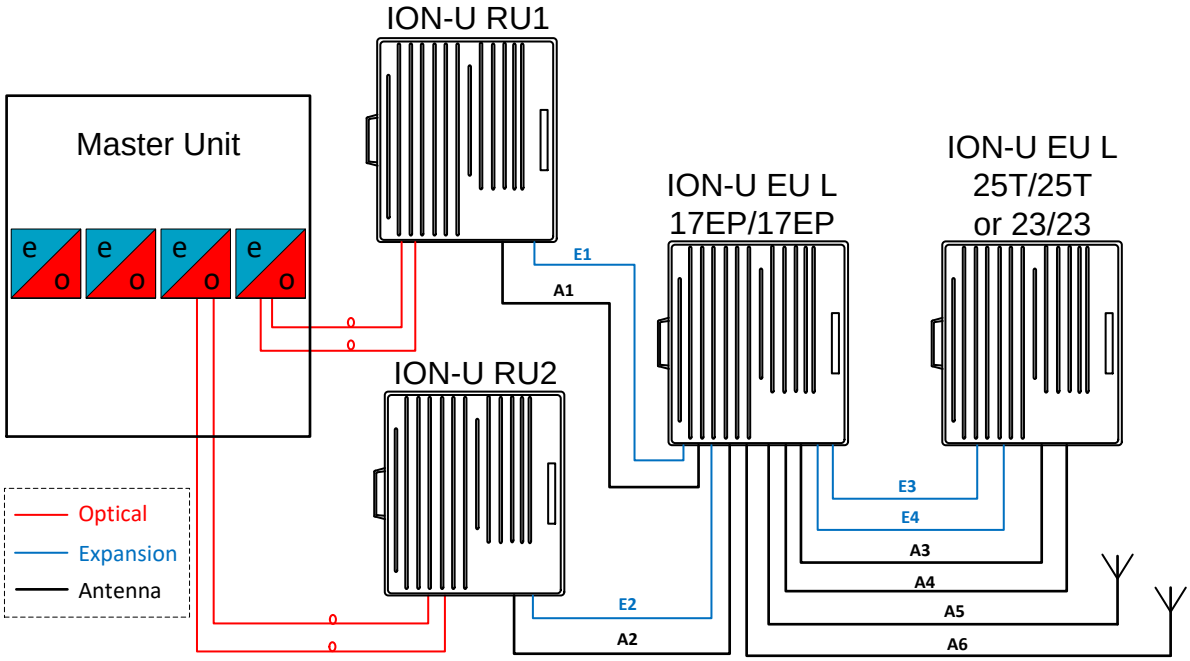

ID	Antenna Ports	ID	Expansion Ports
A1	RU 1 ANT OUT → EU L 17EP/17EP RU IN1	E1	RU1 EXP DL/UL ports → EU L 17EP/17EP EXP RU DL/UL Path 1
A2	RU 2 ANT OUT → EU L 17EP/17EP RU IN2	E2	RU2 EXP DL/UL ports → EU L 17EP/17EP EXP RU DL/UL Path 2
A3	EU L ANT-1 → EU L 17EP/17EP EU IN1	E3	EU L 17EP/17EP EXP EU DL/UL Path 1 → EU L EXP RU DL/UL Path 1
A4	EU L ANT-2 → EU L 17EP/17EP EU IN2	E4	EU L 17EP/17EP EXP EU DL/UL Path 2 → EU L EXP RU DL/UL Path 2
A5	EU L 17EP/17EP ANT-1 → Antenna		
A6	EU L 17EP/17EP ANT-2 → Antenna		

figure 3-6 Two RUs two EUs two antennas RF

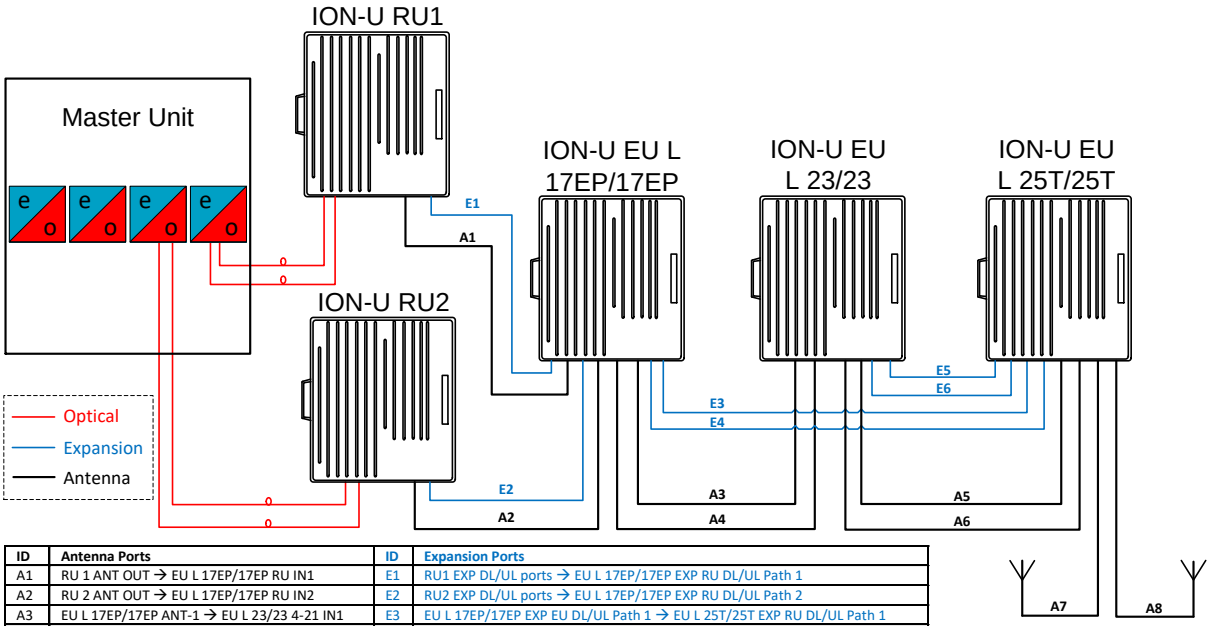

ID	Antenna Ports	ID	Expansion Ports
A1	RU 1 ANT OUT → EU L 17EP/17EP RU IN1	E1	RU1 EXP DL/UL ports → EU L 17EP/17EP EXP RU DL/UL Path 1
A2	RU 2 ANT OUT → EU L 17EP/17EP RU IN2	E2	RU2 EXP DL/UL ports → EU L 17EP/17EP EXP RU DL/UL Path 2
A3	EU L 17EP/17EP ANT-1 → EU L 23/23 4-21 IN1	E3	EU L 17EP/17EP EXP EU DL/UL Path 1 → EU L 25T/25T EXP RU DL/UL Path 1
A4	EU L 17EP/17EP ANT-2 → EU L 23/23 4-21 IN2	E4	EU L 17EP/17EP EXP EU DL/UL Path 2 → EU L 25T/25T EXP RU DL/UL Path 2
A5	EU L 23/23 ANT-1 → EU L 25T/25T 4-23 IN1	E5	EU L 25T/25T EXP EU DL/UL ports Path 1 → EU L 23/23 EXP DL/UL Path 1 ports
A6	EU L 23/23 ANT-2 → EU L 25T/25T 4-23 IN2	E6	EU L 25T/25T EXP EU DL/UL ports Path 2→ EU L 23/23 EXP DL/UL Path 2 ports
A7	EU L 25T/25T ANT-1 → Antenna		
A8	EU L 25T/25T ANT-2 → Antenna		

figure 3-7 Two RUs three EUs (2300 MHz Optimized) RF

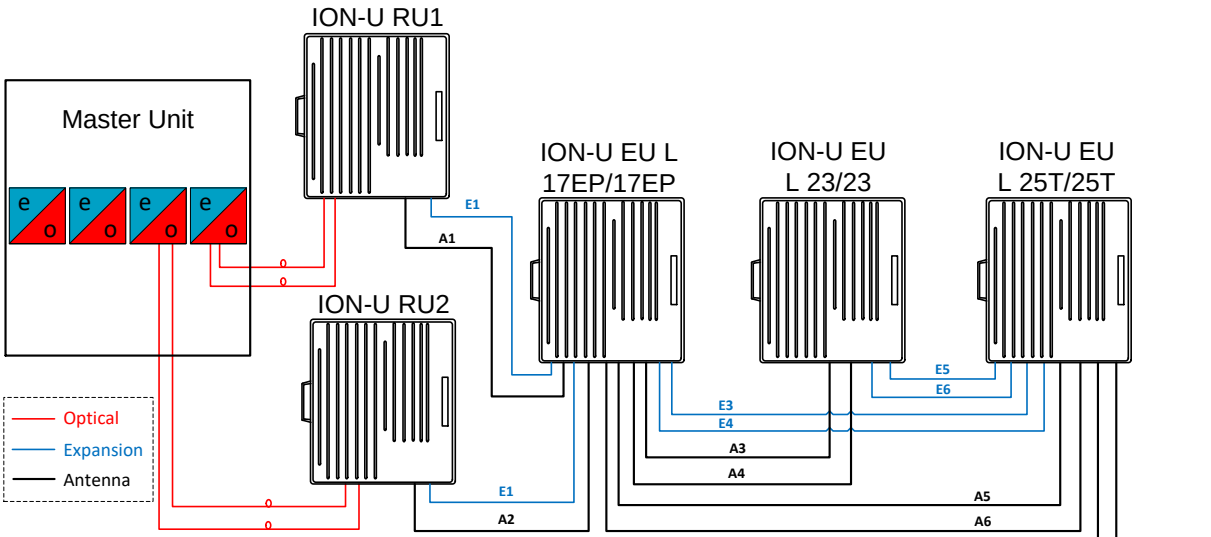

ID	Antenna Ports	ID	Expansion Ports
A1	RU 1 ANT OUT → EU L 17EP/17EP RU IN1	E1	RU1 EXP DL/UL ports → EU L 17EP/17EP EXP RU DL/UL Path 1
A2	RU 2 ANT OUT → EU L 17EP/17EP RU IN2	E2	RU2 EXP DL/UL ports → EU L 17EP/17EP EXP RU DL/UL Path 2
A3	EU L 23/23 ANT-1 → EU L 17EP/17EP EU IN1	E3	EU L 17EP/17EP EXP EU DL/UL Path 1 → EU L 25T/25T EXP RU DL/UL Path 1
A4	EU L 23/23 ANT-2 → EU L 17EP/17EP EU IN2	E4	EU L 17EP/17EP EXP EU DL/UL Path 2 → EU L 25T/25T EXP RU DL/UL Path 2
A5	EU L 17EP/17EP ANT-1 → EU L 25T/25T 4-23 IN1	E5	EU L 25T/25T EXP EU DL/UL ports Path 1 → EU L 23/23 EXP DL/UL Path 1 ports
A6	EU L 17EP/17EP ANT-2 → EU L 25T/25T 4-23 IN2	E6	EU L 25T/25T EXP EU DL/UL ports Path 2→ EU L 23/23 EXP DL/UL Path 2 ports
A7	EU L 25T/25T ANT-1 → Antenna		
A8	EU L 25T/25T ANT-2 → Antenna		

figure 3-8 Two RUs three EUs (RU band loss minimized) RF

3.3. ION-U EU L 17EP/17EP Ports

The RF, mains power, alarm, power control, and expansion ports are located on the bottom of the EU. Please see the Appendix to view other LP EU and RU port layouts.

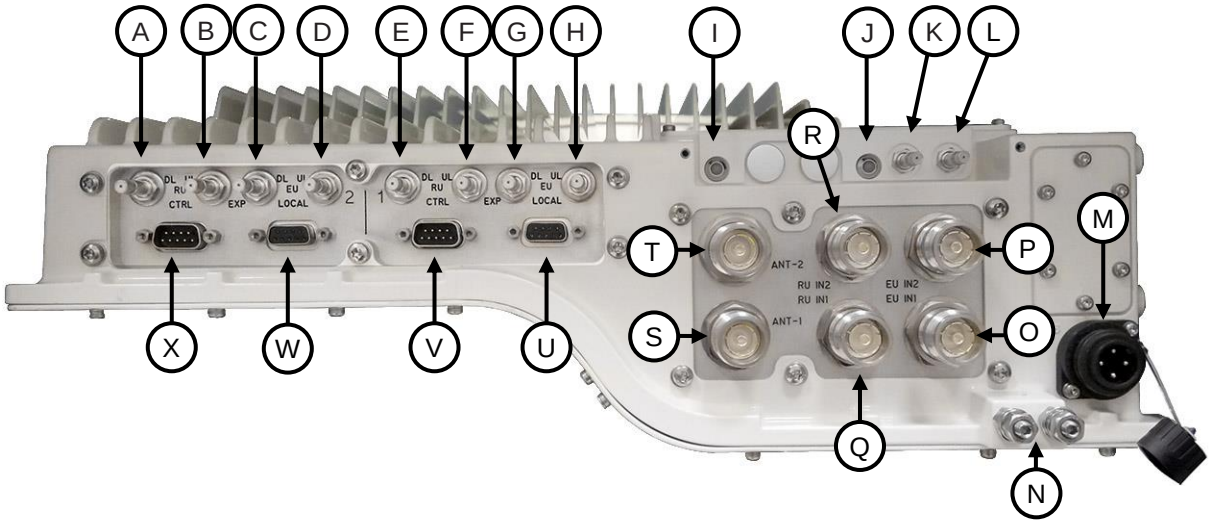

A	Expansion DL RU port path 2	M	Mains power connector
B	Expansion UL RU port path 2	N	Grounding (earthing) bolts
C	Expansion DL EU port path 2	O	EU IN1 RF path 1
D	Expansion UL EU port path 2	P	EU IN2 RF path 2
E	Expansion DL RU port path 1	Q	RU IN1 RF path 1
F	Expansion UL RU port path 1	R	RU IN2 RF path 2
G	Expansion DL EU port path 1	S	ANT-1 – RF to antenna path 1
H	Expansion UL EU port path 1	T	ANT-2 – RF to antenna path 2
I	Status LED path 2	U	Local Port RS-232 path 1
J	Status LED path 1	V	Ctrl connector path 1
K	Probe path 2	W	Local Port RS-232 path 2
L	Probe path 1	X	Ctrl connector path 2

figure 3-9 EU L 17EP/17EP connectors and Status LEDs

ANT -1, ANT-2 Antenna Ports

The EU has two duplex 4.3-10 female antenna ports Ⓢ Ⓣ for transmitting and receiving signals to and from distributed antennas. These RF ports can be connected directly to antennas (i.e. using RF jumper cables) or through splitters, allowing additional antennas to be fed by the EU.

RU IN1, RU IN2 Antenna Ports

The EU has two duplex 4.3-10 female antenna ports Ⓚ Ⓛ for connecting to the antenna ports of two ION-U L Remote Units. The signals are combined and fed to the ANT-1, ANT-2 ports of the EU.

EU IN1, EU IN2 Antenna Ports

The EU has two duplex 4.3-10 female antenna ports Ⓞ Ⓟ for connecting to the antenna ports of an ION-U EU L Expansion Unit. The signals are combined and fed to the ANT-1, ANT-2 ports of the ION-U EU L 17EP/17EP.

Status LEDs

The status LEDs Ⓘ Ⓙ provide a visual warning of an alarm condition. The color of the LED indicates the severity of the alarm.

RU Expansion Ports

The RU DL and UL Expansion ports for path 2 Ⓐ Ⓑ and the RU DL and UL Expansion ports for path 1 Ⓔ Ⓕ are QMA female connectors that are used to connect to the Expansion ports of two RUs.

EU Expansion Ports

The EU DL and UL Expansion ports for path 2 Ⓒ Ⓓ and the EU DL and UL Expansion ports for path 1 Ⓖ Ⓗ are QMA female connectors that are used to connect to the Expansion ports of an additional EU such as an ION-U EU L 23/23.

Mains Connector

The EU receives its power through the Mains connector Ⓜ. The type of connector depends on the EU model. A 4-pin Amphenol connector is used for AC models and standard DC models. A 7-pin Amphenol connector is used for DC models powered by a dual cable supply.

Ctrl Connector

The Ctrl connectors Ⓥ Ⓧ are DB-9 male connectors and are used for external modem communication with RUs.

Local Port RS-232

The RS-232 ports Ⓤ Ⓦ are standard DB-9 female connectors used for external modem communication with another EU.

Probe Port

The probe ports Ⓚ Ⓛ are QMA measurement probes that allow the measurement of the antenna outputs without disconnecting the antennas. The coupling is as follows:

Port	Coupling dB typ.
1700 MHz	41dB

4. Commissioning

Read and observe the health and safety and property damage warnings as well as the description carefully to avoid mistakes and proceed step-by-step as described.

- **Attention**: Do not operate the Extension Unit without terminating the antenna connectors. The antenna connectors may be terminated by connecting them to their respective antennas or to a dummy load.
- **Notice**: Only qualified personnel should carry out the electrical, mechanical, commissioning, and maintenance activities that require the unit to be powered on when open.
- When opening the Extension Unit, do not damage the warranty labels on the internal devices. The warranty is void if the seals are broken.
- Ensure that all connections have been performed according to chapter *4.2.3 Connections*.

4.1. Low Power EU Mechanical Installation

4.1.1. Health and Safety for mechanical installation

Read and observe chapter 1.2 Health and Safety.

1. **Caution:** Risk of injury by the considerable weight of the unit falling. Ensure there is adequate manpower to handle the weight of the system.
2. **Caution:** Risk of serious personal injury by equipment falling due to improper installation. The installer must verify that the supporting surface will safely support the combined load of the electronic equipment and all attached hardware and components. The screws and dowels (wall anchors) used should also be appropriate for the structure of the supporting wall.

4.1.2. Property Damage Warnings for mechanical installation

1. **Attention:** Do not install the unit in a way or at a place where the specifications outlined in the Environmental and Safety Specifications leaflet of the supplier are not met.
2. **Attention:** Due to power dissipation, the unit may reach a very high temperature. Ensure sufficient airflow for ventilation.
3. **Notice:** Exceeding the specified load limits may cause the loss of warranty.
4. **Notice:** When connecting and mounting the cables (RF, optical, mains, ...) ensure that no water can penetrate into the unit through these cables.

5. **Notice:** If any different or additional mounting material is used, ensure that the mounting remains as safe as the mounting designed by the manufacturer. The specifications for stationary use of the Unit must not be exceeded. Ensure that the static and dynamic strengths are adequate for the environmental conditions of the site. The mounting itself must not vibrate, swing or move in any way that might cause damage to the Unit.

Specified torques must be observed for certain mounting procedures according to the following table:

Type	***Pins***	***Hex nuts***	***Screws***
Thread	M 6	M 6	M6
Specified torques	3.3 N-m	3.3 N-m	3.3 N-m

table 4-1 Specified torques

4.1.3. Mounting bracket

4.1.3.1. Mount to a wall

1. Check the suitability of the wall-mounting kit and the wall.

2. Install the mounting bracket using 4 M6 screw anchors (not included*) or suitable lag bolts according to the drilling layout. Confirm that the bracket is securely fastened to the wall. Installer must verify that the supporting surface will safely support the combined load of the electronic equipment and all attached hardware and components.

   * The M6 screw anchors are not included as part of the EU delivery because the suitable type depends on the on-site conditions (wall structure and materials). Use screw anchors that are appropriate for the mounting surface.

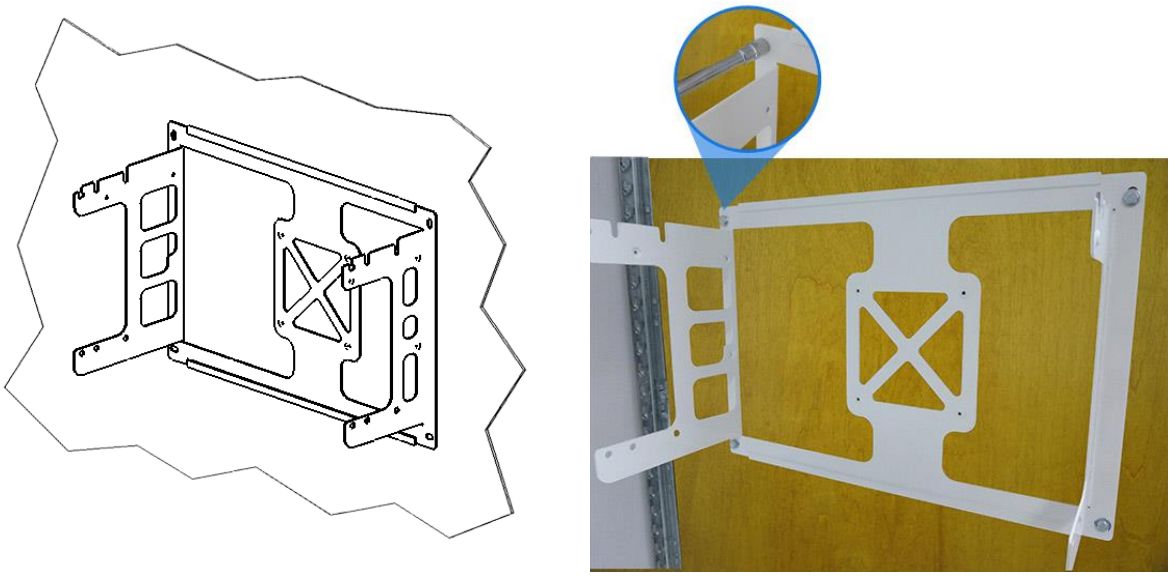

figure 4-1 Mounting bracket

4.1.3.2. Mount to a pole

Mounting kits are available for poles from 4“ to 18” (10.2 cm to 45.8 cm) and for 40” (1 m).

1. Mount the mounting bracket to the four screw pins of the two pole-mounting brackets with M6 plain washers (9), split lock washers (10) and self lock nuts (8).

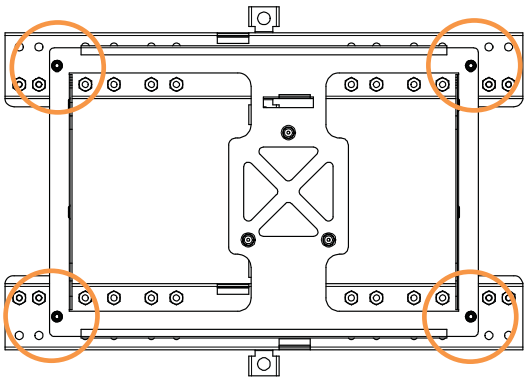

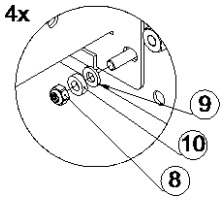

2. Screw a M8 nut (4) to one end of each of the eight threaded bolts and slide a plain washer (5) on the bolt.

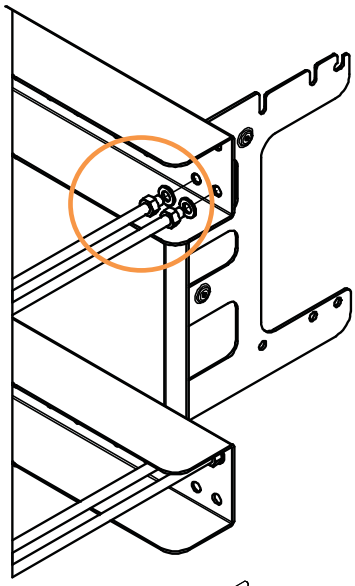

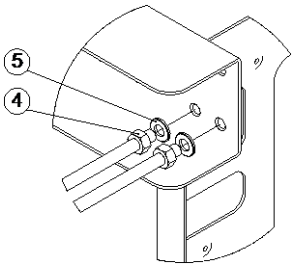

3. Screw the end of the threaded bolts (with the nut and washer) from the inner side to the welded nuts of the pole-mounting bracket. Use the nuts that allow to mount the mounting kit with the threaded bolts as close to the pole as possible. Lock the screwing by fastening the M8 nut.

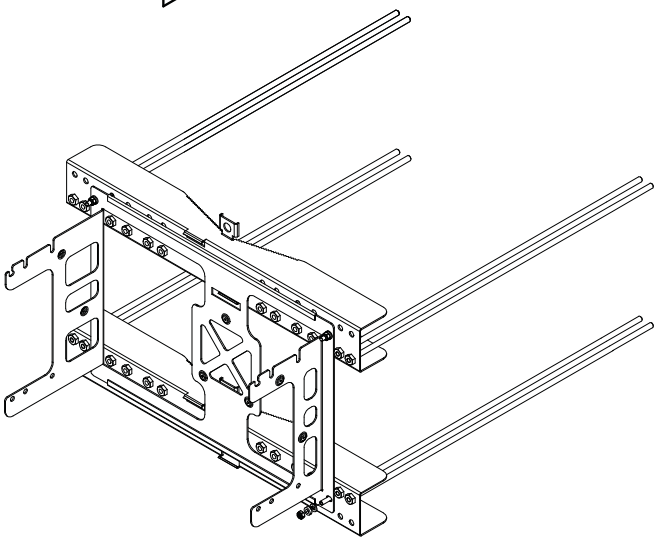

4. Mount the pole-mounting kit with the two brackets and M8 plain washers (5), split lock washers (6), and self lock nuts (7) to the pole.

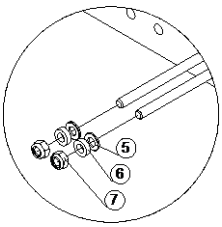

Take care to mount the brackets congruently and not at an angle.

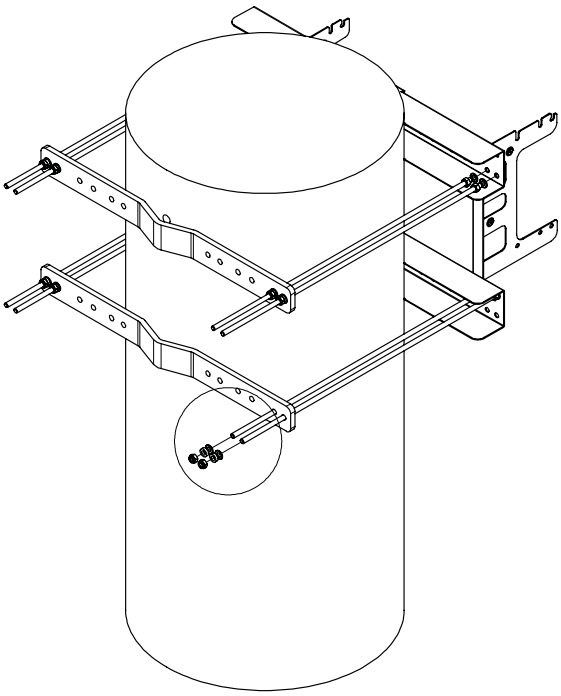

figure 4-2 Pole-mounting kit 4” to 18”

Mounting the 40” pole-mounting kit is similar, except:

- the pole-mounting bracket provides no screw pins, but the mounting bracket is fastened with four screws M8 x 25 (2) and M8 self lock nuts (3).
- the pole-mounting bracket provides no welded nuts but all the threaded bolts are mounted with M8 plain washers (7), split lock washers (6) and nuts.

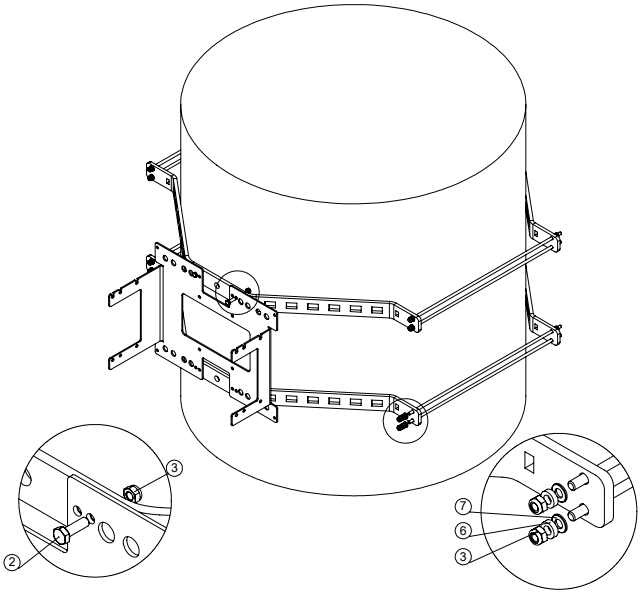

figure 4-3 Pole-mounting kit 40”

4.1.4. Threaded pins

1. Attach an M6 threaded pin to the unit by inserting it into the threaded hole adjacent to the power supply and turning it clockwise. Tighten the pin securely with a socket wrench.

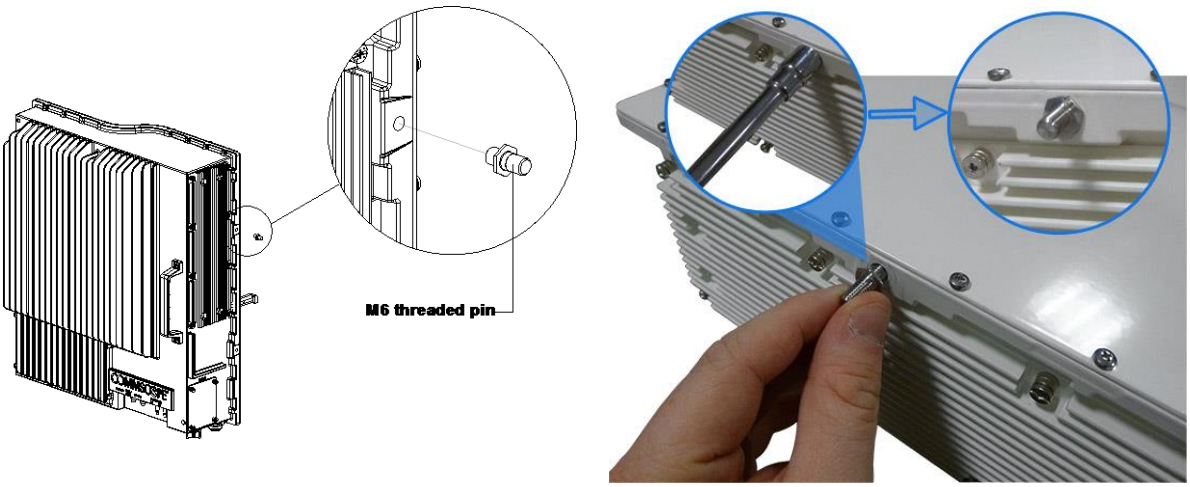

figure 4-4 EU threaded pin power supply side

2. Attach an M6 threaded pin to the nit by inserting it into the threaded hole above the handle and turning it clockwise. Tighten the pin securely with a socket wrench.

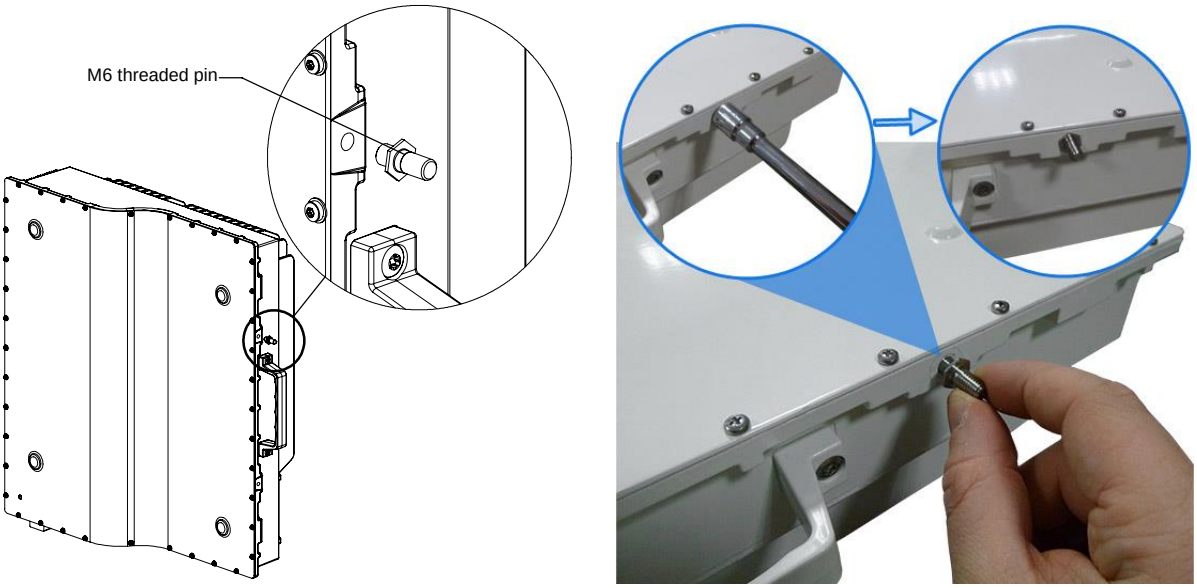

figure 4-5 EU threaded pin narrow side

4.1.5. Wall mounting procedure – Single Unit

1. Follow the instructions for mounting the bracket and installing the threaded pins in *chapter 4.1.3.*
2. Install the unit on the wall-mounting bracket by lifting it into place and using both handles and lowering it down onto the bracket. The M6 pins must align with the slots in the bracket to support the unit.

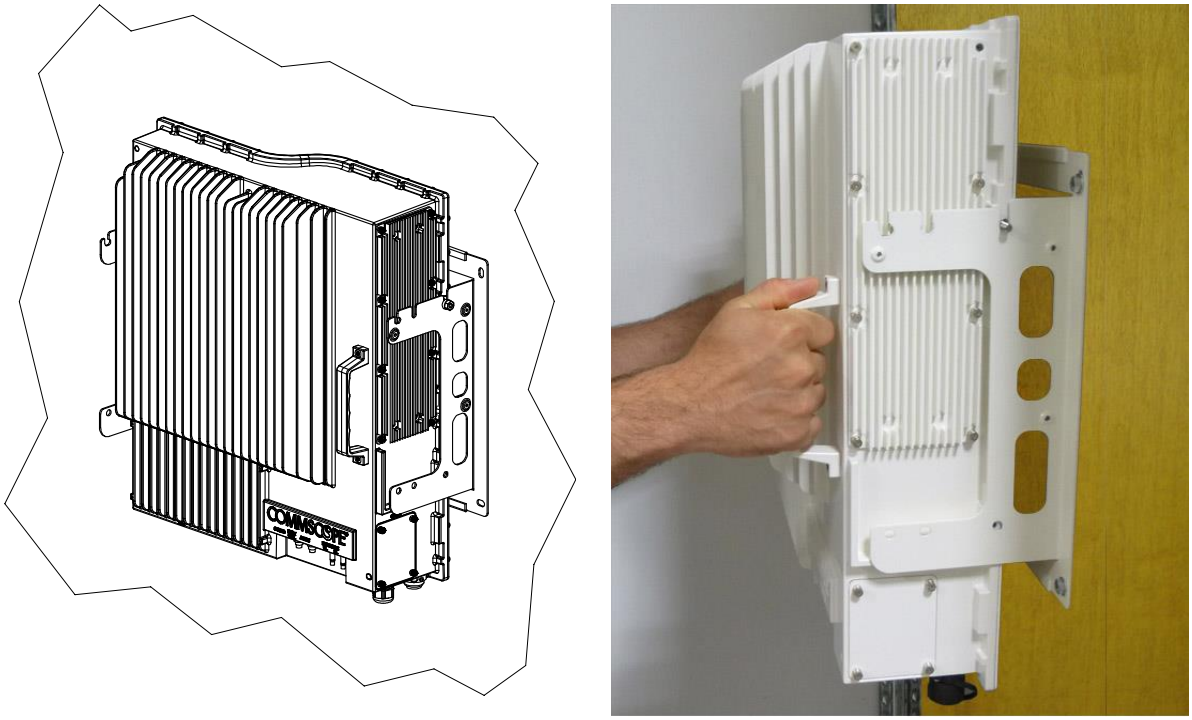

figure 4-6 Place EU onto wall mounting bracket – single mount

3. Fasten the lower section of the unit to the bracket using a washer and an M6x12 screw (on both sides). Slide a washer over each screw and then insert the screw and tighten it securely.

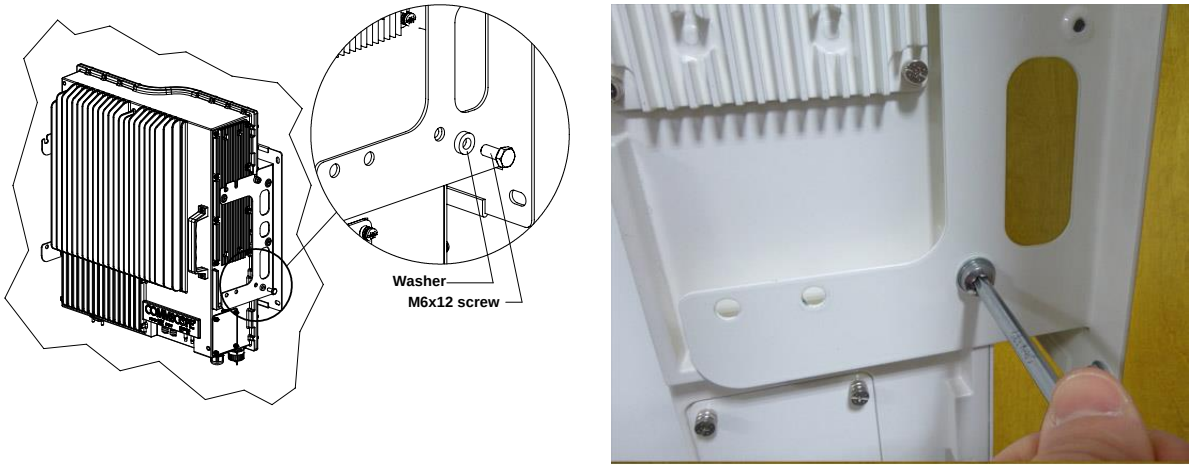

figure 4-7 Install M6x12 screws and washers for single mount

4. Fasten the unit to the bracket using a washer and M6 nut. Slide the washer over the threaded pins that you installed previously (chapter *4.1.3*) and then screw the nut onto the pins (on both sides) and tighten securely.

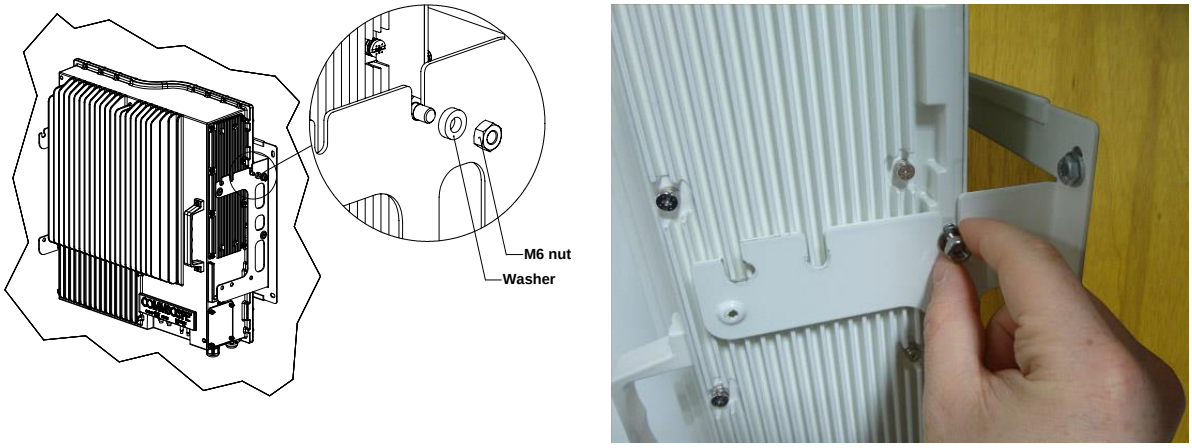

figure 4-8 Attach M6 nut to threaded pins for single mount

5. Confirm that all screws and nuts have been fastened and the unit is securely mounted to the wall.

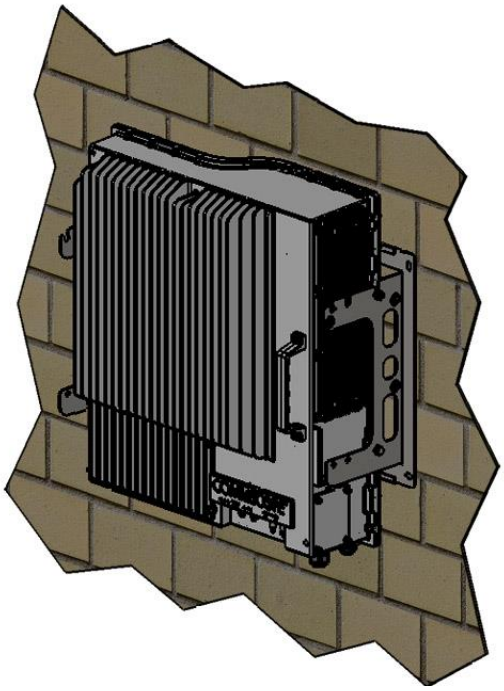

figure 4-9 Completed single EU mount

4.1.6. Wall mounting procedure – Dual Units

1. Follow the instructions for mounting the bracket and installing the threaded pins in *chapter 4.1.3*.

2. Install the first unit on the wall-mounting bracket by lifting the unit into place and lowering it down onto the bracket. The M6 pins must align with the slots in the bracket to support the unit. Note that the first unit is installed with the curved side facing you, which is the opposite of the installation procedure for single (one unit) mounting.

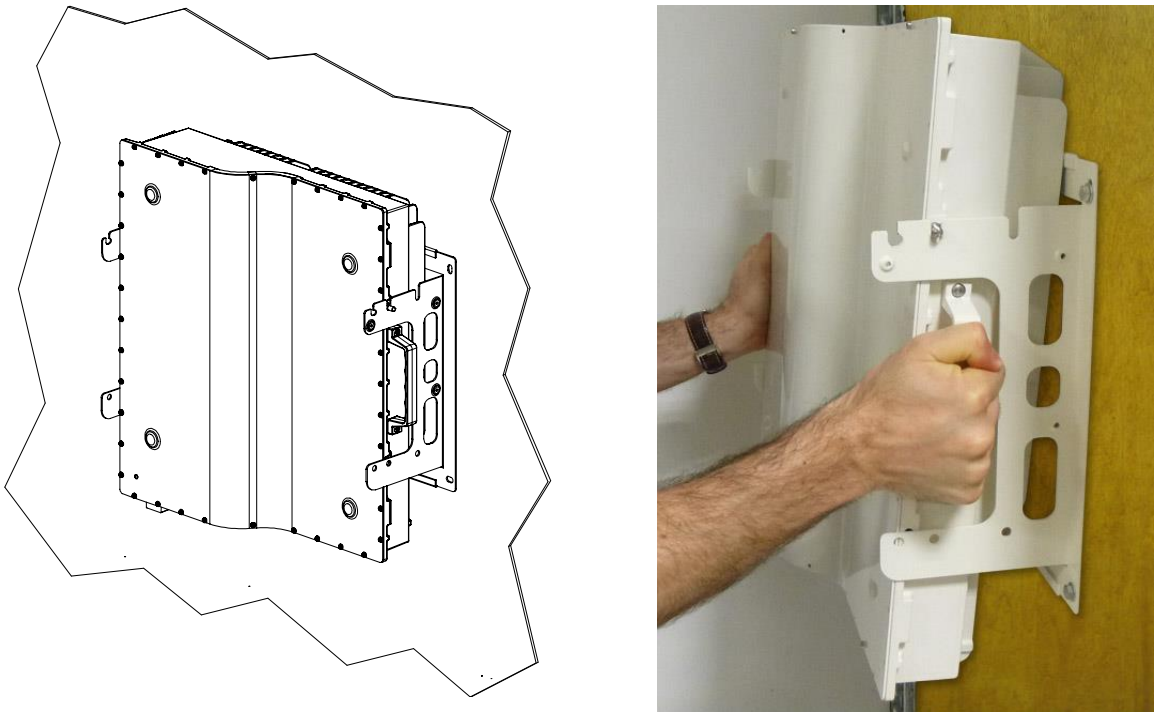

figure 4-10 1st unit placed on wall mounting bracket

3. Fasten the lower section of the first unit to the bracket using a washer and an M6x12 screw (on both sides). Slide a washer over each screw and then insert the screw and tighten it securely.

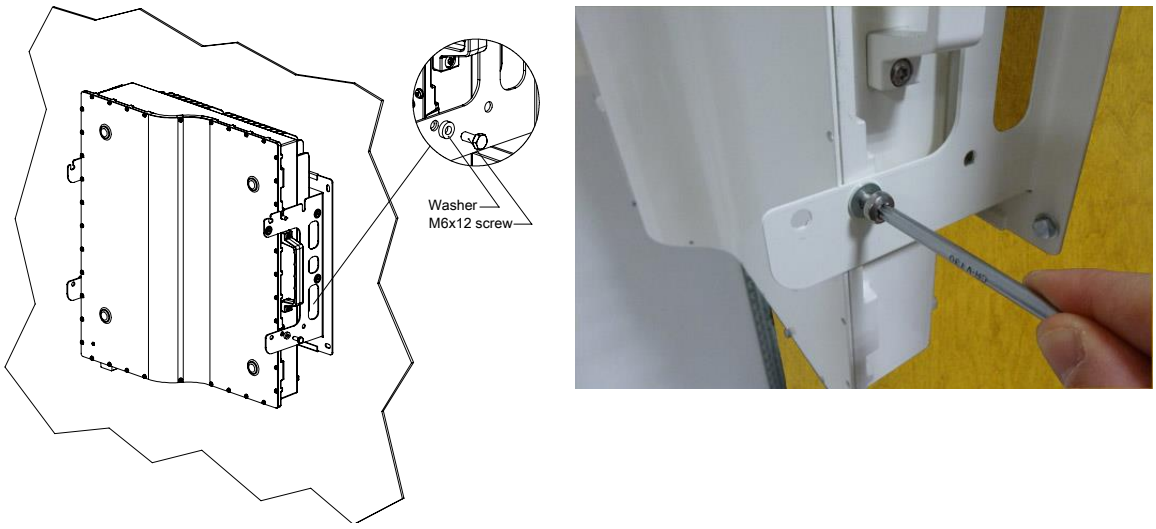

figure 4-11 Install M6x12 screws and washers

4. Fasten the unit to the bracket using a washer and M6 nut. Slide the washer over the threaded pins that you installed previously (chapter *4.1.3*) and then screw the nut onto the pins (on both sides) and tighten securely.

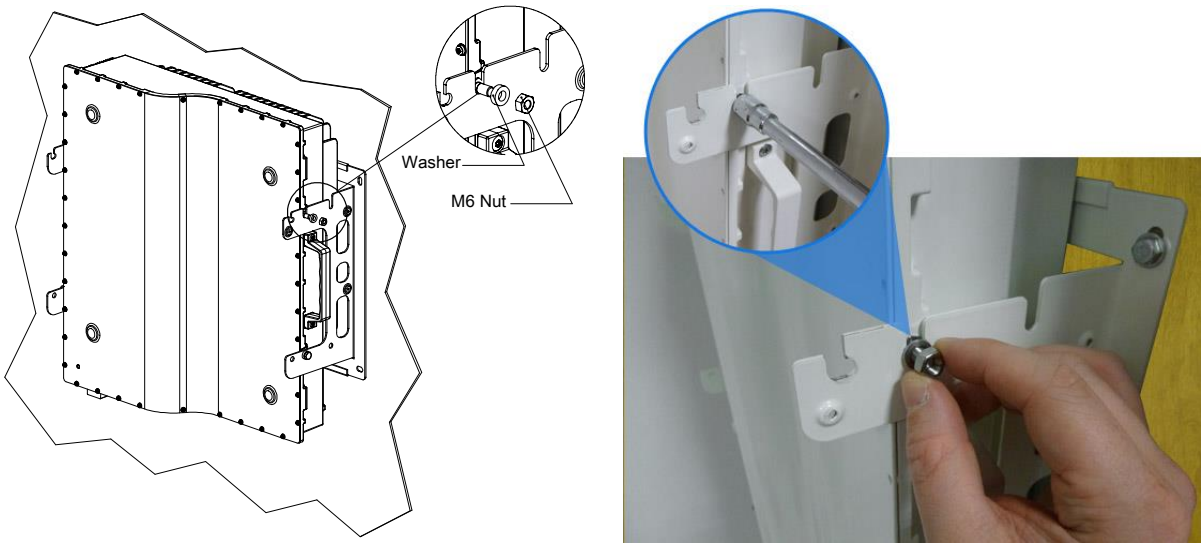

figure 4-12 Attach M6 nut to threaded pins

5. Install the second unit on the wall-mounting bracket by lifting the unit into place and lowering it down onto the bracket. The 2nd unit is reversed in direction from the 1st unit. The M6 pins must align with the slots in the bracket to support the unit.

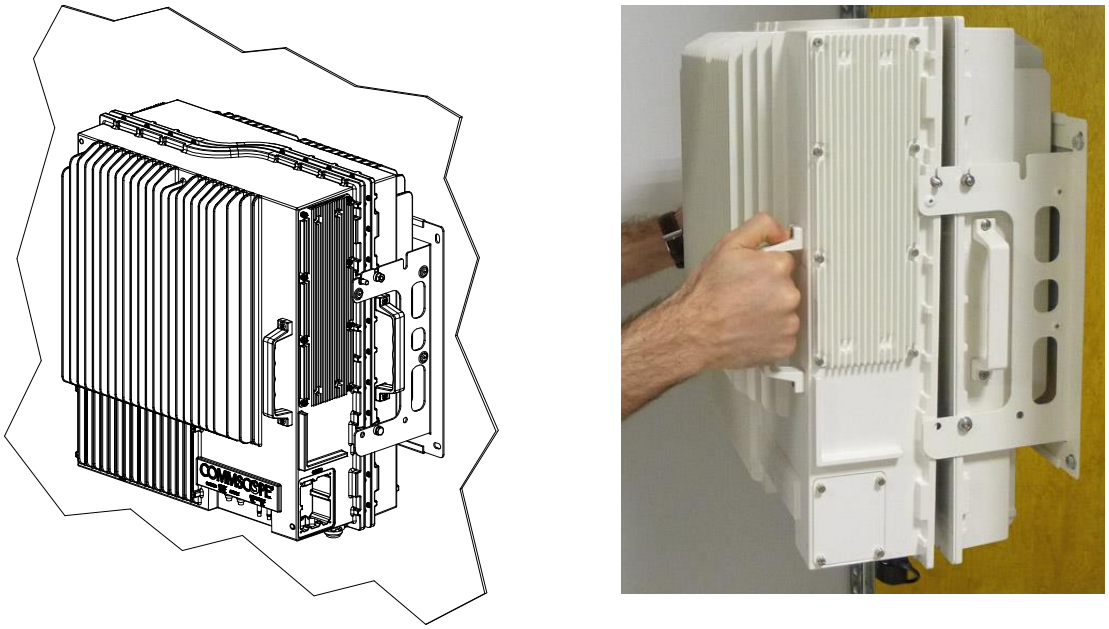

figure 4-13 2nd unit on wall mounting bracket

6. Fasten the lower section of the second unit to the bracket using a washer and an M6x12 screw (on both sides). Slide a washer over each screw and then insert the screw and tighten it securely.

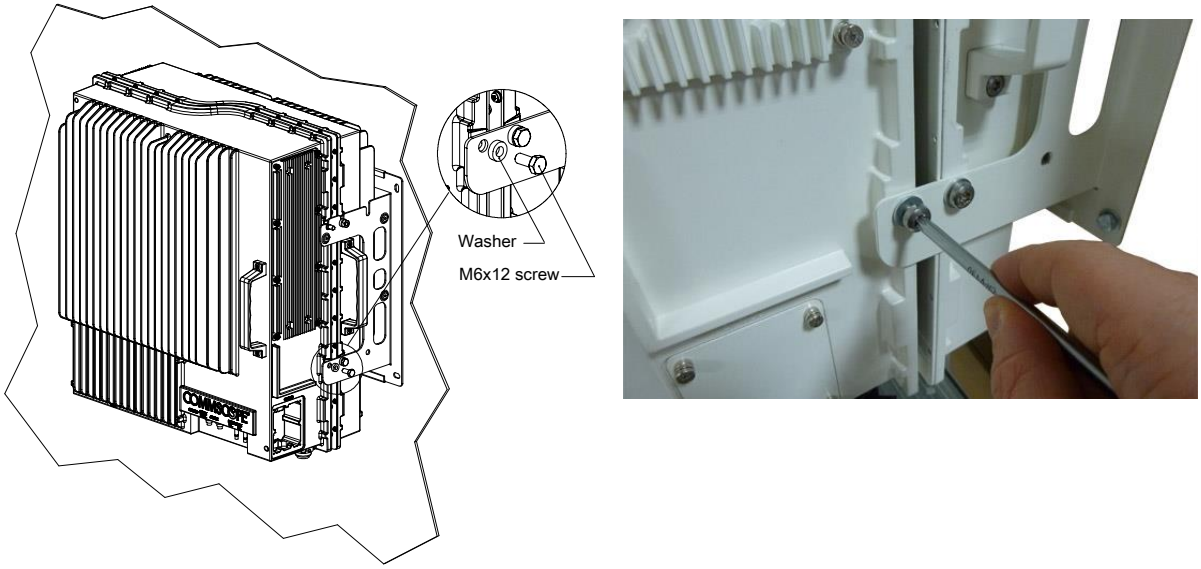

figure 4-14 Install M6x12 screws and washers 2nd unit

7. Fasten the unit to the bracket using a washer and M6 nut. Slide the washer over the threaded pins that you installed previously (chapter *4.1.3*) and then screw the nut onto the pins (on both sides) and tighten securely.

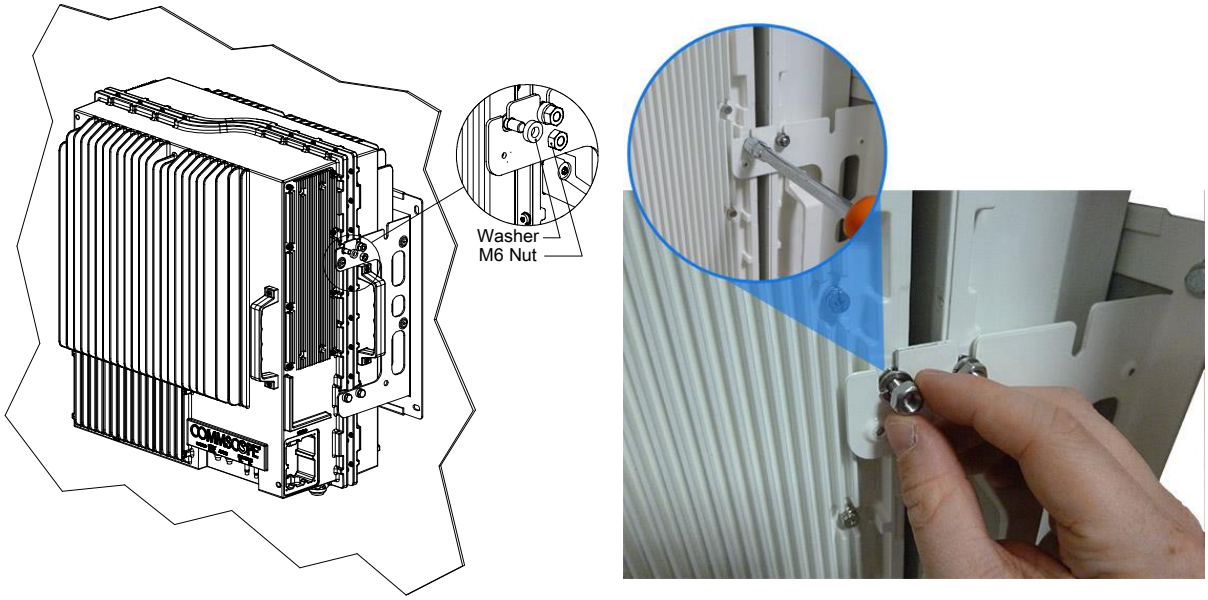

figure 4-15 Attach M6 nut to threaded pins for 2nd unit

8. Confirm that all screws and nuts have been fastened and the unit is securely mounted to the wall.

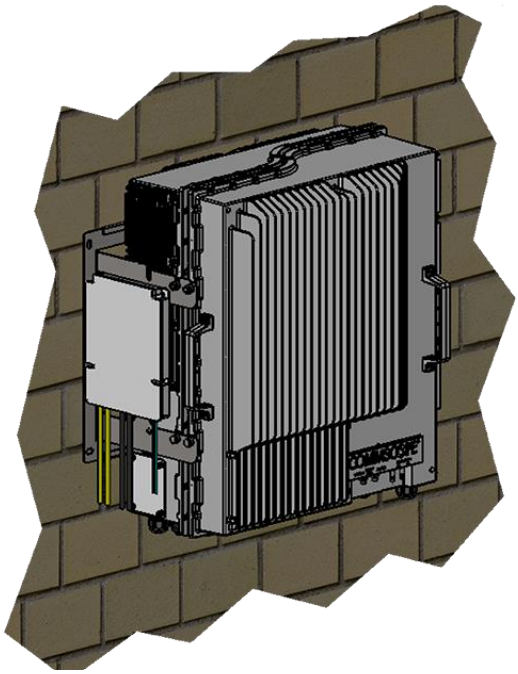

figure 4-16 Completed dual unit mount

4.1.7. Pole mounting procedure – single and dual

The pole mounting procedures are identical to the wall mounting procedures described in chapters 4.1.5 Wall mounting procedure – Single Unit and 4.1.6 Wall mounting procedure – Dual Units, except for the mounting of the mounting bracket described in chapter 4.1.3.2 Mount to a pole.

4.2. Low Power EU Electrical Installation

4.2.1. Health and Safety for electrical installation

Read and observe chapter 1.2 Health and Safety.

1. **Danger: Electrical hazard. Danger of death or fatal injury from electrical current. Obey all general and regional installation and safety regulations relating to work on high voltage installations, as well as regulations covering correct use of tools and personal protective equipment.**

2. **Danger: Electrical hazard. Danger of death or fatal injury from electrical current inside the unit in operation. Before opening the unit, disconnect mains power.**

4.2.2. Property Damage Warnings for electrical installation

1. **Attention:** It is compulsory to ground (earth) the unit before connecting the power supply. Grounding bolts are provided on the cabinet to connect the ground-bonding cable.

2. **Attention:** If the mains connector of the unit is not easily accessible, a disconnect device in the mains power circuit must be provided within easy reach.

3. **Attention:** A connection of the mains supply to a power socket requires the power socket to be nearby the unit.

4. **Attention:** Before connecting or disconnecting the mains connector at the unit, ensure that mains power supply is disconnected.

5. **Attention:** Make sure that an appropriate circuit breaker acting as a disconnect device (as required by IEC/EN60950-1) and an overcurrent limiting device are connected between mains power and the unit.

6. **Attention:** Incorrectly wired connections can destroy electrical and electronic components.

7. **Notice:** Although the unit is internally protected against overvoltage, it is strongly recommended to ground (earth) the antenna cables close to the antenna connectors of the unit for protection against atmospheric discharge. In areas with strong lightning, it is strongly recommended to install additional lightning protection.

8. **Notice:** To avoid corrosion at the connectors caused by electrochemical processes, the material of the cable connectors must not cause a higher potential difference than 0.6 V (see electrochemical contact series).

9. **Notice:** Use an appropriate torque wrench for the coupling torques:
   - for N-type connectors (2 N-m / 20 in lb) with 13/16 in opening, e. g. item no. 244379 available from the *CommScope e-catalog*
   - for 4.3-10 type connectors (5 N-m, 44 in lb) with 22mm (7/8) in opening

   Do NOT use your hands or any other tool (e.g. a pair of pliers). This might cause damage to the connector and lead to a malfunction of the unit.

10. **Notice:** For unstabilized electric networks, which frequently generate spikes, the use of a voltage limiting device is advised.

11. **Notice:** Observe the labels on the front panels before connecting or disconnecting any cables.

12. **Notice:** Unused connectors must be closed with their protective covers to ensure water tightness.

4.2.3. Connections

ION-U Low Power EU Connectors/Indicators		
Port/Conn	**Purpose**	**Type**
LOCAL RS-232	These connectors are used for external modem communication with another EU.	DB-9 Female
STATUS	These LEDs provide a visual warning of an alarm condition. The color of the LED indicates the severity of the alarm.	LED
CTRL	These connectors are used for external modem communication with RUs.	DB-9 Male
EXPANSION RU DL Path 1/ Path 2	These connectors are used to connect to the DL Expansion ports of up to two Remote Units.	QMA Female
EXPANSION RU UL Path 1/ Path 2	These connectors are used to connect to the UL Expansion ports of up to two Remote Units.	QMA Female
EXPANSION EU DL Path 1/ Path 2	These connectors are used to connect to the DL Expansion ports of another Extension Unit to provide an additional band of coverage.	QMA Female
EXPANSION EU UL Path 1/ Path 2	These connectors are used to connect to the UL Expansion ports of another Extension Unit to provide an additional band of coverage.	QMA Female
MAINS (Vac/Vdc)	This connector provides the power to RU models that use standard AC (85 to 265 Vac) or RU models that use standard DC (-60 to -38 Vdc) power.	Amphenol C016 Series, 4-Pin
MAINS (Vdc/100)	This connector provides power to RU models used in locations where the power drawn on each cable must be limited to a maximum of 100 VA.	Amphenol C016 Series, 7-Pin
Grounding Bolts	Ground (earth) bolts for connecting the mandatory ground cable to the EU.	M6 bolts, hex nut, & washers
ANT 1 / ANT 2	These connectors are used for transmitting and receiving signals to and from an antenna or antenna splitter.	4.3-10
RU IN1 / RU IN2	These connectors are used for transmitting and receiving signals to and from the antenna port of an RU.	4.3-10
EU IN1 / EU IN2	These connectors are used for transmitting and receiving signals to and from the antenna port of an EU.	4.3-10

4.2.4. Grounding (Earthing)

The EU must be grounded (earthed).

1. Connect an earth-bonding cable to the grounding bolt connection provided on the outside of the unit (near the Mains connector) as shown in figure 4-17. Do not use the grounding connection to connect external devices.

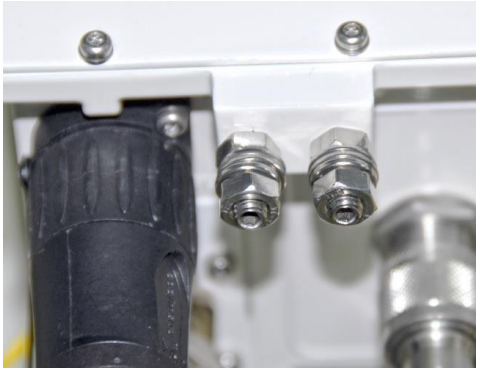

figure 4-17 Grounding bolts

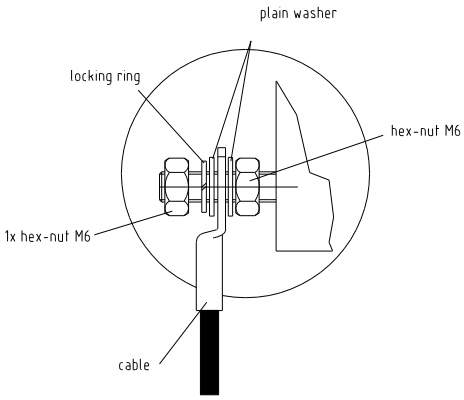

figure 4-18 Grounding bolt, schematic view

2. After loosening the hex nut(s), connect the earth-bonding cable between the two washers as illustrated in the figures above.

3. Then, fasten all parts again by tightening the hex nut(s).

4. Connect the other end of the ground wire to a suitable permanent ground following local electrical code practices.

4.2.5. Mains power connection

Before connecting electrical power to the units, the system must be grounded (earthed) as described in the previous chapter.

The Mains power must be connected to the Mains connector of the unit for operation of the EU. A power cable is delivered with each EU. The type of power cable delivered is dependent on the type of power supply in the unit.

The AC power cable is a 3.2 m (10.5 ft) 16 AWG cable with a 4-pin Amphenol C016 series plug on one end to connect to the EU Mains connector. The other end of the cable is un-terminated with 3 end splices to connect to the AC power source. A 10 m (33.7 ft) AC power cable is also available as an option.

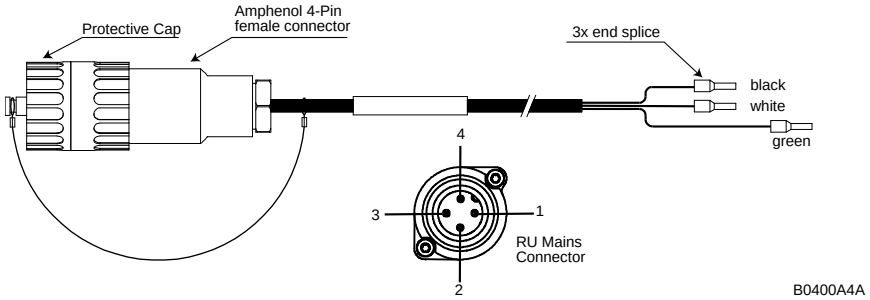

figure 4-19 AC power cable

4-Pin Amphenol C016 Series		
Pin	**Name**	**Color**
1	Phase	Black
2	Neutral	White
3	n.c.	n.c
4	Ground	Green

table 4-2 AC power cable

The standard DC power cable is a 3.2 m (10.5 ft) 13 AWG cable with a 4-pin Amphenol C016 series plug on one end to connect to the EU Mains connector. The other end of the cable is un-terminated with 2 end splices to connect to the -48 Vdc power source.

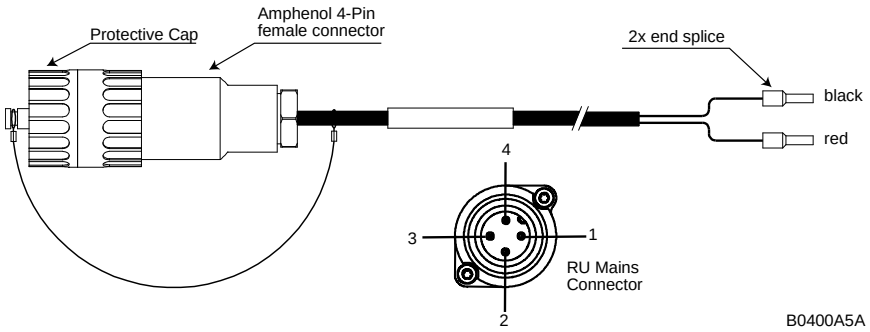

figure 4-20 DC power cable

4-Pin Amphenol C016 Series		
Pin	**Name**	**Color**
1	n.c	n.c
2	–48V	Black
3	0V	Red
4	n.c.	n.c

table 4-3 DC power cable

The Vdc/100 power cable is available for locations where the power drawn on each cable must be limited to a maximum of 100 VA. This cable is a 3.2 m (10.5 ft) 16 AWG cable with a 7-pin Amphenol C016 series plug on one end to connect to the EU Mains connector. The other end of the cable is un-terminated with 4 end splices to connect to the -48 Vdc power source.

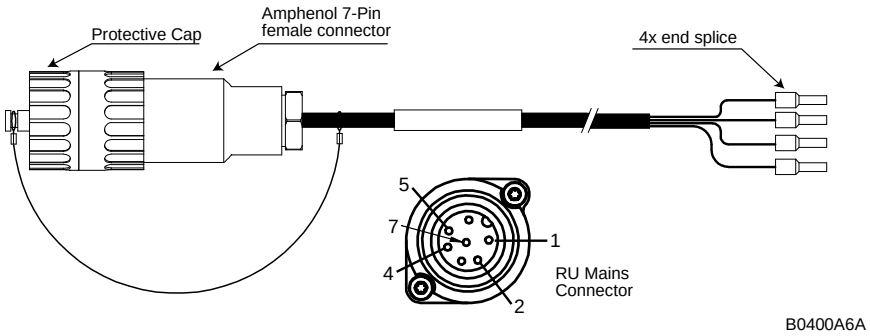

figure 4-21 Vdc/100 power cable

7-Pin Amphenol C016 Series		
Pin	**Name**	**Color**
1	0V	White
2	–48V	Black
3	n.c.	-
4	0V	Red
5	–48V	Green
6	n.c	-
7	n.c	-

table 4-4 Vdc/100 power cable

Notice: For the AC power supply connection, a minimum cross section of 1.5 mm^2 is required and for the DC power supply connection, a minimum cross section of 2.5 mm^2 is required. Each wire must observe the applicable national regulations regarding loop impedance, voltage drop, and methods of installation. Make sure to connect the correct voltage to the unit.

Notice: Do not connect or disconnect the power cable at the mains connector while power is on. Turn off mains* power before connecting the power cable at the unit, then, engage mains power again.

* Mains power must be interruptible with an external delay-actions mains breaker. For the mains breaker, observe the following recommendation:

120 Volt / 20 Amp max. or 240 Volt / 16 Amp, single-phase, 50 / 60 Hz AC service is needed, i.e. the external AC breaker should be 20 Amps max. for 120-Volt service or 13 to 16 Amps for 240-Volt service.

-48 Volt / 40 Amp max. DC service is needed, i.e. the external DC breaker should be 40 Amps max for -48 VDC service. For the DC power supply, observe the local regulations of the DC service provider.

Use the following method to install and connect the Mains power to the EU:

1. Locate the Mains power cable that was delivered with the EU.
2. Locate or install a suitable power junction box or receptacle near the unit and route the power cable from the power source to the EU. Do not connect the cable to the unit's Mains connector at this time. The power source must be interruptible.

3. The Mains cable must be properly secured observing local regulations and electrical codes. Be sure to allow enough slack in the cable at the EU to plug or unplug the cable into the Mains connector.
4. Wire the power cable to the junction box or receptacle. Refer to the color code and pin numbers shown in figure 4-19 (AC cable), figure 4-20 (DC cable), or figure 4-21 (Vdc/100 cable) depending on the type of power supply used by the unit.
5. With the cable's Mains plug disconnected from the EU, turn the circuit breaker on, unscrew the plug's protective cover, and carefully test the plug with a voltmeter to ensure that the voltage and polarity are correct.
6. Once the testing has been completed, turn off the circuit breaker.
7. Unscrew the protective cover from the Mains connector of the unit.
8. Insert the plug into the Mains connector (figure 4-22) and tighten the clamping ring until it is hand tight. Do not over-tighten the clamping ring.

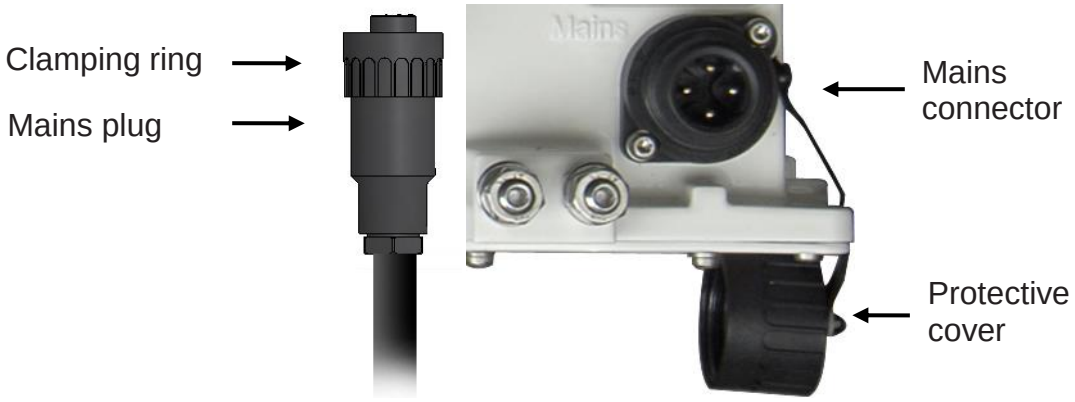

figure 4-22 Connect mains plug

4.2.6. Antenna connection

The Extension Unit has six 4.3-10 connectors. For mounting the cable connector, it is recommended to refer to the corresponding documentation of the connector manufacturer. The bending radius of the antenna cables must remain within the given specifications.

The selection of cable and antenna is an important consideration. Choose the type of cable best suited for the antenna. Consider that a cable with higher loss is less expensive but impairs performance.

Notice: Use an appropriate torque wrench for the coupling torques:

- for N-type connectors (2 N-m / 20 in lb) with 13/16 in opening, e. g. item no. 244379 available from the CommScope e-catalog
- for 4.3-10 type connectors (5 N-m, 44 in lb) with 22mm (7/8) in opening

Do NOT use your hands or any other tool (e.g. a pair of pliers). This might cause damage to the connector and lead to a malfunction of the unit.

Attention: To minimize passive inter-modulation (PIM) distortion, attention has to be paid to the physical condition of the connector junctions:

- Do not use connectors that show signs of corrosion on the metal surface.
- Prevent the ingress of water or dirt into the connector.
- Use protective caps for the connectors when not mounted.
- Before mounting clean the connectors with dry compressed air.
- Before mounting clean the mating surfaces of the connector with a lint-free alcohol-drenched cloth on a wooden or non-metallic item.
- Attach and torque the connectors properly.
- Avoid metallic abrasion when mounting the connectors by only screwing the connecting nut, but not turning the whole connector.
- Use a torque wrench to fasten the connector, see above.
- Clean the protective caps before mounting for antenna cable replacement.

4.2.6.1. Cleaning procedure for RF cable connectors

1. What is needed for the cleaning?
   a. Isopropyl alcohol or similar
   b. Compressed air
   c. Lint-free wipe
   d. Cotton buds

2. Remove protective cap from the RF connector.

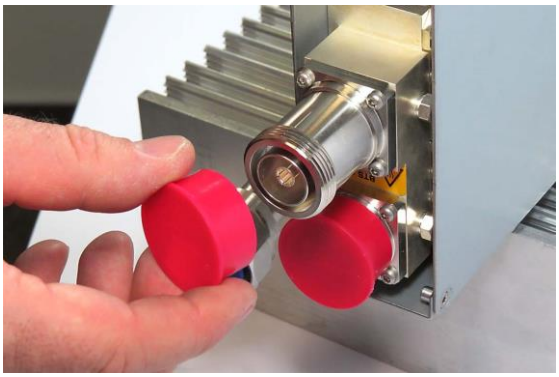

Caution: Risk of injury by flying particles when compressed air is used. Wear protective clothing, especially protective glasses.

3. Remove metal chips and small particles from the mating and inner surfaces of the connector using compressed air.

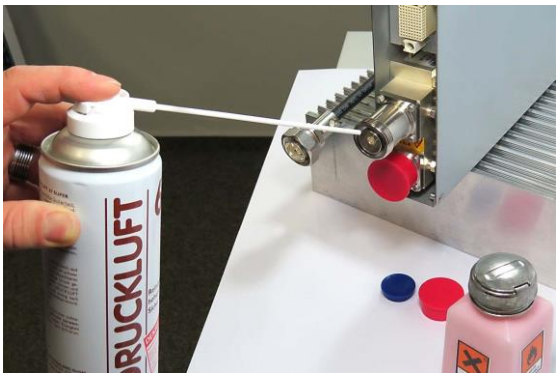

Warning: Flammable material. Risk of fire. Keep away from sources of ignition.

Caution: Eye irritant product. Risk of eye irritation. Avoid contact with eyes and skin. Wear protective clothing, especially protective glasses.

4. Clean the connector winding with lint-free wipe drenched with isopropyl alcohol.

5. Clean the lip of the inner ring with a cotton bud drenched with isopropyl alcohol.

6. Clean the inside surface of the inner ring with a cotton bud drenched with isopropyl alcohol.

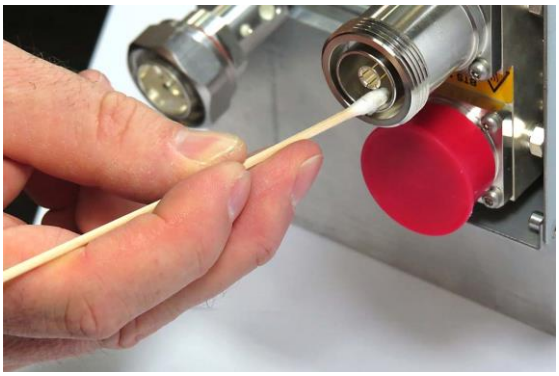

7. Clean the inside of the center conductor spring tines with a cotton bud drenched with isopropyl alcohol.

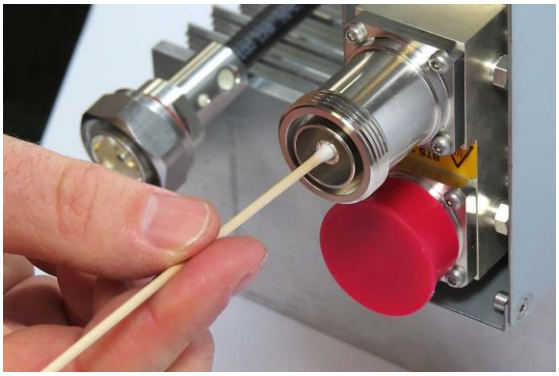

8. Clean in the similar way the connector of the connected cable. Remove protective caps from the unit connector first.

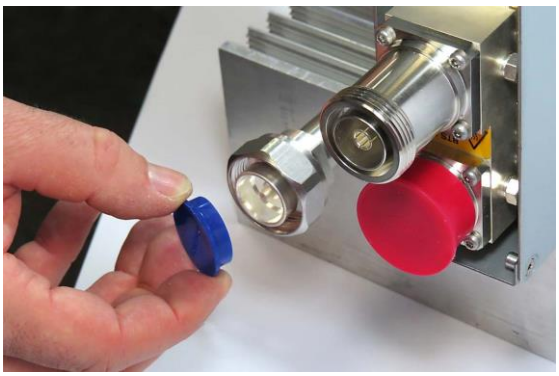

9. Remove metal chips and small particles from the mating and inner surfaces of the connector using compressed air.

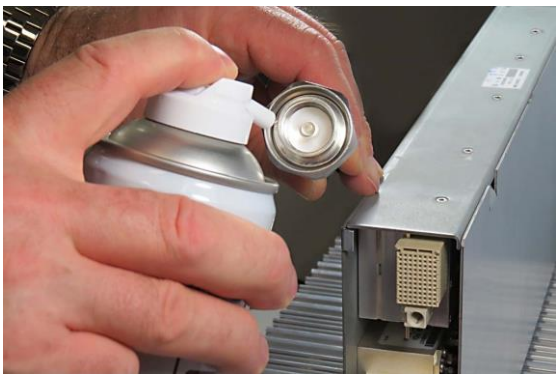

10. Continue with the winding area using lint-free wipe drenched with isopropyl alcohol.

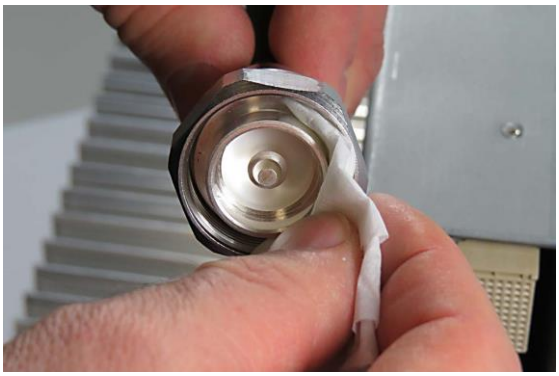

11. Continue with the inside mating surface of the inner ring.

12. Clean the outside surface of the center pin.

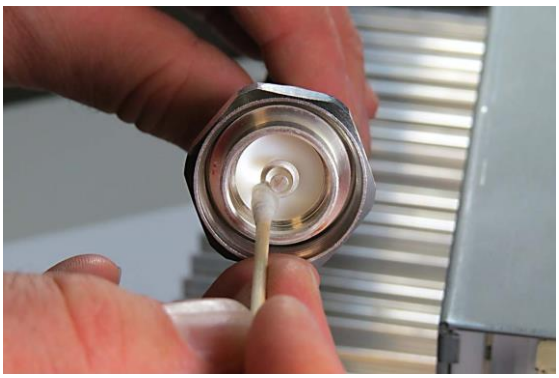

4.2.6.2. Antenna cable connector assembly

1. What is needed for the connector assembly?
    a. Torque wrench.
    b. (Adjustable) counter wrench

2. Join the connectors and turn the coupling nut until the thread grips.

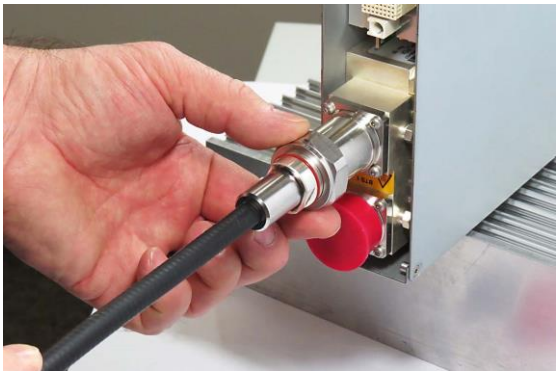

3. Push in the connector until it clicks.

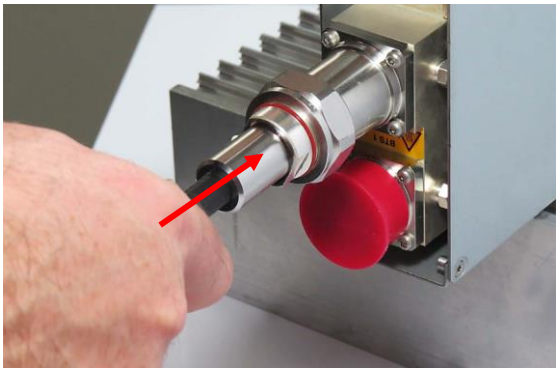

4. Fasten the coupling nut hand-tight. Do not turn the connector but the coupling nut only.

5. Retain the cable connector with the counter wrench and fasten the coupling nut with the torque wrench until the torque is applied (torque wrench clicks).

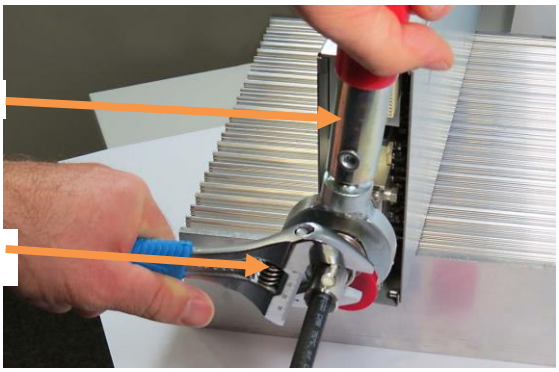

For angled antenna connectors use your hand to retain the cable connector and fasten the coupling nut with the torque wrench. Make sure only the coupling nut is turned, not the cable connector.

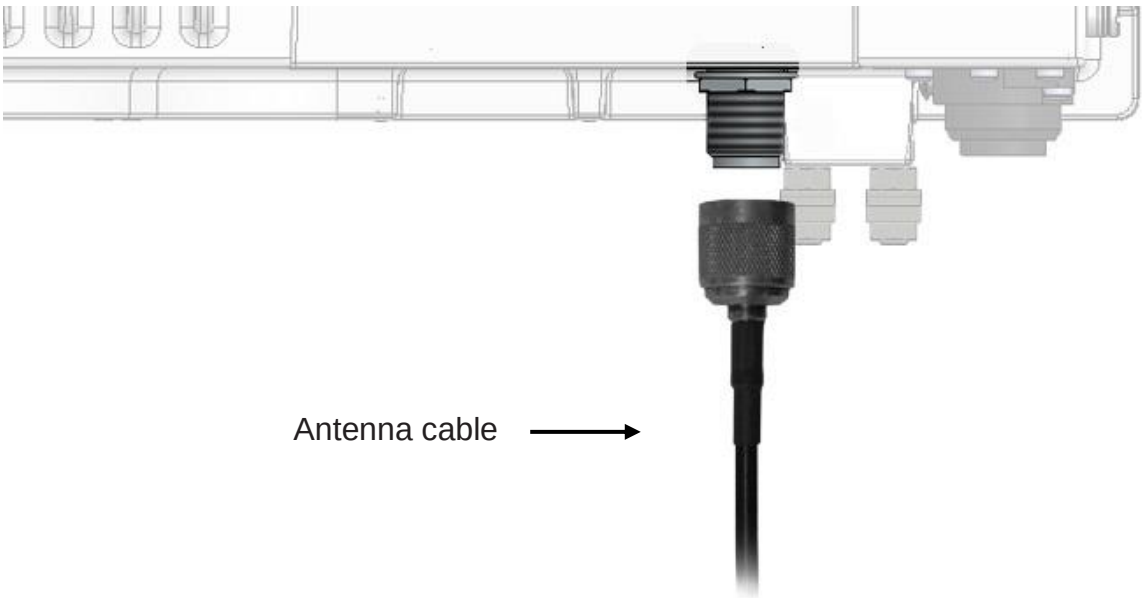

figure 4-23 Antenna connection

4.2.7. Expansion ports connections

The Expansion ports are QMA-F connectors that are used to connect to one or two Remote Units and an additional Extension Unit to provide extra bands of coverage. Ports are available for Path 1 and Path 2. The cables (1.5 m) required are included in the EU delivery

1. Connect an RF cable with QMA male connectors between the DL Expansion port connector of the RU and the RU UL port of the Extension Unit for Path 1. If a second RU is used, connect it to the RU DL expansion port of the EU for Path 2. Press the QMA connectors of the cable onto the Expansion port connectors until they click into place to connect the cable.
2. Connect an RF cable with QMA male connectors between the UL Expansion port connector of the RU and the RU UL port of the Extension Unit for Path 1. If a second RU is used, connect it to the RU UL expansion port of the EU for Path 2. Press the QMA connectors of the cable onto the Expansion port connectors until they click into place to connect the cable.
3. If an additional EU is used, connect an RF cable with QMA male connectors between the EU DL Expansion port connector of the 17EP/17EP EU to the DL Expansion port of the second Extension Unit for Path 1. Repeat the connection process for Path 2. Press the QMA connectors of the cable onto the Expansion port connectors until they click into place to connect the cable.
4. If an additional EU is used, connect an RF cable with QMA male connectors between the EU UL Expansion port connector of the 17EP/17EP EU to the UL Expansion port of the second Extension Unit for Path 1. Repeat the connection process for Path 2. Press the QMA connectors of the cable onto the Expansion port connectors until they click into place to connect the cable.

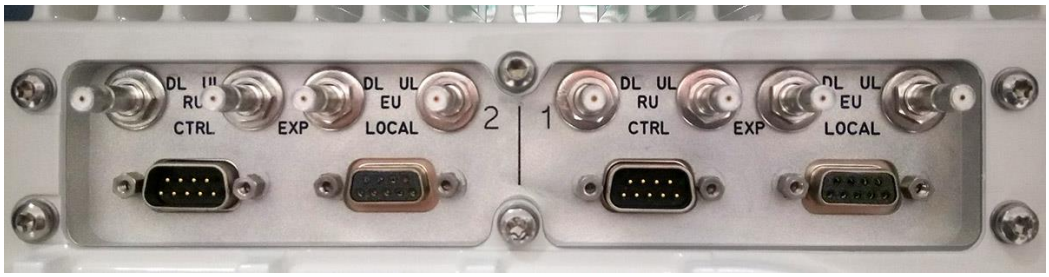

figure 4-24 Expansion ports

4.2.8. Control connector RS-232 LOCAL- Local Interface

These DB-9 female connectors are used for local access to this EU part and for external modem communication between this EU and an additional “downstream” EU.

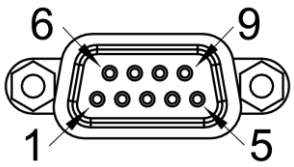

figure 4-25 RS-232 connector

DB-9 Female	
PIN	**Assignment**
1	Booster presence IN
2	RS232 Tx
3	RS232 Rx
4	n.c.
5	GND
6	n.c.
7	n.c.
8	Booster presence OUT
9	n.c.

table 4-5 RS-232 connector, pin assignment

Connect the RS-232 cable (1.5m, contained in delivery of EU) from the LOCAL port of this EU to the CTRL port of the “downstream” EU.

4.2.9. Control connector RS-232 CTRL

These DB-9 male connectors are used for external modem communication between this EU and an “upstream” RU or EU.

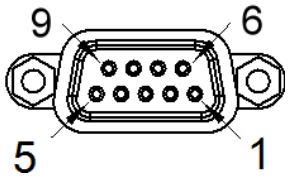

figure 4-26 RS-232 connector

DB-9 Male	
PIN	**Assignment**
1	Booster presence OUT
2	RS232 Rx
3	RS232 Tx
4	n.c.
5	GND
6	n.c.
7	n.c.
8	Booster presence IN
9	n.c.

table 4-6 RS-232 connector, pin assignment

Connect the RS-232 cable (1.5m, contained in delivery of EU) from the CTRL port of this EU to the LOCAL port of the “upstream” RU or EU.

Typical RS-232 connections for a system with up to two Remote Units and up to three Extension Units are shown in the table below:

RS-232 LOCAL and CTRL Connections	
Path 1 (RU 1)	**Path 2 (RU 2)**
RU 1 LOCAL → EU 1 CTRL Path 1	RU 2 LOCAL → EU 1 CTRL Path 2
EU 1 LOCAL Path 1 → EU 2 CTRL Path 1	EU 1 LOCAL Path 2 → EU 2 CTRL Path 2
EU 2 LOCAL Path 1 → EU 3 CTRL Path 1	EU 2 LOCAL Path 2 → EU 3 CTRL Path 2
EU 3 LOCAL Path 1 → Not Connected	EU 3 LOCAL Path 2 → Not Connected

table 4-7 RS-232 LOCAL and CTRL connections

4.3. Low Power EU Alarms

4.3.1. Bite and alarms

The Built-In Test concept comprises the monitoring of the power supplies and the power amplifiers.

All alarms that occur can be checked via software at the Master Unit.

4.3.2. Status LED alarms

For local supervision, a status LED on the connector panel of the Extension Unit adjacent to the Expansion ports provides a visual warning of an alarm condition. The color of the LED indicates the severity of the alarm. Detailed alarm information is available through the ION-U software interface. This table lists the alarm conditions and possible on-site measures that could be performed to resolve the issues responsible for triggering the alarms.

Alarm Name	Description	Remedy
Temperature Alarm	too high temperature	check ventilation and environment
VSWR Alarm	bad RF cabling / mismatched antenna	check cable / antenna
RF Low Output AWS	too low RF signal	check BTS output level/attenuator configuration/RF cabling
DL AWS band alarm	hw failure on RF section	change unit
UL AWS band alarm	hw failure on RF section	change unit
UL Overdrive/ALC Limiting AWS	too high RF signal feeding device	check unit/attenuator configuration
Internal bus alarm	internal I2CBUS communication malfunction	change unit
External 1 Alarm	external input alarm	check external device/ check alarm connection
External 2 Alarm	external input alarm	check external device/ check alarm connection
Power Supply 1 Alarm	internal power supply alarm	change/verify unit
Power Supply 2 Alarm	internal power supply alarm	change/verify unit
Power Supply 1 exceeded load threshold	too high power supply load	change/verify unit
Power Supply 2 exceeded load threshold	too high power supply load	change/verify unit
Power Supply 1 partial availability	internal power supply alarm / partial power available	change/verify unit
Power Supply 2 partial availability	internal power supply alarm / partial power available	change/verify unit
High Power Consumption	too high power supply load	change/verify unit
Low Power Consumption	too low power supply load	change/verify unit

table 4-8 Status LED alarms

4.4. External Alarm Inputs

With the external alarm inputs, it is possible to monitor the status of connected devices, e.g. a UPS, via software. All alarm inputs are normally high (5 V) without connection. The polarity (high/ low) can be set via the software at the Master Unit (for details please see the appropriate ION-U software manual).

The device to be monitored must be connected so that the alarm contacts will be closed in case of an alarm (I max = 8 mA). The alarm inputs are potential-free with common ground (earth).

Subminiature circular connectors series 712 with five contacts, which are contained in the alarm kit, can be ordered directly from the Binder Connector Group, the manufacturer, or indirectly from CommScope.

4.5. Troubleshooting

The status of the Extension Unit can be checked via the Master Unit (for details please refer to the ION-U software manual). Locally, the status can be checked at the LED, see chapter *4.3.2.*

5. Low Power EU Maintenance

5.1. General

Read and observe chapter 1.2 Health and Safety.

☞ **Note:** The Extension Unit does not require preventative maintenance measures.

Maintenance of the ION-U Low Power units should be performed by replacing only components that are described in this chapter. In order to maintain the warranty, avoid unintentional damage to the seals on the modules.

The spare parts list includes only units that can be replaced in the field without tuning or soldering work.
Please contact your CommScope sales representative or DCCS Technical Support for a current ION-U LP EU parts list.

☞ **Note:** When sending back the unit, use appropriate packaging. Use of the original packaging for shipping the unit is strongly recommended.

☞ **Note:** Defective parts should only be replaced by original parts from the supplier. All service work performed inside the housing is performed at the users own risk.

☞ **Note:** Label any unlabeled cables before disconnecting them to ensure correct reconnection.

For most maintenance procedures, appropriate tools are required to ensure correct handling. All of these tools can be ordered from the supplier.

☞ **Note:** All unit screws have a right-hand thread, and are tightened by turning the screws clockwise and loosened by turning them counter-clockwise with an appropriate tool.

Due to the design of the Extension Unit, the power supply is the only component that should be replaced in the field. Please contact the supplier for replacement of any other components.

5.2. EU Power Supply Replacement

The power supply for the EU is a field replaceable module. The type of power supply used by the unit (AC, DC, or Vdc/100) is dependent on the model number.

Attention: Before starting any maintenance on the EU, read and observe chapter 1.2 Health and Safety and the electrical installation information in chapter 4.2.1 Health and Safety for electrical installation.

1. **Danger: Electrical hazard. Danger of death or fatal injury from electrical current inside the unit in operation. Before opening the unit, disconnect mains power.**

2. **Caution: The unit reaches high temperature in operation. Risk of burns by hot surface. Do not touch the unit before it has sufficiently cooled down.**

1. Switch off the circuit breaker supplying power to the EU.
2. Once you have confirmed that the power has been shut down, remove Mains power connector from the unit.

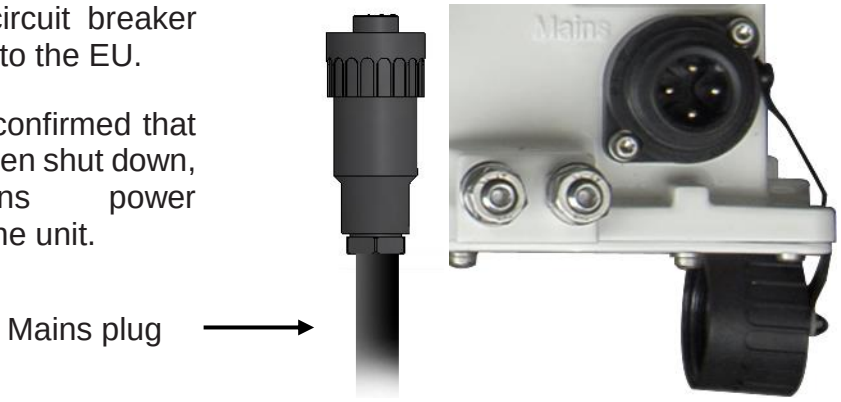

figure 5-1 Disconnect mains power

3. Locate the power supply on the right side of the Extension Unit.

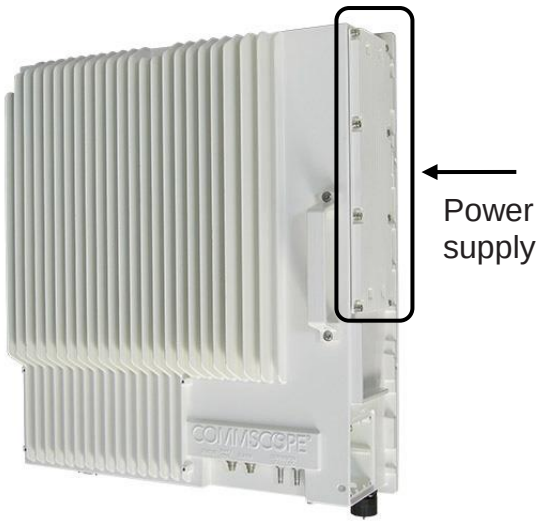

figure 5-2 EU power supply location

4. Use a #2 Phillips head or slotted screwdriver to loosen the 8 universal slot/Phillips captive power supply screws and carefully remove the supply. The weight of the power supply must be supported as you loosen the screws to prevent damage to the supply.

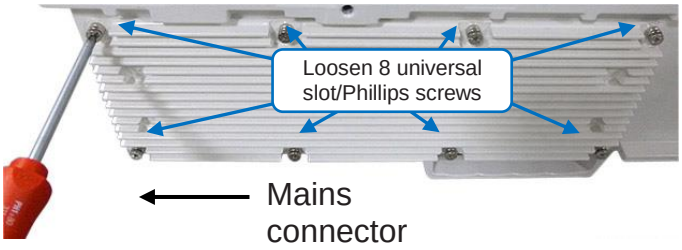

figure 5-3 8 EU power supply screws

5. Carefully remove the power supply from the unit. Do not attempt to support the weight of the supply with the attached input and output cables.

figure 5-4 EU power supply with cables

6. Locate the input cable connector for the power supply on the right side of the supply.
7. Loosen the 3 Phillips head terminal screws and remove the connector.

figure 5-5 EU power supply input cable

8. Locate the output connector for the power supply on the left side of the supply.
9. Loosen the 2 Phillips head screws and remove the output connector.

figure 5-6 EU power supply output cable

10. Remove the defective supply.

figure 5-7 EU with power supply removed

11. Replace the defective power supply with the new power supply.
    It is very important to confirm that the replacement supply is the same type as the original supply. **The AC, DC, and Vdc/100 supplies are not interchangeable.**
12. Reconnect the input and output connectors, and tighten the associated terminal screws.

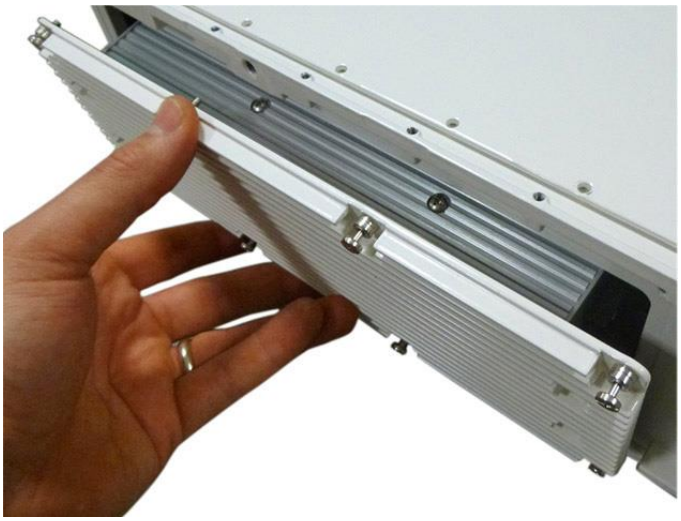

figure 5-8 EU with replacement power supply

13. Insert the power supply into the EU carefully to avoid damaging any cables. The supply must be supported until the 8 universal slot/Phillips captive power supply screws have been tightened.
14. Tighten the 8 universal slot/Phillips captive power supply screws.

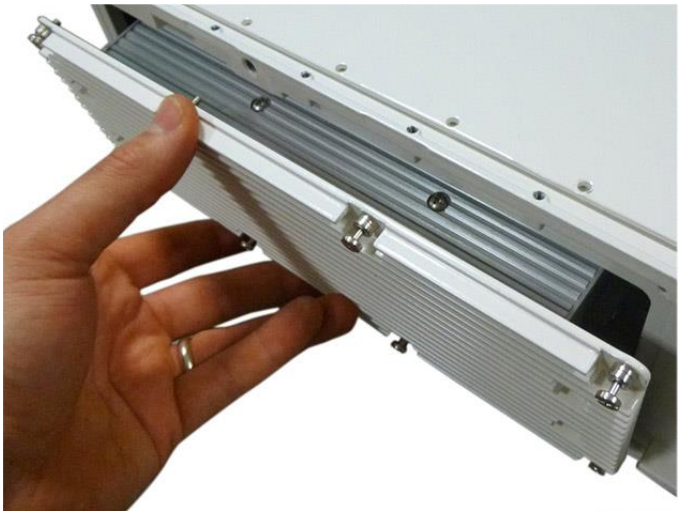

figure 5-9 EU insert power supply

15. Reconnect the Mains power plug.
16. Switch on the breaker and check the EU for proper operation.

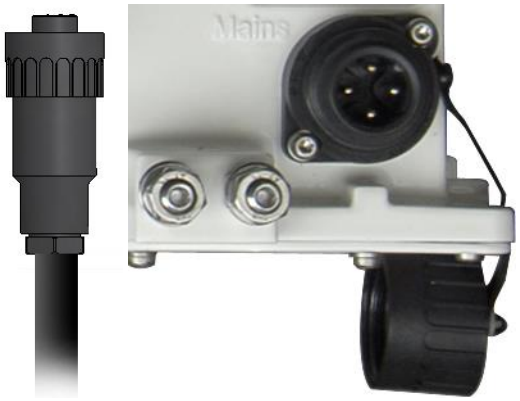

figure 5-10 Reconnect mains power

6. Appendix

6.1. Illustrations

6.1.1. Dimensions and Mounting

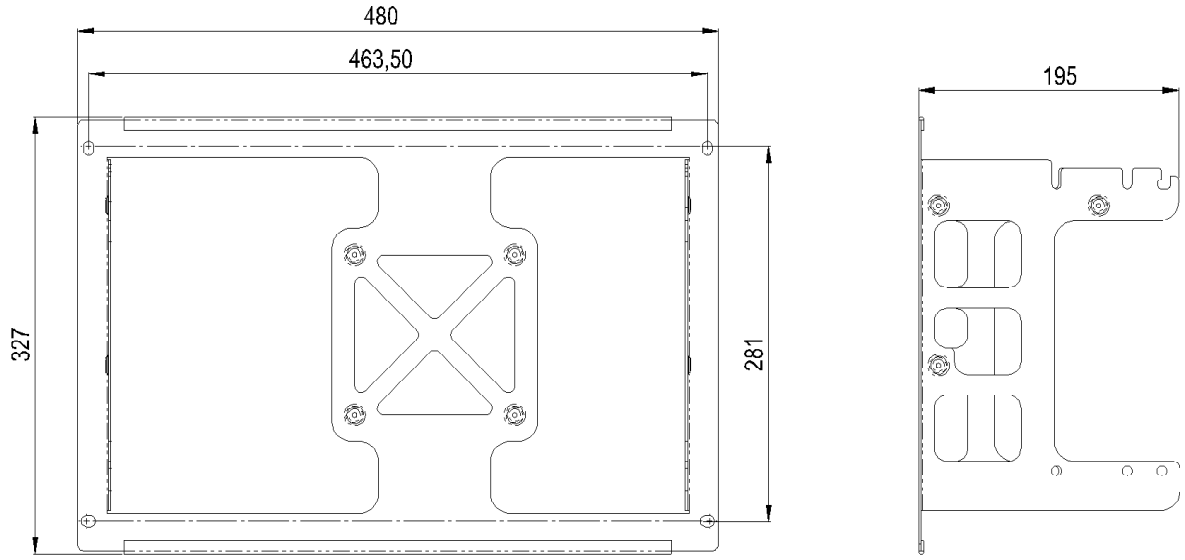

figure 6-1 ION-U Low Power EU mounting bracket

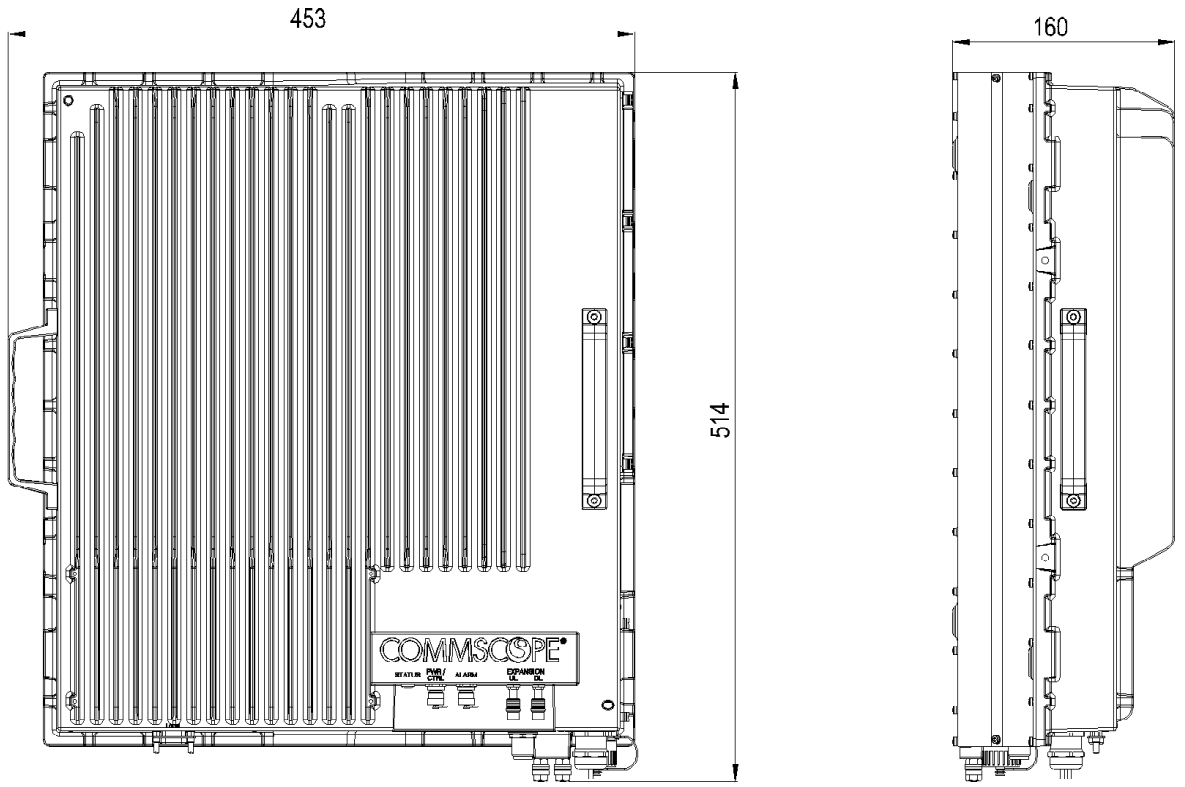

figure 6-2 ION-U Low Power Unit dimensions

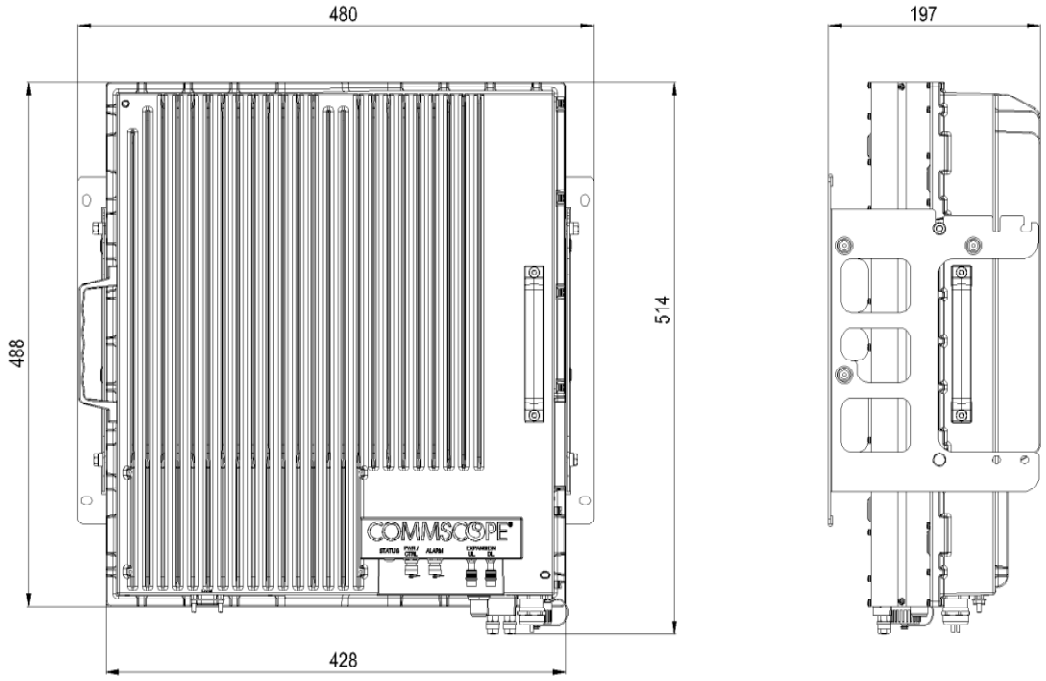

figure 6-3 Installation drawing of ION-U L Unit single

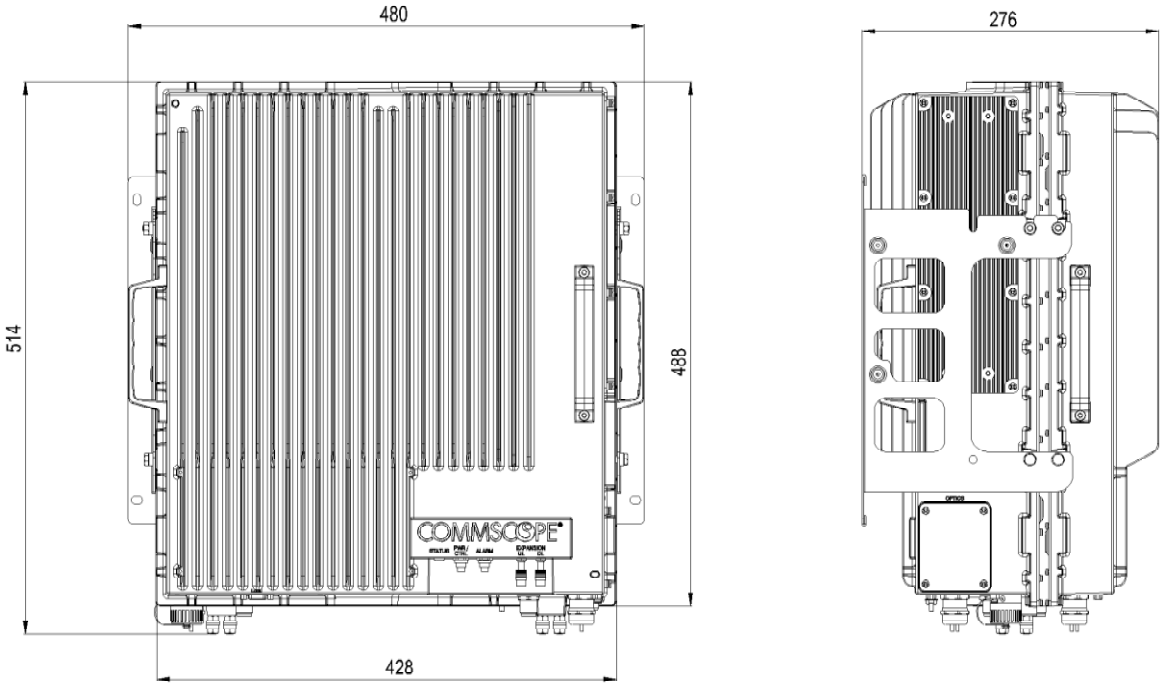

figure 6-4 Installation drawing of ION-U L Unit dual

6.1.2. ION-U EU L Cable Kits

A cable kit is included with each ION-U Low Power Extension Unit as shown in table 6-1 below. One PSU cable (AC or DC version) is included with each Remote Unit.

ION-U EU L Cable Kit		
Qty	**Cable and Description**	**Length**
1	PSU cable (Either AC or DC version depending on power supply type)	
2	4.3-10-M to 4.3-10-M (equivalent cable loss of 0.141”, outdoor rated)	1.5 m
2	N-M to 4.3-10-F adapter	
4	QMA-M to QMA-M (equivalent cable loss of 0.141”, outdoor rated)	1.5 m
2	RS232 for modem communication RU-EU	1.5 m

table 6-1 Extension Unit Cable kit

6.1.3. LP RU, EU L 25T/25T, and EU L 23/23 Ports

Low Power Remote Unit

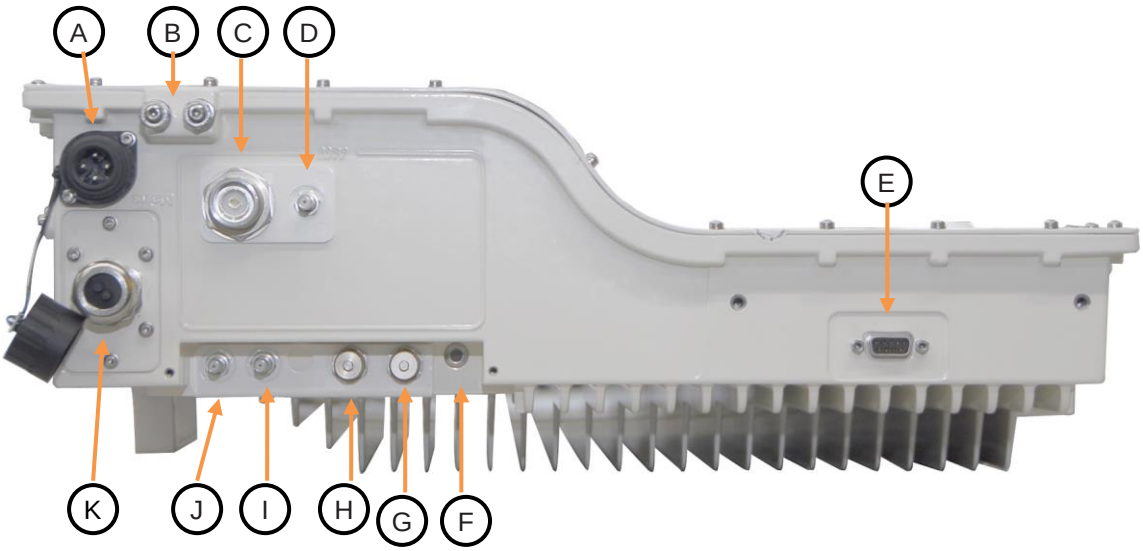

A	Mains power connector	G	Pwr/Ctrl connector
B	Grounding (earthing) bolts	H	Alarm connector
C	RF antenna port	I	Expansion UL port
D	Probe	J	Expansion DL port
E	Local Port RS-232	K	Optical ports
F	Status LED		

figure 6-5 LP RU connectors and Status LED

EU L 23/23 Extension Unit

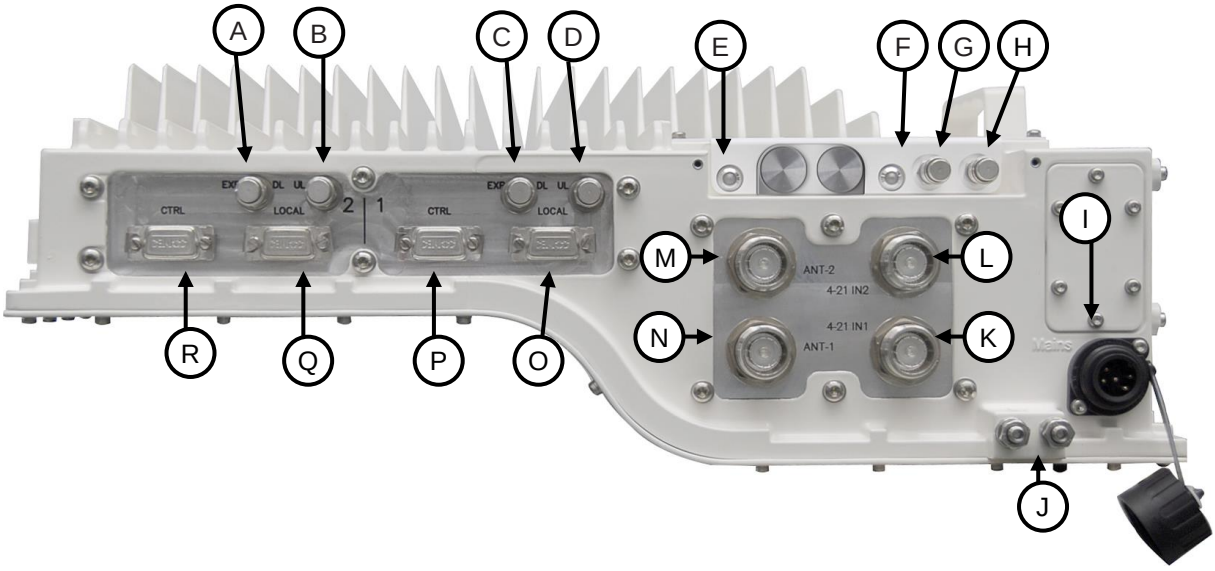

A	Expansion DL port path 2	J	Grounding (earthing) bolts
B	Expansion UL port path 2	K	RF antenna port 4-21 IN path 1
C	Expansion DL port path 1	L	RF antenna port 4-21 IN path 2
D	Expansion UL port path 1	M	RF antenna port OUT path 2
E	Status LED path 2	N	RF antenna port OUT path 1
F	Status LED path 1	O	Local Port RS-232 path 1
G	Probe path 2	P	Ctrl connector path 1
H	Probe path 1	Q	Local Port RS-232 path 2
I	Mains power connector	R	Ctrl connector path 2

figure 6-6 EU L 23/23 connectors and Status LEDs

EU L 25T/25T Extension Unit

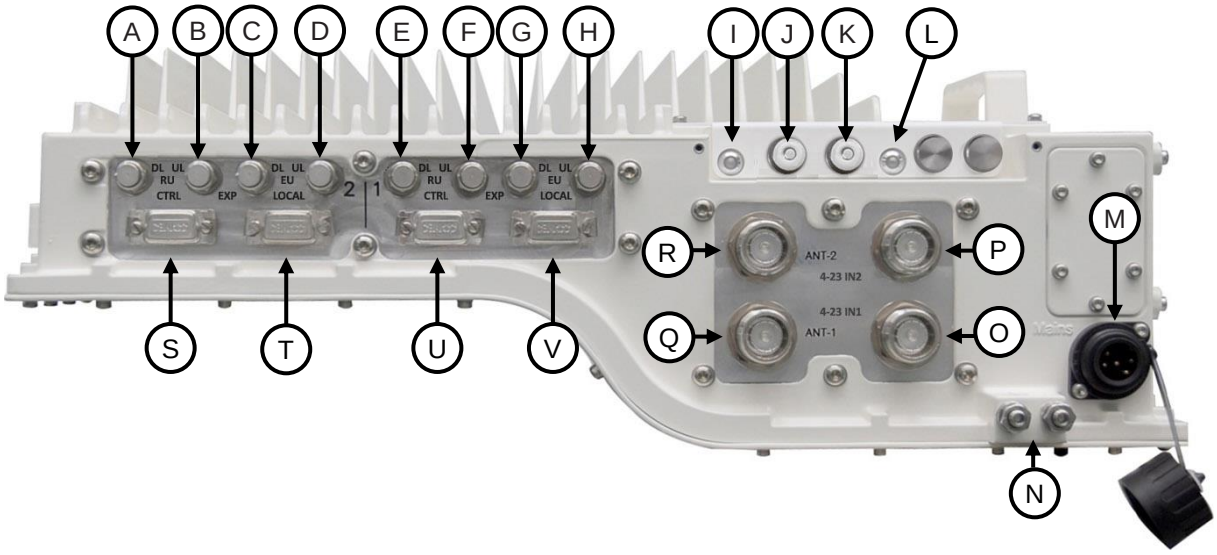

A	Expansion DL RU port path 2	L	Status LED path 1
B	Expansion UL RU port path 2	M	Mains power connector
C	Expansion DL EU port path 2	N	Grounding (earthing) bolts
D	Expansion UL EU port path 2	O	RF antenna port 4-23 IN1 path 1
E	Expansion DL RU port path 1	P	RF antenna port 4-23 IN2 path 2
F	Expansion UL RU port path 1	Q	ANT-1 RF antenna port OUT path 1
G	Expansion DL EU port path 1	R	ANT-2 RF antenna port OUT path 2
H	Expansion UL EU port path 1	S	CTRL connector path 2
I	Status LED path 2	T	Local Port RS-232 path 2
J	Alarm connector path 2	U	CTRL connector path 1
K	Alarm connector path 1	V	Local Port RS-232 path 1

figure 6-7 EU L 25T/25T connectors and Status LEDs

6.2. Specifications

This manual is valid for the following Extension Units:

ID No	Denomination
7769134-xxxx	ION-U EU L 17EP/17EP
7769134-0001	ION-U EU L 17EP/17EP VAC
7769134-0002	ION-U EU L 17EP/17EP VDC/100

* The xxxx suffix is the identifier for the specific configuration of the Remote or Extension Unit.

For ION-U Low Power Extension Unit specifications, please refer to the online CommScope Product Catalog at
http://www.commscope.com/Product-Catalog/Wireless/Product/Distributed-Coverage-and-Capacity/
or contact Technical Support at https://www.CommScope.com/wisupport.

6.3. Spare Parts

Maintenance of the RU should be performed on an FRU (Field Replaceable Unit) basis only. If any other part not contained in the following list needs to be replaced, please contact customer service for additional instructions.

Designation:	ID No
Power Supply Unit Vac RPS150-Vac	7658962-xx
Power Supply Unit Vdc 100 RPS150-Vdc/100	7662384-xx
Expansion port RF cable, 1.5 m	F1A-PQMQM-1M5
4.3-10 to 4.3-10 RF cable, 1.5 m	F1A-HMHM-1M5-P
RS232 cable, 1.5 m	7702134-xx

The manufacturer reserves the right to replace the spare parts listed above by equivalent substitutes.

7. List of Changes

Version	Changes	Release Date
M0200AJA	Initial Release	02-May-2018

8. Index

A

Alarms
- Bite and Alarms 50
- External Inputs 52
- Status LED 51

Ant IN 37
Ant RF 37

B

Block Diagram
- ION-U EU L 17EP/17EP 17

C

Cable Kits 60
Commissioning
- General 23

CommScope 13
Compliance 9
Connections
- Antenna 42
- Power 39

Connectors
- EU Ctrl connector 22
- EU Mains connector 22

Contact Addresses, Customer Support 14, 15
Ctrl connector 37

D

Declaration of Conformity (DoC) 13

E

EU AC power cable 39
EU DC power cable 39
EU Power Supply Replacement 54
EU Vdc/100 power cable 40
Expansion DL 37
Expansion ports 48
Expansion UL 37

G

Grounding (Earthing) 38
Grounding Bolts 37

H

Health and Safety 8

I

Illustrations 58
Installation
- Electrical 35
- Mechanical 23

M

Mains (Vac/Vdc) 37
Mains (Vdc/100) 37
Mains connector 39
Maintenance 53
Mechanical installation
- Mounting bracket 24
- Threaded pins 27

MIMO applications 18
Mounting bracket
- To a pole 25
- To a wall 24

P

Ports
- Antenna Port OUT 21, 22
- Coupling Port 22
- EU L 17EP/17EP 21
- EU L 23/23 61
- EU L 25T/25T 62
- Expansion Ports 22
- LP RU 60
- RS-232 port 22

Property Damage Warnings 8
PWR/CTRL 37

R

RS-232 37

S

SISO applications 18
Spare Parts 53, 63
Status 37

T

Troubleshooting 52

COMMSCOPE®