Annex acc. to FCC Title 47 CFR Part 15
relating to
Hirschmann Car Communication GmbH
920287A

Annex no. 5
User Manual
Functional Description

Title 47 - Telecommunication
Part 15 - Radio Frequency Devices
Subpart C – Intentional Radiators
ANSI C63.4-2014
ANSI C63.10-2013

ilac-MRA

DAkkS Deutsche Akkreditierungsstelle D-PL-12053-01-00

TÜV NORD Hochfrequenztechnik GmbH & Co. KG
Rottland 5a, 51429 Bergisch Gladbach, Germany
Tel: +49 2207 9689-0
Fax +49 2207 9689-20

User Manual / Functional Description of the test equipment (EUT)

TÜV NORD Hochfrequenztechnik GmbH & Co. KG
Rottland 5a, 51429 Bergisch Gladbach, Germany
Tel: +49 2207 9689-0
Fax +49 2207 9689-20

920287A

Transceiver Remote Entry

User's manual / Operational Description

	Name, Department	Date	Unterschrift
Autor	Jörg Maisenbacher		
Freigabe			
Verteiler	HCC Antennen		

Diese Unterlage ist unser Eigentum. Jede Vervielfältigung, Verwertung, Mitteilung bzw. Weitergabe an Dritte ohne unsere vorherige Zustimmung ist untersagt.
Zuwiderhandlungen verpflichten zu Schadenersatz. Alle Rechte für den Fall der Patenterteilung, Gebrauchs- bzw. Geschmacksmustereintragung vorbehalten.
This document is our property. Any duplication, exploitation, transmission to a third party without our prior agreement is not allowed. In case of contravention we claim damages.
All rights for patent application, use- or design samples reserved.

Table of Contents

1 Change history 2
2 Overview 3
2.1 Block diagram 3
2.2 Connections 3
2.3 Interaction 4
2.4 Installation 4
2.5 Operating temperature range 4
2.6 Interface 4
3 Operational characteristics 4
3.1 General Information 4
3.2 Receiver 5
3.3 Transmitter 5
3.4 Transmission 5
3.5 Frequency Generation and Stability 6
3.6 Further signal-sources (clock generators): 6
3.7 ON / OFF State of Oscillators in Dependency of Operatingmode 7
4 Operational Procedures 7

1 Change history

Datum	Chapter	Change	Author	Version
29.11.10	all	initial release	Maisenbacher	V0.1
01.09.15		Optically improved	Nebel	V1.1
12.12.18	all	mods	Nebel	V1.5

Diese Unterlage ist unser Eigentum. Jede Vervielfältigung, Verwertung, Mitteilung bzw. Weitergabe an Dritte ohne unsere vorherige Zustimmung ist untersagt.
Zuwiderhandlungen verpflichten zu Schadenersatz. Alle Rechte für den Fall der Patenterteilung, Gebrauchs- bzw. Geschmacksmustereintragung vorbehalten.
This document is our property. Any duplication, exploitation, transmission to a third party without our prior agreement is not allowed. In case of contravention we claim damages.
All rights for patent application, use- or design samples reserved.

2 Overview

2.1 Block diagram

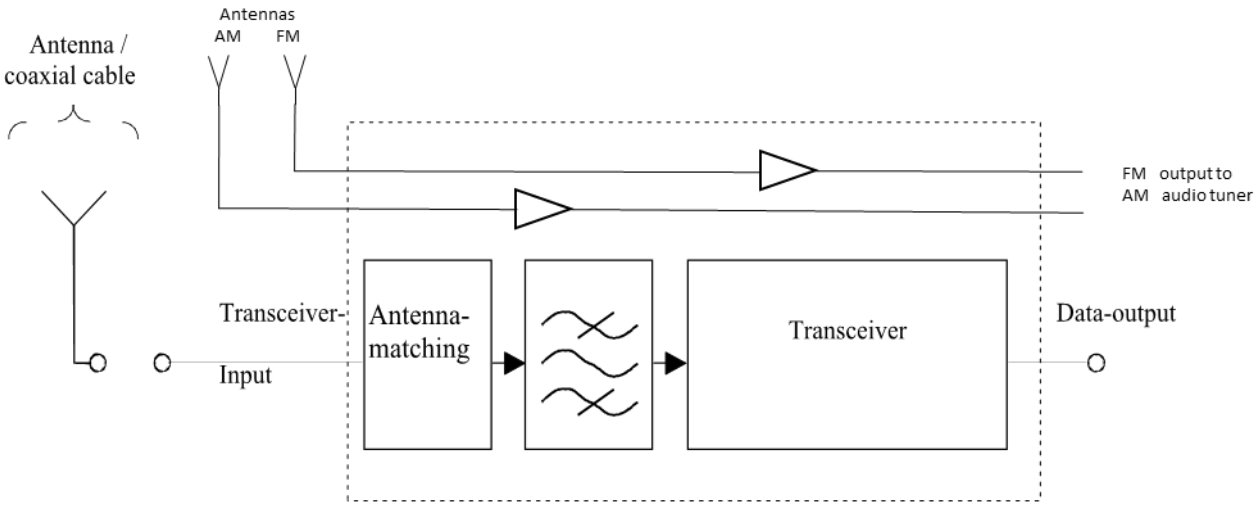

Figure 1: Blockdiagram of the remote-entry circuit

2.2 Broadcast reception amplifier

AM 530-1600kHz
FM 88-108MHz

2.3 Connections

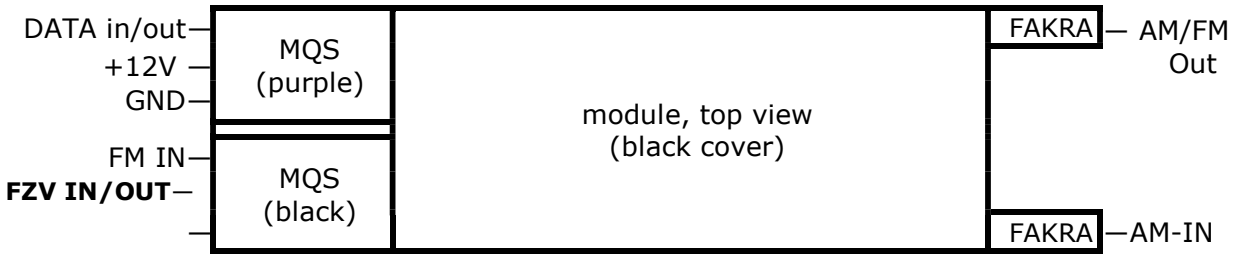

Figure 2: schematic view of module of the complete antenna amplifier (**FZV IN/OUT** is RF in/output for remote-entry System)

Diese Unterlage ist unser Eigentum. Jede Vervielfältigung, Verwertung, Mitteilung bzw. Weitergabe an Dritte ohne unsere vorherige Zustimmung ist untersagt.
Zuwiderhandlungen verpflichten zu Schadenersatz. Alle Rechte für den Fall der Patenterteilung, Gebrauchs- bzw. Geschmacksmustereintragung vorbehalten.
This document is our property. Any duplication, exploitation, transmission to a third party without our prior agreement is not allowed. In case of contravention we claim damages.
All rights for patent application, use- or design samples reserved.

2.4 Interaction

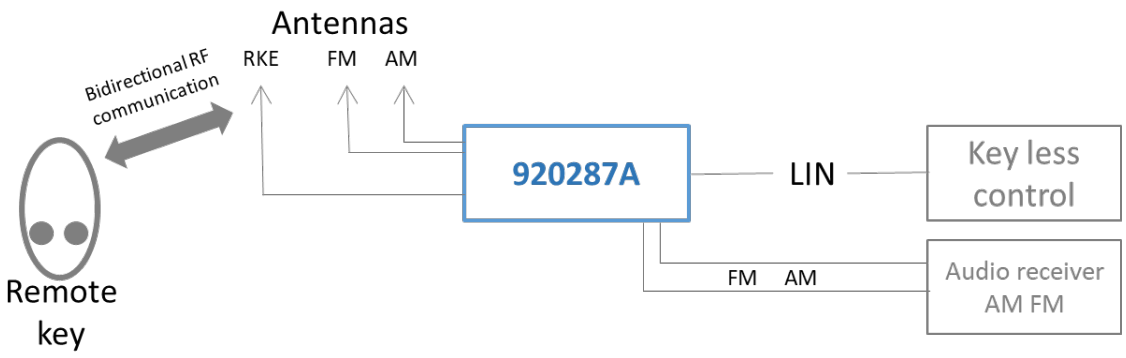

2.5 Installation

The remote control box is installed inside a vehicle and behind the cabin cover. Only service personel is able to touch or handle it.

2.6 Operating temperature range

-40 … +85°C

2.7 Interface

- Supply Voltage (+12V)
- RF-Interface; input / output
- Data-Interface 1-wire [bidirectional, digital, open-collector]

3 Operational characteristics

3.1 General Information

parameter		min	max	
Supply voltage		7,0	18,0	V
Current consumption	Cyclic for 55ms pre-signal, 3 channels (f_0-450kHz, f_0, f_0+450kHz)		700	µA

Diese Unterlage ist unser Eigentum. Jede Vervielfältigung, Verwertung, Mitteilung bzw. Weitergabe an Dritte ohne unsere vorherige Zustimmung ist untersagt.
Zuwiderhandlungen verpflichten zu Schadenersatz. Alle Rechte für den Fall der Patenterteilung, Gebrauchs- bzw. Geschmacksmustereintragung vorbehalten.
This document is our property. Any duplication, exploitation, transmission to a third party without our prior agreement is not allowed. In case of contravention we claim damages.
All rights for patent application, use- or design samples reserved.

Current consumption when strong interfering signals	Cyclic for 55ms pre-signal, 3 channels (f_0-450kHz, f_0, f_0+450kHz) interfering signals > -40dBm		900	µA
Current consumption (TX)	@+10dBm output power @ 50Ohm		40	mA
Frequency range	ECE	433,44	434,40	MHz
Max antenna gain			-2	dBi

3.2 Receiver

parameter		**min**	**max**	
Sensitivity	Matched to 50 Ohm Symbol rate: 10kBaud Manchester FSK-Modulation ±10kHz deviation		-98	dBm
Blocking **(ratio of interfering signal to power of receiving signal)**	≥ 150 kHz		≥ 30	dB
	≥ 225 kHz		≥ 40	dB
	≥ 450 kHz		≥ 45	dB
	≥ 800 kHz		≥ 50	dB
	≥ 1500 kHz		≥ 60	dB
	≥ 2500 kHz		≥ 70	dB
	≥ 5000 kHz		≥ 80	dB

3.3 Transmitter

parameter		**min**	**max**	
Transmit power	ECE	+5	+10	dBm

The transmit power is referenced to the interface between module and car-antenna.

3.4 Transmission

3.4.1 Data rates

for digital 1-wire and RF:

10 kBit / sec (ECE, USA) ≤ ±1,0 %

Diese Unterlage ist unser Eigentum. Jede Vervielfältigung, Verwertung, Mitteilung bzw. Weitergabe an Dritte ohne unsere vorherige Zustimmung ist untersagt.
Zuwiderhandlungen verpflichten zu Schadenersatz. Alle Rechte für den Fall der Patenterteilung, Gebrauchs- bzw. Geschmacksmustereintragung vorbehalten.
This document is our property. Any duplication, exploitation, transmission to a third party without our prior agreement is not allowed. In case of contravention we claim damages.
All rights for patent application, use- or design samples reserved.

3.4.2 Modulation

Frequency modulation FSK with 10kHz deviation.

3.4.3 Channel definition

The following table shows the center-frequencies for each channel.

The frequency-separation between two adjacent channels is 450 kHz.

Channel name		**Center-frequency**	
name	**Short name**		
channel 1	CH1	ECE:	433,47 MHz
channel 2	CH2	ECE:	434,37 MHz
channel 3	CH3	ECE:	433,92 MHz

table 1: center frequencies of all channels

3.4.4 Carrier frequency

The carrier frequency has a tolerance (including influences because of temperature, aging, manufacturing tolerance) of:

ECE: 433,47 MHz ± 70ppm, 433,92 MHz ± 70ppm, 434,47 MHz ± 70ppm

3.5 Frequency Generation and Stability

The RF-frequencies are created with a fractional N PLL (phase locked loop). The frequency of the local oscillator is controlled by the fractional N Synthesizer. The discrete channel-frequencies are configured by digital settings

- The RX and TX- frequency deviation is ±10 kHz
- The RX intermediate frequency (IF) is 250kHz.
- RX receiver channel bandwidth is 165kHz.
- The PLL is referenced to a crystal oscillator
- The crystal oscillator (XTO) is operated at f_{XTO} = 24,2879 MHz
- The tolerance of the crystal is ±70ppm.

3.6 Further signal-sources (clock generators):

- <u>Slow RC Oscillator:</u> f_{SRC}=125kHz ±5% Sleep Time reference in polling mode.
- <u>Fast RC Oscillator:</u> f_{FRC}=6.36MHz±10% System clock reference CPU.

Diese Unterlage ist unser Eigentum. Jede Vervielfältigung, Verwertung, Mitteilung bzw. Weitergabe an Dritte ohne unsere vorherige Zustimmung ist untersagt.
Zuwiderhandlungen verpflichten zu Schadenersatz. Alle Rechte für den Fall der Patenterteilung, Gebrauchs- bzw. Geschmacksmustereintragung vorbehalten.
This document is our property. Any duplication, exploitation, transmission to a third party without our prior agreement is not allowed. In case of contravention we claim damages.
All rights for patent application, use- or design samples reserved.

3.7 ON / OFF State of Oscillators in Dependency of Operatingmode

- Polling cycle time : 50ms
- active (without signal): t_{AKTIV}= 3.05ms (typ.)
- Sleep-phase: t_{Sleep}=46.95ms (typ.)

Operating mode =>	**Init**	**Polling**		**TX-Mode**	**RX-Mode**
		active	sleep		
XTO Oscillator (f_{XTO}=24,2879MHz)	off	on	off	on	on
FRC Oscillator (f_{FRC}=6.36MHz)	on	on	off	on	on
SRC Oscillator (f_{SRC}=125kHz)	off	off	on	off	off

4 Operational Procedures

After connecting supply voltage, the module is **NOT** in normal operating mode.
To get the module into normal operating mode (polling mode):

- Connect supply voltage (12V) and GND
- Pull the data line to GND for a short time (>5ms)

5 Certification

USA
This device complies with Part 15 of the FCC Rules. Operation is subject to the following two conditions: (1) this device may not cause harmful interference, and (2) this device must accept any interference received, including interference that may cause undesired operation.

Diese Unterlage ist unser Eigentum. Jede Vervielfältigung, Verwertung, Mitteilung bzw. Weitergabe an Dritte ohne unsere vorherige Zustimmung ist untersagt.
Zuwiderhandlungen verpflichten zu Schadenersatz. Alle Rechte für den Fall der Patenterteilung, Gebrauchs- bzw. Geschmacksmustereintragung vorbehalten.
This document is our property. Any duplication, exploitation, transmission to a third party without our prior agreement is not allowed. In case of contravention we claim damages.
All rights for patent application, use- or design samples reserved.