Load Films into Film Cartridge

1. Press the Front Cover Button.

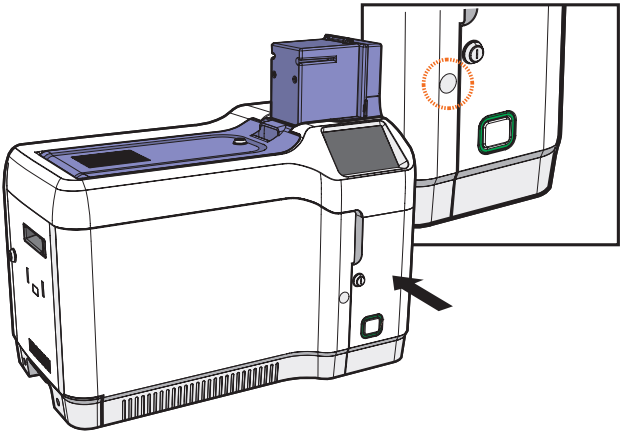

2. Once the cover opens slightly pull the cover by the handle to open it completely.

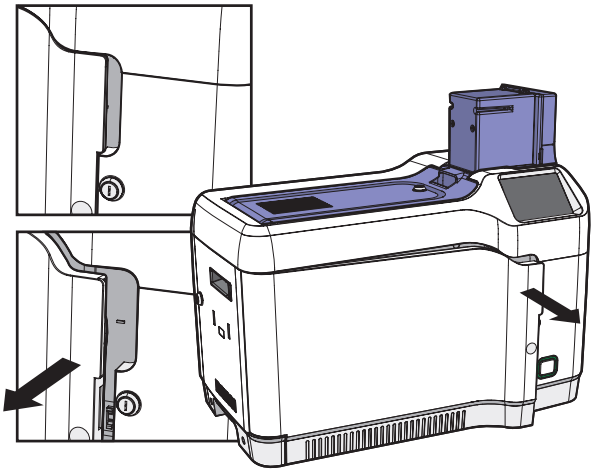

3. Pull the cartridge out while pressing the Cartridge Load/Eject Button to remove it from the Retransfer.

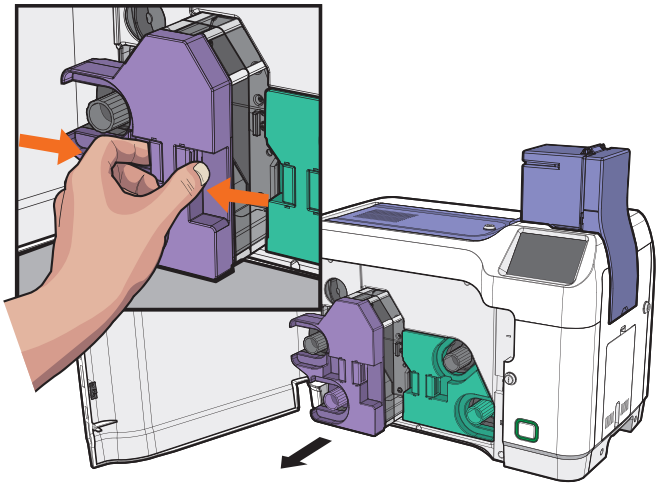

4. Load the film core by pushing it vertically from top to bottom as shown.

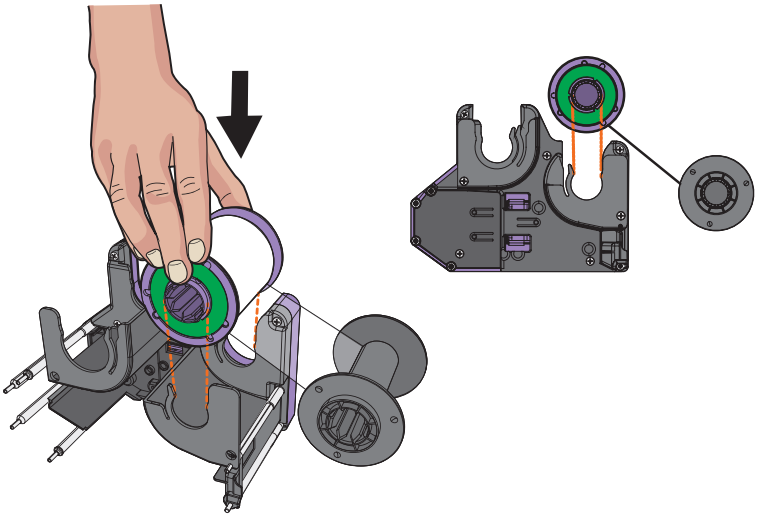

 ©2020 TIT ENG Co., Ltd. All rights reserved

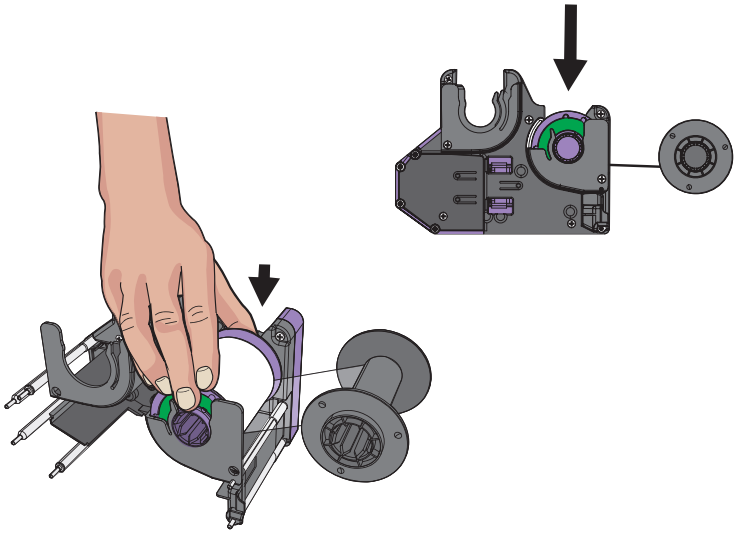

5. After standing up the film cartridge as below the image, turn the black film core clockwise and pass it under the cartridge.

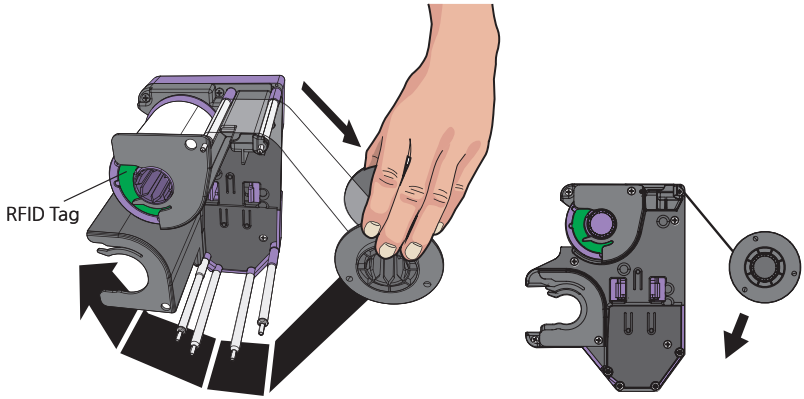

6. Lay the cartridge again, then load the black film core by pushing it vertically from top to bottom as shown in the image below.

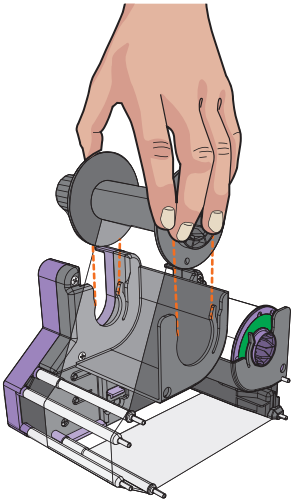

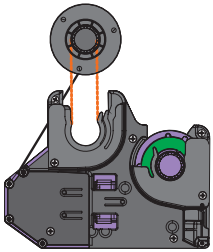

7. Turn the edge of the film core clockwise to tighten the film as shown in the image below.

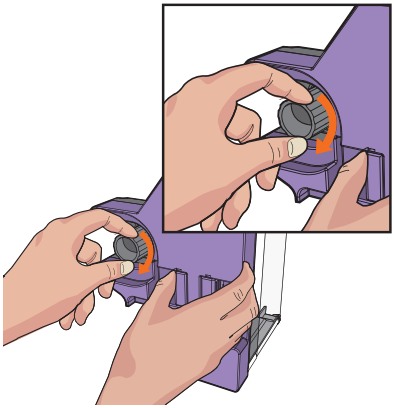

Caution

-If the film is loose before inserting the cartridge into the body, it will be caught in the cartridge slot and cannot be installed.

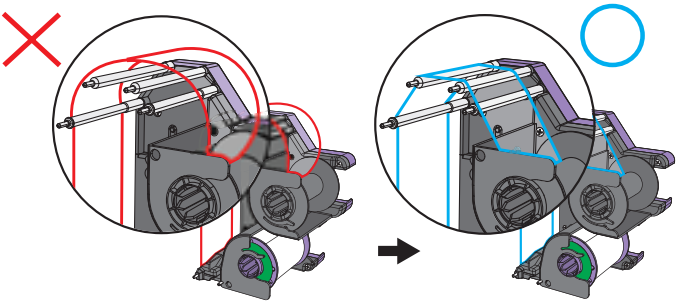

 ©2020 TIT ENG Co., Ltd. All rights reserved

8. Check the position of the Film Cartridge and push the cartridge in until it clicks.

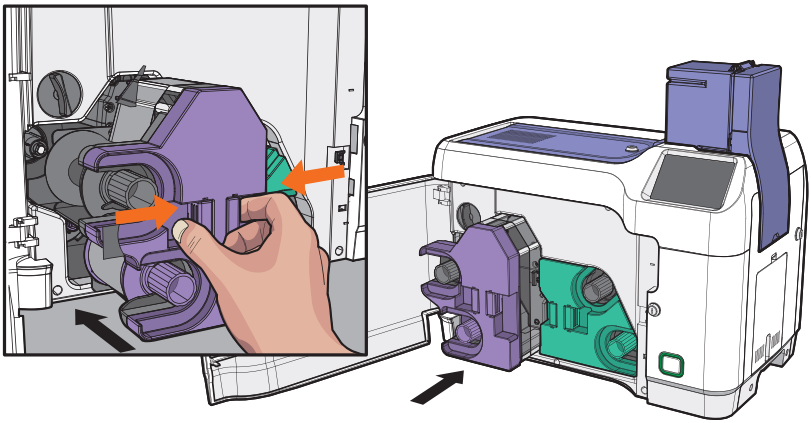

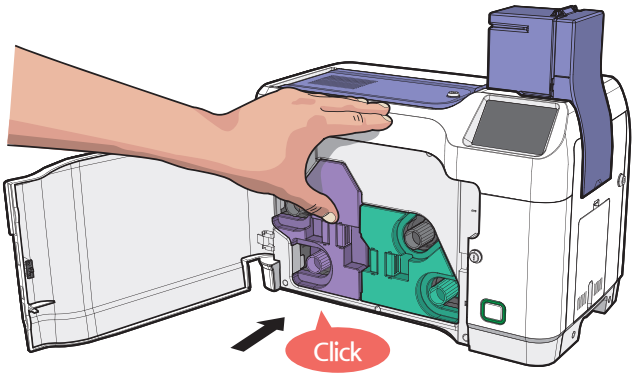

Load Ribbon into Ribbon Cartridge

1. Pull the cartridge out while pressing the Cartridge Load/Eject Button to remove it from the Retransfer as shown in the image below.

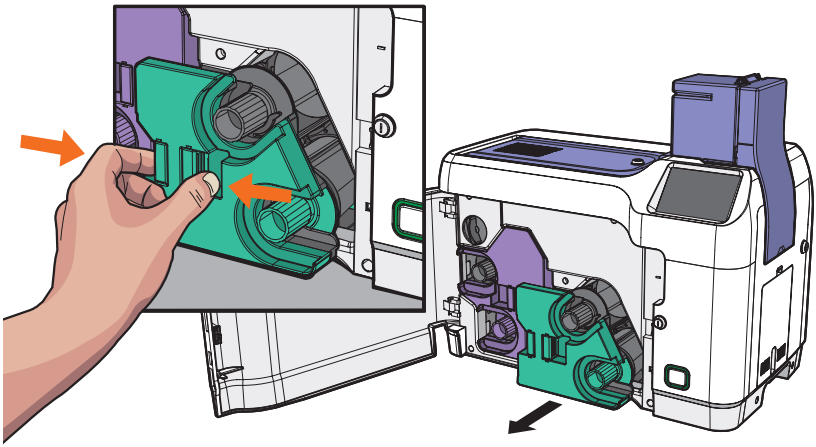

2. Load the ribbon core by pushing it vertically from top to bottom as shown in the image below.

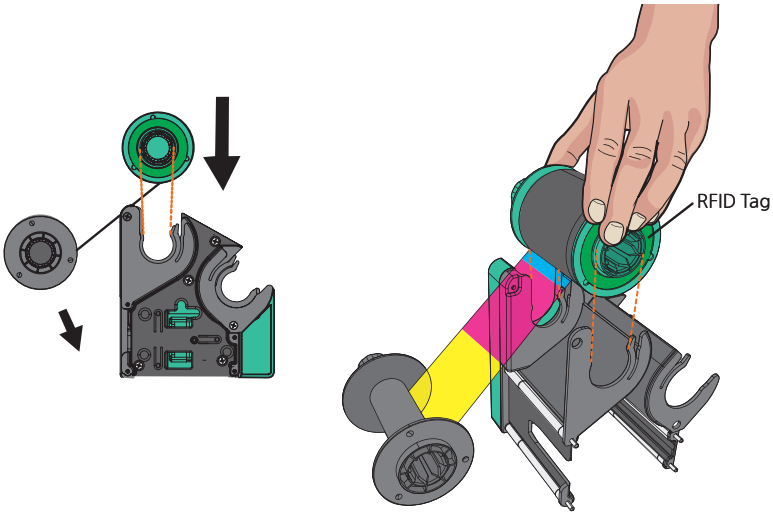

 ©2020 TIT ENG Co., Ltd. All rights reserved

3. Put on the ribbon cartridge as below image, and then turn the recovery ribbon core counterclockwise and pass it under the cartridge.

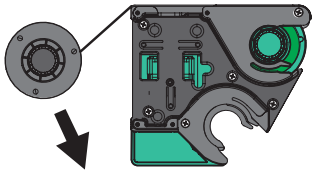

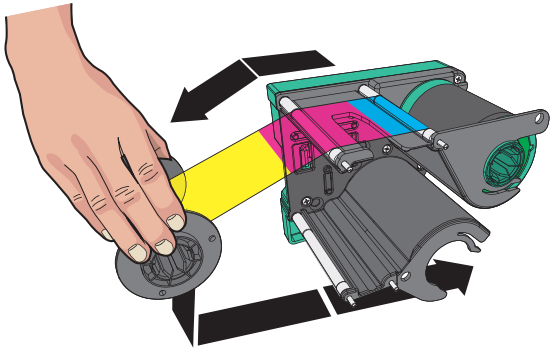

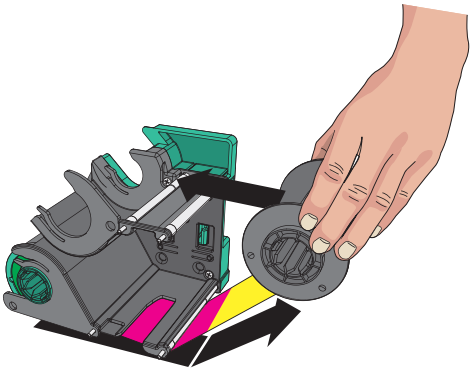

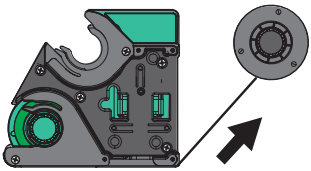

4. Lay the cartridge again as image below, and then insert the recovery ribbon core by pushing it in the direction of 45 degrees.

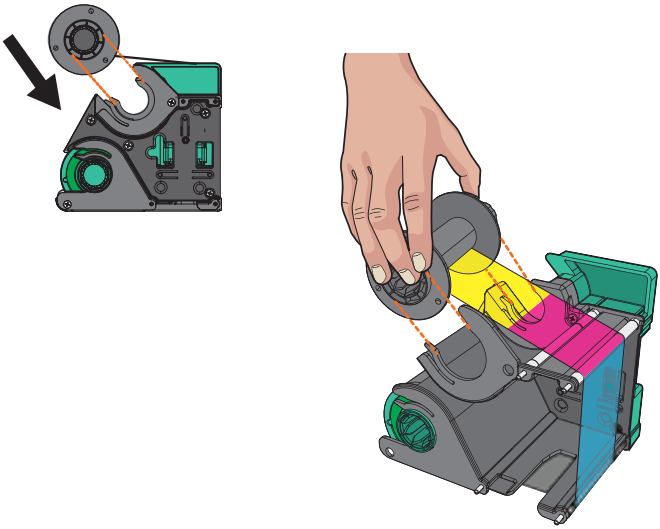

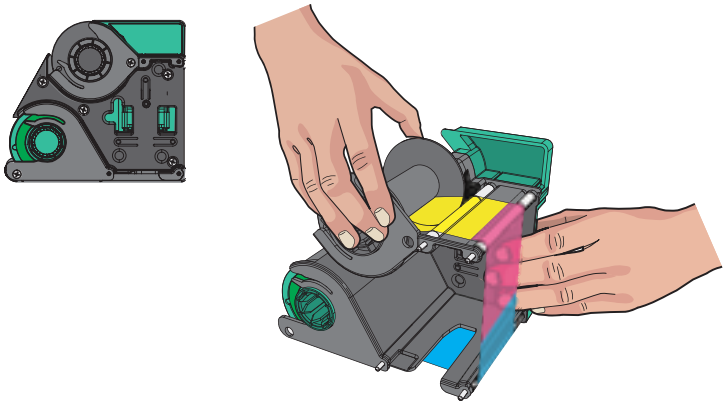

 ©2020 TIT ENG Co., Ltd. All rights reserved

5. Turn the cartridge handle counterclockwise as image below to tighten the ribbon.

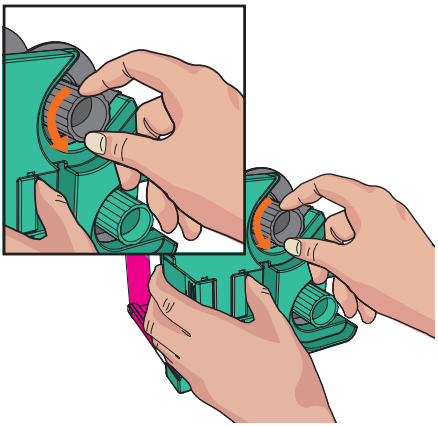

Caution

- If the ribbon is stretched before inserting the cartridge into the printer, it might be jammed in the cartridge slot and cannot be installed.

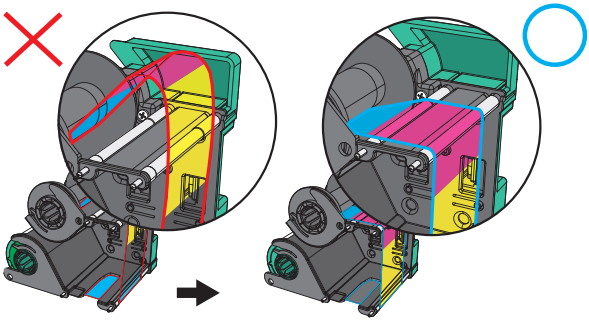

6. Check the position of the ribbon cartridge as image below and push in the cartridge in the direction of the arrow until it clicks.

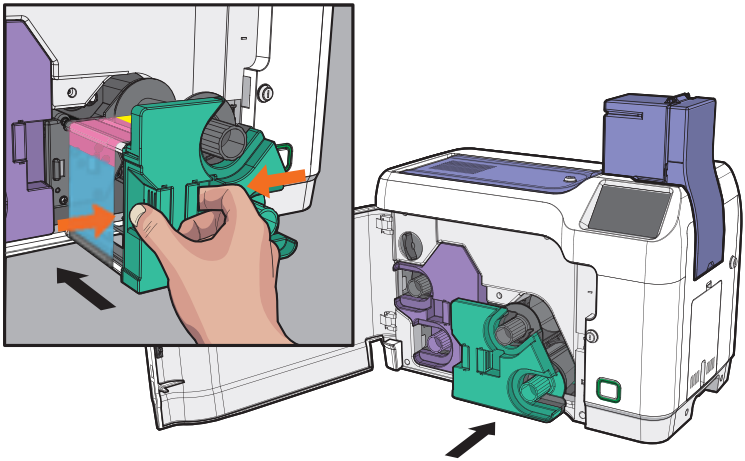

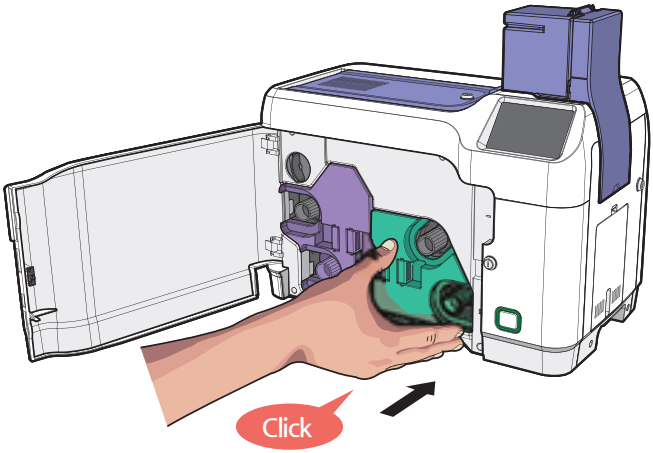

Close the front cover

1. Close the front cover by pushing it forward until it '**clicks**'.

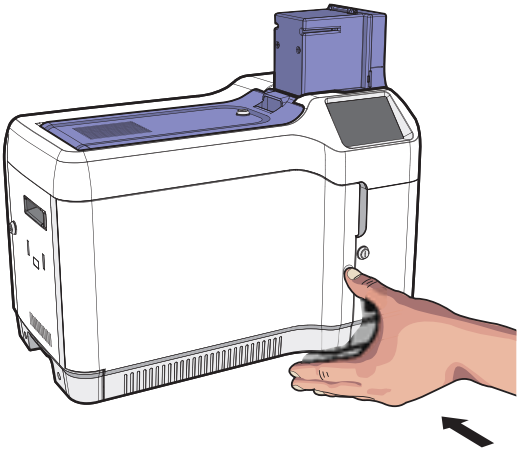

Caution

- Do not use force to close the front cover without properly installing the cartridge. It may cause damage to the product
-If the front cover of the printer is not closed properly, it may cause poor printing quality. (Check the closed state)

 ©2020 TIT ENG Co., Ltd. All rights reserved

How to attach and detach the Stacker

-Attaching the stacker to the printer

Insert the 'ㄱ' hook of the stacker into the groove on the product, and then lower it to install.
(Up to 150 cards can be stacked.)

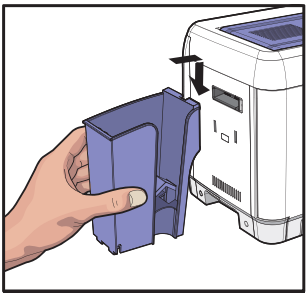

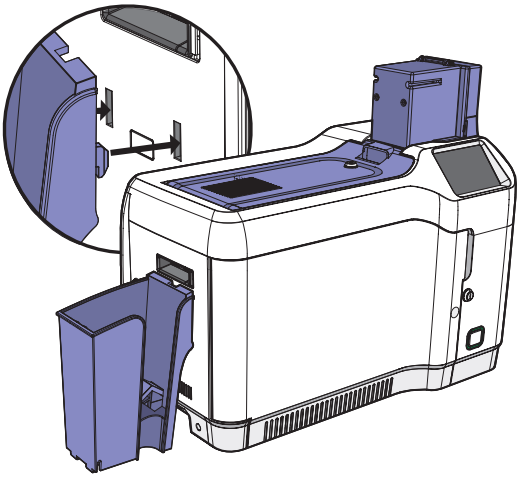

Connecting power and communication cable

Connect the power and USB communication cable to the backside of the printer as below image.

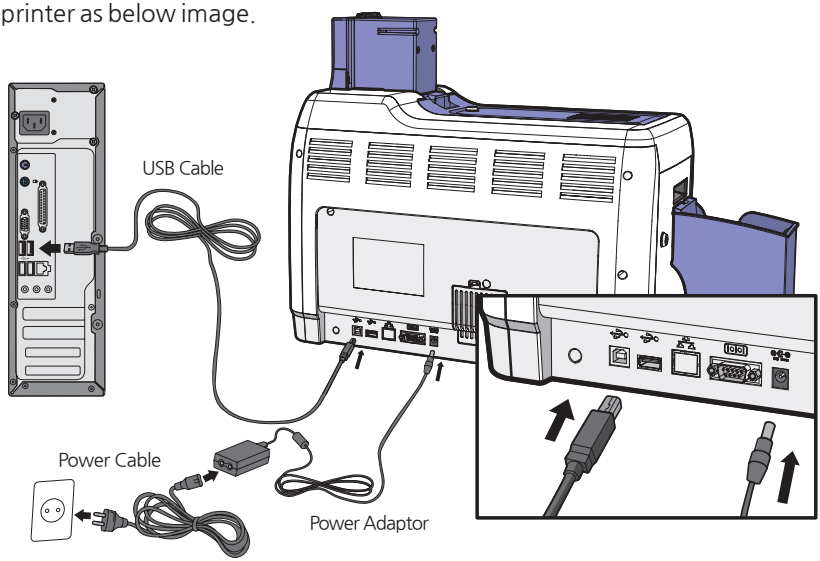

Supply power to the printer

Turn on the printer by pressing the power switch.

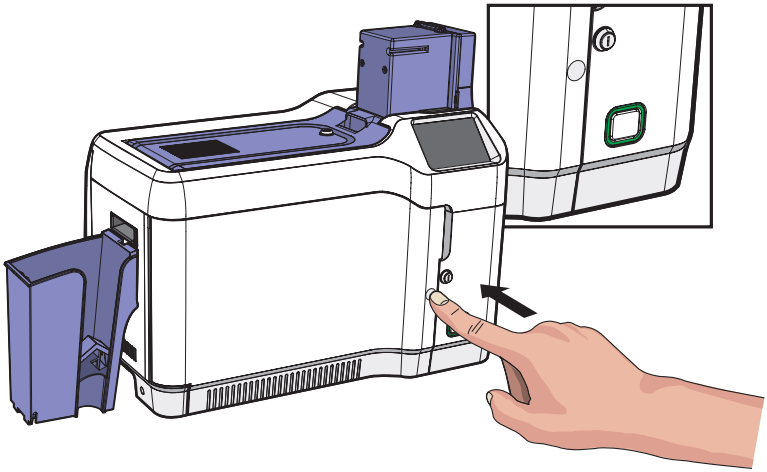

Setting after installing the Film/Ribbon

When the initial screen is displayed after booting, proceed to film and ribbon setting.

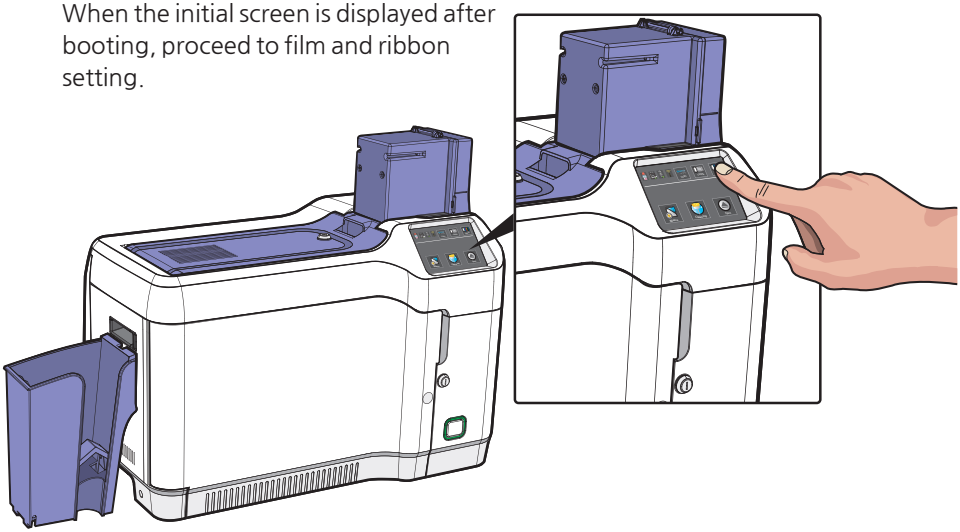

 ©2020 TIT ENG Co., Ltd. All rights reserved

-Position the Film and Ribbon

Function : When the film and ribbon are newly loaded, press the Sync button to adjust the position

1.

Press the button to enter the film setting menu.

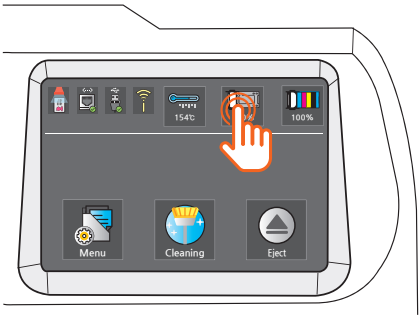

2. After checking the basic information on the film

press the button to adjust the position of the film Once the printer has positioned the film

Press the button to move to the standby screen.

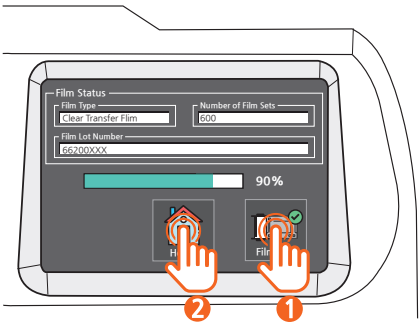

3.

Press the button to enter the ribbon settings menu.

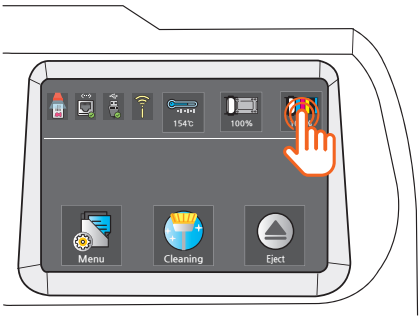

4. After checking the basic

information on the film, press the button to adjust the position of the ribbon

When the printer is in position of the ribbon, press the button to move to the standby screen

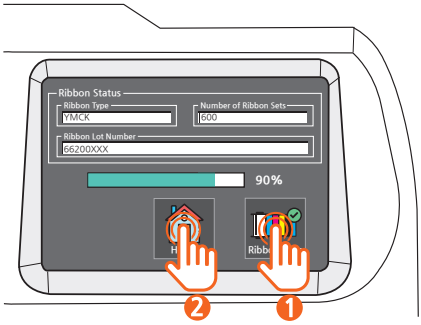

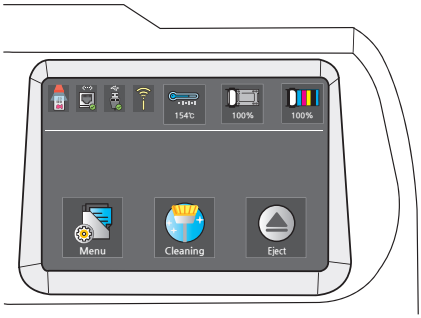

 ©2020 TIT ENG Co., Ltd. All rights reserved

Collect cards

-How to remove a card with the stacker detached

1. Hold the side of the stacker and pull it in the direction of the 'ㄱ' as below image to detach the stacker.

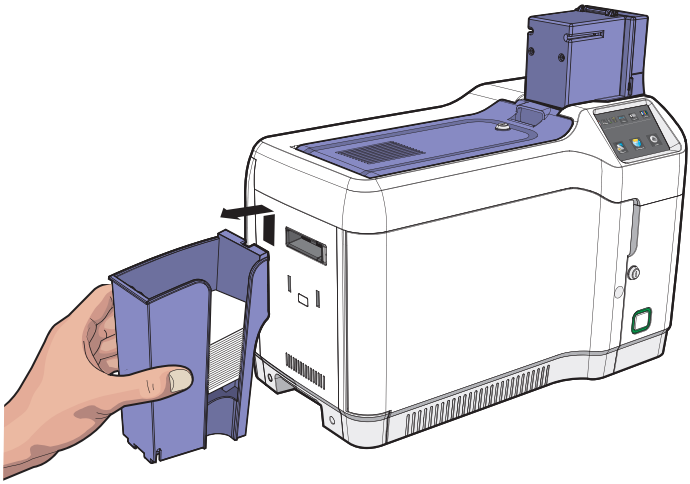
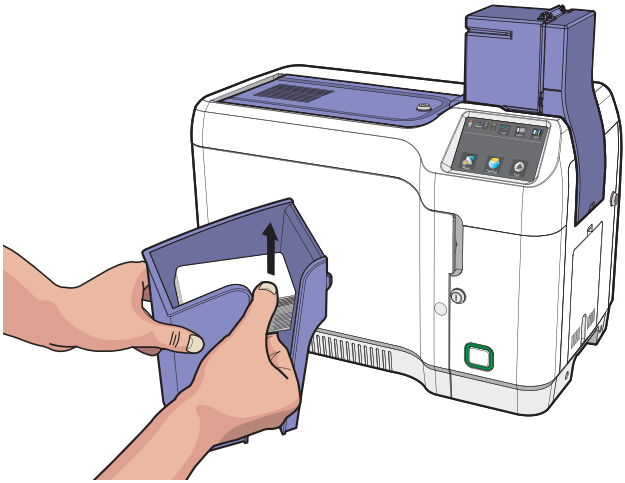
2. Hold the side of the stacker and lift the card as image below to remove it.