TRENDnet®

Powerline 500 AV Wireless Access Point

TPL-410AP

- Quick Installation Guide (1)

TPL-410AP (V1) / 12.17.2013

Before You Start

Package Contents

- TPL-410AP
- CD-ROM (Utility and User's Guide)
- Multi-Language Quick Installation Guide
- Network cable (1.8 m / 6 ft.)

Installation Requirements

- Existing network with internet access
- Additional HomePlug® AV or IEEE 1901 compliant powerline adapter
- Two powerline adapters are required to create a powerline network

2. Connect Powerline Adapters

Important Note:

- TRENDnet powerline adapters connect automatically out of the box. No additional Powerline installation steps are necessary. To change the default Powerline encryption key (recommended) or connect the adapters to an existing network that is using a different encryption key, please follow the sync button procedure below.
- If you are connecting the adapters to a non-TRENDnet Powerline device, please refer to the manufacturer's documentation for the appropriate sync button procedure.
- It is recommended to plug the adapters into nearby outlets before installing the devices to the desired locations.

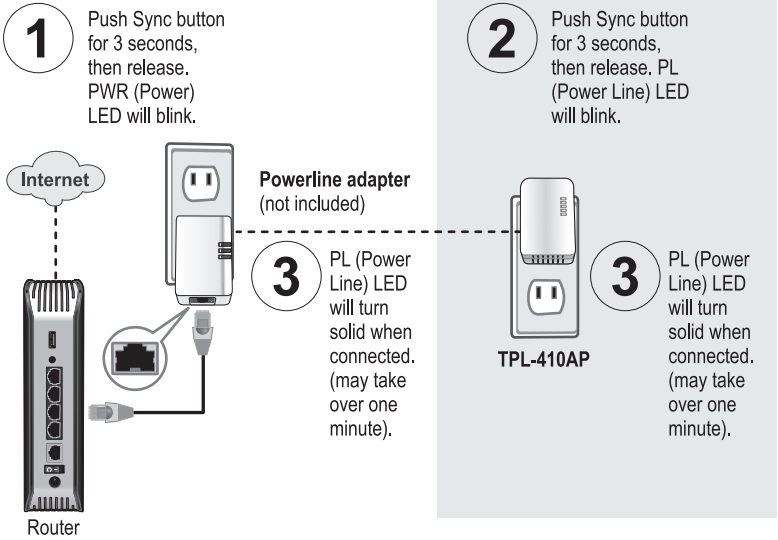

3. Connect Wirelessly to TPL-410AP

1. For added security the TPL-410AP's wireless network is pre-encrypted with its own unique network security key. You also find the unique security key and the pre-assigned network name (SSID) on the device label on the access point. To change the network security key, refer to the product manual. If the access point is reset to factory defaults, the wireless encryption will reset to the network security key printed on the product label on the access point.

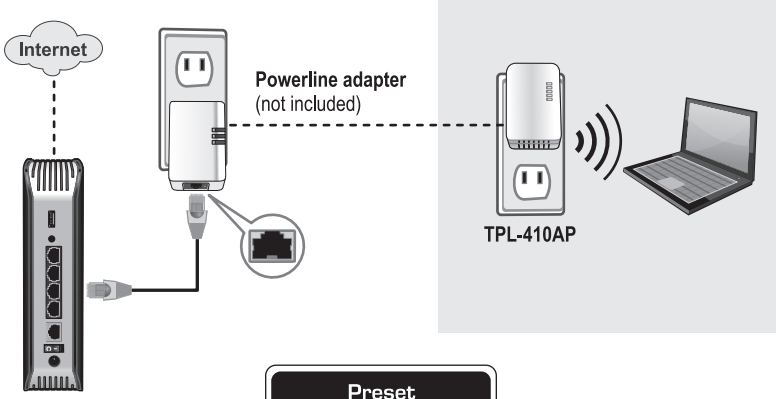

Preset Wireless Settings

Wi-Fi Name/SSID
XXXXXXXXXXXX

Wi-Fi Key
XXXXXXXXXXXX

Management Login

http://192.168.10.100

username: admin
password: admin

2. For detailed information regarding the TPL-410AP configuration and advanced settings, please refer to the User's Guide CD-ROM.

Declaration of Conformity

TRENDnet

Company Information:

Company Name:
TRENDnet, Inc.

Company Address:
20675 Manhattan Place
Torrance, CA 90501
USA

Product Information:

Product Description:
Powerline 500 AV Wireless Access Point

Model Number:
TPL-410AP

Brand Name:
TRENDnet

Technical Standards:

EN 300 328 V1.7.1: 10-2006
EN 301 489-1 V1.9.2: 09-2011
EN 301 489-17 V2.2.1: 09-2012
EN 55022: 2010/AC: 2011 Class B
EN 55024: 2010
EN 61000-3-2: 2006/A2: 2009
EN 61000-3-3: 2008
CISPR/IXX/CDV Opt B
EN 50412-2-1: 2005/AC: 2009
EN 62311: 2008
EN 50385: 2002
EN 60950-1: 2006 + A11 : 2009 + A1 : 2010 + A12: 2011
Regulation (EC) No. 1275/2008

Declaration:

This product is herewith confirmed to comply with the Directive of 1999/5/EC, 2004/108/EC, 2006/95/EC, and 2009/125/EC.

I hereby declare that the products and devices mentioned above are consistent with the standards and provisions of the guidelines.

Sonny Su	Director of Technology
Name	Title
November 11, 2013	
Date	Signature

GPL/LGPL General Information

This TRENDnet product includes free software written by third party developers. These codes are subject to the GNU General Public License ("GPL") or GNU Lesser General Public License ("LGPL"). These codes are distributed WITHOUT WARRANTY and are subject to the copyrights of the developers. TRENDnet does not provide technical support for these codes. The details of the GNU GPL and LGPL are included in the product CD-ROM.

Please also go to (http://www.gnu.org/licenses/gpl.txt) or (http://www.gnu.org/licenses/lgpl.txt) for specific terms of each license.

The source codes are available for download from TRENDnet's web site (http://trendnet.com/downloads/list_gpl.asp) for at least three years from the product shipping date.

You could also request the source codes by contacting TRENDnet.
20675 Manhattan Place, Torrance, CA 90501, USA. Tel: +1-310-961-5500 Fax: +1-310-961-5511

Informations générales GPL/LGPL

Ce produit TRENDnet comprend un logiciel libre écrit par des programmeurs tiers. Ces codes sont sujet à la GNU General Public License ("GPL" Licence publique générale GNU) ou à la GNU Lesser General Public License ("LGPL" Licence publique générale limitée GNU). Ces codes sont distribués SANS GARANTIE et sont sujets aux droits d'auteurs des programmeurs. TRENDnet ne fournit pas d'assistance technique pour ces codes. Les détails concernant les GPL et LGPL GNU sont repris sur le CD-ROM du produit.

Veuillez également vous rendre en (http://www.gnu.org/licenses/gpl.txt) ou en (http://www.gnu.org/licenses/lgpl.txt) pour les conditions spécifiques de chaque licence.

Les codes source sont disponibles au téléchargement sur le site Internet de TRENDnet web site (http://trendnet.com/downloads/list_gpl.asp) durant au moins 3 ans à partir de la date d'expédition du produit.

Vous pouvez également demander les codes source en contactant TRENDnet.
20675 Manhattan Place, Torrance, CA 90501, USA. Tel: +1-310-961-5500 Fax: +1-310-961-5511

Allgemeine Informationen zu GPL/LGPL

Dieses Produkt enthält die freie Software "netfilter/iptables" (© 2000-2004 netfilter project http://www.netfilter.org) und die freie Software „Linux „mtd“ (Memory Technology Devices) Implementation (© 2000 David Woodhouse), erstmals integriert in Linux Version 2.4.0-test 3 v. 10.07.2000 (http://www.kernel.org/pub/linux/kernel/v2.4/old-test-kernels/linux-2.4.0-test3.tar.bz2), sowie weitere freie Software. Sie haben durch den Erwerb dieses Produktes keinerlei Gewährleistungsansprüche gegen die Berechtigten an der oben genannten Software erworben; weil diese die Software kostenfrei lizenzieren gewähren sie keine Haftung gemäß unten abgedruckten Lizenzbedingungen. Die Software darf von jedermann im Quell-und Objektcode unter Beachtung der Lizenzbedingungen der GNU General Public License Version 2, und GNU Lesser General Public License (LGPL) vervielfältigt, verbreitet und verarbeitet werden.

Die Lizenz ist unten im englischsprachigen Originalwortlaut wiedergegeben. Eine nichtoffizielle Übersetzung in die deutsche Sprache finden Sie im Internet unter (http://www.gnu.de/documents/gpl-2.0.de.html). Eine allgemeine öffentliche GNU Lizenz befindet sich auch auf der mitgelieferten CD-ROM.

Sie können Quell-und Objektcode der Software für mindestens drei Jahre auf unserer Homepage www.trendnet.com im Downloadbereich (http://trendnet.com/langen/downloads/list_gpl.asp) downloadend. Sofern Sie nicht über die Möglichkeit des Downloads verfügen können Sie bei TRENDnet.

20675 Manhattan Place, Torrance, CA 90501 -U.S.A -, Tel.: +1-310-961-5500, Fax: +1-310-961-5511 die Software anfordern.

Información general sobre la GPL/LGPL

Este producto de TRENDnet incluye un programa gratuito desarrollado por terceros. Estos códigos están sujetos a la Licencia pública general de GNU (“GPL”) o la Licencia pública general limitada de GNU (“LGPL”). Estos códigos son distribuidos SIN GARANTÍA y están sujetos a las leyes de propiedad intelectual de sus desarrolladores. TRENDnet no ofrece servicio técnico para estos códigos. Los detalles sobre las licencias GPL y LGPL de GNU se incluyen en el CD-ROM del producto.

Consulte también el (http://www.gnu.org/licenses/gpl.txt) ó el (http://www.gnu.org/licenses/lgpl.txt) para ver las cláusulas específicas de cada licencia.

Los códigos fuentes están disponibles para ser descargados del sitio Web de TRENDnet (http://trendnet.com/downloads/list_gpl.asp) durante por lo menos tres años a partir de la fecha de envío del producto.

También puede solicitar el código fuente llamando a TRENDnet.
20675 Manhattan Place, Torrance, CA 90501, USA. Tel: +1-310-961-5500 Fax: +1-310-961-5511

Общая информация о лицензиях GPL/LGPL

В состав данного продукта TRENDnet входит бесплатное программное обеспечение, написанное сторонними разработчиками. Это ПО распространяется на условиях лицензий GNU General Public License ("GPL") или GNU Lesser General Public License ("LGPL"). Программы распространяются БЕЗ ГАРАНТИИ и охраняются авторскими правами разработчиков. TRENDnet не оказывает техническую поддержку этого программного обеспечения. Подробное описание лицензий GNU GPL и LGPL можно найти на компакт-диске, прилагаемом к продукту.

В пунктах (http://www.gnu.org/licenses/gpl.txt) и (http://www.gnu.org/licenses/lgpl.txt) изложены конкретные условия каждой из лицензий.

Исходный код программ доступен для загрузки с веб-сайта TRENDnet (http://trendnet.com/downloads/list_gpl.asp) в течение, как минимум, трех лет со дня поставки продукта.

Кроме того, исходный код можно запросить по адресу TRENDnet.
20675 Manhattan Place, Torrance, CA 90501, USA. Tel: +1-310-961-5500 Fax: +1-310-961-5511

GPL/LGPL informações Gerais

Este produto TRENDnet inclui software gratuito desenvolvido por terceiros. Estes códigos estão sujeitos ao GPL (GNU General Public License) ou ao LGPL (GNU Lesser General Public License). Estes códigos são distribuídos SEM GARANTIA e estão sujeitos aos direitos autorais dos desenvolvedores. TRENDnet não presta suporte técnico a estes códigos. Os detalhes do GNU GPL e do LGPL estão no CD-ROM do produto. Favor acessar http://www.gnu.org/licenses/gpl.txt ou http://www.gnu.org/licenses/lgpl.txt para os termos específicos de cada licença.

Os códigos fonte estão disponíveis para download no site da TRENDnet (http://trendnet.com/langen/downloads/list_gpl.asp) por pelo menos três anos da data de embarque do produto.

Você também pode solicitar os códigos fonte contactando TRENDnet, 20675 Manhattan Place, Torrance, CA 90501, USA.Tel: +1-310-961-5500, Fax: +1-310-961-5511.

GPL/LGPL üldinformatsioon

See TRENDneti toode sisaldab vaba tarkvara, mis on kirjutatud kolmanda osapoole poolt. Koodid on allutatud GNU (General Public License) Üldise Avaliku Litsentsi (GPL) või GNU (Lesser General Public License) ("LGPL") Vähem Üldine Avalik Litsentsiga. Koode vahendatakse ILMA GARANTIITA ja need on allutatud arendajate poolt. TRENDnet ei anna koodidele tehnilist tuge. Detailsemat infot GNU GPL ja LGPL kohta leiate toote CD-ROMil. Infot mõlema litsentsi spetsiifiliste terminite kohta leiate (http://www.gnu.org/licenses/gpl.txt) või (http://www.gnu.org/licenses/lgpl.txt).

Infot mõlema litsentsi spetsiifiliste terminite kohta leiate (http://www.gnu.org/licenses/gpl.txt) või (http://www.gnu.org/licenses/lgpl.txt). Lähtekoodi on võimalik alla laadida TRENDneti kodulehelt (http://trendnet.com/langen/downloads/list_gpl.asp) kolme aasta jooksul alates toote kättesaamise kuupäevast.

Samuti võite lähtekoodi paluda TRENDneti'lt, 20675 Manhattan Place, Torrance, CA 90501, USA. Tel: +1-310-961-5500, Fax: +1-310-961-5511.

Limited Warranty

TRENDnet warrants its products against defects in material and workmanship, under normal use and service, for the following length of time from the date of purchase. Warranty: 3 year limited warranty (When Applicable: 1 year warranty for power adapter, power supply, and cooling fan components.) Visit TRENDnet.com to review the full warranty policy, rights, and restrictions for this product.

Garantie Limitée

TRENDnet garantit ses produits contre les défauts matériels et de fabrication, dans des conditions normales d'utilisation et de service, pour les durées suivantes, à compter de la date de leur achat. Limitée: 3 ans de garantie limitée (Si applicable: 1 an de garantie sur l'adaptateur secteur, l'alimentation en énergie et les composants du ventilateur de refroidissement.) Visitez TRENDnet.com pour lire la politique complète de garantie, les droits et les restrictions s'appliquant à ce produit.

Begrenzte Garantie

TRENDnet garantiert, dass seine Produkte bei normaler Benutzung und Wartung während der nachfolgend genannten Zeit ab dem Kaufdatum keine Material- und Verarbeitungsschäden aufweisen. Garantie: 3-Jahres-Garantie (Soweit zutreffend: 1 Jahr Garantie für Netzteil, Stromkabel und Ventilator.) Alle Garantiebedingungen, Rechte und Einschränkungen für dieses Produkt finden Sie auf TRENDnet.com.

Garantía Limitada

TRENDnet garantiza sus productos contra defectos en los materiales y mano de obra, bajo uso y servicio normales, durante el siguiente periodo de tiempo a partir de la fecha de compra. Garantía: 3 años (Cuando proceda: 1 año de garantía para componentes de adaptadores de corriente, fuente de alimentación y ventiladores de refrigeración.) Visite TRENDnet.com para revisar la política de garantía, derechos y restricciones para este producto.

Ограниченная гарантия

Гарантия компании TRENDnet распространяется на дефекты, возникшие по вине производителя, при соблюдении условий эксплуатации и обслуживания в течение установленного периода с момента приобретения. (Продукт: Ограниченная гарантия: Трехлетняя ограниченная гарантия (Распространяется: На протяжении 1 года на силовые адаптеры, источники питания и компоненты вентилятора охлаждения) Полную версию гарантийных обязательств, а также права пользователя и ограничения при эксплуатации данного продукта смотрите на вебсайте TRENDnet.com.

Garantia Limitada

TRENDnet garante seus produtos contra defeitos em material e mão de obra, sob condições normais de uso e serviço, pelo seguinte tempo a partir da data da compra. Garantia: Garantia limitada de 3 anos. (Quando aplicável: 1 ano de garantia para adaptador de tensão, fonte e componentes de ventoinhas). Visite TRENDnet.com para conhecer a política de garantia completa, direitos e restrições para este produto.)

Piiratud garantii

TRENDneti tavatingimustes kasutatavatel ja hooldatavatel toodetel on järgmise ajavahemiku jooksul (alates ostukuupäevast) tootmis-ja materjalidefektide garantii. garantii: 3-aastane piiratud garantii. (Garantii kohaldatakse: toiteadapteri, toiteallika ja jahutusventilaatori osadel on 1-aastane garantii.) Täisgarantii põhimõtete, õiguste ja piirangute kohta leiate lisateavet saidilt TRENDnet.com.

Гарантія компанії

Гарантія компанії TRENDnet поширюється на дефекти, що виникли з вини виробника, при дотриманні умов експлуатації та обслуговування протягом встановленого періоду з моменту придбання. (Продукт: Обмежена гарантія: 3 роки обмеженої гарантії (Поширюється: Протягом 1 року на силові адаптери, джерела живлення і компоненти вентилятора охолодження) Повну версію гарантійних зобов'язань, а також права користувача та обмеження при експлуатації даного продукту дивіться на вебсайті TRENDnet.com.

Certifications

This device complies with Part 15 of the FCC Rules.
Operation is subject to the following two conditions:
(1) This device may not cause harmful interference.
(2) This device must accept any interference received.
Including interference that may cause undesired operation.

Waste electrical an electronic products must not be disposed of with household waste. Please recycle where facilities exist. Check with your Local Authority or Retailer for recycling advice.

Note

The Manufacturer is not responsible for any radio or TV interference caused by unauthorized modification to this equipment. Such changes or modification could void the user's authority to operate the equipment.

Advertencia

En todos nuestros equipos se mencionan claramente las caracteristicas del adaptador de alimentacón necesario para su funcionamiento. El uso de un adaptador distinto al mencionado puede producir daños fisicos y/o daños al equipo conectado. El adaptador de alimentación debe operar con voltaje y frecuencia de la energia electrica domiciliaria exitente en el pais o zona de instalación.

Federal Communication Commission Interference Statement

This equipment has been tested and found to comply with the limits for a Class B digital device, pursuant to Part 15 of the FCC Rules. These limits are designed to provide reasonable protection against harmful interference in a residential installation. This equipment generates, uses and can radiate radio frequency energy and, if not installed and used in accordance with the instructions, may cause harmful interference to radio communications. However, there is no guarantee that interference will not occur in a particular installation. If this equipment does cause harmful interference to radio or television reception, which can be determined by turning the equipment off and on, the user is encouraged to try to correct the interference by one of the following measures:

- Reorient or relocate the receiving antenna.
- Increase the separation between the equipment and receiver.
- Connect the equipment into an outlet on a circuit different from that to which the receiver is connected.
- Consult the dealer or an experienced radio/TV technician for help.

FCC Radiation Exposure Statement:

This equipment complies with FCC radiation exposure limits set forth for an uncontrolled environment. This equipment should be installed and operated with minimum distance 20cm between the radiator & your body.

Technical Support

If you have any questions regarding the product installation, please contact our Technical Support.
Toll free US/Canada: 1-866-845-3673
Regional phone numbers available
at www.trendnet.com/support

Product Warranty Registration

Please take a moment to register your product online. Go to TRENDnet's website at:
http://www.trendnet.com/register

TRENDnet
20675 Manhattan Place, Torrance, CA 90501. USA
Copyright © 2014. All Rights Reserved. TRENDnet.