Quick Start Guide

COPYRIGHT ©2015 Hangzhou Hikvision Digital Technology Co., Ltd.

ALL RIGHTS RESERVED.

Any and all information, including, among others, wordings, pictures, graphs are the properties of Hangzhou Hikvision Digital Technology Co., Ltd. or its subsidiaries (hereinafter referred to be "Hikvision"). This user manual (hereinafter referred to be "the Manual") cannot be reproduced, changed, translated, or distributed, partially or wholly, by any means, without the prior written permission of Hikvision. Unless otherwise stipulated, Hikvision does not make any warranties, guarantees or representations, express or implied, regarding to the Manual.

About this Manual

This Manual is applicable to 10xx/20xx Network Camera.

The Manual includes instructions for using and managing the product. Pictures, charts, images and all other information hereinafter are for description and explanation only. The information contained in the Manual is subject to change, without notice, due to firmware updates or other reasons. Please find the latest version in the company website (http://overseas.hikvision.com/en/).

Please use this user manual under the guidance of professionals.

Trademarks Acknowledgement

and other Hikvision's trademarks and logos are the properties of Hikvision in various jurisdictions. Other trademarks and logos mentioned below are the properties of their respective owners.

Legal Disclaimer

TO THE MAXIMUM EXTENT PERMITTED BY APPLICABLE LAW, THE PRODUCT DESCRIBED, WITH ITS HARDWARE, SOFTWARE AND FIRMWARE, IS PROVIDED “AS IS”, WITH ALL FAULTS AND ERRORS, AND HIKVISION MAKES NO WARRANTIES, EXPRESS OR IMPLIED, INCLUDING WITHOUT LIMITATION, MERCHANTABILITY, SATISFACTORY QUALITY, FITNESS FOR A PARTICULAR PURPOSE, AND NON-INFRINGEMENT OF THIRD PARTY. IN NO EVENT WILL HIKVISION, ITS DIRECTORS, OFFICERS, EMPLOYEES, OR AGENTS BE LIABLE TO YOU FOR ANY SPECIAL, CONSEQUENTIAL, INCIDENTAL, OR INDIRECT DAMAGES, INCLUDING, AMONG OTHERS, DAMAGES FOR LOSS OF BUSINESS PROFITS, BUSINESS INTERRUPTION, OR LOSS OF DATA OR DOCUMENTATION, IN CONNECTION WITH THE USE OF THIS PRODUCT, EVEN IF HIKVISION HAS BEEN ADVISED OF THE POSSIBILITY OF SUCH DAMAGES.

REGARDING TO THE PRODUCT WITH INTERNET ACCESS, THE USE OF PRODUCT SHALL BE WHOLLY AT YOUR OWN RISKS. HIKVISION SHALL NOT TAKE ANY RESPONSIBILITES FOR ABNORMAL OPERATION, PRIVACY LEAKAGE OR OTHER DAMAGES RESULTING FROM CYBER ATTACK, HACKER ATTACK, VIRUS INSPECTION, OR OTHER INTERNET SECURITY RISKS; HOWEVER, HIKVISION WILL PROVIDE TIMELY TECHNICAL SUPPORT IF REQUIRED.

SURVEILLANCE LAWS VARY BY JURISDICTION. PLEASE CHECK ALL RELEVANT LAWS IN YOUR JURISDICTION BEFORE USING THIS PRODUCT IN ORDER TO ENSURE THAT YOUR USE CONFORMS THE APPLICABLE LAW. HIKVISION SHALL NOT BE LIABLE IN THE EVENT THAT THIS PRODUCT IS USED WITH ILLEGITIMATE PURPOSES.

IN THE EVENT OF ANY CONFLICTS BETWEEN THIS MANUAL AND THE APPLICABLE LAW, THE LATER PREVAILS.

Regulatory Information

FCC Information

Note: This product has been tested and found to comply with the limits for a Class B digital device, pursuant to Part 15 of the FCC Rules. These limits are designed to provide reasonable protection against harmful interference in a residential installation. This product generates, uses, and can radiate radio frequency energy and, if not installed and used in accordance with the instructions, may cause harmful interference to radio communications. However, there is no guarantee that interference will not occur in a particular installation. If this product does cause harmful interference to radio or television reception, which can be determined by turning the equipment off and on, the user is encouraged to try to correct the interference by one or more of the following measures:

—Reorient or relocate the receiving antenna.

—Increase the separation between the equipment and receiver.

—Connect the equipment into an outlet on a circuit different from that to which the receiver is connected.

—Consult the dealer or an experienced radio/TV technician for help.

This equipment should be installed and operated with a minimum distance 20cm between the radiator and your body

Please take attention that changes or modification not expressly approved by the party responsible for compliance could void the user’s authority to operate the equipment.

FCC Conditions

This device complies with part 15 of the FCC Rules. Operation is subject to the following two conditions:

1. This device may not cause harmful interference.

2. This device must accept any interference received, including interference that may cause undesired operation.

EU Conformity Statement

This product and - if applicable - the supplied accessories too are marked with "CE" and comply therefore with the applicable harmonized European standards listed under the EMC Directive 2004/108/EC, the RoHS Directive 2011/65/EU, and the R&TTE Directive 1999/5/EC.

2012/19/EU (WEEE directive): Products marked with this symbol cannot be disposed of as unsorted municipal waste in the European Union. For proper recycling, return this product to your local supplier upon the purchase of equivalent new equipment, or dispose of it at designated collection points. For more information see: www.recyclethis.info

2006/66/EC (battery directive): This product contains a battery that cannot be disposed of as unsorted municipal waste in the European Union. See the product documentation for specific battery information. The battery is marked with this symbol, which may include lettering to indicate cadmium (Cd), lead (Pb), or mercury (Hg). For proper recycling, return the battery to your supplier or to a designated collection point. For more information see: www.recyclethis.info

Industry Canada ICES-003 Compliance

This device meets the CAN ICES-3 (B)/NMB-3(B) standards requirements.

This device complies with Industry Canada licence-exempt RSS standard(s). Operation is subject to the following two conditions:

(1) this device may not cause interference, and

(2) this device must accept any interference, including interference that may cause undesired operation of the device.

Le présent appareil est conforme aux CNR d'Industrie Canada applicables aux appareils radioexempts de licence. L'exploitation est autorisée aux deux conditions suivantes :

(1) l'appareil ne doit pas produire de brouillage, et

(2) l'utilisateur de l'appareil doit accepter tout brouillage radioélectrique subi, même si le brouillage est susceptible d'en compromettre le fonctionnement.

Under Industry Canada regulations, this radio transmitter may only operate using an antenna of a type and maximum (or lesser) gain approved for the transmitter by Industry Canada. To reduce potential radio interference to other users, the antenna type and its gain should be so chosen that the equivalent isotropically radiated power (e.i.r.p.) is not more than that necessary for successful communication.

Conformément à la réglementation d'Industrie Canada, le présent émetteur radio peut fonctionner avec une antenne d'un type et d'un gain maximal (ou inférieur) approuvé pour l'émetteur par Industrie Canada. Dans le but de réduire les risques de brouillage radioélectrique à l'intention des autres utilisateurs, il faut choisir le type d'antenne et son gain de sorte que la puissance isotrope

rayonnée équivalente (p.i.r.e.) ne dépasse pas l'intensité nécessaire à l'établissement d'une communication satisfaisante.

Safety Instruction

These instructions are intended to ensure that user can use the product correctly to avoid danger or property loss.

The precaution measure is divided into “Warnings” and “Cautions”

Warnings: Serious injury or death may occur if any of the warnings are neglected.

Cautions: Injury or equipment damage may occur if any of the cautions are neglected.

Warnings Follow these safeguards to prevent serious injury or death.	**Cautions** Follow these precautions to prevent potential injury or material damage.

Warnings

- Proper configuration of all passwords and other security settings is the responsibility of the installer and/or end-user.
- In the use of the product, you must be in strict compliance with the electrical safety regulations of the nation and region. Please refer to technical specifications for detailed information.

- Input voltage should meet both the SELV (Safety Extra Low Voltage) and the Limited Power Source with 24 VAC or 12 VDC according to the IEC60950-1 standard. Please refer to technical specifications for detailed information.
- Do not connect several devices to one power adapter as adapter overload may cause over-heating or a fire hazard.
- Please make sure that the plug is firmly connected to the power socket. When the product is mounted on wall or ceiling, the device shall be firmly fixed.
- If smoke, odor or noise rise from the device, turn off the power at once and unplug the power cable, and then please contact the service center.

Cautions

- Make sure the power supply voltage is correct before using the camera.
- Do not drop the camera or subject it to physical shock.
- Do not touch sensor modules with fingers. If cleaning is necessary, use clean cloth with a bit of ethanol and wipe it gently. If the camera will not be used for an extended period, please replace the lens cap to protect the sensor from dirt.
- Do not aim the camera at the sun or extra bright places. Blooming or smearing may occur otherwise (which is not a malfunction), and affect the endurance of sensor at the same time.

- The sensor may be burned out by a laser beam, so when any laser equipment is in using, make sure that the surface of sensor will not be exposed to the laser beam.
- Do not place the camera in extremely hot, cold (the operating temperature shall be-30°C ~+60°C, or -40°C ~ +60°C if the camera model has an “H” in its suffix), dusty or damp locations, and do not expose it to high electromagnetic radiation.
- To avoid heat accumulation, good ventilation is required for operating environment.
- Keep the camera away from liquid while in use.
- While in delivery, the camera shall be packed in its original packing, or packing of the same texture.
- Regular part replacement: a few parts (e.g. electrolytic capacitor) of the equipment shall be replaced regularly according to their average enduring time. The average time varies because of differences between operating environment and using history, so regular checking is recommended for all the users. Please contact with your dealer for more details.
- Improper use or replacement of the battery may result in hazard of explosion. Replace with the same or equivalent type only. Dispose of used batteries according to the instructions provided by the battery manufacturer.
- If the product does not work properly, please contact your dealer or the nearest service center. Never attempt to disassemble the camera yourself. (We shall not assume any responsibility for problems caused by unauthorized repair or maintenance.)

Table of Contents

1 Appearance Description 11

1.1 Overview of Type I Bullet Camera 11

1.2 Overview of Type II Bullet Camera 12

1.2.1 Micro SD Card Slot & Reset/ WPS Button 13

1.2.2 PoE Power Supply Configuration (Optional)..... 17

2 Installation..... 18

2.1 Installation of the Bullet Camera 19

2.2 Installation of Water-proof Jacket 21

3 Setting the Network Camera over the LAN 23

3.1 Wiring 23

3.2 Activating the Camera 24

3.2.1 Activation via Web Browser..... 24

3.2.2 Activation via SADP Software 26

3.3 Modifying the IP Address 27

4 Accessing via Web Browser 29

1 Appearance Description

1.1 Overview of Type I Bullet Camera

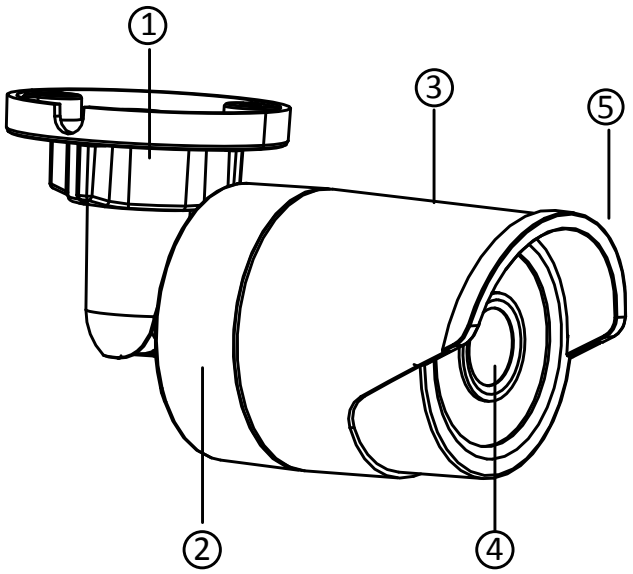

Figure 1-1 Type I Bullet Camera

Table 1-1 Description

No.	Description	No.	Description
1	Mounting Base	4	Lens
2	Back Box	5	Sun Shield
3	Front Box	6	

NOTE

Type I camera does not support the function of Wi-Fi and SD card.

1.2 **Overview of Type II Bullet Camera**

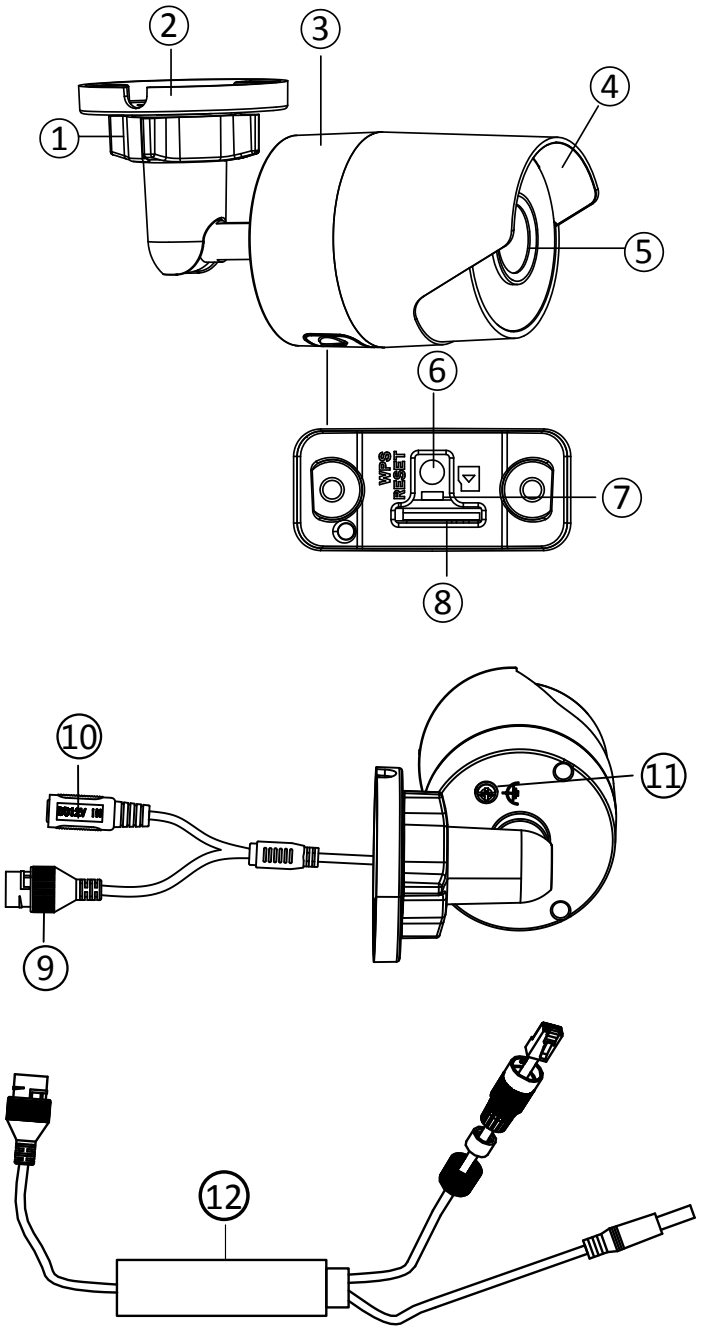

Figure 1-2 Type II Bullet Camera

Table 1-2 Description

No.	Description	No.	Description
1	Mounting Base	7	LED Indicator
2	Adjustment Nut	8	SD Card Slot
3	Main Body	9	10/100M Self-adaptive Ethernet Interface
4	Sun Shield	10	Power Cable
5	Lens	11	GND Screw
6	Reset/ WPS Button	12	PoE Power Cable (Optional)

1.2.1 Micro SD Card Slot & Reset/ WPS Button

Move the Micro SD / Reset/WPS Cover aside, and you can see the Reset button, WPS button and the micro SD card slot.

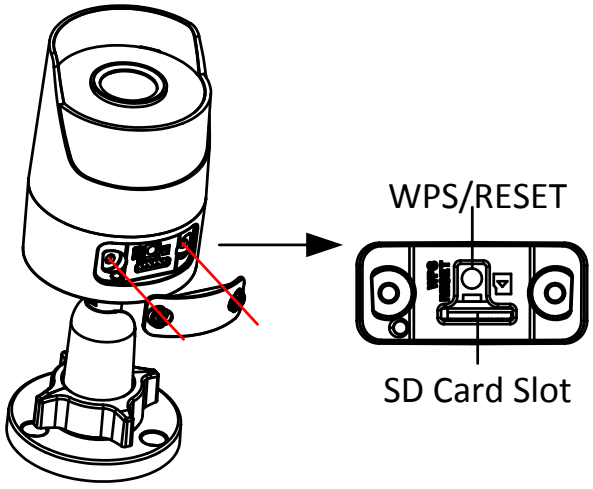

Figure 1-3 Move the Micro SD / Reset/WPS Cover

Installing the SD Card

Insert the micro SD card into the micro SD card slot.

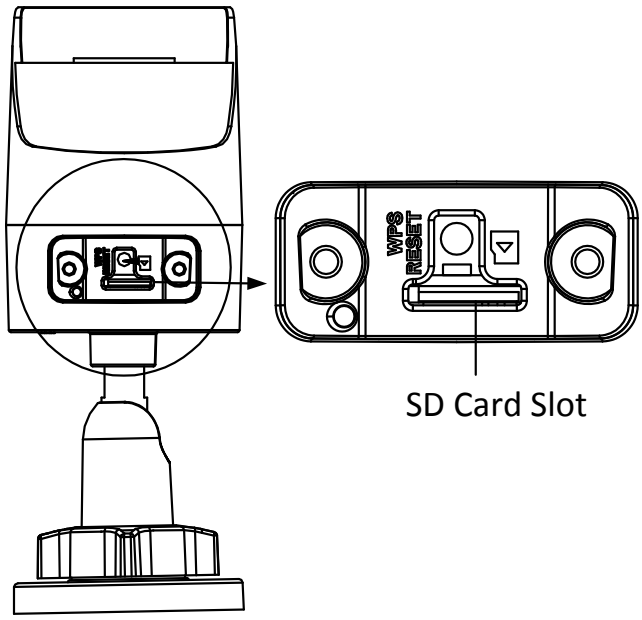

Figure 1-4 Install the SD Card

Resetting the Camera

Press WPS/RESET about 10s when the camera is power on or rebooting to restore the default settings, including the user name, password, IP address, port No., etc.

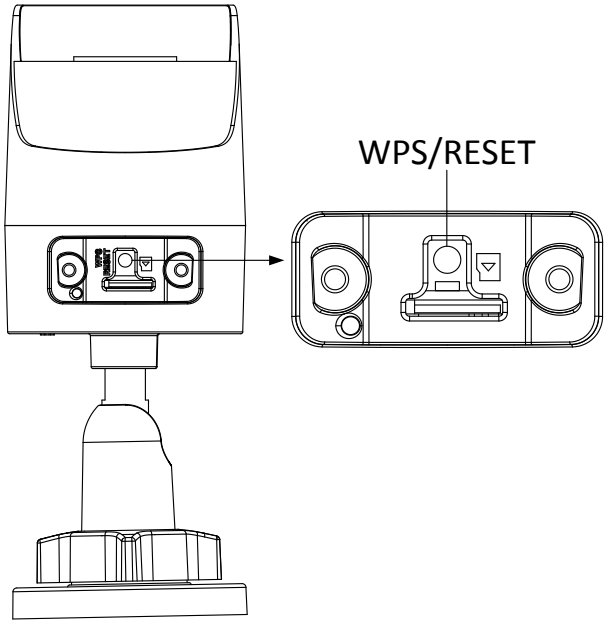

Figure 1-5 WPS/Reset Button

Setting the WPS Protocol

A wireless router with the WPS function is required to enable the WPS function of the camera. Refer the steps below.

Steps:

1. Press the WPS button on the router.
2. Press the WPS button (about 2s) on the camera within 120s you enable the WPS of the router to join in the wireless network.

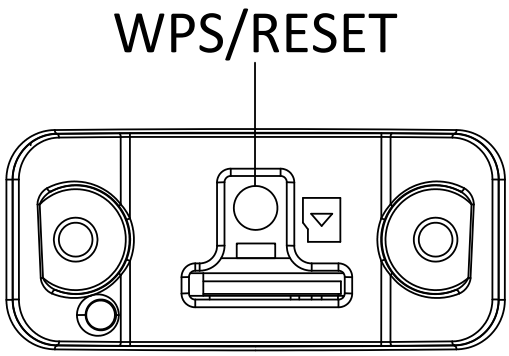

Figure 1-6 WPS/Reset Button

NOTE

- The WPS button works as a reset button only when you press it when the camera is powering on.
- Press the WPS button on the camera, and then press the WPS button on the router will work as well, and the expire time of WPS connection on the camera is 120s.
- The link indicator blinks if the wireless connection succeeded.

NOTE

Screw the Micro SD / Reset/WPS Cover back to the camera after all settings.

1.2.2 **PoE Power Supply Configuration (Optional)**

This type of bullet camera support PoE power supply. The connection of PoE power cables is shown as follows. Connect the single-cable end to the PoE router. Connect the power and Ethernet cables on the other end to the corresponding cables of the camera.

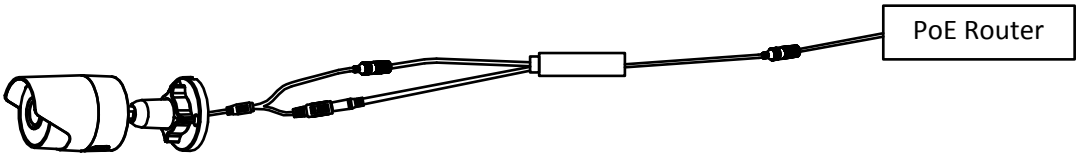

Figure 1-7 PoE Power Cable Connection

2 Installation

Before you start:

- Make sure the device in the package is in good condition and all the assembly parts are included.
- The standard power supply is 12V DC or 24V AC, please make sure your power supply matches with your camera.
- Make sure all the related equipment is power-off during the installation.
- Check the specification of the products for the installation environment.
- Make sure that the wall is strong enough to withstand four times the weight of the camera and the bracket.

For the camera that supports IR, you are required to pay attention to the following precautions to prevent IR reflection:

- Dust or grease on the dome cover will cause IR reflection. Please do not remove the dome cover film until the installation is finished. If there is dust or grease on the dome cover, clean the dome cover with clean soft cloth and isopropyl alcohol.
- Make sure that there is no reflective surface too close to the camera lens. The IR light from the camera may reflect back into the lens causing reflection.
- The foam ring around the lens must be seated flush against the inner surface of the bubble to isolate the lens from the IR LEDS. Fasten the dome cover to camera body so that the foam ring and the dome cover are attached seamlessly.

2.1 **Installation of the Bullet Camera**

NOTE

Both wall mounting and ceiling mounting are suitable for the IR bullet camera. Wall mounting will be taken as an example in this section. You can take steps of wall mounting as a reference if ceiling mounting is adopted.

Steps:

1. Drill the screw holes in the wall according to the drill template.

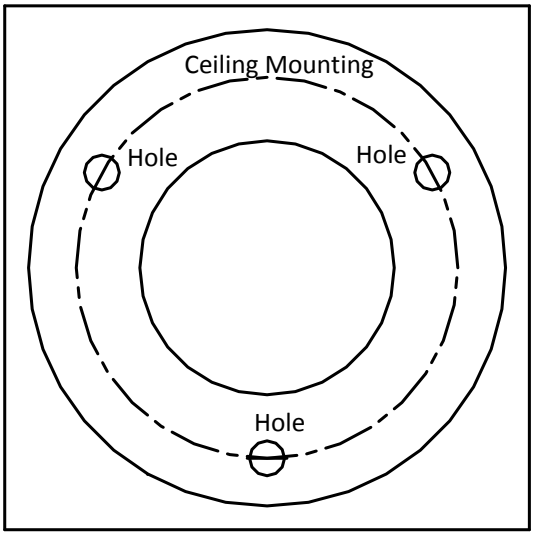

Figure 2-1 Drill Template

2. Route the corresponding cables.
3. Secure the camera to the wall with the supplied Screws.

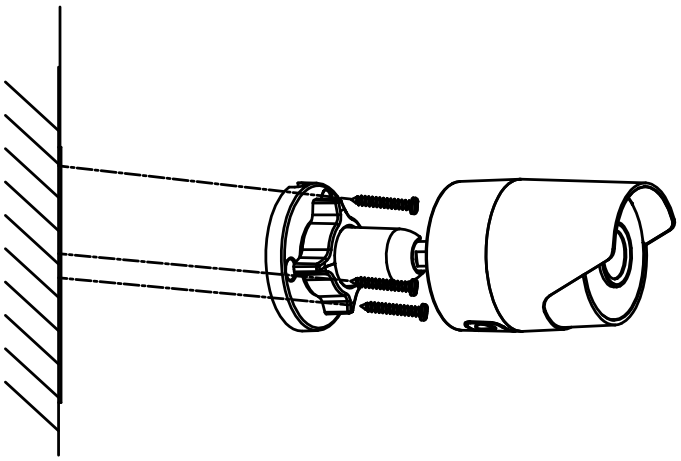

Figure 2-2 Secure the Camera to the Ceiling

4. Connect the corresponding power/ Video Output cables.
5. Adjust the Lens.
   1). Loosen the adjustable nut.
   2). Adjust the pan direction [0°~360°].
   3). Adjust the tilt direction [0°~90°].
   4). Rotate the camera [0~360°] to adjust the lens to the surveillance angle.
   5). Tighten the adjustable nut to complete the installation.

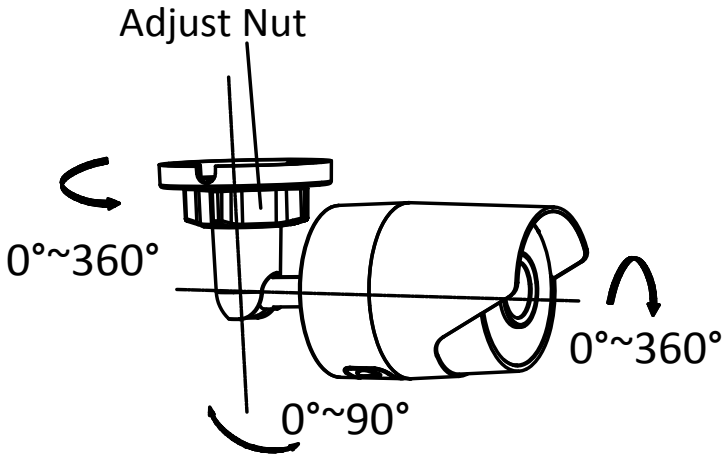

Figure 2-3 3-axis Adjustment

2.2 **Installation of Water-proof Jacket**

It is recommended to adopt the water-proof jacket (supplied) for the network interface when the camera is installed outdoor.

Steps:

1. If the network cable has been settled down, cut off the plug of the network cable first.
2. Route the network cable through the following components in sequence: fix nut, water-proof ring, and the main body of the water-proof jacket, as shown in the figure.
3. Insert the water-proof ring into the main body of the water-proof jacket, to increase the sealing ability of the components.
4. Wire the plug and network cables up.
5. Fix the O-ring to the network interface of the camera, and then connect the network cables.

6. Wrap the network interface with the main body of the water-proof jacket, and then rotate the fix nut clockwise to assemble it to the main body of the water-proof jacket.

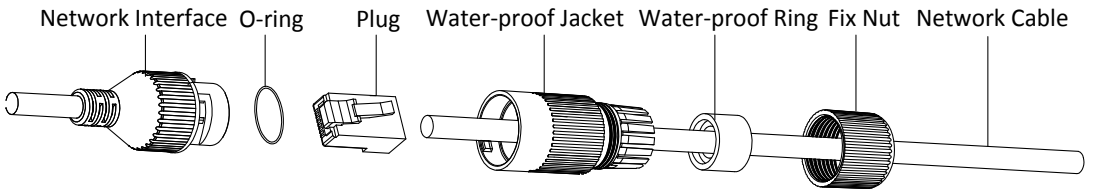

Figure 2-4 Install Water-proof Jacket

3 Setting the Network Camera over the LAN

Note:

You shall acknowledge that the use of the product with Internet access might be under network security risks. For avoidance of any network attacks and information leakage, please strengthen your own protection. If the product does not work properly, please contact with your dealer or the nearest service center.

3.1 **Wiring**

Please connect to the camera to the network according to the following figures

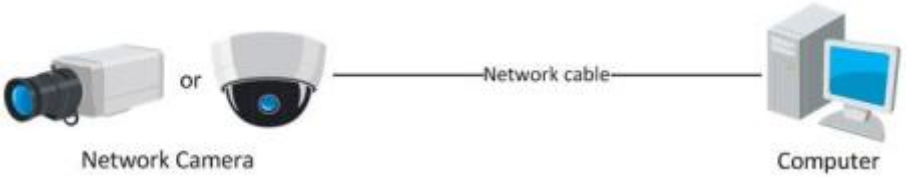

Figure 3-1 Connecting Directly

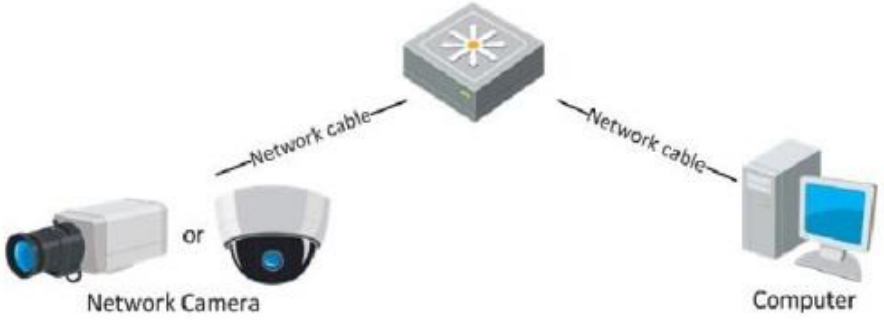

Figure 3-2 Connecting via a Switch or a Router

3.2 **Activating the Camera**

You are required to activate the camera first by setting a strong password for it before you can use the camera.

Activation via Web Browser, Activation via SADP, and Activation via Client Software are all supported. We will take activation via SADP software and Activation via Web Browser as examples to introduce the camera activation. Please refer to the User Manual of Network Camera for Activation via Client Software.

3.2.1 **Activation via Web Browser**

Steps:

1. Power on the camera, and connect the camera to the network.
2. Input the IP address into the address bar of the web browser, and click Enter to enter the activation interface.

   Notes:

   - The default IP address of the camera is 192.168.1.64.
   - For the camera enables the DHCP by default, you need to activate the camera via SADP software and search the IP address.

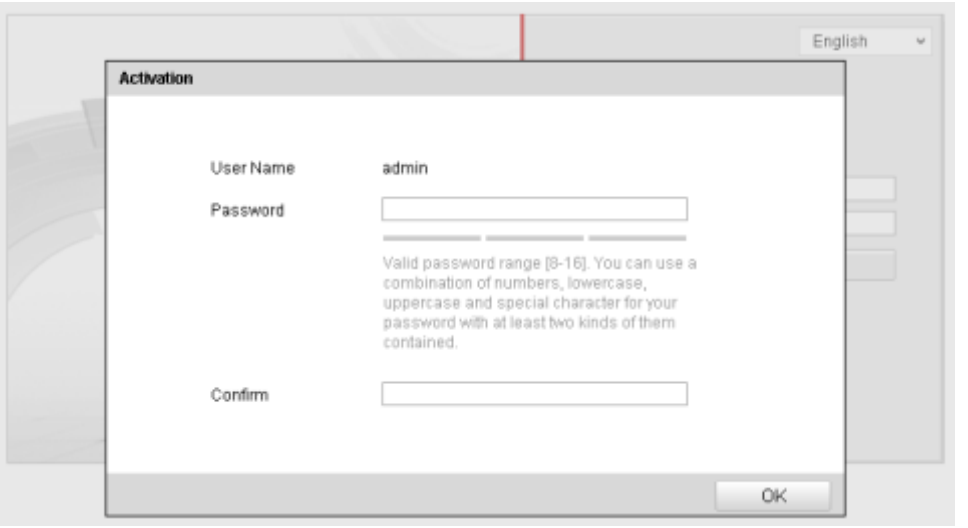

Figure 3-3 Activation Interface(Web)

3. Create a password and input the password into the password field.

> **<u>STRONG PASSWORD RECOMMENDED</u>**– *We highly recommend you create a strong password of your own choosing (using a minimum of 8 characters, including upper case letters, lower case letters, numbers, and special characters) in order to increase the security of your product. And we recommend you reset your password regularly, especially in the high security system, resetting the password monthly or weekly can better protect your product.*

4. Confirm the password.
5. Click **OK** to save the password and enter the live view interface.

3.2.2 **Activation via SADP Software**

SADP software is used for detecting the online device, activating the camera, and resetting the password.

Get the SADP software from the supplied disk or the official website, and install the SADP according to the prompts. Follow the steps to activate the camera, please refer to the User Manual of Network Camera for other two activation methods.

Steps:

1. Run the SADP software to search the online devices.
2. Check the device status from the device list, and select the inactive device.

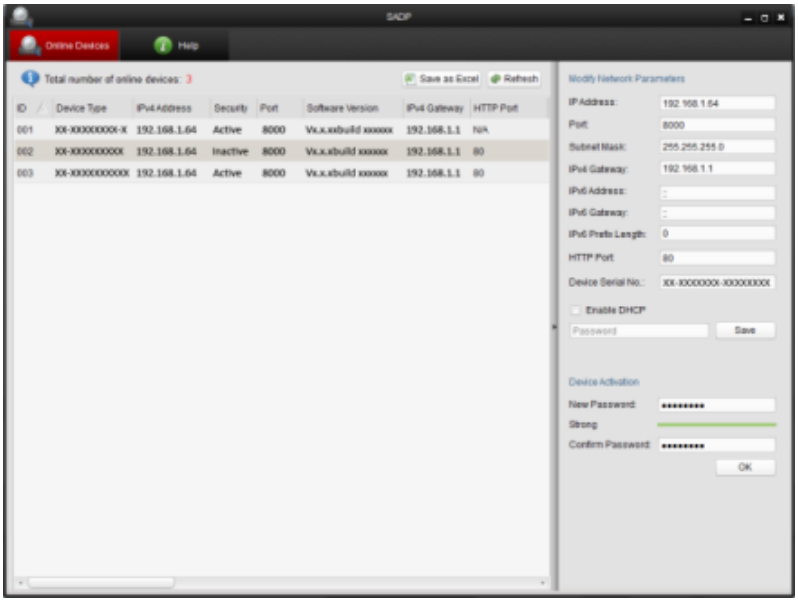

Figure 3-4 SADP Interface

Note:

The SADP software supports activating the camera in batch. Please refer to the user manual of SADP software for details.

3. Create a password and input the password in the password field, and confirm the password.

> **STRONG PASSWORD RECOMMENDED**– *We highly recommend you create a strong password of your own choosing (using a minimum of 8 characters, including upper case letters, lower case letters, numbers, and special characters) in order to increase the security of your product. And we recommend you reset your password regularly, especially in the high security system, resetting the password monthly or weekly can better protect your product.*

4. Click **OK** to save the password.

   You can check whether the activation is completed on the popup window. If activation failed, please make sure that the password meets the requirement and try again.

3.3 Modifying the IP Address

Purpose:

To view and configure the camera via LAN (Local Area Network), you need to connect the network camera in the same subnet with your PC. Then, install the SADP software or client software to search and change the IP of network camera. We will take modifying the IP Address via SADP software as an example to introduce the IP address modification.

Steps:

1. Run the SADP software.
2. Select an active device.

Note:

Please refer to Chapter 3.2 to activate the camera if the camera is inactive.

3. Change the device IP address to the same subnet with your computer by either modifying the IP address manually or checking the checkbox of Enable DHCP.

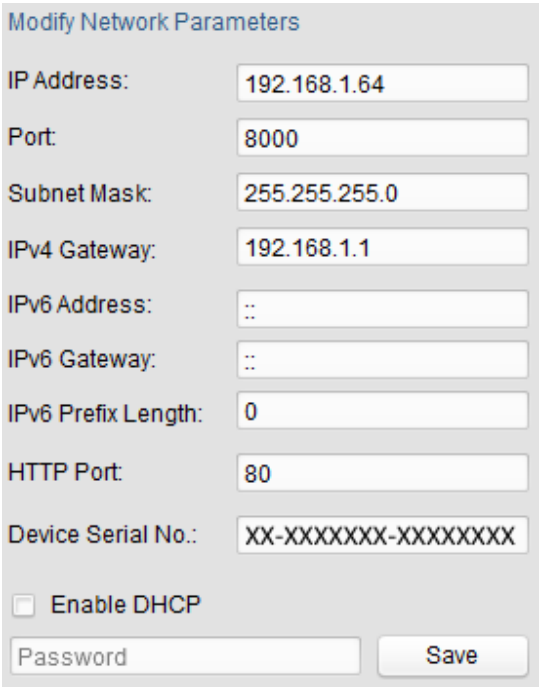

Figure 3-5 Modify the IP Address

4. Input the password to activate your IP address modification.

The batch IP address modification is supported by the SADP; please refer to the User Manual of SADP for details.

4 Accessing via Web Browser

System Requirement:

Operating System: Microsoft Windows XP SP1 and above version

CPU: 2.0 GHz or higher

RAM: 1G or higher

Display: 1024×768 resolution or higher

Web Browser: Internet Explorer 8.0 and above version, Apple Safari 5.0.2 and above version, Mozilla Firefox 5.0 and above version and Google Chrome 18 and above version

Steps:

1. Open the web browser.
2. In the browser address bar, input the IP address of the network camera, and press the **Enter** key to enter the login interface.

   Note:

   - The default IP address is 192.168.1.64.
   - If the camera is not activated, please activate the camera first according to Chapter 3.2.
3. Input the user name and password.

   The admin user should configure the device accounts and user/operator permissions properly. Delete the unnecessary accounts and user/operator permissions.

   Note:

   The device IP address gets locked if the admin user performs 7 failed password attempts (5 attempts for the user/operator).

4. Click **Login**.

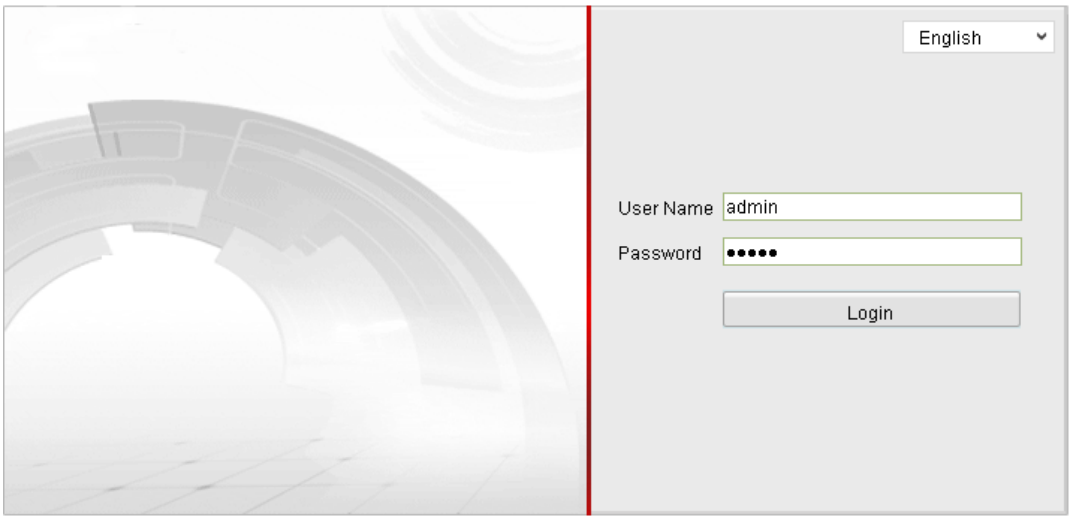

Figure 4-1 Login Interface

5. Install the plug-in before viewing the live video and managing the camera. Please follow the installation prompts to install the plug-in.

NOTE

You may have to close the web browser to finish the installation of the plug-in.

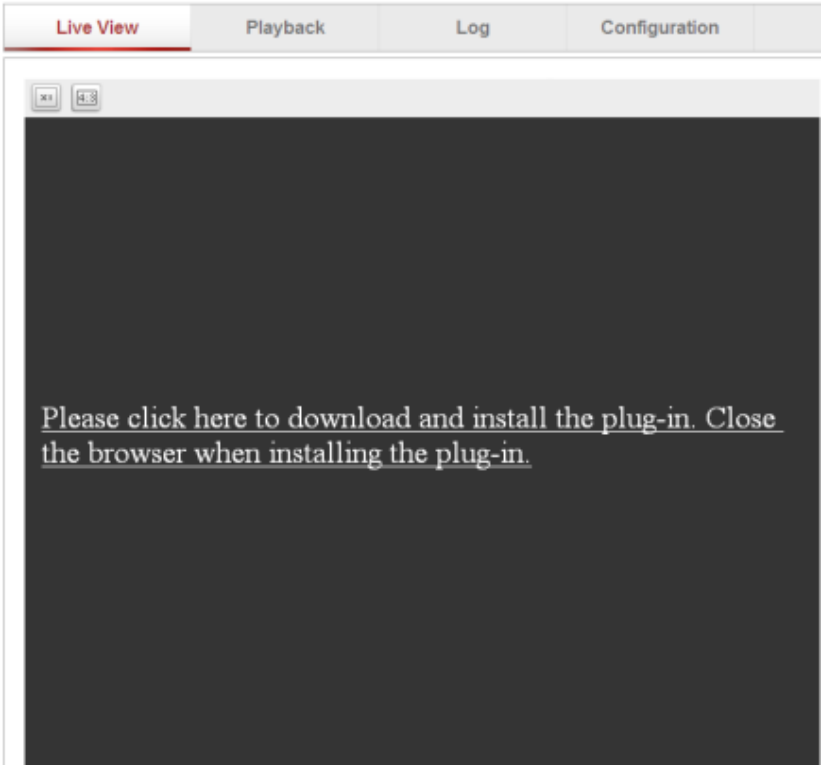

Figure 4-2 Download Plug-in

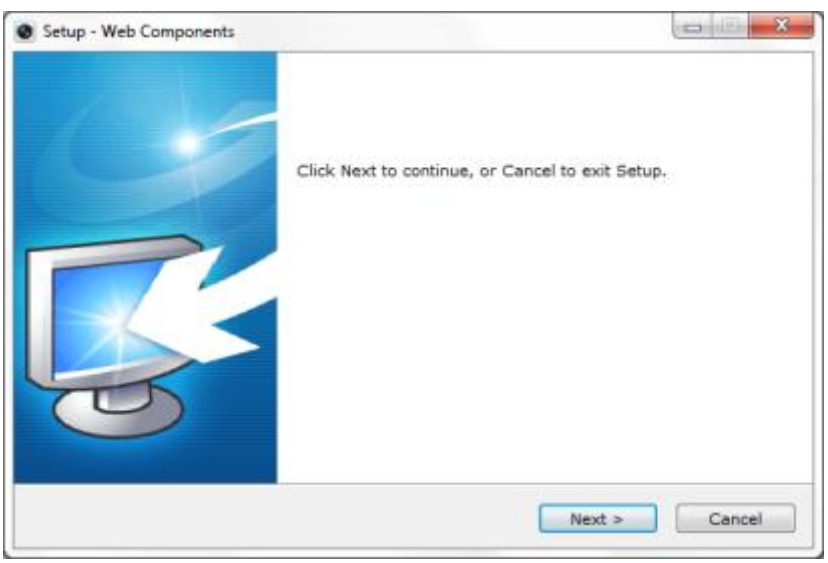

Figure 4-3 Install Plug-in (1)

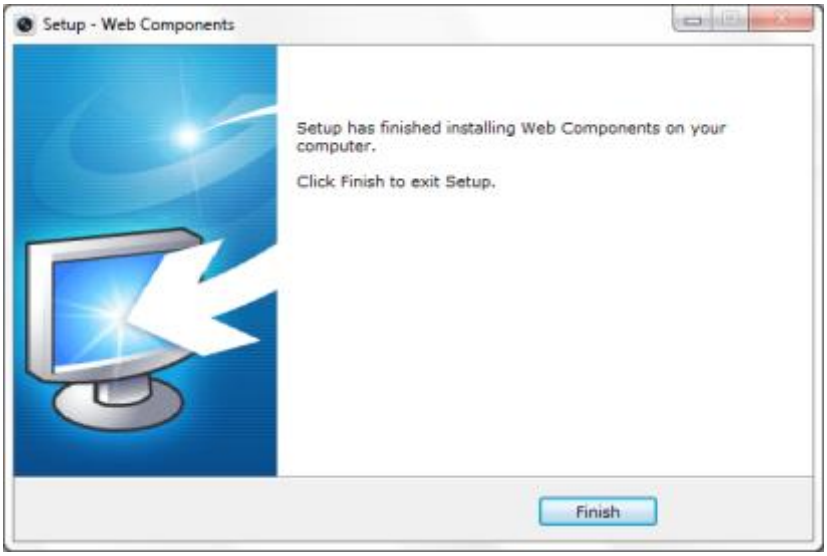

Figure 4-4 Install Plug-in (2)

6. Reopen the web browser after the installation of the plug-in and repeat steps 2~4 to login.

NOTE

For detailed instructions of further configuration, please refer to the user manual of network camera.

First Choice for Security Professionals

©Hikvision. All Rights Reserved.