Trademarks

LAUNCH is a registered trademark of LAUNCH TECH CO., LTD. in China and other countries.

Android is a trademark of Google LLC. All other marks are trademarks or registered trademarks of their respective holders.

Copyright Information

Copyright © 2025 by LAUNCH TECH CO., LTD. (also called LAUNCH for short). All rights reserved. No part of this publication may be reproduced, stored in a retrieval system, or transmitted in any form or by any means, electronic, mechanical, photocopying and recording or otherwise, without the prior written permission.

Statement: LAUNCH owns the complete intellectual property rights for the software used by this product. For any reverse engineering or cracking actions against the software, LAUNCH will block the use of this product and reserve the right to pursue their legal liabilities.

Disclaimer of Warranties and Limitation of Liabilities

All information, illustrations, and specifications in this manual are based on the latest information available at the time of publication.

The right is reserved to make changes at any time without notice. We shall not be liable for any direct, special, incidental, indirect damages or any economic consequential damages (including the loss of profits) due to the use of the document.

Using This Manual

This manual contains device usage instructions.

Some illustrations shown in this manual may contain modules and optional equipment that are not included in your system.

The following conventions are used.

Bold Text

Bold text is used to highlight selectable items such as buttons and menu options.

Example:

Tap **OK**.

Notes

A NOTE provides helpful information such as additional explanations, tips, and comments.

Example:

Note: Remember to remove the VCI connector from the vehicle's DLC after use.

Warning

Warning indicates a hazardous situation which, if not avoided, could result in minor or moderate injury to the operator or to bystanders.

Example:

Warning: Retrieving and using DTCs for troubleshooting vehicle operation is only one part of an overall diagnostic strategy. Never replace a part based only on the DTC definition. Each DTC has a set of testing procedures, instructions and flow charts that must be followed to confirm the location of the problem. This information can be found in the vehicle's service manual.

Danger

Danger indicates an imminently or potentially hazardous situation which, if not avoided, could result in death or serious injury to the operator or to bystanders.

Example:

Danger: If you must drive the vehicle in order to perform a troubleshooting procedure, always have a second person help you. Trying to drive and operate the diagnostic tool at the same time is dangerous, and could cause a serious traffic accident.

Illustrations

Illustrations used in this manual are samples, the actual testing screen may vary for each vehicle being tested. Observe the menu titles and on-screen instructions to make correct option selection.

Important Safety Precautions

To avoid personal injury, property damage, or accidental damage to the product, read all of the information in this section before using the product.

DANGER

- When an engine is operating, keep the service area well-ventilated or attach a building exhaust removal system to the engine exhaust system. Engines produce various poisonous compounds (hydrocarbon, carbon monoxide, nitrogen oxides, etc.) that cause slower reaction time and result in death or serious personal injury.
- Please use the included battery and power adaptor. Risk of explosion if the battery is replaced with an incorrect type.
- If you must drive the vehicle in order to perform a troubleshooting procedure, always have a second person help you. Trying to drive and operate the diagnostic tool at the same time is dangerous, and could cause a serious traffic accident.

WARNING

- Always perform automotive testing in a safe environment.
- Do not connect or disconnect any test equipment while the ignition is on or the engine is running.
- Before starting the engine, put the gear lever in the Neutral position (for manual transmission) or in the Park (for automatic transmission) position to avoid injury.
- NEVER smoke or allow a spark or flame in vicinity of battery or engine. Do not operate the tool in explosive atmospheres, such as in the presence of flammable liquids, gases, or heavy dust.
- Keep a fire extinguisher suitable for gasoline/chemical/electrical fires nearby.
- Wear an ANSI-approved eye shield when testing or repairing vehicles.
- Put blocks in front of the drive wheels and never leave the vehicle unattended while testing.
- Use extreme caution when working around the ignition coil, distributor cap, ignition wires and spark plugs. These components create hazardous voltage when the engine is running.
- To avoid damaging the tool or generating false data, please make sure the vehicle battery is fully charged and the connection to the vehicle DLC (Data Link Connector) is clear and secure.
- Retrieving and using DTCs for troubleshooting vehicle operation is only one part of an overall diagnostic strategy. Never replace a part based only on the DTC definition. Each DTC has a set of testing procedures, instructions and flow charts that must be followed to confirm the location of the problem. This information can be found in the vehicle's service manual.
- Automotive batteries contain sulfuric acid that is harmful to skin. In operation, direct contact with the automotive batteries should be avoided. Keep the ignition sources away from the battery at all times.
- Keep the tool dry, clean, free from oil, water or grease. Use a mild detergent on a clean cloth to clear the outside of the equipment when necessary.
- Keep clothing, hair, hands, tools, test equipment, etc. away from all moving or hot engine parts.
- Store the tool and accessories in a locked area out of the reach of children.
- Do not use the tool while standing in water.
- Do not expose the tool or power adapter to rain or wet conditions. Water entering the tool or power adaptor increases the risk of electric shock.
- This tool is a sealed unit. There are no end-user serviceable parts inside. All internal repairs must be done by an authorized repair facility or qualified technician. If there is any inquiry, please contact the dealer.
- Keep the tool far away from magnetic devices because its radiations can damage the screen and erase the data stored on the tool.

- Do not attempt to replace the internal rechargeable lithium battery. Contact the dealer for factory replacement.
- Do not disconnect battery or any wiring cables in the vehicle when the ignition switch is on, as this could avoid damage to the sensors or the ECU.
- Do not place any magnetic objects near the ECU. Disconnect the power supply to the ECU before performing any welding operations on the vehicle.
- Use extreme caution when performing any operations near the ECU or sensors. Ground yourself when you disassemble PROM, otherwise ECU and sensors can be damaged by static electricity.
- When reconnecting the ECU harness connector, be sure it is attached firmly, otherwise electronic elements, such as ICs inside the ECU, can be damaged.

Compliance Information

Model: OADD-PD1005A

FCC ID: XUJOADDPD1005A

Any Changes or modifications not expressly approved by the party responsible for compliance could void the user's authority to operate the equipment.

This device complies with Innovation, Science and Economic Development Canada's licence-exempt RSSs and part 15 of the FCC Rules. Operation is subject to the following two conditions:

(1) This device may not cause harmful interference; and

(2) This device must accept any interference received, including interference that may cause undesired operation.

Cet appareil est conforme aux RSSs exempts de licence d' Innovation, Sciences et Développement économique Canada et à la partie 15 des règles de la FCC. Le fonctionnement est soumis aux deux conditions suivantes:

(1) Cet appareil ne doit pas causer d'interférences nuisibles; et

(2) Cet appareil doit accepter toute interférence reçue, y compris les interférences susceptibles de provoquer un fonctionnement indésirable.

This Class B digital apparatus complies with Canadian ICES-003.

Cet appareil numérique de la classe B est conforme à la norme NMB-003 du Canada.

The device for operation in the band 5150-5250MHz is only for indoor use.

Note: This equipment has been tested and found to comply with the limits for a Class B digital device, pursuant to part 15 of the FCC Rules. These limits are designed to provide reasonable protection against harmful interference in a residential installation. This equipment generates, uses and can radiate radio frequency energy and, if not installed and used in accordance with the instructions, may cause harmful interference to radio communications. However, there is no guarantee that interference will not occur in a particular installation. If this equipment does cause harmful interference to radio or television reception, which can be determined by turning the equipment off and on, the user is encouraged to try to correct the interference by one or more of the following measures:

- Reorient or relocate the receiving antenna.
- Increase the separation between the equipment and receiver.
- Connect the equipment into an outlet on a circuit different from that to which the receiver is connected.
- Consult the dealer or an experienced radio/TV technician for help.

Specific Absorption Rate (SAR) information

This product meets the government's requirements for exposure to radio waves. The guidelines are based on standards that were developed by independent scientific organizations through periodic and thorough evaluation of scientific studies. The standards include a substantial safety margin designed to assure the safety of all persons regardless of age or health.

RF Exposure Information and Statement

The SAR limit is 1.6 W/kg averaged over one gram of tissue. This device has also been tested against this SAR limit. This device was tested for typical body-worn operations 0mm from the body. To maintain compliance with RF exposure requirements, use accessories that maintain a 0mm separation distance between the user's body.

Body-worn Operation

This device was tested for typical body-worn operations. To comply with RF exposure requirements, a minimum separation distance of 0mm must be maintained between the user's body, including the antenna. Third-party belt-clips, holsters, and similar accessories used by this device should not contain any metallic components. Body-worn accessories that do not meet these requirements may not comply with RF exposure requirements and should be avoided. Use only the supplied or an approved antenna.

Cet appareil a été testé pour des opérations typiques portées sur le corps, pour satisfaire aux exigences relatives à l'exposition RF, une distance minimale de séparation de 0mm doit être maintenue entre le corps de l'utilisateur, y compris l'antenne. Les clips de ceinture, les étuis et les accessoires similaires de tiers utilisés par cet appareil ne doivent pas contenir de composants métalliques. Les accessoires portés sur le corps qui ne répondent pas à ces exigences ne peuvent pas être conformes aux exigences relatives à l'exposition RF et doivent être évités. Utilisez uniquement l'antenne fournie ou une antenne approuvée.

This device is in compliance with the essential requirements and other relevant provisions of Radio Equipment Directive 2014/53/EU. The RF frequencies can be used in Europe without restriction.

TABLE OF CONTENTS

1 Introduction 1
1.1 Packing List 1
1.2 Components & Controls 2
1.2.1 Scan Tool 2
1.2.2 SmartLink C Device 3
1.3 Technical Specifications 5
2 Getting Started 6
2.1 Charging & Powering On 6
2.2 Screen Layout 6
2.3 Language Setup 6
2.4 Network Setup 6
2.5 Registration & Update 7
2.6 Job Menu 8
3 Connection & Communication Setup 10
3.1 Connection 10
3.2 Communication Setup 10

1 Introduction

1.1 Packing List

Common accessories are same, but for different destinations, the accessories may vary. For detailed accessory items, please consult from the seller or check the packing list supplied with this tool together.

1. Scan tool (model: OADD-PD1005A) x 1
2. SmartLink C device (model: S4006) **x** 1
3. Diagnostic cable x 1
4. Power adaptors **x** 2
5. Data cable **x** 1
6. Password envelope x 1
7. Crossover cable x 1
8. Quick start guide x 1
9. Non-16pin adaptor kit for passenger cars (Optional)

1.2 Components & Controls

There are two main components to the diagnostic system: Scan Tool and SmartLink C Device.

1.2.1 Scan Tool

The scan tool acts as the central processing system, which is used to receive and analyze the live vehicle data from the SmartLink C device and then output the test result.

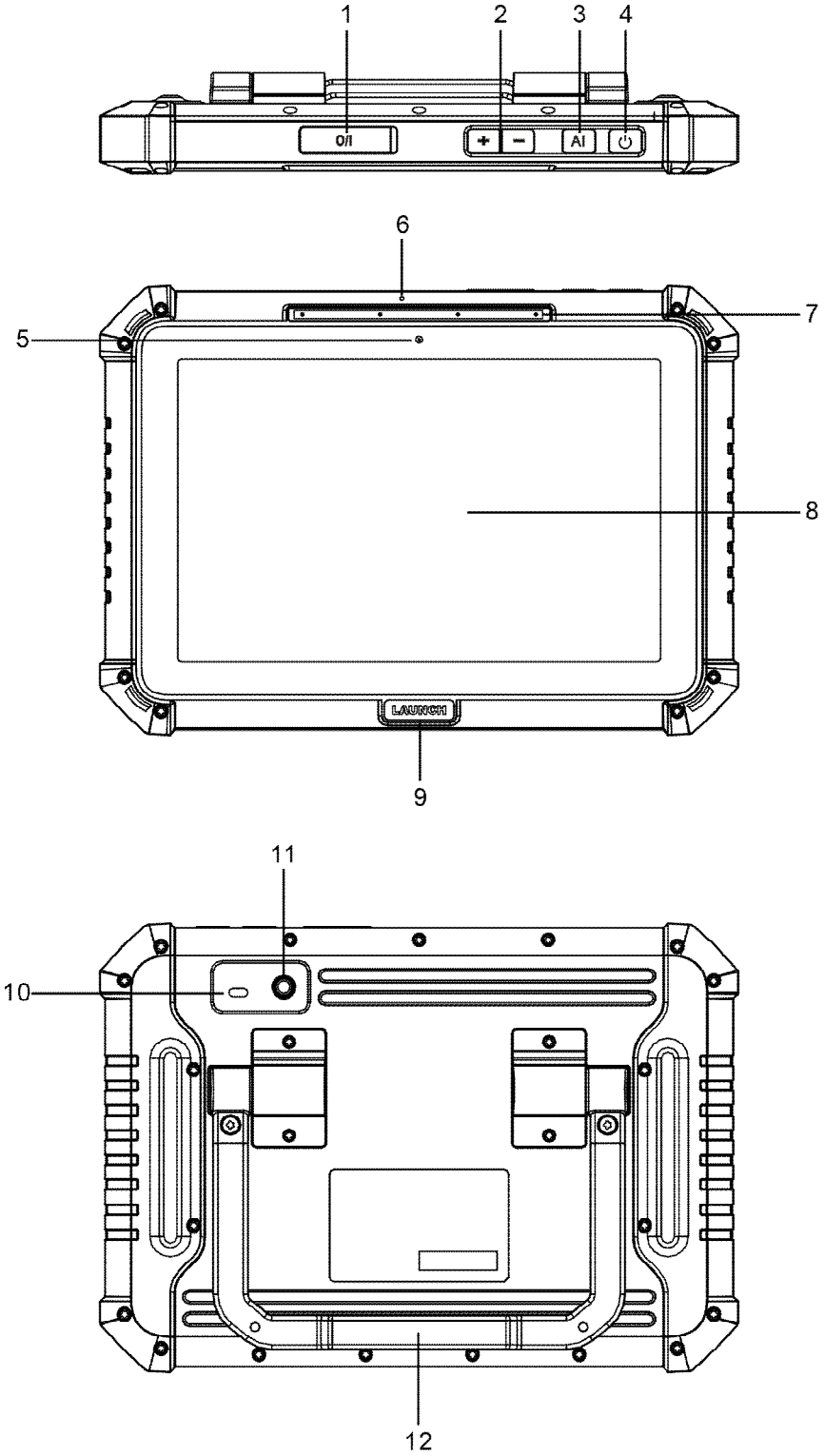

1. **Data I/O Port**

1). Type-A Port

- Connect it to the SmartLink C device to perform vehicle diagnosis.
- Connect it to the add-on module to extend the functions of the scan tool.

2). Type-C Port

- Charge the scan tool via the power adaptor.

2. **Volume Buttons**

Adjust the volume.

Note: Press and hold [POWER] and [VOL -] key to capture the current screenshot.

3. **AI Function Button**

Press it to activate the AI (Artificial Intelligence) function.

4. **Power/Screen Lock Button**

To turn the scan tool on/off with long press, or lock the screen with short press.

5. **Front Camera**

Snapshot the view ahead the screen.

6. **Microphone (For system apps)**

Convert voice into an electrical signal.

7. **Microphone (Only for AI function)**

Convert voice into an electrical signal.

8. **Touch Screen**

Indicate the test results.

9. **Breathing LED**

It illuminates and flashes red while the scan tool is charging. Once charging is finished, it will illuminate solid green.

10. **Rear Camera**

Snapshot the view in front of the scan tool.

11. **Camera Flash**

Produce a flash of artificial light.

12. **Adjustable Kickstand**

Flip out it to any angle and work comfortable at your desk, or hang it on automotive part.

1.2.2 SmartLink C Device

The SmartLink C device features powerful functions and it can be applied in the following situations:

1). When as a VCI (Vehicle Communication Interface), it needs to work in conjunction with the **Diagnose** module of the scan tool, which is used to obtain vehicle data, and then send it to the scan tool for analysis wirelessly or via data cable.

2). When as a SmartLink C (Customer) dongle, it does not communicate with the scan tool, but it needs to work together with the **SmartLink** module of the scan tool. The scan tool is mainly used to issue remote diagnostic requests, and the SmartLink C dongle is networked to receive and execute commands from the remote SmartLink B (Business).

3). When as a local J2534 PassThru device, it can be used in conjunction with the PC installed with OEM diagnostic software.

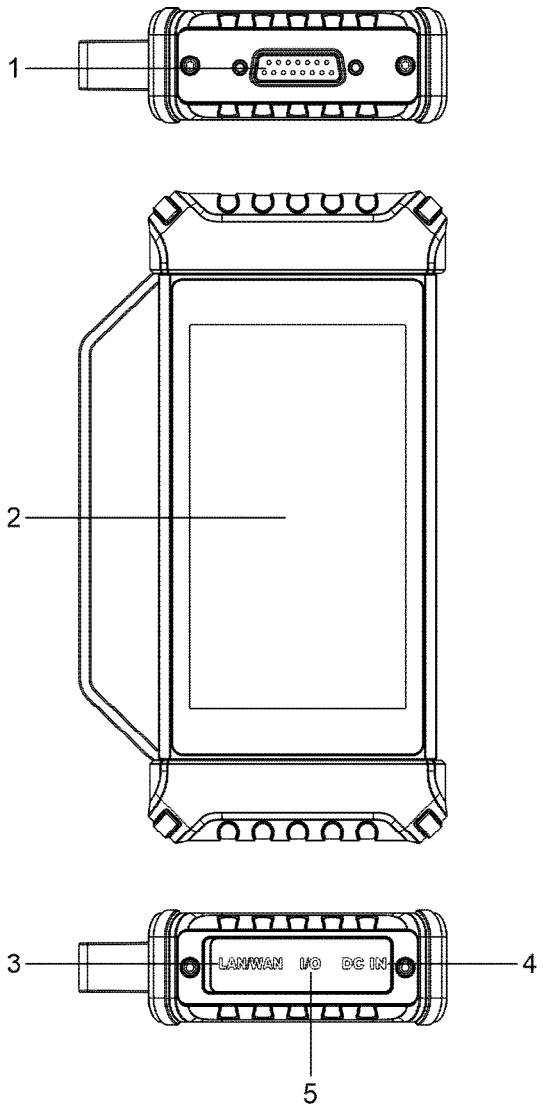

1. **DB-15 diagnostic connector**

Connect the SmartLink C device to the vehicle's DLC (Data Link Connector) port via the diagnostic cable.

2. **Touch screen**

3. **LAN/WAN port**

Connect the SmartLink C device to the Internet via the crossover cable. It only applies to the SmartLink Super Remote Diagnostics.

4. **DC-IN power jack**

It can obtain power via connecting the diagnostic cable to the vehicle's DLC port or connecting to an external DC power supply.

⚠ Warning: It is prohibited to connect this power jack to an external DC power supply when the SmartLink C device is properly connected to the vehicle's DLC port.

No responsibility can be assumed for any damage or loss caused as a result of not strictly following the warning.

5. **Data I/O port**

- Connect it to the scan tool to perform vehicle diagnosis.
- Connect it to the PC to perform J2534 reprogramming when as a J2534 PassThru device.

1.3 Technical Specifications

1. Scan tool

Operating System: Andriod™ 15

CPU: 8-core Processor, 2.0GHz

Display: 10.1 inch touch screen with a resolution of 1920 x 1200

Memory: 8GB

Hard disk: 256GB

Connectivity:

- Dual Wi-Fi (One supports 802.11a/b/g/n/ac and the other supports 802.11a/b/g/n/ac/ax)
- Universal serial BUS ports (1 x Type-C + 1 x Type-A)

Camera: 8MP front-facing camera + 13MP rear-facing camera

Dimension: 287.2mm x 202.2mm x 45.6mm

Supported Protocols: CAN2.0/CANFD/DOIP/J2534/RP1210/D-PDU

Operating temperature: 0℃~ 50℃(32°F to 122°F)

Storage temperature: -20℃~ 70℃(-4°F ~158°F)

2. SmartLink C device

Dimension: 187.6mm x 106mm x32.8mm

Working voltage: DC 9~36V

Power consumption: ≤ 6W

Communication: wireless and wired

Working temperature: 0℃ ~ 50℃

2 Getting Started

2.1 Charging & Powering On

Notes:

- Only use the included power adaptor or docking station to recharge the tool. Use of any other adaptor or docking station will damage the tool. We assume no responsibility for damage or loss resulting from using other similar adaptors or docking station other than the specified one.
- Always charge on a non-flammable surface in a well-ventilated area.

To check the battery power level, press and hold the Power button about 3 seconds to turn on the tool. Power level is indicated as a percentage in the upper right corner of the screen. If the power level drops below 10% while the tool is on, a prompt message will appear on the screen. Follow the steps below to charge the scan tool:

1. Connect one end of the power adaptor to the Type-C port of the tool, and the other end to the AC outlet.
2. The breathing LED illuminates and flashes red and the charging symbol will appear on the screen.
3. Once it illuminates solid green, it indicates that the battery is fully charged. Disconnect the power adaptor from the AC outlet.
4. Press and hold the ***POWER*** button for about 3 seconds to turn on the tool. The system starts initializing and then enters the home screen.

   To turn the tool off, press and hold the ***POWER*** button until an option menu appears. Tap **Power Off**.

2.2 Screen Layout

On-screen keys and status bar on the bottom of the screen are as follows:

Tap to return to the previous screen or exit the application.

Tap to jump to the home screen.

Tap to display a list of applications that are currently running or recently used.

Tap to capture the current screen and all captured screenshots are stored in the Screenshots folder.

shows whether the VCI is connected properly or not.

Tap to visit the official website.

2.3 Language Setup

The scan tool supports multiple languages. To change the language of the tool, please do the following:

1. On the home screen, tap **Settings -> System -> Language & input -> Languages**.
2. Tap the desired language from the list and the system will change to the chosen language.

2.4 Network Setup

The scan tool has dual built-in Wi-Fi communication modules. One is used to communicate with the SmartLink C device, and the other allows the tool to get online. Once you're online, you can register your tool, update diagnostic software & APK, browse the Internet and send email on your network.

Note: Once WLAN is set as ON, the tool will consume more power. While WLAN keeps unused, please turn it off to conserve battery power.

1. On the home screen, tap **Settings -> Network & internet -> Internet -> Wi-Fi**.
2. Tap or slide the Wi-Fi switch to ON, the tool starts searching for all available wireless LANs.
3. Choose the desired Wi-Fi access point / network,

- If the network you chose is open, you can connect directly.
- If the selected network is encrypted, you have to enter the right security key (network password).

When this tool is in range, it will connect to the previously linked network automatically.

2.5 Registration & Update

For new users, you will need to experience a user registration process before getting started.

Tap the application icon on the home screen, and then tap **Login** on the upper right corner of the screen. The following popup will appear.

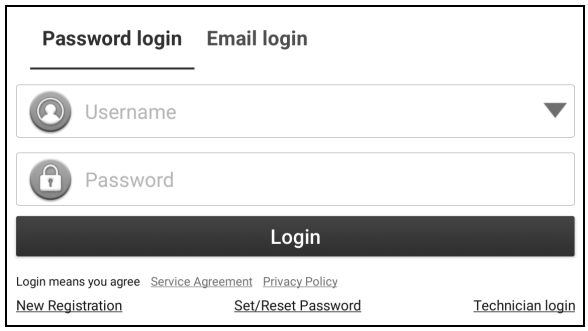

There are two methods available for users to login: *Password login* and *Email login*.

1. If you have not registered any authorized account of LAUNCH scan tool, please use *Email login*. Tap **New Registration**, the following screen will appear.

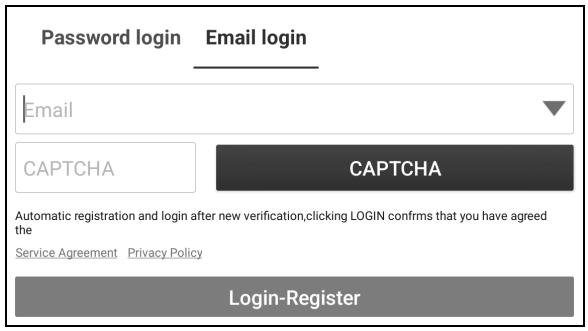

Input the Email address, tap CAPTCHA and enter the received verification code. Tap **Login-Register** to continue.

A. <u>If no scan tools are bound to this Email before</u>, follow the steps below to proceed:

1). After the following popup appears, tap **ACTIVATE VCI** to go to the next step.

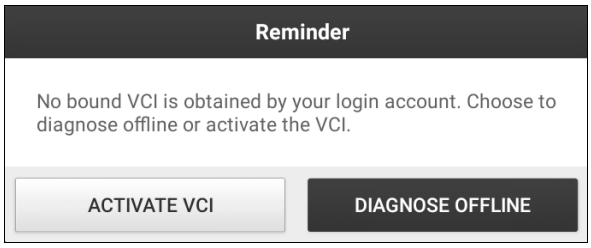

2). Input the 12-digit Product Serial Number and 8-digit Activation Code (can be obtained from the password envelope), and then tap **ACTIVATE**.

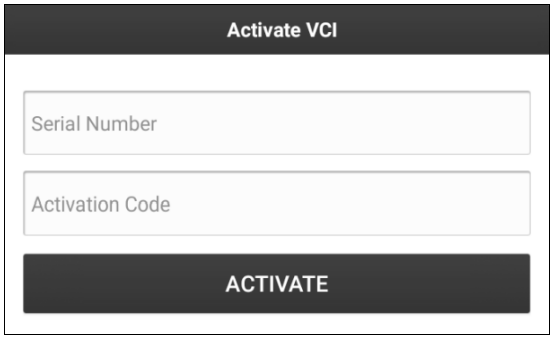

3). After the VCI device is successfully activated, the system automatically enter the update center. Tap Update to update all available software.

Note: All software is updated periodically. It is recommended to check regularly for updates and install the latest software version for the best service, functions and experience.

It is strongly recommended to set a new password by tapping the **Set/Reset Password** on the "Password login" screen immediately after the registration is completed. So you can also use the email and password to log in the diagnostic system in the future.

B. If there are scan tools bound to this Email, a list of the bound VCIs will pop up on the screen. In this case,

1). Tap **Activate**. Input the Product Serial Number and Activation Code, and then tap **Activate**.

2). Go to *Software Update* to update all available software.

2. If you have an authorized account of LAUNCH scan tool, please use Password login. Input the username and password (If you forgot the password, tap **Set/Reset Password** to set a new one), and tap **Login** to login the diagnostic system.

2.6 Job Menu

It mainly includes the following items:

Name	Description
Intelligent Diagnose	• Obtain vehicle data from the cloud server to perform quick test via reading VIN, to avoid various defects resulting from step-by-step menu selection. • Check the historical repair records online.
Local Diagnose	Diagnose a vehicle manually.
Remote Diagnose	There are two remote diagnosis platforms available: SmartLink Super remote diagnosis and X431 Remote diagnosis.
EV	To diagnose the electronic control systems, detect battery pack and perform some service functions of new-energy vehicles. Note: This function needs to work with New Energy Vehicle Diagnosis Add-on Kit (optional), which can be purchased from the authorized dealer.
Special Function	It offers coding, reset, relearn and more service functions, to help vehicles get back to functional status after repair or replacement.
Toolbox	Provides some additional add-on tools to extend the functions of the scan tool.
Software Update	Update vehicle diagnostic software and APK.
X-431 Diagnostic Kit	Includes vehicle coverage, CANBUS pin detection, CANScope, and Fix connector firmware/system etc.
Feedback	Feedback the recent 20 diagnostic logs to us when you encounter any unsolved problems.

Know Your Customer	Assist merchants in conducting business opportunity analysis, customer management, and diagnostic statistics.
Mall	An online diagnostic software store. This module enables you to subscribe some extra software or service functions that are not integrated in the tool online.
LAUNCH Academy	Include abundant repair case, operation skills and training videos for quick reference.
Repair Info	Check repair information and ask for support via Facebook or from after-sales team.
User Info	Manage VCI, diagnostic reports & records, change password, order and logout / login etc.
Other Modules	Include Settings and About.

3 Connection & Communication Setup

3.1 Connection

1. Make sure that the vehicle battery voltage range is 9-14V (for passenger cars) or 18-30V (for commercial vehicles) and the vehicle ignition is turned off.
2. Find the vehicle's DLC location.

   For passenger cars, the DLC is usually located 12 inches from the center of the instrument panel, under or around the driver's side for most vehicles. For some vehicles with special designs, the DLC location may vary.

   If the DLC cannot be found, refer to the vehicle's service manual for the location.

   For commercial vehicles, the DLC is always located in driver's cab.
3. Refer to the following illustrations to make connection.

   The method used to connect the VCI device to a vehicle's DLC depends on the vehicle's configuration as follows:

   For OBD II vehicles, use the included diagnostic cable (DB15F to HD15F data cable and HD15M to OBD16 adaptor) to connect the VCI to the vehicle's DLC port.

   For non-OBDII vehicles, refer to the above figure to make connection.

   1. Select the appropriate adaptor according to the vehicle's DLC port type.
   2. Loosen the captive screws of the DB15F to HD15F data cable and disconnect the HD15M to OBD16 adaptor from the data cable.
   3. Connect the data cable with the target adaptor (optional) and tighten the screws. Other steps shall also apply.

If you choose to perform vehicle diagnosis via data cable, connect one end of the data cable into the VCI, and the other end into the data I/O port of the tool.

3.2 Communication Setup

There are two kinds of ways available for the tool to communicate with the VCI device: wireless and wired (USB).

After the user registration is successfully finished, the wireless communication between the tool and the VCI device is automatically established and user has no need to configure it again.

The USB connection is a simple & quick way to establish communication between the tool and the VCI. After properly connecting the data cable from the tool to the VCI, the VCI navigation button at the bottom of the screen will be enabled indicating the USB connection is successful.

Note: The USB connection provides the most stable and fastest communication. When all communication methods are applied at the same time, the tool will use the wired communication as the default priority.