FCC Test Report

Applicant	:	**Launch Tech Co., Ltd.**
Address	:	**Launch Industrial Park, North of Wuhe Rd., Banxuegang, Longgang, Shenzhen, 518129, China**
Product Name	:	**Automotive Diagnostic Tool**
Report Date	:	**May 11, 2024**

Shenzhen Anbotek Compliance Laboratory Limited

Contents

1. General Information 5
1.1. Client Information 5
1.2. Description of Device (EUT) 5
1.3. Auxiliary Equipment Used During Test 6
1.4. Operation channel list 7
1.5. Description of Test Modes 7
1.6. Measurement Uncertainty 7
1.7. Test Summary 8
1.8. Description of Test Facility 9
1.9. Disclaimer 9
1.10. Test Equipment List 10
2. Antenna requirement 11
2.1. Conclusion 11
3. Conducted Emission at AC power line 12
3.1. EUT Operation 12
3.2. Test Setup 12
3.3. Test Data 13
4. Maximum Conducted Output Power 15
4.1. EUT Operation 15
4.2. Test Setup 15
4.3. Test Data 15
5. Emissions in frequency bands (below 1GHz) 17
5.1. EUT Operation 17
5.2. Test Setup 18
5.3. Test Data 19
6. Emissions in frequency bands (above 1GHz) 21
6.1. EUT Operation 21
6.2. Test Setup 22
6.3. Test Data 23
APPENDIX I -- TEST SETUP PHOTOGRAPH 26
APPENDIX II -- EXTERNAL PHOTOGRAPH 26
APPENDIX III -- INTERNAL PHOTOGRAPH 26

TEST REPORT

Applicant	:	Launch Tech Co., Ltd.
Manufacturer	:	Launch Tech Co., Ltd.
Product Name	:	Automotive Diagnostic Tool
Test Model No.	:	OADD-PD1302A
Reference Model No.	:	OADD-PD1302x (x=A~Z, indicating configuration difference)
Trade Mark	:	LAUNCH
Rating(s)	:	Input: 12V⎓ 4A(with DC 7.6V, 9360mAh battery inside)
Test Standard(s)	:	**47 CFR Part 15.247**

The device described above is tested by Shenzhen Anbotek Compliance Laboratory Limited to determine the maximum emission levels emanating from the device and the severe levels of the device can endure and its performance criterion. The measurement results are contained in this test report and Shenzhen Anbotek Compliance Laboratory Limited is assumed full of responsibility for the accuracy and completeness of these measurements. Also, this report shows that the EUT (Equipment Under Test) is technically compliant with above listed standard(s) requirements.
This report applies to above tested sample only and shall not be reproduced in part without written approval of Shenzhen Anbotek Compliance Laboratory Limited.

Date of Receipt: Mar. 26, 2024

Date of Test: Mar. 26, 2024 to May 11, 2024

Prepared By: Ella Liang

(Ella Liang)

Approved & Authorized Signer: Edward pan

(Edward Pan)

Revision History

Report Version	Description	Issued Date
R00	Original Issue.	May 11, 2024

Note 1:
This is a Class II application which was based on the certified FCC ID: XUJOADDPD1302. The difference between the original device and current one described as following:

1. Change the model name to “OADD-PD1302x (x=A~Z, indicating configuration difference)”.
2. Change the Product Name to “Automotive Diagnostic Tool”.
3. Change the trade mark to “LAUNCH”.
4. Add the adapter with PSY1204000.
5. Change the EUT appearance shape.
6. Remove the LTE part of the motherboard.

The changes are not related with the other RF parameters, only conducted emission and radiation spurious emission were retested with adapter PSY1204000.

1. General Information

1.1. Client Information

Applicant	:	Launch Tech Co., Ltd.
Address	:	Launch Industrial Park, North of Wuhe Rd., Banxuegang, Longgang, Shenzhen, 518129, China
Manufacturer	:	Launch Tech Co., Ltd.
Address	:	Launch Industrial Park, North of Wuhe Rd., Banxuegang, Longgang, Shenzhen, 518129, China

1.2. Description of Device (EUT)

Product Name	:	Automotive Diagnostic Tool
Test Model No.	:	OADD-PD1302A
Reference Model No.	:	OADD-PD1302x (x=A~Z, indicating configuration difference) (Note: All samples are the same except the model number and appearance color, so we prepare "OADD-PD1302A" for test only.)
Trade Mark	:	LAUNCH
Test Power Supply	:	AC 120V/60Hz for adapter; DC 7.6V battery inside
Test Sample No.	:	1-2-1(Normal Sample), 1-2-2(Engineering Sample)
Adapter	:	Model: XDJ481D-120400 Input: 100-240V~50/60Hz 1.8A Output: 12.0V⎓4.0A 48.0W
Add Adapter	:	Model: PSY1204000 Input: 100-240V~50/60Hz 1.3A Output: 12.0V⎓4.0A 48.0W
RF Specification		
Operation Frequency	:	802.11b/g/n(HT20)/ax(HEW20): 2412MHz to 2462MHz; 802.11n(HT40)/ax(HEW40): 2422MHz to 2452MHz
Number of Channel	:	802.11b/g/n(HT20)/ax(HEW20): 11 Channels; 802.11n(HT40)/ax(HEW40): 7 Channels
Modulation Type	:	802.11b: DSSS(CCK, DQPSK, DBPSK); 802.11g: OFDM(BPSK, QPSK, 16QAM, 64QAM); 802.11n(HT20 and HT40): OFDM (BPSK, QPSK, 16QAM, 64QAM) 802.11ax(HEW20 and HEW4): OFDMA(BPSK, QPSK, 16QAM, 64QAM, 256QAM, 1024QAM)
Antenna Type	:	FPC Antenna
Antenna Gain(Peak)	:	ANT 1: 1.51dBi ANT 2: 3.1dBi

Remark:
(1) All of the RF specification are provided by customer.
(2) For a more detailed features description, please refer to the manufacturer's specifications or the User's Manual.
(3) ANT 1 and ANT 2 can not support MIMO.

1.3. Auxiliary Equipment Used During Test

Title	Manufacturer	Model No.	Serial No.
/	/	/	/

1.4. Operation channel list

Operation Band:

Channel	Frequency (MHz)	Channel	Frequency (MHz)	Channel	Frequency (MHz)
1	2412	5	2432	9	2452
2	2417	6	2437	10	2457
3	2422	7	2442	11	2462
4	2427	8	2447	/	/

1.5. Description of Test Modes

Pretest Modes	Descriptions
TM1	Keep the EUT in 802.11b transmitting mode.
TM2	Keep the EUT in 802.11g transmitting mode.
TM3	Keep the EUT in 802.11n(HT20) transmitting mode.
TM4	Keep the EUT in 802.11n(HT40) transmitting mode.
TM5	Keep the EUT in 802.11ax(HEW20) transmitting mode.
TM6	Keep the EUT in 802.11ax(HEW40) transmitting mode.

1.6. Measurement Uncertainty

Parameter	Uncertainty
Conducted emissions (AMN 150kHz~30MHz)	3.4dB
Occupied Bandwidth	925Hz
Conducted Output Power	0.76dB
Conducted Spurious Emission	1.24dB
Radiated spurious emissions (above 1GHz)	1G-6GHz: 4.78dB; 6G-18GHz: 4.88dB 18G-40GHz: 5.68dB
Radiated emissions (Below 30MHz)	3.53dB
Radiated spurious emissions (30MHz~1GHz)	Horizontal: 3.92dB; Vertical: 4.52dB
The measurement uncertainty and decision risk evaluated according to AB/WI-RF-F-032. This uncertainty represents an expanded uncertainty expressed at approximately the 95% confidence level using a coverage factor of k=2.	

1.7. Test Summary

Test Items	Test Modes	Status
Antenna requirement	/	P
Conducted Emission at AC power line	Mode1,2,3,4,5,6	P
Maximum Conducted Output Power	Mode1,2,3,4,5,6	P
Emissions in frequency bands (below 1GHz)	Mode1,2,3,4,5,6	P
Emissions in frequency bands (above 1GHz)	Mode1,2,3,4,5,6	P
Note: P: Pass N: N/A, not applicable		

1.8. Description of Test Facility

The test facility is recognized, certified, or accredited by the following organizations:

FCC-Registration No.:434132
Shenzhen Anbotek Compliance Laboratory Limited, EMC Laboratory has been registered and fully described in a report filed with the (FCC) Federal Communications Commission. The acceptance letter from the FCC is maintained in our files. Registration No. 434132.

ISED-Registration No.: 8058A
Shenzhen Anbotek Compliance Laboratory Limited, EMC Laboratory has been registered and fully described in a report filed with the (ISED) Innovation, Science and Economic Development Canada. The acceptance letter from the ISED is maintained in our files. Registration 8058A.

Test Location
Shenzhen Anbotek Compliance Laboratory Limited.
1/F, Building D, Sogood Science and Technology Park, Sanwei community, Hangcheng Street, Bao'an District, Shenzhen, Guangdong, China.

1.9. Disclaimer

1. The test report is invalid if not marked with the signatures of the persons responsible for preparing and approving the test report.
2. The test report is invalid if there is any evidence and/or falsification.
3. The results documented in this report apply only to the tested sample, under the conditions and modes of operation as described herein.
4. This document may not be altered or revised in any way unless done so by Anbotek and all revisions are duly noted in the revisions section.
5. Content of the test report, in part or in full, cannot be used for publicity and/or promotional purposes without prior written approval from the laboratory.
6. The authenticity of the information provided by the customer is the responsibility of the customer and the laboratory is not responsible for its authenticity.

The laboratory is only responsible for the data released by the laboratory, except for the part provided by the applicant.

1.10. Test Equipment List

Conducted Emission at AC power line						
Item	Equipment	Manufacturer	Model No.	Serial No.	Last Cal.	Cal.Due Date
1	L.I.S.N. Artificial Mains Network	Rohde & Schwarz	ENV216	100055	2024-01-18	2025-01-17
2	Three Phase V-type Artificial Power Network	CYBERTEK	EM5040DT	E215040DT001	2024-01-17	2025-01-16
3	Software Name EZ-EMC	Farad Technology	ANB-03A	N/A	/	/
4	EMI Test Receiver	Rohde & Schwarz	ESPI3	100926	2023-10-12	2024-10-11

Emissions in frequency bands (above 1GHz)						
Item	Equipment	Manufacturer	Model No.	Serial No.	Last Cal.	Cal.Due Date
1	EMI Test Receiver	Rohde & Schwarz	ESR26	101481	2024-01-23	2025-01-22
2	EMI Preamplifier	SKET Electronic	LNPA-0118G-45	SKET-PA-002	2024-01-17	2025-01-16
3	Double Ridged Horn Antenna	SCHWARZBECK	BBHA 9120D	02555	2022-10-16	2025-10-15
4	EMI Test Software EZ-EMC	SHURPLE	N/A	N/A	/	/
5	Horn Antenna	A-INFO	LB-180400-KF	J211060628	2023-10-12	2024-10-11
6	Spectrum Analyzer	Rohde & Schwarz	FSV40-N	101792	2023-05-26	2024-05-25
7	Amplifier	Talent Microwave	TLLA18G40G-50-30	23022802	2023-05-25	2024-05-24

Emissions in frequency bands (below 1GHz)						
Item	Equipment	Manufacturer	Model No.	Serial No.	Last Cal.	Cal.Due Date
1	EMI Test Receiver	Rohde & Schwarz	ESR26	101481	2024-01-23	2025-01-22
2	Pre-amplifier	SONOMA	310N	186860	2024-01-17	2025-01-16
3	Bilog Broadband Antenna	Schwarzbeck	VULB9163	345	2022-10-23	2025-10-22
4	Loop Antenna (9K-30M)	Schwarzbeck	FMZB1519B	00053	2023-10-12	2024-10-11
5	EMI Test Software EZ-EMC	SHURPLE	N/A	N/A	/	/

2. Antenna requirement

Test Requirement:	Refer to 47 CFR Part 15.203, an intentional radiator shall be designed to ensure that no antenna other than that furnished by the responsible party shall be used with the device. The use of a permanently attached antenna or of an antenna that uses a unique coupling to the intentional radiator shall be considered sufficient to comply with the provisions of this section.

2.1. Conclusion

The antenna is a **FPC antenna** which permanently attached, and the best case gain of the antenna is ANT 1: 1.51dBi;ANT 2: 3.1dBi. It complies with the standard requirement.

3. Conducted Emission at AC power line

Test Requirement:	Refer to 47 CFR 15.207(a), Except as shown in paragraphs (b)and (c)of this section, for an intentional radiator that is designed to be connected to the public utility (AC) power line, the radio frequency voltage that is conducted back onto the AC power line on any frequency or frequencies, within the band 150 kHz to 30 MHz, shall not exceed the limits in the following table, as measured using a 50 μH/50 ohms line impedance stabilization network (LISN).
Test Limit:	

Frequency of emission (MHz)	Conducted limit (dBμV)	
	Quasi-peak	Average
0.15-0.5	66 to 56*	56 to 46*
0.5-5	56	46
5-30	60	50

*Decreases with the logarithm of the frequency.

Test Method:	ANSI C63.10-2020 section 6.2
Procedure:	Refer to ANSI C63.10-2020 section 6.2, standard test method for ac power-line conducted emissions from unlicensed wireless devices

3.1. EUT Operation

Operating Environment:	
Test mode:	1: 802.11b mode: Keep the EUT in 802.11b transmitting mode. 2: 802.11g mode: Keep the EUT in 802.11g transmitting mode. 3: 802.11n(HT20) mode: Keep the EUT in 802.11n(HT20) transmitting mode. 4: 802.11n(HT40) mode: Keep the EUT in 802.11n(HT40) transmitting mode. 5: 802.11ax(HEW20): Keep the EUT in 802.11ax(HEW20) transmitting mode. 6: 802.11ax(HEW40): Keep the EUT in 802.11ax(HEW40) transmitting mode.

3.2. Test Setup

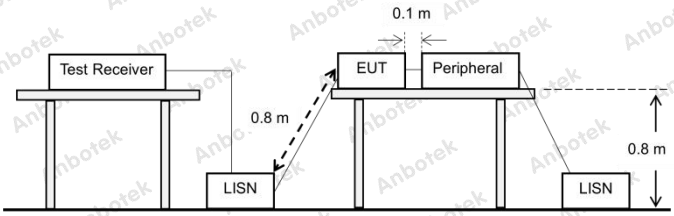

3.3. Test Data

Temperature:	22.5 °C	Humidity:	51.9 %	Atmospheric Pressure:	102 kPa

TM5 / Line: Line / Band: 2400-2483.5 MHz / BW: 20 / CH: M/ ANT1

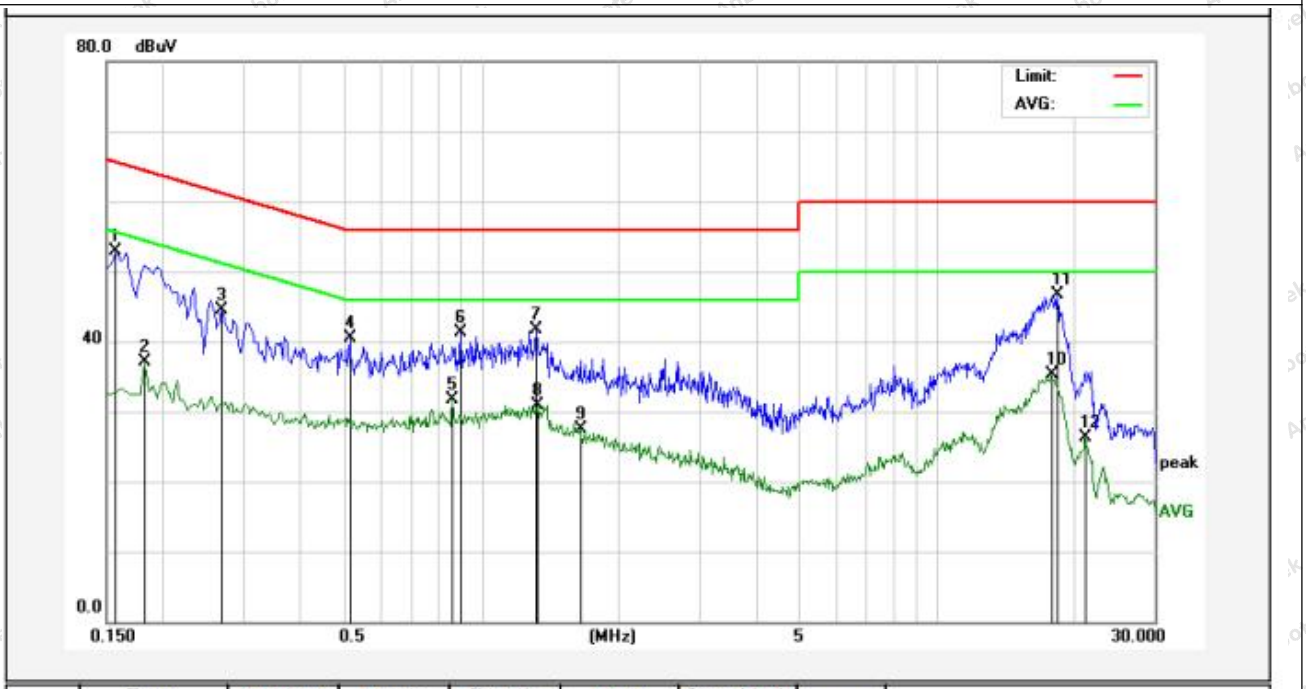

No.	Freq. (MHz)	Reading (dBuV)	Factor (dB)	Result (dBuV)	Limit (dBuV)	Over Limit (dB)	Detector	Remark
1	0.1580	35.01	17.83	52.84	65.56	-12.72	QP	
2	0.1819	19.27	17.82	37.09	54.39	-17.30	AVG	
3	0.2700	26.63	17.84	44.47	61.12	-16.65	QP	
4	0.5140	22.56	17.86	40.42	56.00	-15.58	QP	
5	0.8660	13.75	17.86	31.61	46.00	-14.39	AVG	
6	0.9020	23.37	17.86	41.23	56.00	-14.77	QP	
7	1.3220	23.89	17.86	41.75	56.00	-14.25	QP	
8	1.3300	13.11	17.86	30.97	46.00	-15.03	AVG	
9	1.6500	9.72	17.85	27.57	46.00	-18.43	AVG	
10	17.8100	17.01	18.23	35.24	50.00	-14.76	AVG	
11	18.3779	28.44	18.24	46.68	60.00	-13.32	QP	
12	21.0860	7.98	18.32	26.30	50.00	-23.70	AVG	

Temperature:	22.5 °C	Humidity:	51.9 %	Atmospheric Pressure:	102 kPa

TM5 / Line: Neutral / Band: 2400-2483.5 MHz / BW: 20 / CH: M/ ANT1

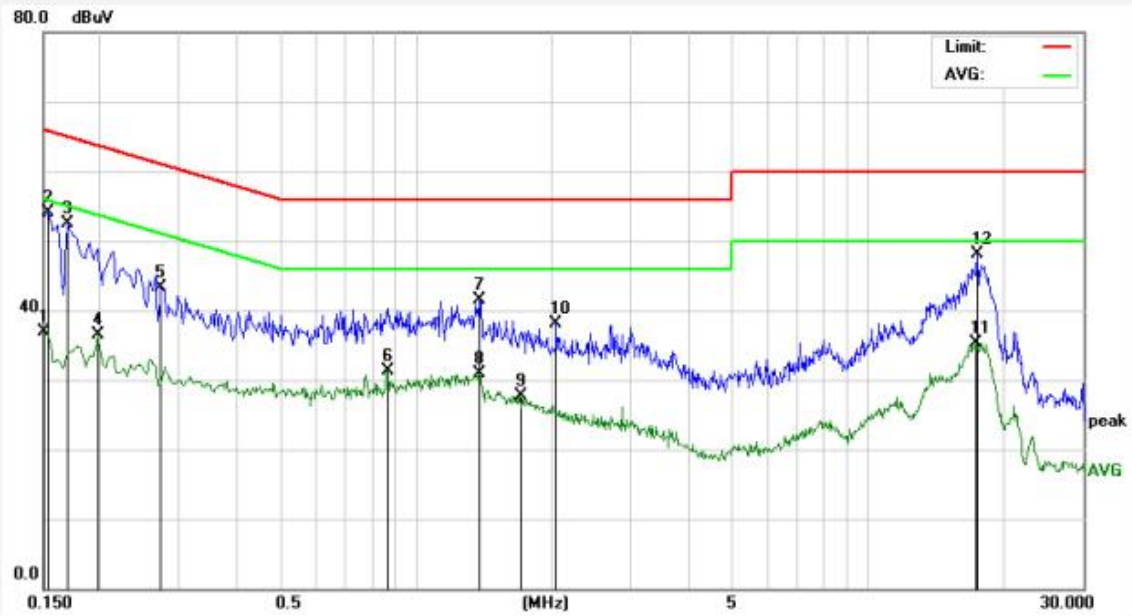

No.	Freq. (MHz)	Reading (dBuV)	Factor (dB)	Result (dBuV)	Limit (dBuV)	Over Limit (dB)	Detector	Remark
1	0.1499	19.10	17.82	36.92	56.00	-19.08	AVG	
2	0.1539	36.34	17.83	54.17	65.78	-11.61	QP	
3	0.1700	34.67	17.83	52.50	64.96	-12.46	QP	
4	0.1980	18.61	17.82	36.43	53.69	-17.26	AVG	
5	0.2740	25.43	17.84	43.27	60.99	-17.72	QP	
6	0.8660	13.48	17.86	31.34	46.00	-14.66	AVG	
7	1.3820	23.56	17.86	41.42	56.00	-14.58	QP	
8	1.3820	12.99	17.86	30.85	46.00	-15.15	AVG	
9	1.7020	9.77	17.85	27.62	46.00	-18.38	AVG	
10	2.0540	20.25	17.85	38.10	56.00	-17.90	QP	
11	17.3339	17.17	18.21	35.38	50.00	-14.62	AVG	
12	17.5099	29.84	18.22	48.06	60.00	-11.94	QP	

Note:Only record the worst data in the report.

4. Maximum Conducted Output Power

Test Requirement:	47 CFR 15.247(b)(3)
Test Limit:	Refer to 47 CFR 15.247(b)(3), For systems using digital modulation in the 902-928 MHz, 2400-2483.5 MHz, and 5725-5850 MHz bands: 1 Watt. As an alternative to a peak power measurement, compliance with the one Watt limit can be based on a measurement of the maximum conducted output power. Maximum Conducted Output Power is defined as the total transmit power delivered to all antennas and antenna elements averaged across all symbols in the signaling alphabet when the transmitter is operating at its maximum power control level. Power must be summed across all antennas and antenna elements. The average must not include any time intervals during which the transmitter is off or is transmitting at a reduced power level. If multiple modes of operation are possible (e.g., alternative modulation methods), the maximum conducted output power is the highest total transmit power occurring in any mode.
Test Method:	ANSI C63.10-2020 section 11.9.1 KDB 558074 D01 15.247 Meas Guidance v05r02
Procedure:	ANSI C63.10-2020, section 11.9.1 Maximum peak conducted output power

4.1. EUT Operation

Operating Environment:	
Test mode:	1: 802.11b mode: Keep the EUT in 802.11b transmitting mode. 2: 802.11g mode: Keep the EUT in 802.11g transmitting mode. 3: 802.11n(HT20) mode: Keep the EUT in 802.11n(HT20) transmitting mode. 4: 802.11n(HT40) mode: Keep the EUT in 802.11n(HT40) transmitting mode. 5: 802.11ax(HEW20): Keep the EUT in 802.11ax(HEW20) transmitting mode. 6: 802.11ax(HEW40): Keep the EUT in 802.11ax(HEW40) transmitting mode.

4.2. Test Setup

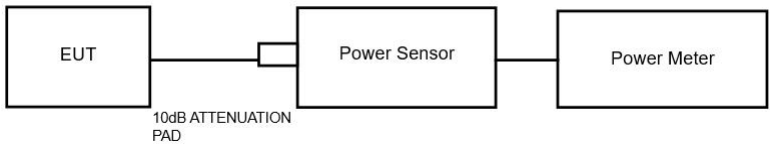

4.3. Test Data

Temperature:	25.6 °C	Humidity:	49 %	Atmospheric Pressure:	101 kPa

TestMode	Antenna	Frequency[MHz]	Peak Power[dBm]	Conducted Limit[dBm]
11B	Ant1	2412	19.18	≤30.00
	Ant2	2412	17.68	≤30.00
	Ant1	2437	19.45	≤30.00
	Ant2	2437	18.91	≤30.00
	Ant1	2462	18.62	≤30.00
	Ant2	2462	16.12	≤30.00
11G	Ant1	2412	19.53	≤30.00
	Ant2	2412	17.69	≤30.00
	Ant1	2437	19.55	≤30.00
	Ant2	2437	18.67	≤30.00
	Ant1	2462	18.91	≤30.00
	Ant2	2462	16.32	≤30.00
11N20SISO	Ant1	2412	19.30	≤30.00
	Ant2	2412	17.72	≤30.00
	Ant1	2437	19.62	≤30.00
	Ant2	2437	18.53	≤30.00
	Ant1	2462	18.99	≤30.00
	Ant2	2462	16.29	≤30.00
11N40SISO	Ant1	2422	19.63	≤30.00
	Ant2	2422	18.34	≤30.00
	Ant1	2437	19.64	≤30.00
	Ant2	2437	18.98	≤30.00
	Ant1	2452	19.36	≤30.00
	Ant2	2452	16.99	≤30.00
11AX20SISO	Ant1	2412	19.76	≤30.00
	Ant2	2412	18.21	≤30.00
	Ant1	2437	20.09	≤30.00
	Ant2	2437	19.11	≤30.00
	Ant1	2462	19.41	≤30.00
	Ant2	2462	16.79	≤30.00
11AX40SISO	Ant1	2422	20.01	≤30.00
	Ant2	2422	18.60	≤30.00
	Ant1	2437	20.00	≤30.00
	Ant2	2437	19.23	≤30.00
	Ant1	2452	19.64	≤30.00
	Ant2	2452	17.23	≤30.00

Note: For pre-scan, the result is equal to original, so the original data is referenced.

5. Emissions in frequency bands (below 1GHz)

<table>
<tr><td>Test Requirement:</td><td>Refer to 47 CFR 15.247(d), In addition, radiated emissions which fall in the restricted bands, as defined in § 15.205(a), must also comply with the radiated emission limits specified in § 15.209(a)(see § 15.205(c)).`</td></tr>
<tr><td>Test Limit:</td><td>
<table>
<tr><th>Frequency (MHz)</th><th>Field strength (microvolts/meter)</th><th>Measurement distance (meters)</th></tr>
<tr><td>0.009-0.490</td><td>2400/F(kHz)</td><td>300</td></tr>
<tr><td>0.490-1.705</td><td>24000/F(kHz)</td><td>30</td></tr>
<tr><td>1.705-30.0</td><td>30</td><td>30</td></tr>
<tr><td>30-88</td><td>100 **</td><td>3</td></tr>
<tr><td>88-216</td><td>150 **</td><td>3</td></tr>
<tr><td>216-960</td><td>200 **</td><td>3</td></tr>
<tr><td>Above 960</td><td>500</td><td>3</td></tr>
</table>
** Except as provided in paragraph (g), fundamental emissions from intentional radiators operating under this section shall not be located in the frequency bands 54-72 MHz, 76-88 MHz, 174-216 MHz or 470-806 MHz. However, operation within these frequency bands is permitted under other sections of this part, e.g., §§ 15.231 and 15.241.
In the emission table above, the tighter limit applies at the band edges.
The emission limits shown in the above table are based on measurements employing a CISPR quasi-peak detector except for the frequency bands 9–90 kHz, 110–490 kHz and above 1000 MHz. Radiated emission limits in these three bands are based on measurements employing an average detector.
</td></tr>
<tr><td>Test Method:</td><td>ANSI C63.10-2020 section 6.6.4
KDB 558074 D01 15.247 Meas Guidance v05r02</td></tr>
<tr><td>Procedure:</td><td>ANSI C63.10-2020 section 6.6.4</td></tr>
</table>

5.1. EUT Operation

<table>
<tr><td colspan="2">Operating Environment:</td></tr>
<tr><td>Test mode:</td><td>1: 802.11b mode: Keep the EUT in 802.11b transmitting mode.
2: 802.11g mode: Keep the EUT in 802.11g transmitting mode.
3: 802.11n(HT20) mode: Keep the EUT in 802.11n(HT20) transmitting mode.
4: 802.11n(HT40) mode: Keep the EUT in 802.11n(HT40) transmitting mode.
5: 802.11ax(HEW20): Keep the EUT in 802.11ax(HEW20) transmitting mode.
6: 802.11ax(HEW40): Keep the EUT in 802.11ax(HEW40) transmitting mode.</td></tr>
</table>

5.2. Test Setup

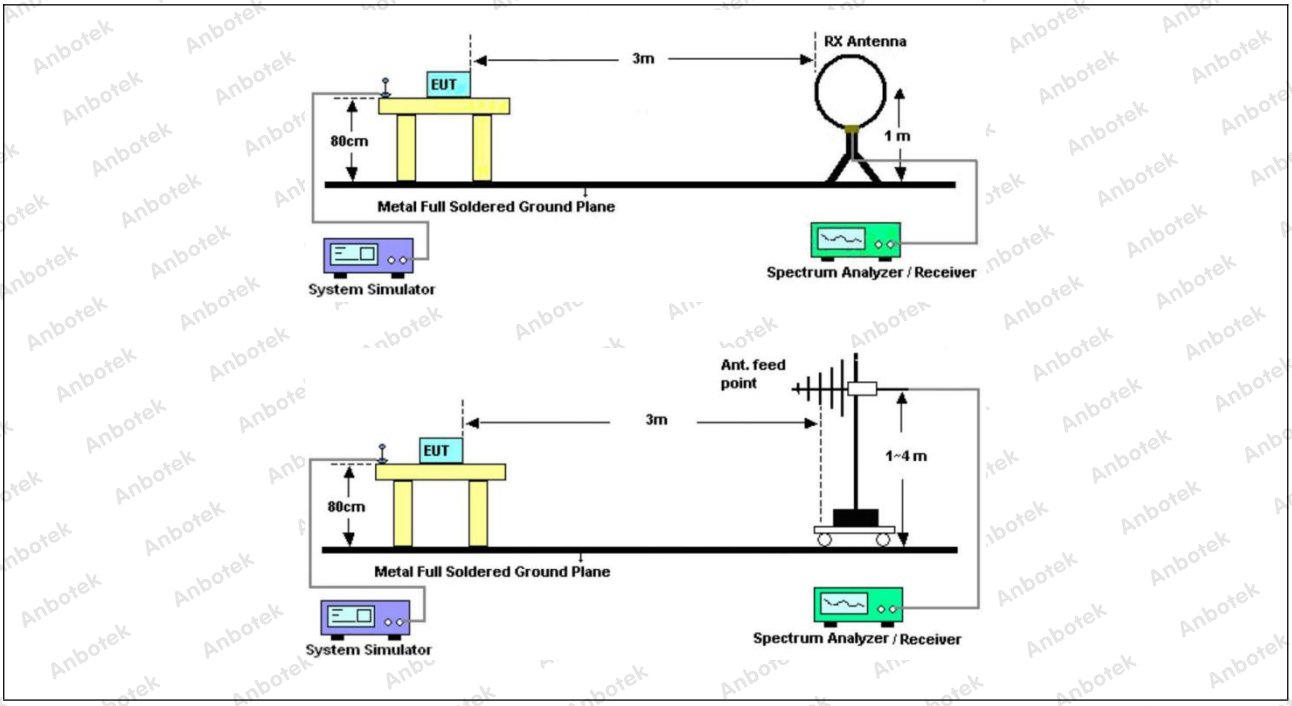

5.3. Test Data

Remark: The test results of 9kHz-30MHz was attenuated more than 20dB below the permissible limits, so the results don't record in the report.

Temperature:	25.6 °C	Humidity:	49 %	Atmospheric Pressure:	101 kPa

TM5 / Polarization: Horizontal / Band: 2400-2483.5 MHz / BW: 20 / CH: M / ANT1

No.	Freq. (MHz)	Reading (dBuV)	Factor (dB/m)	Result (dBuV/m)	Limit (dBuV/m)	Over Limit (dB)	Detector	Height (cm)	degree (deg)	Remark
1	55.6094	41.02	-17.61	23.41	40.00	-16.59	QP			
2	72.8466	50.54	-22.10	28.44	40.00	-11.56	QP			
3	135.9822	52.89	-22.84	30.05	43.50	-13.45	QP			
4	240.8304	51.87	-21.65	30.22	46.00	-15.78	QP			
5	649.6597	35.23	-10.67	24.56	46.00	-21.44	QP			
6	962.1623	34.27	-5.44	28.83	54.00	-25.17	QP			

Temperature:	25.6 °C	Humidity:	49 %	Atmospheric Pressure:	101 kPa

TM5 / Polarization: Vertical / Band: 2400-2483.5 MHz / BW: 20 / CH: M / ANT1

No.	Freq. (MHz)	Reading (dBuV)	Factor (dB/m)	Result (dBuV/m)	Limit (dBuV/m)	Over Limit (dB)	Detector	Height (cm)	degree (deg)	Remark
1	42.3022	43.87	-14.79	29.08	40.00	-10.92	QP			
2	71.8320	53.44	-19.94	33.50	40.00	-6.50	QP			
3	126.7723	58.67	-20.98	37.69	43.50	-5.81	QP			
4	140.8351	58.15	-22.17	35.98	43.50	-7.52	QP			
5	233.3487	44.09	-18.51	25.58	46.00	-20.42	QP			
6	948.7610	33.63	-5.65	27.98	46.00	-18.02	QP			

Note:Only record the worst data in the report.

6. Emissions in frequency bands (above 1GHz)

<table>
<tr><td>Test Requirement:</td><td colspan="3">In addition, radiated emissions which fall in the restricted bands, as defined in § 15.205(a), must also comply with the radiated emission limits specified in § 15.209(a)(see § 15.205(c)).`</td></tr>
<tr><td>Test Limit:</td><td colspan="3"><table>
<tr><td>Frequency (MHz)</td><td>Field strength (microvolts/meter)</td><td>Measurement distance (meters)</td></tr>
<tr><td>0.009-0.490</td><td>2400/F(kHz)</td><td>300</td></tr>
<tr><td>0.490-1.705</td><td>24000/F(kHz)</td><td>30</td></tr>
<tr><td>1.705-30.0</td><td>30</td><td>30</td></tr>
<tr><td>30-88</td><td>100 **</td><td>3</td></tr>
<tr><td>88-216</td><td>150 **</td><td>3</td></tr>
<tr><td>216-960</td><td>200 **</td><td>3</td></tr>
<tr><td>Above 960</td><td>500</td><td>3</td></tr>
</table>
** Except as provided in paragraph (g), fundamental emissions from intentional radiators operating under this section shall not be located in the frequency bands 54-72 MHz, 76-88 MHz, 174-216 MHz or 470-806 MHz. However, operation within these frequency bands is permitted under other sections of this part, e.g., §§ 15.231 and 15.241.
In the emission table above, the tighter limit applies at the band edges.
The emission limits shown in the above table are based on measurements employing a CISPR quasi-peak detector except for the frequency bands 9–90 kHz, 110–490 kHz and above 1000 MHz. Radiated emission limits in these three bands are based on measurements employing an average detector.</td></tr>
<tr><td>Test Method:</td><td colspan="3">ANSI C63.10-2020 section 6.6.4
KDB 558074 D01 15.247 Meas Guidance v05r02</td></tr>
<tr><td>Procedure:</td><td colspan="3">ANSI C63.10-2020 section 6.6.4</td></tr>
</table>

6.1. EUT Operation

Operating Environment:	
Test mode:	1: 802.11b mode: Keep the EUT in 802.11b transmitting mode. 2: 802.11g mode: Keep the EUT in 802.11g transmitting mode. 3: 802.11n(HT20) mode: Keep the EUT in 802.11n(HT20) transmitting mode. 4: 802.11n(HT40) mode: Keep the EUT in 802.11n(HT40) transmitting mode. 5: 802.11ax(HEW20): Keep the EUT in 802.11ax(HEW20) transmitting mode. 6: 802.11ax(HEW40): Keep the EUT in 802.11ax(HEW40) transmitting mode.

6.2. Test Setup

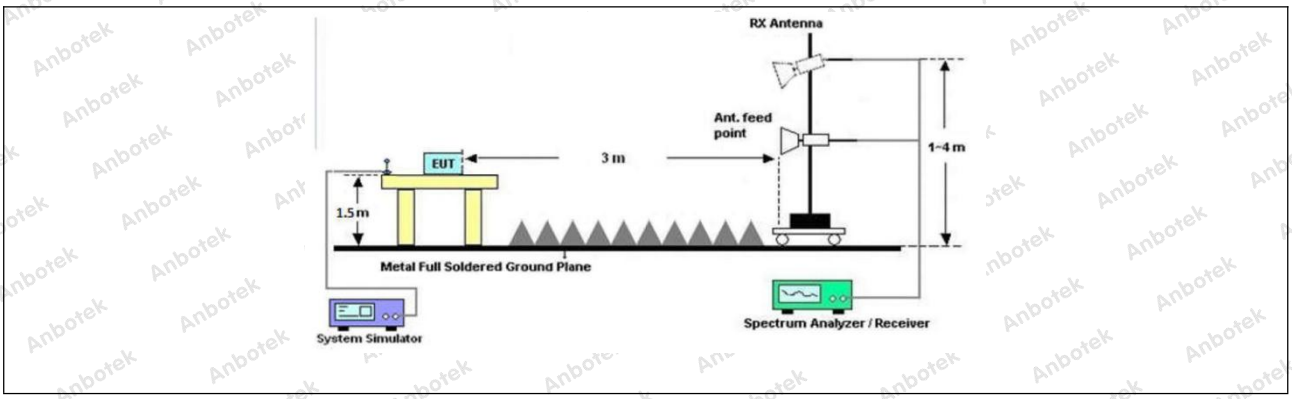

6.3. Test Data

Temperature:	25.6 °C	Humidity:	49 %	Atmospheric Pressure:	101 kPa

TM5 / CH: L / ANT1						
Peak value:						
Frequency (MHz)	Reading (dBuV)	Factor (dB/m)	Result (dBuV/m)	Limit Line (dBuV/m)	Over Limit (dB)	polarization
4824.00	27.48	15.31	42.79	74.00	-31.21	Vertical
7236.00	28.19	18.06	46.25	74.00	-27.75	Vertical
9648.00	29.06	23.77	52.83	74.00	-21.17	Vertical
12060.00	*			74.00		Vertical
14472.00	*			74.00		Vertical
4824.00	27.05	15.31	42.36	74.00	-31.64	Horizontal
7236.00	29.69	18.06	47.75	74.00	-26.25	Horizontal
9648.00	28.80	23.77	52.57	74.00	-21.43	Horizontal
12060.00	*			74.00		Horizontal
14472.00	*			74.00		Horizontal
Average value:						
Frequency (MHz)	Reading (dBuV)	Factor (dB/m)	Result (dBuV/m)	Limit Line (dBuV/m)	Over Limit (dB)	polarization
4824.00	18.56	15.31	33.87	54.00	-20.13	Vertical
7236.00	19.06	18.06	37.12	54.00	-16.88	Vertical
9648.00	19.41	23.77	43.18	54.00	-10.82	Vertical
12060.00	*			54.00		Vertical
14472.00	*			54.00		Vertical
4824.00	18.58	15.31	33.89	54.00	-20.11	Horizontal
7236.00	20.93	18.06	38.99	54.00	-15.01	Horizontal
9648.00	19.55	23.77	43.32	54.00	-10.68	Horizontal
12060.00	*			54.00		Horizontal
14472.00	*			54.00		Horizontal

TM5 / CH: M / ANT1						
Peak value:						
Frequency (MHz)	Reading (dBuV)	Factor (dB/m)	Result (dBuV/m)	Limit Line (dBuV/m)	Over Limit (dB)	polarization
4874.00	27.53	15.41	42.94	74.00	-31.06	Vertical
7311.00	28.25	18.01	46.26	74.00	-27.74	Vertical
9748.00	29.08	23.79	52.87	74.00	-21.13	Vertical
12185.00	*			74.00		Vertical
14622.00	*			74.00		Vertical
4874.00	27.90	15.41	43.31	74.00	-30.69	Horizontal
7311.00	29.31	18.01	47.32	74.00	-26.68	Horizontal
9748.00	29.12	23.79	52.91	74.00	-21.09	Horizontal
12185.00	*			74.00		Horizontal
14622.00	*			74.00		Horizontal
Average value:						
Frequency (MHz)	Reading (dBuV)	Factor (dB/m)	Result (dBuV/m)	Limit Line (dBuV/m)	Over Limit (dB)	polarization
4874.00	18.37	15.41	33.78	54.00	-20.22	Vertical
7311.00	19.57	18.01	37.58	54.00	-16.42	Vertical
9748.00	20.33	23.79	44.12	54.00	-9.88	Vertical
12185.00	*			54.00		Vertical
14622.00	*			54.00		Vertical
4874.00	20.01	15.41	35.42	54.00	-18.58	Horizontal
7311.00	20.40	18.01	38.41	54.00	-15.59	Horizontal
9748.00	18.84	23.79	42.63	54.00	-11.37	Horizontal
12185.00	*			54.00		Horizontal
14622.00	*			54.00		Horizontal

TM5 / CH: H / ANT1						
Peak value:						
Frequency (MHz)	Reading (dBuV)	Factor (dB/m)	Result (dBuV/m)	Limit Line (dBuV/m)	Over Limit (dB)	polarization
4924.00	28.09	15.51	43.60	74.00	-30.40	Vertical
7386.00	28.95	17.97	46.92	74.00	-27.08	Vertical
9848.00	29.89	23.82	53.71	74.00	-20.29	Vertical
12310.00	*			74.00		Vertical
14772.00	*			74.00		Vertical
4924.00	27.29	15.51	42.80	74.00	-31.20	Horizontal
7386.00	28.27	17.97	46.24	74.00	-27.76	Horizontal
9848.00	28.72	23.82	52.54	74.00	-21.46	Horizontal
12310.00	*			74.00		Horizontal
14772.00	*			74.00		Horizontal
Average value:						
Frequency (MHz)	Reading (dBuV)	Factor (dB/m)	Result (dBuV/m)	Limit (dBuV/m)	Over Limit (dB)	polarization
4924.00	18.00	15.51	33.51	54.00	-20.49	Vertical
7386.00	18.87	17.97	36.84	54.00	-17.16	Vertical
9848.00	19.89	23.82	43.71	54.00	-10.29	Vertical
12310.00	*			54.00		Vertical
14772.00	*			54.00		Vertical
4924.00	17.65	15.51	33.16	54.00	-20.84	Horizontal
7386.00	18.74	17.97	36.71	54.00	-17.29	Horizontal
9848.00	18.33	23.82	42.15	54.00	-11.85	Horizontal
12310.00	*			54.00		Horizontal
14772.00	*			54.00		Horizontal

Remark:

1. Result =Reading + Factor
2. "*" means the test results were attenuated more than 20dB below the permissible limits, so the results don't record in the report.
3. Only the worst case is recorded in the report.

APPENDIX I -- TEST SETUP PHOTOGRAPH

Please refer to separated files Appendix I -- Test Setup Photograph_RF

APPENDIX II -- EXTERNAL PHOTOGRAPH

Please refer to separated files Appendix II -- External Photograph

APPENDIX III -- INTERNAL PHOTOGRAPH

Please refer to separated files Appendix III -- Internal Photograph

---------- End of Report ----------