CTC Laboratories, Inc.

1-2/F., Building 2, Jiaquan Building, Guanlan High-Tech Park, Shenzhen, Guangdong, China
Tel: +86-755- 27521059 Fax: +86-755- 27521011 Http://www.sz-ctc.org.cn

TEST REPORT

Report No……:	**CTC20231075E05**
FCC ID……:	**XUJS4001A**
Applicant .....:	**Launch Tech Co., Ltd.**
Address…….....:	Launch Industrial Park, North of Wuhe Rd, Banxuegang, Longgang, Shenzhen, Guangdong, P.R. China
Manufacturer.....:	Launch Tech Co., Ltd.
Address.....:	Launch Industrial Park, North of Wuhe Rd, Banxuegang, Longgang, Shenzhen, Guangdong, P.R. China
Product Name .....:	**Remote Diagnosis Interface**
Trade Mark .....:	LAUNCH
Model/Type reference.....:	S4001A
Listed Model(s) .....:	/
Standard .....:	**FCC Part 15, Subpart E 15. 407**
Date of receipt of test sample…:	May. 09, 2023
Date of testing……..:	May. 10, 2023 ~ May. 31, 2023
Date of issue……....:	Jun. 01, 2023
Result……:	**PASS**

Compiled by: (Printed name+signature)	Terry Su	Terry Su
Supervised by: (Printed name+signature)	Eric Zhang	Eric Zhang
Approved by: (Printed name+signature)	Totti Zhao	Totti Zhao

Testing Laboratory Name .....:	**CTC Laboratories, Inc.**
Address.....:	1-2/F., Building 2, Jiaquan Building, Guanlan High-Tech Park, Shenzhen, Guangdong, China

This test report may be duplicated completely for legal use with the approval of the applicant. It should not be reproduced except in full, without the written approval of our laboratory. The client should not use it to claim product endorsement by CTC. The test results in the report only apply to the tested sample. The test report shall be invalid without all the signatures of testing engineers, reviewer and approver. Any objections must be raised to CTC within 15 days since the date when the report is received. It will not be taken into consideration beyond this limit. The test report merely correspond to the test sample.

Table of Contents Page

1. TEST SUMMARY 3

1.1. TEST STANDARDS 3
1.2. REPORT VERSION 3
1.3. TEST DESCRIPTION 4
1.4. TEST FACILITY 5
1.5. MEASUREMENT UNCERTAINTY 5
1.6. ENVIRONMENTAL CONDITIONS 6

2. GENERAL INFORMATION 7

2.1. CLIENT INFORMATION 7
2.2. GENERAL DESCRIPTION OF EUT 7
2.3. ACCESSORY EQUIPMENT INFORMATION 8
2.4. OPERATION STATE 9
2.5. MEASUREMENT INSTRUMENTS LIST 10

3. TEST ITEM AND RESULTS 12

3.1. CONDUCTED EMISSION 12
3.2. RADIATED EMISSION 15
3.3. BAND EDGE EMISSIONS 22
3.4. BANDWIDTH TEST 25
3.5. OUTPUT POWER TEST 27
3.6. POWER SPECTRAL DENSITY TEST 29
3.7. FREQUENCY STABILITY MEASUREMENT 31
3.8. ANTENNA REQUIREMENT 32
3.9. DYNAMIC FREQUENCY SELECTION(DFS) 33

1. TEST SUMMARY

1.1. Test Standards

The tests were performed according to following standards:

FCC Part 15, Subpart E(15.407) — for 802.11a/n/ac, the test procedure follows the FCC KDB 789033 D02 General UNII Test Procedures New Rules V02r01.
RSS-247 Issue 2 February 2017 — Digital Transmission Systems (DTSs), Frequency Hopping Systems (FHSs) and Licence-Exempt Local Area Network (LE-LAN) Devices
ANSI C63.10-2013: American National Standard for Testing Unlicensed Wireless Devices.
RSS-Gen Issue 5: General Requirements for Compliance of Radio Apparatus.

1.2. Report version

Revised No.	Date of issue	Description
01	Jun. 01, 2023	Original

1.3. Test Description

FCC Part 15 Subpart E (15.407) / RSS-247 Issue 2 February 2017				
Test Item	Test require		Result	Test Engineer
	FCC	IC		
Antenna Requirement	15.203	/	Pass	Alicia Liu
Conducted Emission	15.207	RSS-Gen 8.8	Pass	Curry Ye
Band Edge Emissions	15.407(b)	RSS-247 6.2.1.2 RSS-247 6.2.2.2 RSS-247 6.2.4.2	Pass	Alicia Liu
26dB Bandwidth & 99% Bandwidth	15.407(a) (5)	RSS-247 6.2.1.2	Pass	Alicia Liu
6dB Bandwidth (only for UNII-3)	15.407(e)	RSS-247 6.2.4.1	Pass	Alicia Liu
Peak Output Power	15.407(a)	RSS-247 6.2.1.1 RSS-247 6.2.4.1	Pass	Alicia Liu
Power Spectral Density	15.407(a)	RSS-247 6.2	Pass	Alicia Liu
Transmitter Radiated Spurious Emission	15.407(b) &15.209	RSS-Gen 8.9 RSS-247 6.2.1.2 RSS-247 6.2.4.2	Pass	Alicia Liu
Frequency Stability	15.407(g)	/	Pass	Alicia Liu
Dynamic Frequency Selection (DFS)	15.407(h)	RSS-247 6.3	N/A	N/A

Note: “N/A” is not applicable.

The measurement uncertainty is not included in the test result.

1.4. Test Facility

CTC Laboratories, Inc.

Add: 1-2/F., Building 2, Jiaquan Building, Guanlan High-Tech Park, Shenzhen, Guangdong, China

Laboratory accreditation

The test facility is recognized, certified, or accredited by the following organizations:

CNAS-Lab Code: L5365

CTC Laboratories, Inc. has been assessed and proved to be in compliance with CNAS-CL01 Accreditation. Criteria for Testing and Calibration Laboratories (identical to ISO/IEC17025:2017 General Requirements) f or the Competence of Testing and Calibration Laboratories.

A2LA-Lab Cert. No.: 4340.01

CTC Laboratories, Inc. EMC Laboratory has been accredited by A2LA for technical competence in the field of electrical testing, and proved to be in compliance with ISO/IEC 17025:2017 General Requirements for the Competence of Testing and Calibration Laboratories and any additional program requirements in the identified field of testing.

Industry Canada (Registration No.: 9783A, CAB Identifier: CN0029)

CTC Laboratories, Inc. EMC Laboratory has been registered by Certification and Engineer Bureau of Indus try Canada for the performance of with Registration NO.: 9783A on Jan, 2016.

FCC (Registration No.: 951311, Designation Number CN1208)

CTC Laboratories, Inc. EMC Laboratory has been registered and fully described in a report filed with the (FCC) Federal Communications Commission. The acceptance letter from the FCC is maintained inour files. Registration 951311, Aug 26, 2017.

1.5. Measurement Uncertainty

The data and results referenced in this document are true and accurate. The reader is cautioned that there may be errors within the calibration limits of the equipment and facilities. The measurement uncertainty was calculated for all measurements listed in this test report acc. to TR-100028-01" Electromagnetic compatibility and Radio spectrum Matters (ERM); Uncertainties in the measurement of mobile radio equipment characteristics; Part 1" and TR-100028-02 "Electromagnetic compatibility and Radio spectrum Matters (ERM); Uncertainties in the measurement of mobile radio equipment characteristics; Part 2 " and is documented in the CTC Laboratories, Inc. quality system acc. to DIN EN ISO/IEC 17025. Furthermore, component and process variability of devices similar to that tested may result in additional deviation. The manufacturer has the sole responsibility of continued compliance of the device.

Below is the best measurement capability for CTC Laboratories, Inc.

Test Items	Measurement Uncertainty	Notes
Transmitter power conducted	0.42 dB	(1)
Transmitter power Radiated	2.14 dB	(1)
Conducted spurious emissions 9kHz~40GHz	1.60 dB	(1)
Radiated spurious emissions 9kHz~40GHz	2.20 dB	(1)
Conducted Emissions 9kHz~30MHz	3.08 dB	(1)
Radiated Emissions 30~1000MHz	4.51 dB	(1)
Radiated Emissions 1~18GHz	5.84 dB	(1)
Radiated Emissions 18~40GHz	6.12 dB	(1)
Occupied Bandwidth	---------	(1)

Note (1): This uncertainty represents an expanded uncertainty expressed at approximately the 95% confidence level using a coverage factor of k=1.96.

1.6. Environmental conditions

Normal Condition	Temperature	22 °C ~ 28°C
	Relative humidity	50% ~ 65%
	Air Pressure	101 kPa
	Voltage	The equipment shall be the nominal voltage for which the equipment was designed.
Extreme Condition	Temperature	Measurements shall be made over the extremes of the operating temperature range as declared by the manufacturer
	Voltage	Measurements shall be made over the extremes of the operating voltage range as declared by the manufacturer

Normal Condition	T_N=Normal Temperature	22 °C ~ 28°C
Extreme Condition	T_L=Lower Temperature	0 °C
	T_H=Higher Temperature	50 °C

2. GENERAL INFORMATION

2.1. Client Information

Applicant:	Launch Tech Co., Ltd.
Address:	Launch Industrial Park, North of Wuhe Rd, Banxuegang, Longgang, Shenzhen, Guangdong, P.R. China
Manufacturer:	Launch Tech Co., Ltd.
Address:	Launch Industrial Park, North of Wuhe Rd, Banxuegang, Longgang, Shenzhen, Guangdong, P.R. China

2.2. General Description of EUT

Product Name:	Remote Diagnosis Interface				
Trade Mark:	LAUNCH				
Model/Type reference:	S4001A				
Listed Model(s):	/				
Power supply:	9 - 36Vdc Voltage supplied from external power supply				
Hardware version:	/				
Software version:	/				
Antenna type:	FPC Antenna				
Antenna gain:	3.58dBi Max				
Technical index for 5G WIFI					
Operation Band:	☐ U-NII-1	☐ U-NII-2A	☐ U-NII-2C	☒ U-NII-3	
Operation Frequency Range:	U-NII-3:	5805MHz			
Support bandwidth:	802.11a	☒ 20MHz			
	802.11n	☐ 20MHz	☐ 40MHz		
	802.11ac	☐ 20MHz	☐ 40MHz	☐ 80MHz	☐ 160MHz
Modulation:	802.11a: OFDM (BIT/SK, QPSK, BPSK, 16QAM) 802.11n: OFDM (BIT/SK, QPSK, BPSK, 16QAM, 64QAM) 802.11ac: OFDM (BIT/SK, QPSK, BPSK, 16QAM, 64QAM, 256QAM)				
Bit Rate of Transmitter:	802.11a: 6/9/12/18/24/36/48/54 Mbps 802.11n: up to 65Mbps 802.11ac: at most 78 Mbps				

2.3. Accessory Equipment information

Equipment Information			
Name	Model	S/N	Manufacturer
Notebook	ThinkBook 14G3 ACL	MP246QDR	Lenovo
AC/DC Adapter	FJ-SW20171404000D	/	FUJIA
Cable Information			
Name	Shielded Type	Ferrite Core	Length
/	/	/	/
Test Software Information			
Name	Versions	/	/
SecuerCRT	V7.1.1	/	/

2.4. Operation state

Operation Frequency List:

Operating Band	20MHz Bandwidth	
	Channel	Frequency (MHz)
U-NII-3	161	5805

Test channel is below:

Operating Band	Test Channel	20MHz	
		Channel	Frequency (MHz)
U-NII-3	CH_L	161	5805

Data Rated

Preliminary tests were performed in different data rate, and found which the below bit rate is worst case mode, so only show data which it is a worst case mode.

Mode	Data rate (worst mode)
802.11a	6Mbps

Test mode

For RF test items
The engineering test program was provided and enabled to make EUT continuous transmit.
For AC power line conducted emissions:
The EUT was set to connect with the WLAN AP under large package sizes transmission.
For Radiated spurious emissions test item:
The engineering test program was provided and enabled to make EUT continuous transmit. The EUT in each of three orthogonal axis emissions had been tested, but only the worst case (X axis) data Recorded in the report.
For DFS test items
The EUT has been tested under test mode condition. The Applicant provides software to control the EUT for staying in DFS mode for testing.

2.5. Measurement Instruments List

Tonscend JS0806-2 Test system					
Item	Test Equipment	Manufacturer	Model No.	Serial No.	Calibrated until
1	MXA Signal Analyzer	Keysight	N9020A	MY46471737	Dec. 16, 2023
2	Spectrum Analyzer	R&S	FSU26	100105	Dec. 16, 2023
3	Spectrum Analyzer	R&S	FSV40-N	101331	Mar. 14, 2024
4	MXG Vector Signal Generator	Agilent	N5182A	MY47420864	Dec. 16, 2023
5	PSG Analog Signal Generator	Agilent	E8257D	MY46521908	Dec. 16, 2023
6	Power Sensor	Keysight	U2021XA	MY55130004	Mar. 14, 2024
7	Power Sensor	Keysight	U2021XA	MY55130006	Mar. 14, 2024
8	Wideband Radio Communication Tester	R&S	CMW500	102414	Dec. 16, 2023
9	High and low temperature box	ESPEC	MT3035	/	Mar. 24, 2024
10	JS1120 RF Test system	TONSCEND	v2.6	/	/

Radiated emission(3m chamber 2)					
Item	Test Equipment	Manufacturer	Model No.	Serial No.	Calibrated Until
1	Trilog-Broadband Antenna	Schwarzbeck	VULB 9168	9168-1013	Dec. 07, 2024
2	Horn Antenna	Schwarzbeck	BBHA 9120D	9120D-647	Dec. 07, 2024
3	Loop Antenna	LAPLAC	RF300	9138	Dec. 16, 2023
4	Spectrum Analyzer	R&S	FSU26	100105	Dec. 16, 2023
5	Spectrum Analyzer	R&S	FSV40-N	101331	Mar. 14, 2024
6	Pre-Amplifier	SONOMA	310	186194	Dec. 16, 2023
7	Low Noise Pre-Amplifier	EMCI	EMC051835	980075	Dec. 16, 2023
8	Test Receiver	R&S	ESCI7	100967	Dec. 16, 2023
9	3m chamber 2	Frankonia	EE025	/	Oct. 23, 2024

Radiated emission(3m chamber 3)					
Item	Test Equipment	Manufacturer	Model No.	Serial No.	Calibrated Until
1	Trilog-Broadband Antenna	Schwarzbeck	VULB 9163	01026	Dec. 18, 2024
2	Horn Antenna	Schwarzbeck	BBHA 9120D	9120D-647	Dec. 01, 2024
3	Test Receiver	Keysight	N9038A	MY56400071	Dec. 16, 2023
4	Broadband Premplifier	SCHWARZBECK	BBV9743B	259	Dec. 16, 2023
5	Mirowave Broadband Amplifier	SCHWARZBECK	BBV9718C	111	Dec. 16, 2023
6	Pre-Amplifier	R&S	SCU-26	10033	Dec. 16, 2023
7	Pre-Amplifier	R&S	SCU-40	10030	Dec. 16, 2023
8	Board-Band Horn Antenna	Schwarzbeck	BBHA 9170	BBHA 9170-497	Dec. 16, 2023
9	3m chamber 3	YIHENG	EE106	/	Sep. 09, 2023

Conducted Emission					
Item	Test Equipment	Manufacturer	Model No.	Serial No.	Calibrated until
1	LISN	R&S	ENV216	101112	Dec. 16, 2023
2	LISN	R&S	ENV216	101113	Dec. 16, 2023
3	EMI Test Receiver	R&S	ESCS30	100353	Dec. 16, 2023

Note: 1. The Cal. Interval was one year.
2. The Cal. Interval was three year of the chamber
3. The cable loss has calculated in test result which connection between each test instruments.

3. TEST ITEM AND RESULTS

3.1. Conducted Emission

Limit

FCC CFR Title 47 Part 15 Subpart C Section 15.207/ RSS – Gen 8.8:

Frequency range (MHz)	Limit (dBuV)	
	Quasi-peak	Average
0.15-0.5	66 to 56*	56 to 46*
0.5-5	56	46
5-30	60	50

* Decreases with the logarithm of the frequency.

Test Configuration

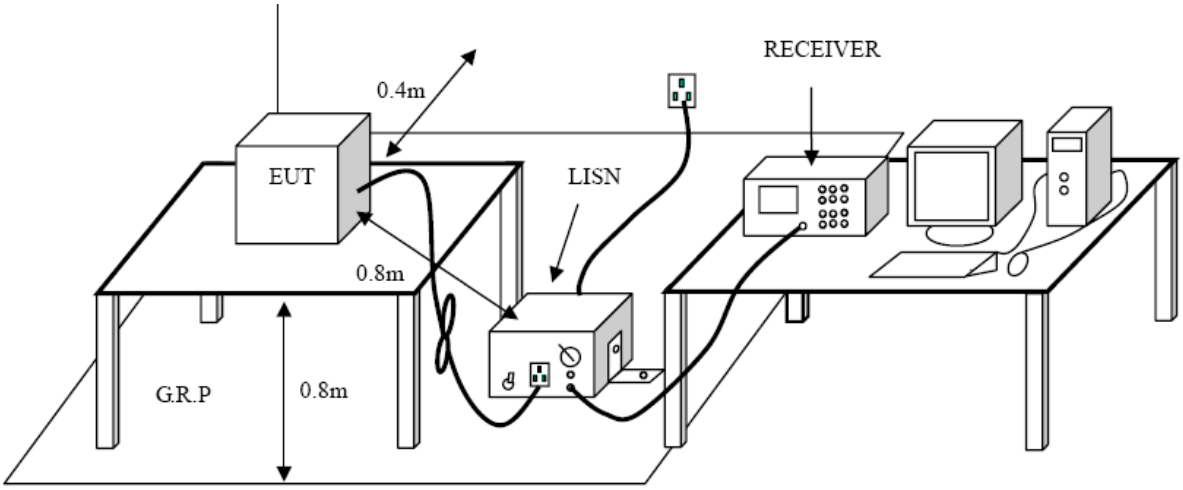

Test Procedure

1. The EUT was setup according to ANSI C63.10:2013 requirements.
2. The EUT was placed on a platform of nominal size, 1 m by 1.5 m, raised 80 cm above the conducting ground plane. The vertical conducting plane was located 40 cm to the rear of the EUT. All other surfaces of EUT were at least 80 cm from any other grounded conducting surface.
3. The EUT and simulators are connected to the main power through a line impedances stabilization network (LISN). The LISN provides a 50 ohm /50uH coupling impedance for the measuring equipment.
   The peripheral devices are also connected to the main power through a LISN. (Please refer to the block diagram of the test setup and photographs)
4. Each current-carrying conductor of the EUT power cord, except the ground (safety) conductor, was individually connected through a LISN to the input power source.
5. The excess length of the power cord between the EUT and the LISN receptacle were folded back and forth at the center of the lead to form a bundle not exceeding 40 cm in length.
6. Conducted Emissions were investigated over the frequency range from 0.15MHz to 30MHz using a receiver bandwidth of 9 kHz.
7. During the above scans, the emissions were maximized by cable manipulation.

Test Mode

Please refer to the clause 2.4.

Test Results

Test Voltage:	AC 120V/60 Hz
Terminal:	Line

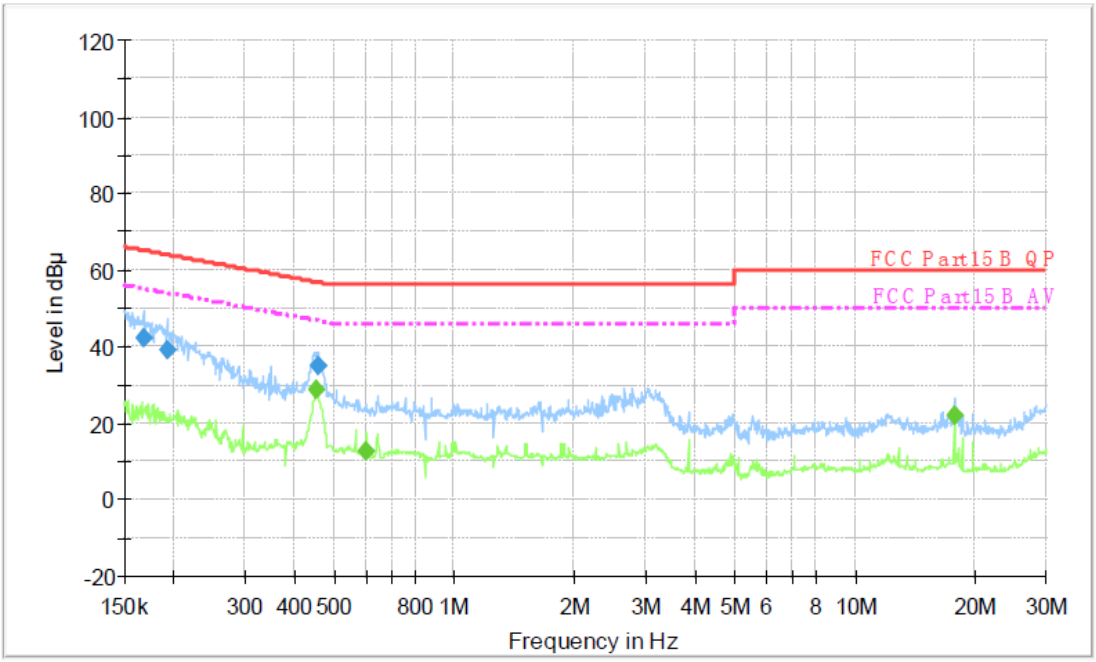

Final Measurement Detector 1

Frequency (MHz)	QuasiPeak (dBµ V)	Meas. Time (ms)	Bandwidth (kHz)	Filter	Line	Corr. (dB)	Margin (dB)	Limit (dBµ V)	Comment
0.167740	42.1	1000.00	9.000	On	L1	9.7	23.0	65.1	
0.192120	38.9	1000.00	9.000	On	L1	9.7	25.0	63.9	
0.456880	34.9	1000.00	9.000	On	L1	9.7	21.8	56.7	

Final Measurement Detector 2

Frequency (MHz)	Average (dBµ V)	Meas. Time (ms)	Bandwidth (kHz)	Filter	Line	Corr. (dB)	Margin (dB)	Limit (dBµ V)	Comment
0.451440	28.8	1000.00	9.000	On	L1	9.7	18.0	46.8	
0.604170	12.6	1000.00	9.000	On	L1	9.7	33.4	46.0	
17.696130	21.8	1000.00	9.000	On	L1	9.9	28.2	50.0	

Emission Level= Read Level+ Correct Factor

Test Voltage:	AC 120V/60 Hz
Terminal:	Neutral

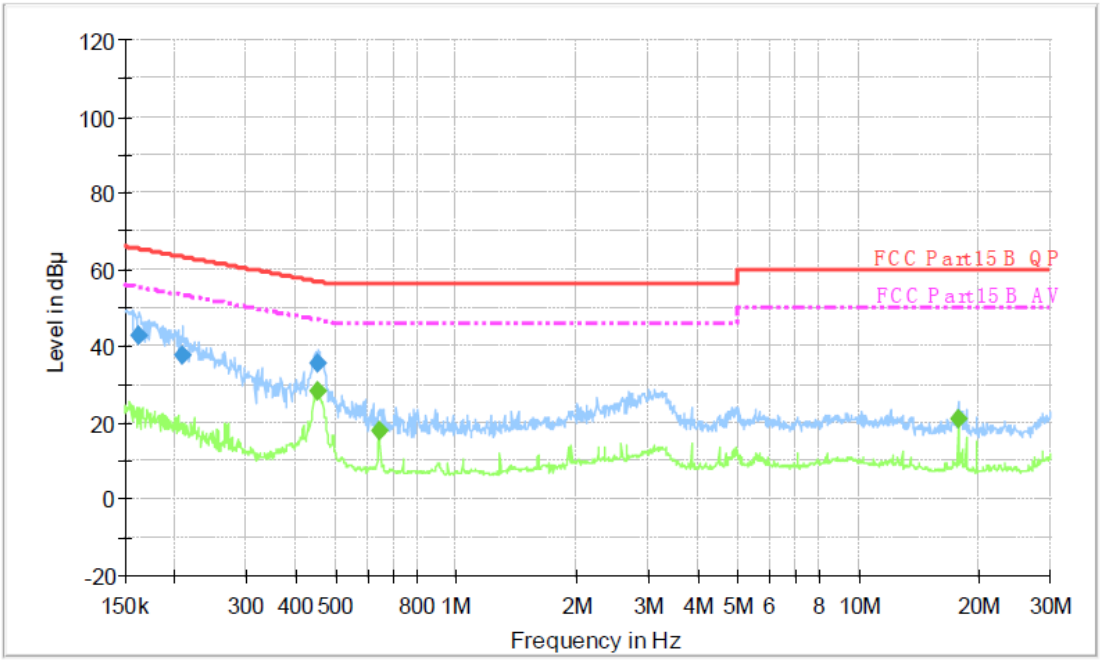

Final Measurement Detector 1

Frequency (MHz)	QuasiPeak (dBµ V)	Meas. Time (ms)	Bandwidth (kHz)	Filter	Line	Corr. (dB)	Margin (dB)	Limit (dBµ V)	Comment
0.163120	42.7	1000.00	9.000	On	N	10.0	22.6	65.3	
0.208920	37.3	1000.00	9.000	On	N	10.0	25.9	63.2	
0.453240	35.5	1000.00	9.000	On	N	10.0	21.4	56.8	

Final Measurement Detector 2

Frequency (MHz)	Average (dBµ V)	Meas. Time (ms)	Bandwidth (kHz)	Filter	Line	Corr. (dB)	Margin (dB)	Limit (dBµ V)	Comment
0.455050	28.1	1000.00	9.000	On	N	10.0	18.7	46.8	
0.641450	17.7	1000.00	9.000	On	N	10.0	28.3	46.0	
17.696130	21.0	1000.00	9.000	On	N	10.0	29.0	50.0	

Emission Level= Read Level+ Correct Factor

3.2. Radiated Emission

Limit

FCC CFR Title 47 Part 15 Subpart C Section 15.209/ RSS-Gen 8.9

Frequency	Limit (dBuV/m @3m)	Value
30 MHz ~ 88 MHz	40.00	Quasi-peak
88 MHz ~ 216 MHz	43.50	Quasi-peak
216 MHz ~ 960 MHz	46.00	Quasi-peak
960 MHz ~ 1 GHz	54.00	Quasi-peak
Above 1 GHz	54.00	Average
	74.00	Peak

Note:

(1) The tighter limit applies at the band edges.

(2) Emission Level (dBuV/m)= 20log Emission Level (uV/m).

Limits of unwanted emission out of the restricted bands

FCC CFR Title 47 Part 15 Subpart C Section 15.407(b)/ RSS-247 6.2.1.2 & RSS-247 6.2.4.2

Frequency (MHz)	EIRP Limits (dBm)	Equivalent Field Strength at 3m (dBuV/m)
5150~5250	-27	68.2
5250~5350	-27	68.2
5470~5725	-27	68.2
5725~5825	-27(Note 2)	68.2
	10(Note 2)	105.2
	15.6(Note 2)	110.8
	27(Note 2)	122.2

Note: 1. The following formula is used to convert the equipment isotropic radiated power (eirp) to field strength: E= $\frac{1000000\sqrt{30P}}{3}$ uV/m, where P is the eirp (Watts)

2. According to FCC 16-24, All emissions shall be limited to a level of -27 dBm/MHz at 75 MHz or more above or below the band edge increasing linearly to 10 dBm/MHz at 25 MHz above or below the band edge, and from 25MHz above or below the band edge increasing linearly to a level of 15.6 dBm/MHz at 5 MHz above or below the band edge, and from 5 MHz above or below the band edge increasing linearly to a level of 27dBm/MHz at the band edge.

Test Configuration

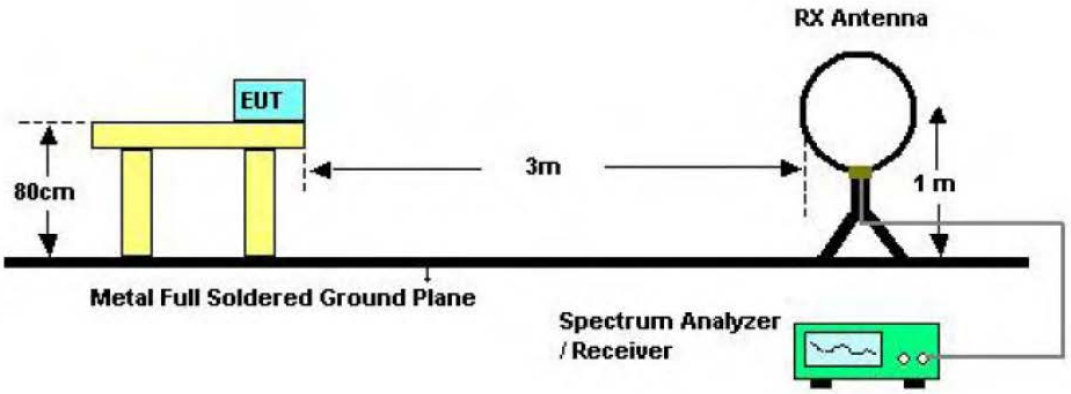

Below 30MHz Test Setup

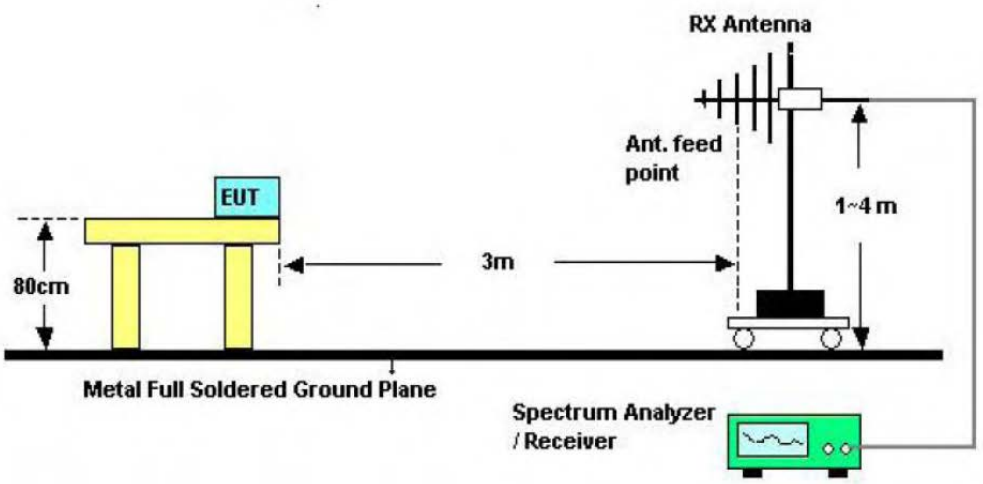

Below 1000MHz Test Setup

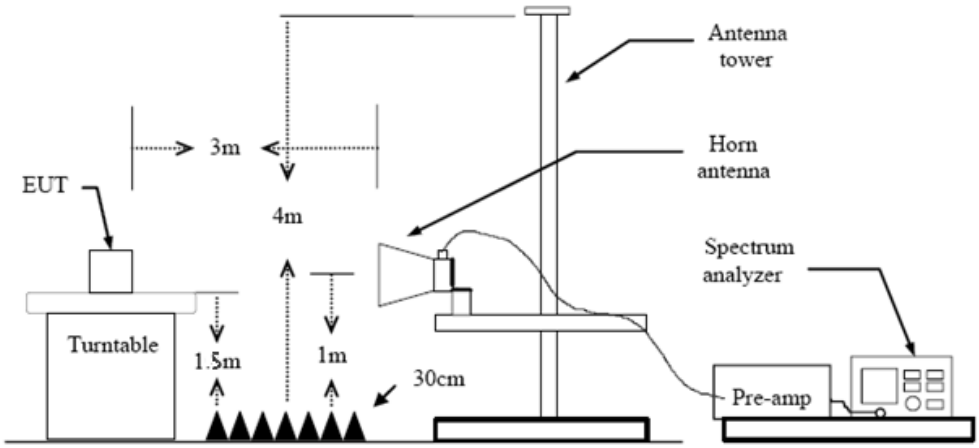

Above 1GHz Test Setup

Test Procedure

1. The EUT was setup and tested according to ANSI C63.10:2013
2. The EUT is placed on a turn table which is 0.8 meter above ground for below 1 GHz, and 1.5 m for above 1 GHz. The turn table is rotated 360 degrees to determine the position of the maximum emission level.

3. The EUT was set 3 meters from the receiving antenna, which was mounted on the top of a variable height antenna tower.
4. For each suspected emission, the EUT was arranged to its worst case and then tune the Antenna tower (from 1 m to 4 m) and turntable (from 0 degree to 360 degrees) to find the maximum reading. A pre-amp and a high pass filter are used for the test in order to get better signal level to comply with the guidelines.
5. Set to the maximum power setting and enable the EUT transmit continuously.
6. Use the following spectrum analyzer settings

(1) Span shall wide enough to fully capture the emission being measured;

(2) Below 30 MHz:

9kHz – 150kHz, RBW=200Hz, VBW⩾RBW, Sweep=auto, Detector function=peak, Trace=max hold;

150kHz – 30MHz, RBW=9kHz, VBW⩾RBW, Sweep=auto, Detector function=peak, Trace=max hold;

If the emission level of the EUT measured by the peak detector is 3 dB lower than the applicable limit, the peak emission level will be reported. Otherwise, the emission measurement will be repeated using the quasi-peak detector and reported.

(3) 30 MHz - 1 GHz:

RBW=120 kHz, VBW=300 kHz, Sweep=auto, Detector function=peak, Trace=max hold;

If the emission level of the EUT measured by the peak detector is 3 dB lower than the applicable limit, the peak emission level will be reported. Otherwise, the emission measurement will be repeated using the quasi-peak detector and reported.

(3) From 1 GHz to 10th harmonic:

RBW=1MHz, VBW=3MHz Peak detector for Peak value.

RBW=1MHz, VBW⩾1/T Peak detector for Average value.

Note 1: For the 1/T& Duty Cycle please refer to clause Duty Cycle.

Test Mode

Please refer to the clause 2.4.

Test Result

9 KHz~30 MHz

From 9 KHz to 30 MHz: Conclusion: PASS

Note: The amplitude of spurious emissions which are attenuated by more than 20dB below the permissible value has no need to be reported.

30MHz-1GHz

Ant. Pol.:	Horizontal
Test Mode:	TX 802.11a Mode 5805MHz (U-NII-3)
Remark:	Only worse case is reported

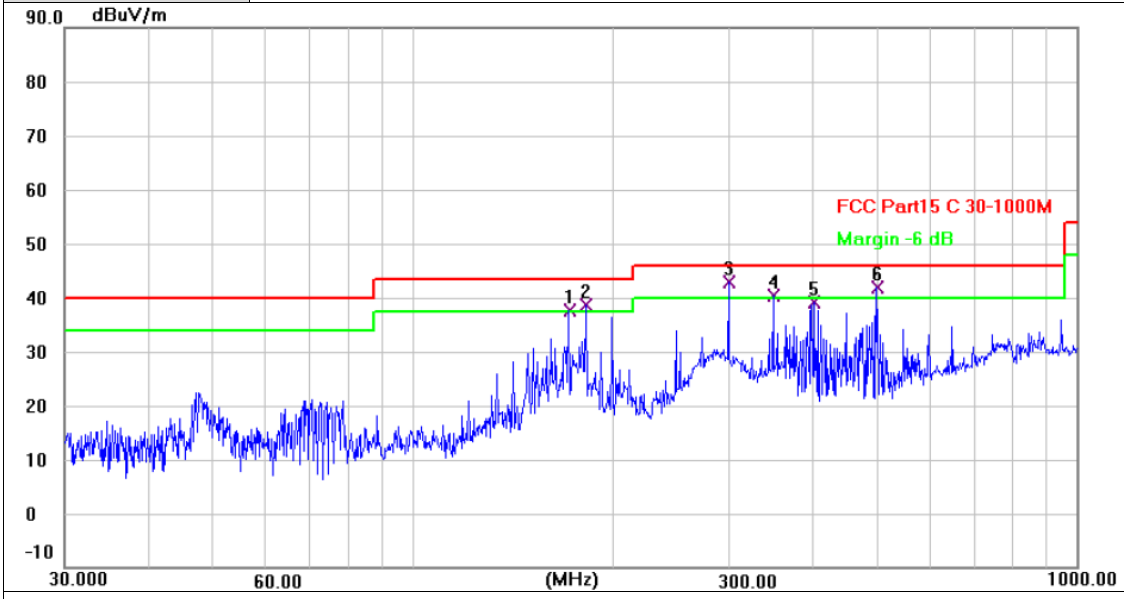

No.	Frequency (MHz)	Reading (dBuV)	Factor (dB/m)	Level (dBuV/m)	Limit (dBuV/m)	Margin (dB)	Detector
1 !	171.9946	56.07	-18.51	37.56	43.50	-5.94	QP
2 !	182.5592	56.41	-17.79	38.62	43.50	-4.88	QP
3 *	299.3158	56.32	-13.55	42.77	46.00	-3.23	QP
4 !	349.2500	52.61	-12.32	40.29	46.00	-5.71	QP
5	401.8384	50.27	-11.02	39.25	46.00	-6.75	QP
6 !	499.4246	51.15	-9.20	41.95	46.00	-4.05	QP

Remarks:
1.Factor (dB/m) = Antenna Factor (dB/m)+Cable Factor (dB)-Pre-amplifier Factor
2.Margin value = Level -Limit value

Ant. Pol.:	Vertical
Test Mode:	TX 802.11a Mode 5805MHz (U-NII-3)
Remark:	Only worse case is reported

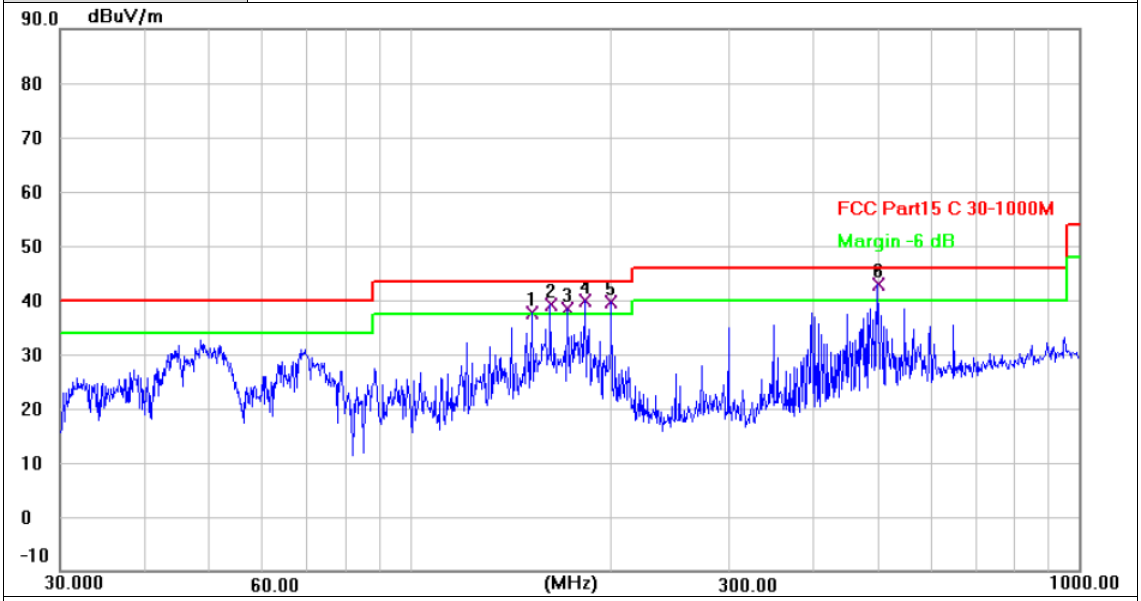

No.	Frequency (MHz)	Reading (dBuV)	Factor (dB/m)	Level (dBuV/m)	Limit (dBuV/m)	Margin (dB)	Detector
1 !	152.1297	57.09	-19.52	37.57	43.50	-5.93	QP
2 !	162.0414	58.17	-19.10	39.07	43.50	-4.43	QP
3 !	171.9946	56.93	-18.51	38.42	43.50	-5.08	QP
4 !	182.5592	57.74	-17.79	39.95	43.50	-3.55	QP
5 !	200.0733	55.69	-16.07	39.62	43.50	-3.88	QP
6 *	499.4247	51.96	-9.20	42.76	46.00	-3.24	QP

Remarks:
1.Factor (dB/m) = Antenna Factor (dB/m)+Cable Factor (dB)-Pre-amplifier Factor
2.Margin value = Level -Limit value

Above 1GHz

Ant. Pol.:	Horizontal
Test Mode:	TX 802.11a Mode 5805MHz (U-NII-3)
Remark:	No report for the emission which more than 10 dB below the prescribed limit.

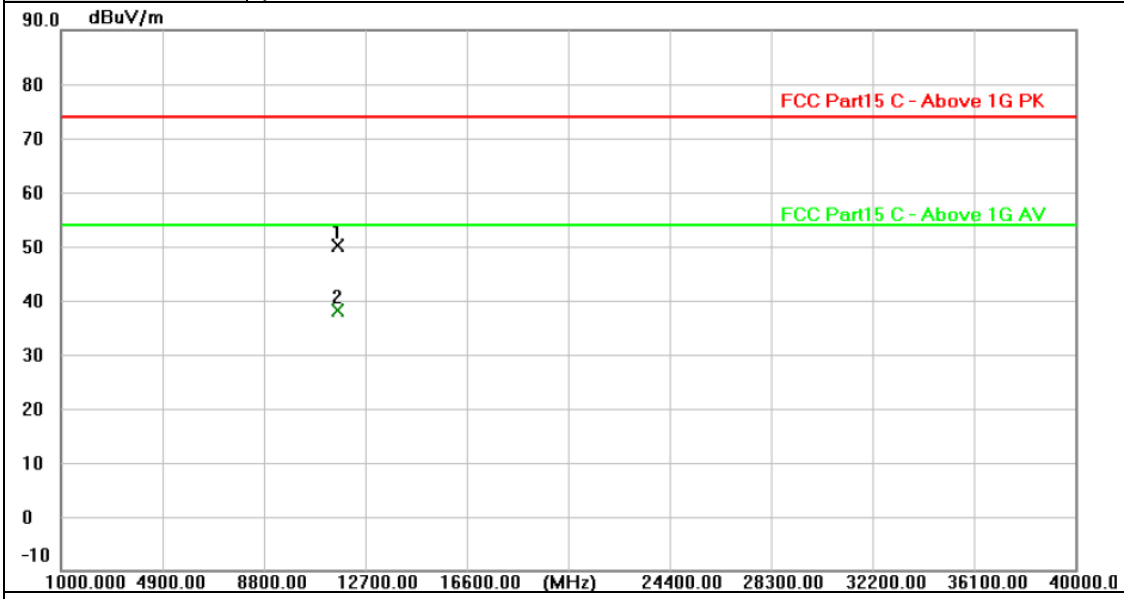

No.	Frequency (MHz)	Reading (dBuV)	Factor (dB/m)	Level (dBuV/m)	Limit (dBuV/m)	Margin (dB)	Detector
1	11609.369	35.02	15.09	50.11	74.00	-23.89	peak
2 *	11610.291	23.15	15.10	38.25	54.00	-15.75	AVG

Remarks:
1.Factor (dB/m) = Antenna Factor (dB/m)+Cable Factor (dB)-Pre-amplifier Factor
2.Margin value = Level -Limit value

Ant. Pol.:	Vertical
Test Mode:	TX 802.11a Mode 5805MHz (U-NII-3)
Remark:	No report for the emission which more than 10 dB below the prescribed limit.

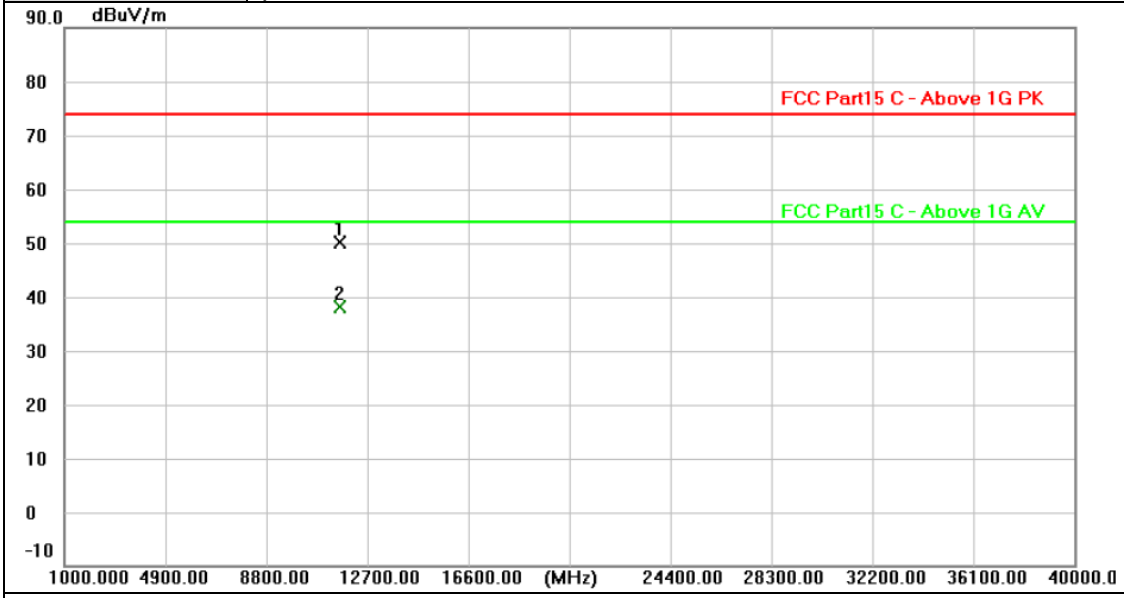

No.	Frequency (MHz)	Reading (dBuV)	Factor (dB/m)	Level (dBuV/m)	Limit (dBuV/m)	Margin (dB)	Detector
1	11610.000	35.12	15.09	50.21	74.00	-23.79	peak
2 *	11610.819	23.03	15.10	38.13	54.00	-15.87	AVG

Remarks:
1.Factor (dB/m) = Antenna Factor (dB/m)+Cable Factor (dB)-Pre-amplifier Factor
2.Margin value = Level -Limit value

3.3. Band Edge Emissions

Limit

Limits of unwanted emission out of the restricted bands

FCC CFR Title 47 Part 15 Subpart C Section 15.407(b)/ RSS-247 6.2.1.2 & RSS-247 6.2.4.2

Frequency (MHz)	EIRP Limits (dBm)	Equivalent Field Strength at 3m (dBuV/m)
5150~5250	-27	68.2
5250~5350	-27	68.2
5470~5725	-27	68.2
5725~5825	-27(Note 2)	68.2
	10(Note 2)	105.2
	15.6(Note 2)	110.8
	27(Note 2)	122.2

Note: 1. The following formula is used to convert the equipment isotropic radiated power (eirp) to field strength: E=$\frac{1000000\sqrt{30P}}{3}$ uV/m, where P is the eirp (Watts)

2. According to FCC 16-24, All emissions shall be limited to a level of -27 dBm/MHz at 75 MHz or more above or below the band edge increasing linearly to 10 dBm/MHz at 25 MHz above or below the band edge, and from 25MHz above or below the band edge increasing linearly to a level of 15.6 dBm/MHz at 5 MHz above or below the band edge, and from 5 MHz above or below the band edge increasing linearly to a level of 27dBm/MHz at the band edge.

Test Configuration

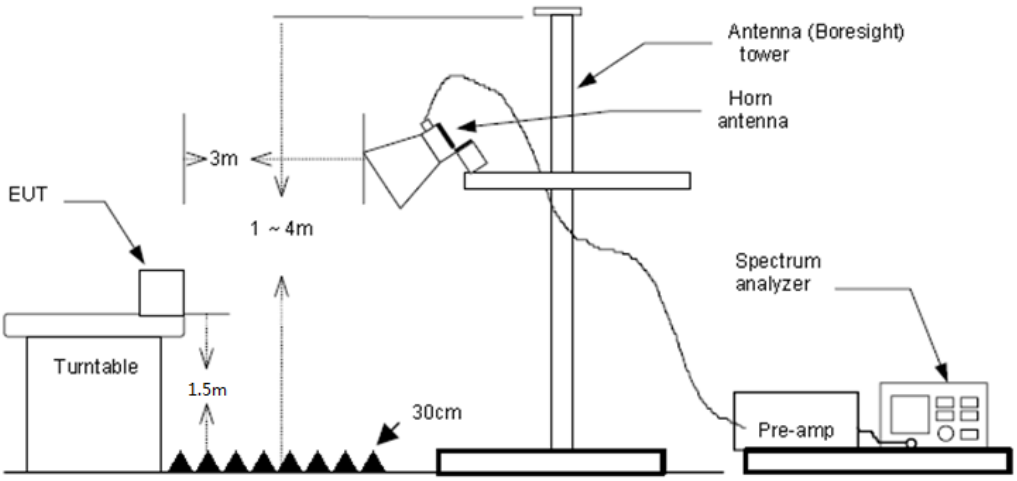

Test Procedure

1. The EUT was setup and tested according to ANSI C63.10:2013 requirements.
2. The EUT is placed on a turn table which is 1.5 meter above ground. The turn table is rotated 360 degrees to determine the position of the maximum emission level.
3. The EUT was positioned such that the distance from antenna to the EUT was 3 meters.
4. The antenna is scanned from 1 meter to 4 meters to find out the maximum emission level. This is repeated for both horizontal and vertical polarization of the antenna. In order to find the maximum emission, all of the interface cables were manipulated according to ANSI C63.10:2013 on radiated measurement.

5. The receiver set as follow:
   RBW=1MHz, VBW=3MHz PEAK detector for Peak value.
   RBW=1MHz, VBW see note 1 with Peak Detector for Average Value.

   Note 1: For measurements above 1 GHz the resolution bandwidth is set to 1 MHz, then the video bandwidth is set to 3 MHz for peak measurements and 1 MHz resolution bandwidth with 1/T video bandwidth with peak detector for average measurements. For the Duty Cycle please refer to clause Appendix E: Duty Cycle

Test Mode

Please refer to the clause 2.4.

Test Results

Remark: Pre-scan both 4500-5150MHz, 5350-5460MHz were investigated, Report only show the test data for worst case.

Ant. Pol.:	Horizontal
Test Mode:	TX 802.11a Mode 5805MHz (U-NII-3)
Remark:	No report for the emission which more than 10 dB below the prescribed limit.

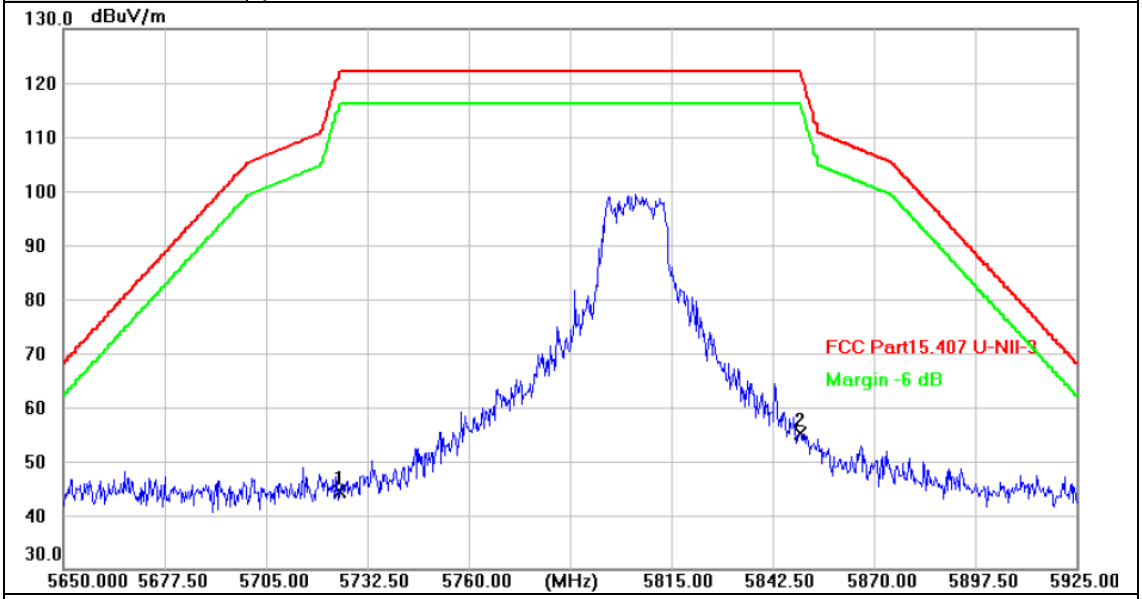

No.	Frequency (MHz)	Reading (dBuV)	Factor (dB/m)	Level (dBuV/m)	Limit (dBuV/m)	Margin (dB)	Detector
1	5725.000	33.28	11.21	44.49	122.20	-77.71	peak
2 *	5850.000	43.76	11.40	55.16	122.20	-67.04	peak

Remarks:
1.Factor (dB/m) = Antenna Factor (dB/m)+Cable Factor (dB)-Pre-amplifier Factor
2.Margin value = Level -Limit value

Ant. Pol.:	Vertical
Test Mode:	TX 802.11a Mode 5805MHz (U-NII-3)
Remark:	No report for the emission which more than 10 dB below the prescribed limit.

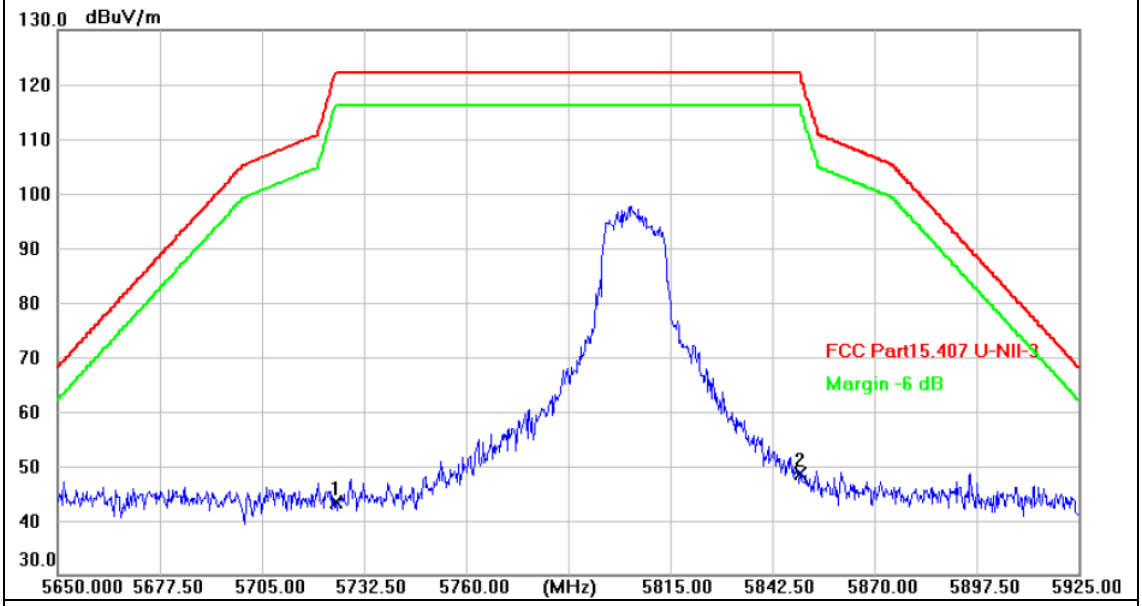

No.	Frequency (MHz)	Reading (dBuV)	Factor (dB/m)	Level (dBuV/m)	Limit (dBuV/m)	Margin (dB)	Detector
1	5725.000	32.25	11.21	43.46	122.20	-78.74	peak
2 *	5850.000	37.32	11.40	48.72	122.20	-73.48	peak

Remarks:
1.Factor (dB/m) = Antenna Factor (dB/m)+Cable Factor (dB)-Pre-amplifier Factor
2.Margin value = Level -Limit value

3.4. Bandwidth Test

Limit

FCC Part 15 Subpart C(15.407)/ RSS-247		
Test Item	**Limit**	**Frequency Range (MHz)**
26 Bandwidth	N/A	5150~5250
		5250~5350
		5500~5700
6 dB Bandwidth	>500kHz	5725~5850

Test Configuration

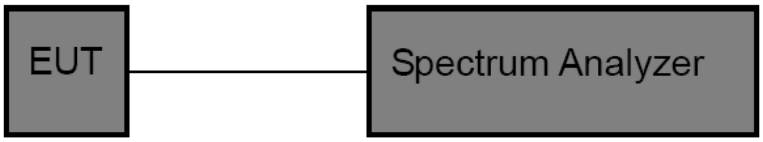

Test Procedure

Please refer to According to KDB789033 D02, for the measurement methods.

The setting of the spectrum analyser as below:

26dB Bandwidth Test	
Spectrum Parameters	**Setting**
Attenuation	Auto
Span	>26 dB Bandwidth
RBW	Approximately 1% of the emission bandwidth
VBW	VBW>RBW
Detector	Peak
Trace	Max Hold
Sweep Time	Auto

6dB Bandwidth Test	
Spectrum Parameters	**Setting**
Attenuation	Auto
Span	>6 dB Bandwidth
RBW	100 kHz
VBW	VBW>=3*RBW
Detector	Peak
Trace	Max Hold
Sweep Time	Auto
99% Occupied Bandwidth Test	
Spectrum Parameters	**Setting**
Attenuation	Auto
RBW	1% to 5% of the OBW
VBW	≥ 3RBW
Detector	Peak
Trace	Max Hold

Note: The EUT was set to continuously transmitting in each mode and low, Middle and high channel for the test.

Test Mode

Please refer to the clause 2.4.

Test Results

Test Mode	Antenna	Channel	26db EBW [MHz]	FL[MHz]	FH[MHz]	Limit[MHz]	Verdict
11A	Ant1	5805	20.72	5794.56	5815.28	---	PASS

11A_Ant1_5805

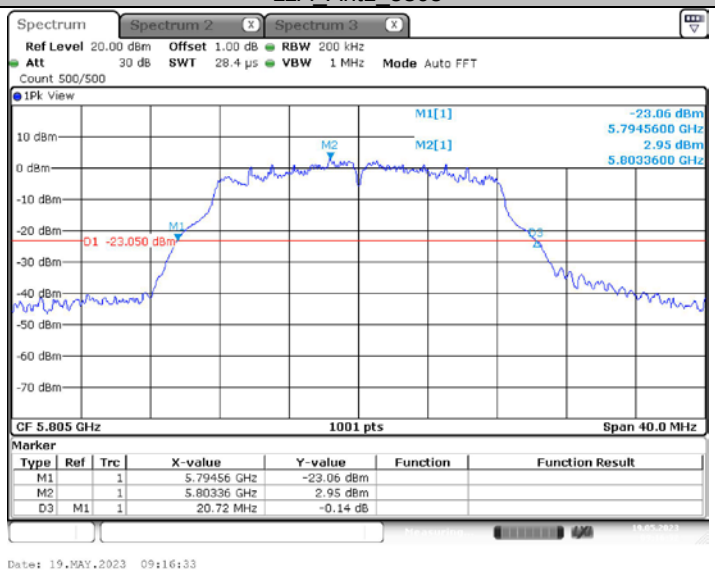

3.5. Output Power Test

Limit

FCC Part 15 Subpart E (15.407)		
Test Item	**Limit**	**Frequency Range(MHz)**
Conducted Output Power	Fixed: 1 Watt (30dBm) Mobile and Portable: 250mW (24dBm)	5150~5250
	250mW (24dBm)	5250~5350
	250mW (24dBm)	5500~5700
	1 Watt (30dBm)	5725~5850

IC Power&PSD Limit					
Frequency	Type of devices	Maximum Conducted Output Power	EIRP Output Power	Conducted Power Spectral Density	EIRP Power Spectral Density
5150MHz-5250MHz	in vehicles		30mW or 1.76 + 10 × $\log_{10}$B dBm, whichever is less (B=99% OBW in MHz)		
	Other Devices		200mW or 10 + 10 × $\log_{10}$B dBm, whichever is less (B=99% OBW in MHz)		10dBm/MHz
5250MHz-5350MHz	in vehicles		30mW or 1.76 + 10 × $\log_{10}$B dBm, whichever is less (B=99% OBW in MHz)		
	Other Devices	250mW or 11 + 10 × $\log_{10}$B dBm, whichever is less (B=99% OBW in MHz)	1W or 17 + 10 ×$\log_{10}$B dBm, whichever is less (B=99% OBW in MHz)	11dBm/Mhz	
5470MHz-5600MHz 5650MHz-5725MHz	ALL Devices	250mW or 11 + 10 × $\log_{10}$B dBm, whichever is less (B=99% OBW in MHz)	1W or 17 + 10 ×$\log_{10}$B dBm, whichever is less (B=99% OBW in MHz)	11dBm/Mhz	
5725MHz-5850MHz	ALL Devices	1W		30dBm/500KHz	

Test Configuration

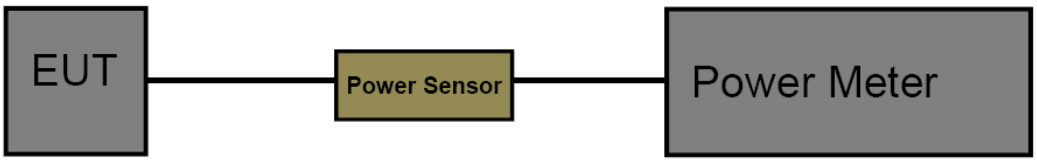

Test Procedure

The measurement is according to section 3 of KDB 789033 D02 General UNII Test Procedures New Rules V02r01.

Test Mode

Please refer to the clause 2.4.

Test Result

Please see the Appendix B.

3.6. Power Spectral Density Test

Limit

FCC Part 15 Subpart E(15.407)/ RSS-247

For the 5.15~5.25GHz band:

- Outdoor AP

  The peak power spectral density (PSD) shall not exceed the lesser of 17dBm/MHz.
  If G_{Tx}>6dBi, then PSD =17-(G_{Tx}-6).
- Indoor AP

  The peak power spectral density (PSD) shall not exceed the lesser of 17dBm/MHz.
  If G_{Tx}>6dBi, then PSD =17-(G_{Tx}-6).
- Point-to-point AP

  The peak power spectral density (PSD) shall not exceed the lesser of 17dBm/MHz.
  If G_{Tx}>23dBi, then PSD =17-(G_{Tx}-23).
- Client devices

  The peak power spectral density (PSD) shall not exceed the lesser of 11dBm/MHz.
  If G_{Tx}>6dBi, then PSD =11-(G_{Tx}-6).

For the 5.25~5.35GHz band:

The peak power spectral density (PSD) shall not exceed the lesser of 11dBm/MHz.
If G_{Tx}>6dBi, then PSD =11-(G_{Tx}-6).

For the 5.47~5.725GHz band:

The peak power spectral density (PSD) shall not exceed the lesser of 11dBm/MHz.
If G_{Tx}>6dBi, then PSD =11-(G_{Tx}-6).

For the 5.725~5.85GHz band:

- Point-to-multipoint systems (P2M)

  The peak power spectral density (PSD) shall not exceed the lesser of 30dBm/500kHz.
  If G_{Tx}>6dBi, then PSD =30-(G_{Tx}-6).
- Point-to-point systems (P2P)

  The peak power spectral density (PSD) shall not exceed the lesser of 30dBm/500kHz.

Note: G_{Tx}: EUT Antenna gain.

IC Power&PSD Limit					
Frequency	Type of devices	Maximum Conducted Output Power	EIRP Output Power	Conducted Power Spectral Density	EIRP Power Spectral Density
5150MHz-5250MHz	in vehicles		30mW or 1.76 + 10 × $\log_{10}$B dBm, whichever is less (B=99% OBW in MHz)		
	Other Devices		200mW or 10 + 10 × $\log_{10}$B dBm, whichever is less (B=99% OBW in MHz)		10dBm/MHz
5250MHz-5350MHz	in vehicles		30mW or 1.76 + 10 × $\log_{10}$B dBm, whichever is less (B=99% OBW in MHz)		
	Other Devices	250mW or 11 + 10 × $\log_{10}$B dBm, whichever is less (B=99% OBW in MHz)	1W or 17 + 10 ×$\log_{10}$B dBm, whichever is less (B=99% OBW in MHz)	11dBm/Mhz	
5470MHz-5600MHz 5650MHz-5725MHz	ALL Devices	250mW or 11 + 10 × $\log_{10}$B dBm, whichever is less (B=99% OBW in MHz)	1W or 17 + 10 ×$\log_{10}$B dBm, whichever is less (B=99% OBW in MHz)	11dBm/Mhz	
5725MHz-5850MHz	ALL Devices	1W		30dBm/500KHz	

Test Configuration

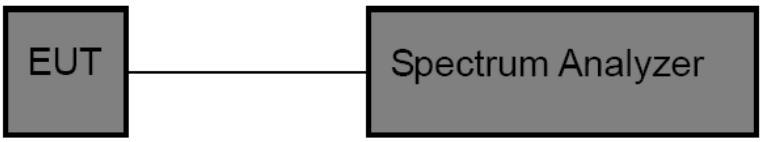

Test Procedure

The EUT was directly connected to the Spectrum Analyzer and antenna output port as show in the block diagram above. The measurement is according to KDB 789033 D02 General UNII Test Procedures New Rules V02r01.

(1) The EUT was directly connected to the spectrum analyzer and antenna output port as show in the block diagram above.
(2) Set analyzer center frequency to transmitting frequency.
(3) Set the span to encompass the entire emissions bandwidth (EBW)(alternatively, the entire 99% OBW) of the signal.
(4) RBW=1MHz for devices operating in the bands 5.15-5.25 GHz, 5.25-5.35 GHz, and 5.47-5.725 GHz
RBW=500kHz for devices operating in the band 5.725-5.85 GHz
(5) Set the VBW to: □ 3 RBW
(6) Detector: AVG
(7) Trace: Max Hold and View
(7) Sweep time: auto
(8) Trace average at least 100 traces in power averaging.
(9) User the peak marker function to determine the maximum amplitude level within the RBW. Apply correction to the result if different RBW is used.

NOTE: The EUT was set to continuously transmitting in each mode and low, Middle and high channel for the test.

Test Mode

Please refer to the clause 2.4.

Test Result

Please see the Appendix C.

3.7. Frequency Stability Measurement

Limit

FCC Part 15 Subpart C(15.407)		
Test Item	**Limit**	**Frequency Range(MHz)**
Peak Excursion Measurement	Specified in the user's manual, the transmitter center frequency tolerance shall be ±20 ppm maximum for the 5 GHz band (IEEE 802.11n specification)	5150~5250
		5250~5350
		5500~5700
		5725~5850

Test Configuration

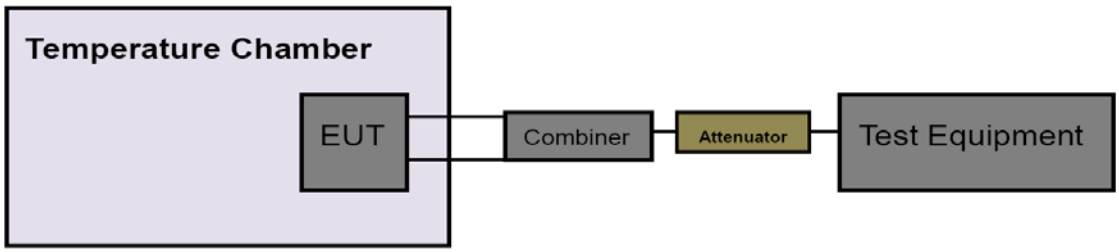

Test Procedure

The EUT was directly connected to the Spectrum Analyzer and antenna output port as show in the block diagram above.

(1) The EUT was directly connected to the spectrum analyzer and antenna output port as show in the block diagram above.
(2) Set analyzer center frequency to transmitting frequency.
(3) Set the span to encompass the entire emissions bandwidth (EBW) of the signal.
(4) Set the RBW to: 10MHz, VBW=10MHz with peak detector and maxhold settings.
(5) The test extreme voltage is to change the primary supply voltage from 4.5V to 5.5V percent of the nominal value.
(6) Extreme temperature is 0℃ ~ 45℃

NOTE: The EUT was set to continuously transmitting in continuously un-modulation transmitting mode.

Test Mode

Please refer to the clause 2.4.

Test Result

Please see the Appendix D.

3.8. Antenna Requirement

Standard Requirement

FCC CFR Title 47 Part 15 Subpart C Section 15.203:

An intentional radiator shall be designed to ensure that no antenna other than that furnished by the responsible party shall be used with the device. The use of a permanently attached antenna or of an antenna that uses a unique coupling to the intentional radiator, the manufacturer may design the unit so that a broken antenna can be replaced by the user, but the use of a standard antenna jack or electrical connector is prohibited.

Test Result

The directional gain of the antenna less than 6dBi, please refer to the EUT internal photographs antenna photo.

3.9. Dynamic Frequency Selection(DFS)

Requirement

Table 1: Applicability of DFS Requirements Prior to Use of a Channel

Requirement	Operational Mode		
	Master	Client Without Radar Detection	Client With Radar Detection
Non-Occupancy Period	Yes	Not required	Yes
DFS Detection Threshold	Yes	Not required	Yes
Channel Availability Check Time	Yes	Not required	Not required
U-NII Detection Bandwidth	Yes	Not required	Yes

Table 2: Applicability of DFS requirements during normal operation

Requirement	Operational Mode	
	Master Device or Client with Radar Detection	Client Without Radar Detection
DFS Detection Threshold	Yes	Not required
Channel Closing Transmission Time	Yes	Yes
Channel Move Time	Yes	Yes
U-NII Detection Bandwidth	Yes	Not required

Additional requirements for devices with multiple bandwidth modes	Master Device or Client with Radar Detection	Client Without Radar Detection
U-NII Detection Bandwidth and Statistical Performance Check	All BW modes must be tested	Not required
Channel Move Time and Channel Closing Transmission Time	Test using widest BW mode available	Test using the widest BW mode available for the link
All other tests	Any single BW mode	Not required
Note: Frequencies selected for statistical performance check (Section 7.8.4) should include several frequencies within the radar detection bandwidth and frequencies near the edge of the radar detection bandwidth. For 802.11 devices it is suggested to select frequencies in each of the bonded 20 MHz channels and the channel center frequency.		

LIMIT

1. DFS Detection Thresholds

Table 3: DFS Detection Thresholds for Master Devices and Client Devices With Radar Detection

Maximum Transmit Power	Value (See Notes 1, 2, and 3)
EIRP ≥ 200 milliwatt	-64 dBm
EIRP < 200 milliwatt and power spectral density < 10 dBm/MHz	-62 dBm
EIRP < 200 milliwatt that do not meet the power spectral density requirement	-64 dBm
Note 1: This is the level at the input of the receiver assuming a 0dBi receive antenna. Note 2: Throughout these test procedures an additional 1 dB has been added to the amplitude of the test transmission waveforms to account for variations in measurement equipment. This will ensure that the test signal is at or above the detection threshold level to trigger a DFS response. Note3: EIRP is based on the highest antenna gain. For MIMO devices refer to KDB Publication 662911 D01.	

2. DFS Response Requirements

Table 4: DFS Response Requirement Values

Parameter	Value
Non-occupancy period	Minimum 30 minutes
Channel Availability Check Time	60 seconds
Channel Move Time	10 seconds See Note 1.
Channel Closing Transmission Time	200 milliseconds + an aggregate of 60 milliseconds over remaining 10 second period. See Notes 1 and 2.
U-NII Detection Bandwidth	Minimum 100% of the U-NII 99% transmission power bandwidth. See Note 3.
Note 1: Channel Move Time and the Channel Closing Transmission Time should be performed with Radar Type 0. The measurement timing begins at the end of the Radar Type 0 burst. Note 2: The Channel Closing Transmission Time is comprised of 200 milliseconds starting at the beginning of the Channel Move Time plus any additional intermittent control signals required facilitating a Channel move (an aggregate of 60 milliseconds) during the remainder of the 10 second period. The aggregate duration of control signals will not count quiet periods in between transmissions. Note 3: During the U-NII Detection Bandwidth detection test, radar type 0 should be used. For each frequency step the minimum percentage of detection is 90 percent. Measurements are performed with no data traffic.	

RADAR TEST WAVEFORMS

This section provides the parameters for required test waveforms, minimum percentage of successful detections, and the minimum number of trials that must be used for determining DFS conformance. Step intervals of 0.1 microsecond for Pulse Width, 1 microsecond for PRI, 1 MHz for chirp width and 1 for the number of pulses will be utilized for the random determination of specific test waveforms.

Table 5 Short Pulse Radar Test Waveforms

Radar Type	Pulse Width (µsec)	PRI (µsec)	Number of Pulses	Minimum Percentage of Successful Detection	Minimum Number of Trials
0	1	1428	18	See Note 1	See Note 1
1	1	Test A: 15 unique PRI values randomly selected from the list of 23 PRI values in Table 5a	$\text{Roundup}\left\{\left(\frac{1}{360}\right)\cdot\left(\frac{19\cdot 10^6}{\text{PRI}_{\mu sec}}\right)\right\}$	60%	30
		Test B: 15 unique PRI values randomly selected within the range of 518-3066 µsec, with a minimum increment of 1 µsec, excluding PRI values selected in Test A			
2	1-5	150-230	23-29	60%	30
3	6-10	200-500	16-18	60%	30
4	11-20	200-500	12-16	60%	30
Aggregate (Radar Types 1-4)				80%	120
Note 1: Short Pulse Radar Type 0 should be used for the detection bandwidth test, channel move time, and channel closing time tests.					

A minimum of 30 unique waveforms are required for each of the Short Pulse Radar Types 2 through 4. If more than 30 waveforms are used for Short Pulse Radar Types 2 through 4, then each additional waveform must also be unique and not repeated from the previous waveforms. If more than 30 waveforms are used for Short Pulse Radar Type 1, then each additional waveform is generated with Test B and must also be unique and not repeated from the previous waveforms in Tests A or B.

For example if in Short Pulse Radar Type 1 Test B a PRI of 3066 µsec is selected, the number of pulses would be Round up $\left\{\left(\frac{1}{360}\right)\cdot\left(\frac{19\cdot 10^6}{3066}\right)\right\}$ = Round up {17.2} = 18.

Table 5a - Pulse Repetition Intervals Values for Test A

Pulse Repetition Frequency Number	Pulse Repetition Frequency (Pulses Per Second)	Pulse Repetition Interval (Microseconds)
1	1930.5	518
2	1858.7	538
3	1792.1	558
4	1730.1	578
5	1672.2	598
6	1618.1	618
7	1567.4	638
8	1519.8	658
9	1474.9	678
10	1432.7	698

11	1392.8	718
12	1355	738
13	1319.3	758
14	1285.3	778
15	1253.1	798
16	1222.5	818
17	1193.3	838
18	1165.6	858
19	1139	878
20	1113.6	898
21	1089.3	918
22	1066.1	938
23	326.2	3066

Table 6 – Long Pulse Radar Test Waveform

Radar Type	Pulse Width (µsec)	Chirp Width (MHz)	PRI (µsec)	Number of Pulses per Burst	Number of Bursts	Minimum Percentage of Successful Detection	Minimum Number of Trials
5	50-100	5-20	1000-2000	1-3	8-20	80%	30

The parameters for this waveforms are randomly chosen. Thirty unique waveforms are required for the Long Pulse Radar Type waveforms. If more than 30 waveforms are used for the Long Pulse Radar Type wave forms, then each additional waveform must also be unique and not repeated from the previous waveforms.

Table 7 – Frequency Hopping Radar Test Waveform

Radar Type	Pulse Width (µsec)	PRI (µsec)	Pulses per Hop	Hopping Rate (kHz)	Hopping Sequence Length (msec)	Minimum Percentage of Successful Detection	Minimum Number of Trials
6	1	333	9	0.333	300	70%	30

For the Frequency Hopping Radar Type, the same Burst parameters are used for each wave form. The hopping sequence is different for each wave form and a 100-length segment is selected from the hopping sequence defined by the following algorithm:

The first frequency in a hopping sequence is selected randomly from the group of 475 integer frequencies from 5250–5724MHz.Next,the frequency that was just chosen is removed from the group and a frequency is randomly selected from the remaining 474 frequencies in the group. This process continues until all 475 frequencies are chosen for the set. For selection of a random frequency, the frequencies remaining within the group are always treated as equally likely.

Calibration of Radar Waveform

Radar Waveform Calibration Procedure

1) A 50 ohm load is connected in place of the spectrum analyzer, and the spectrum analyzer is connected to place of the master
2) The interference Radar Detection Threshold Level is -62dBm + 0dBi +1dB = -61dBm that had been taken into account the output power range and antenna gain.
3) The following equipment setup was used to calibrate the conducted radar waveform. A vector signal generator was utilized to establish the test signal level for radar type 0. During this process there were no transmissions by either the master or client device. The spectrum analyzer was switched to the zero spans (time domain) at the frequency of the radar waveform generator. Peak detection was

used. The spectrum analyzer resolution bandwidth (RBW) and video bandwidth (VBW) were set to 3 MHz. The spectrum analyzer had offset -1.0dB to compensate RF cable loss 1.0dB.

4) The vector signal generator amplitude was set so that the power level measured at the spectrum analyzer was - -62dBm + 0dBi +1dB = -61dBm. Capture the spectrum analyzer plots on short pulse radar waveform.

Conducted Calibration Setup

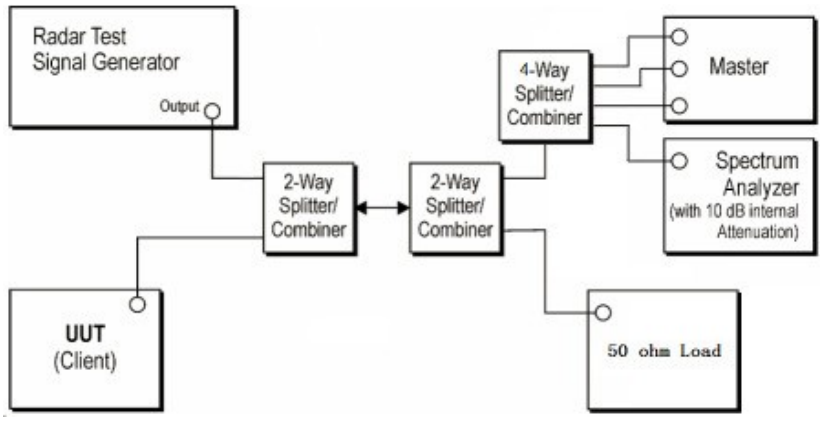

Test Configuration

Setup for Client with injection at the Master

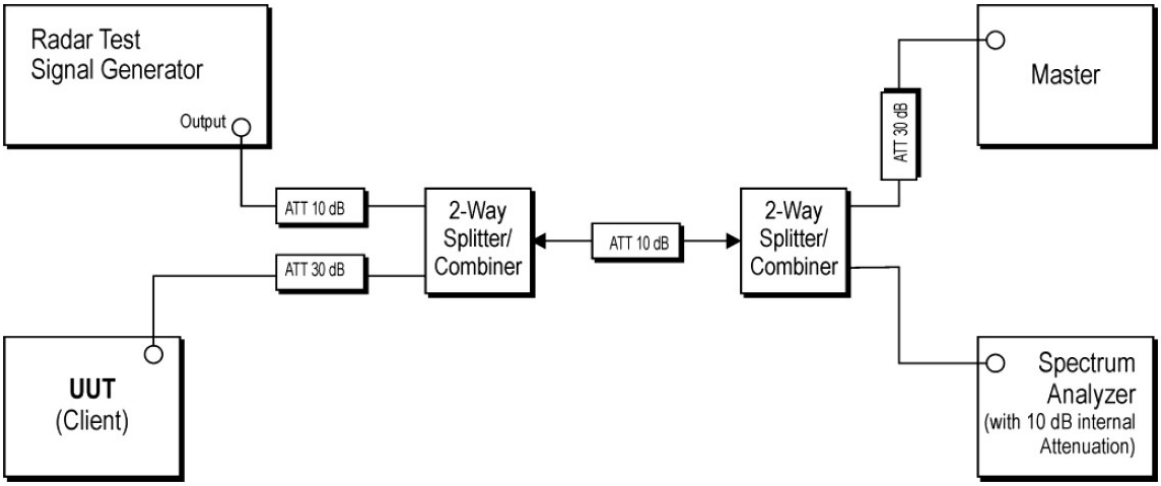

Test Procedure

1. The radar pulse generator is setup to provide a pulse at frequency that the master and client are operating. A type 0 radar pulse with a 1us pulse width and a 1428us PRI is used for the testing.
2. The vector signal generator is adjusted to provide the radar burst (18 pulses) at the level of approximately -61dBm at the antenna port of the master device
3. A trigger is provided from the pulse generator to the DFS monitoring system in order to capture the traffic and the occurrence of the radar pulse.
4. EUT will associate with the master at channel. The file “iperf.exe” specified by the FCC is streamed from the PC 2 through the master and the client device to the PC 1 and played in full motion video using Media Player Classic Ver. 6.4.8.6 in order to properly load the network for the entire period of the test.
5. When radar burst with a level equal to the DFS Detection Threshold +1dB is generated on the operating channel of the U-NII device. At time T0 the radar waveform generator sends a burst of pulse of the radar waveform at Detection Threshold +1dB.
6. Observe the transmissions of the EUT at the end of the radar Burst on the Operating Channel Measure and record the transmissions from the UUT during the observation time (Channel Move Time). One 15 seconds plot is reported for the Short Pulse Radar Type 0. The plot for the Short Pulse Radar Types start at the end of the radar burst. The Channel Move Time will be calculated based on the zoom in 600ms plot of the Short Pulse Radar Type
7. Measurement of the aggregate duration of the Channel Closed Transmission Time method. With the spectrum analyzer set to zero span tuned to the center frequency of the EUT operating channel at the radar simulated frequency, peak detection, and max hold, the dwell time per bin is given by: Dwell (0.3ms) =S (12000ms) / B (4000); where Dwell is the dwell time per spectrum analyzer sampling bin, S is sweep time and B is the number of spectrum analyzer sampling bins. An upper bound of the aggregate duration of the intermittent control signals of Channel Closing Transmission Time is calculated by: C (ms)= N X Dwell (0.3ms); where C is the Closing Time, N is the number of spectrum analyzer sampling bins (intermittent control signals) showing a U-NII transmission and Dwell is the dwell time per bin.
8. Measurement the EUT for more than 30 minutes following the channel move time to verify that no transmission or beacons occur on this channel.

Test Mode

Please refer to the clause 2.4.

Test Results

☐ **Passed** ☒ **Not Applicable**

**********THE END**********