Thank you for purchasing the X Rocker! we know you will enjoy your X Rocker experience as much as we do.

Welcome to the world of interactive audio. WIth your new X Rocker you can now not only hear your music but achually FEEL it. Whether you are listening to music, watching a movie, or playing a game, you will become a part of it.

Get ready to experience sound as you never have!

Do not return this product to the store.
Email service@acebayou.com or call
866-969-2603/931.359.2603 for trouble shooting advice.

IMPORTANT: You must keep your original retall receipt as proff of purchase.

HAVE THIS ITEM NUMBER READY WHEN CONTACTING CUSTOMER SERVICE:5150001

XRocker™ BY Ace Bayou Corp.

don't just sit there...start rocking!

FEATURES

A- Control Panel

- A1-Bass Volume Adjustment
- A2-Volume Adjustment
- A3-Audio Input Jack
- A4-Audio Output Jack for linking multiple chairs
- A5-Wire mode / Bluetooth mode Switch
- A6-USB Power Port
- A7-Power On/Off Switch
- A8-9V DC Power Input Jack
- A9-Power Indicator Light
- A10-MP3 Input Jack
- A11-Headphone Jack
- A12-Bluetooth indicator light

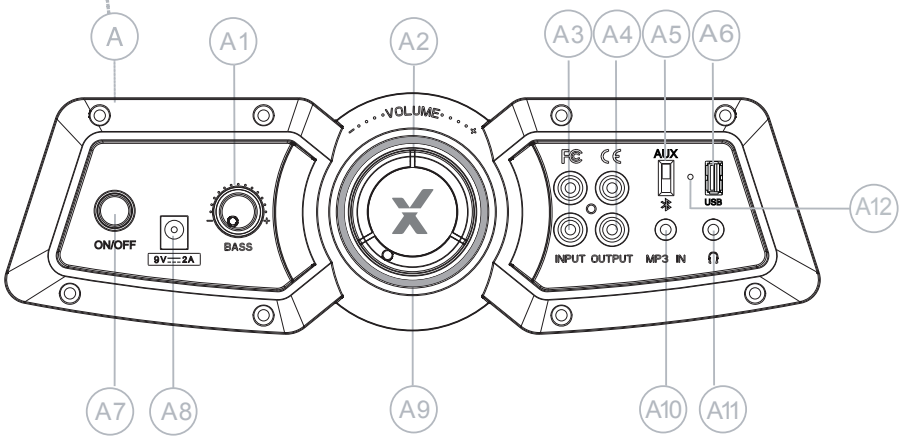

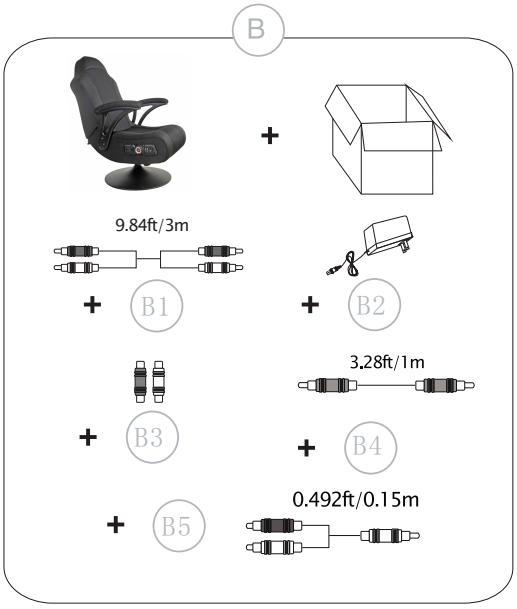

*SOME PARTS MAY VARY SLIGHTLY

B- Accessories Supplied

- B1-3m RCA Stereo to RCA stereo plug cable(1 PC)
- B2-INPUT:100-240V AC 50/60Hz
  OUTPUT:9 V DC 2000mA Main POWER Adapter.
- B3-RCA female to female barrel adapter (2 PCS)
- B4-1m 3.5mm stereo male to 3.5mm stereo male cable (1PC)
- B5-0.15m RCA stereo male to 3.5mm stereo male cable (1PC)

C- Audio Specifications

Ⅰ.The unit specifications:

Signal-to-Noise Ratio(Amplifier):Subwoofer:>65dB
Satellite:>60dB

Frequency Response: 60Hz~15kHz

Distortion: Subwoofer: <4% (F=100Hz)
Satellite:<1% (F=1kHz)

Input: DC 9V/2A

Need Help? Email: service@acebayou.com Web:www.thexrocker.com Phone: 866.969.2603

FUNCTIONS:

- Foldable constuction for ease of storage and portability.
- Side control panel with volume, bass control, input/output jacks, and band switch.
- Ergonomic design with full back support.
- Headphone jack for personal use.
- Easy to clean heavy duty uphonlstery grade mesh cover.
- Play your Bluetooth device through your X Rocker.
- Control your music from your Bluetooth device.
- Connect device without ever going near X Rocker.

ATTENTIONS:

- USB port only can be used to charge electronic devices.
- Bluetooth connection has a 30 feet / 10 meters. range of virtually unlimited wireless listening in your home.
- When using in wire mode, Please keep the band to “AUX” (A5)
- When using in Bluetooth mode, Please keep the band to “ ” (A5)

READ BEFORE USAGE:

- Always make sure hinge is locked before moving.
- Always make sure hinge is locked before sitting in the chair.
- Excessive use of audio equipment could lead to hearing loss.
- Excessive sound pressure from earphones and headphones can cause hearing loss.
- Children under the age of 13 should not use this product without adult supervision.
- Strictly for indoor use. Do not expose to direct sunlight, moisture or extreme temperatures.
- If the cover becomes wet, disconnect the power immediately and don’t use until it is completely dry.
- Do not attempt to remove the cover or any components. Removal of the cover or tampering with components puts you at risk for injury or death from electrical shock.

SET UP:

1. Lift X Rocker out of box.
2. Keep the chair in the folded position and place it on the floor so that back side of the chair is touching the floor and the bottom of the seat is facing up.
3. Review the set up diagrams to familiarize yourself with the X Rocker’s components, accessories, and set-up.
4. Please completes steps 1-6 to assemble the chair.
5. Unpack the power adapter and connect it to the main power outlet, then to the power jack on the control panel.(A8)
6. Press the power button and confirm that the power indicator light (A9) is on. In bluetooth mode, Please keep the band to” ”(A5), confirm that its indicator light is flashing.(A12)
7. Follow the connection diagrams. They show how to connect the X Rocker to the audio source of your choice .
8. Adjust the bass and volume levels to your preference---start rocking.

More information please see additional assembly instruction!

WIRE MODE CONNECTION GUIDE

DIAGRAM 1 GAMING SYSTEMS

XBOX™, XBOX360™, XBOX ONE™, Wii, PLAYSTATION 3™, PLAYSTATION 4™, etc.

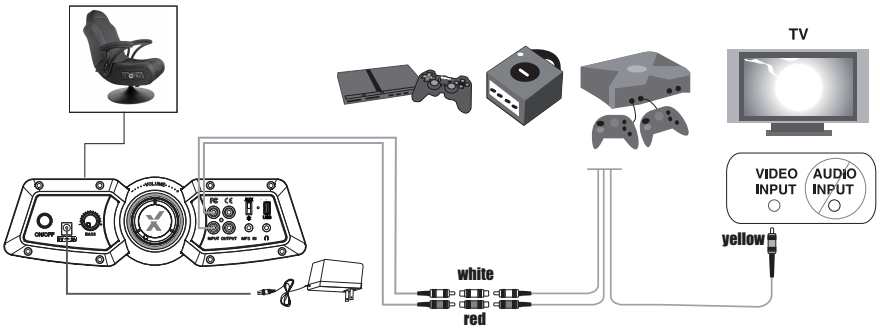

DIAGRAM 2 HOME THEATER & SATELLITE

TV / DVD / VCR / SATELLITE / RECEIVER

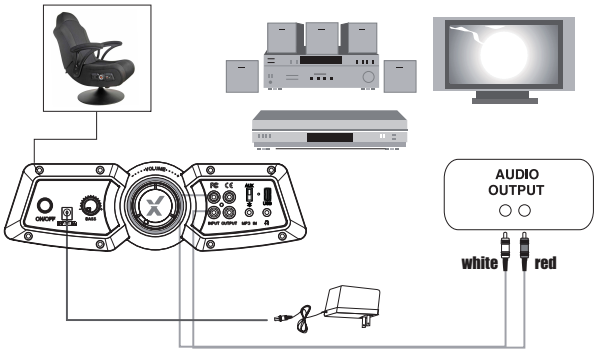

DIAGRAM 3 PORTABLE DEVICES

MP3/CD/DVD/GAMES/PSP/IPOD/IPAD

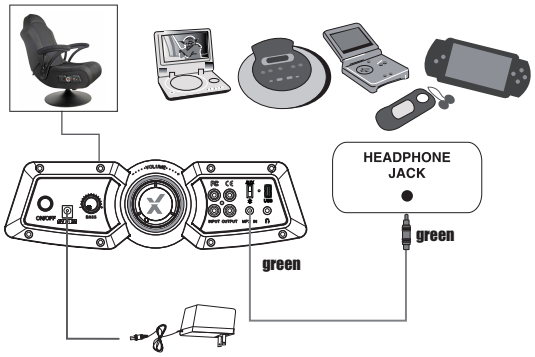

DIAGRAM 4 MULTI-USER CONNECTION

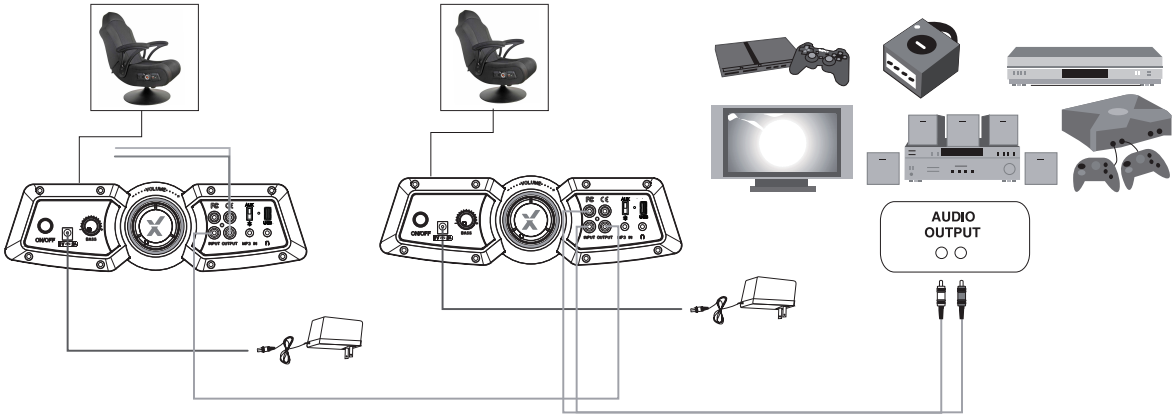

Need Help? Email: service@acebayou.com Web:www.thexrocker.com Phone: 866.969.2603

BLUETOOTH MODE CONNECTION GUIDE

DIAGRAM | Bluetooth Device

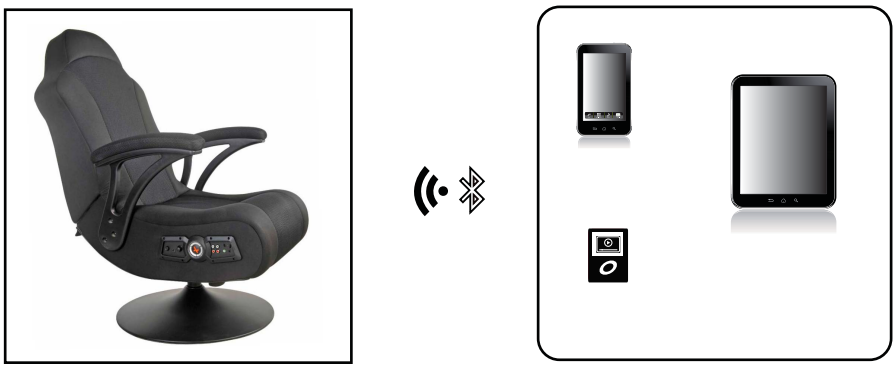

Pairing Your X Rocker:

Only 1 device can be paired to X Rocker at a time, to pair X Rocker with a mobile device, refer to the Bluetooth paring procedures in corresponding mobile phone or music player user manual and follow the steps below:

- Make sure there are no wires or leads that are inserted into your device before using Bluetooth.
- Make sure the band(A5) is on "✱" position, and blue Bluetooth indicator light is flashing on the control panel.
- Select the device name "X Rocker" on the screen of your device, add the unit to your device's paired device list.
- When pairing is successful, the blue LED indicator(A12) will stay on, if you play music, the indicator(A12) will be slowly flashing.
- Confirm the connection on your device.
- Your X ROCKER is now connected and ready to play music! Just play music on your device as you normally would and the sound will come out of your X Rocker!

Keep in mind that X Rocker has a 30 feet / 10 meters range.

Reconnecting Your Device:

If you move out of range, or turn off the Bluetooth feature on your mobile device, X Rocker will disconnect from your device. To reconnect, simply access the Bluetooth Manager on your device and select "X Rocker" device listed.

Changing Connected Device:

If you want to switch from one device to another, follow the steps below:

- End the existing Bluetooth connection with the connected device, access the Bluetooth Manager and disable the Bluetooth function of the device.
- The X Rocker can now be connected to a different device.
- Follow the directions in "PAIRING YOUR X ROCKER" to connect a different device.

Out of Range or Lost Signal:

If the music device is out of range(beyond 30 feet / 10 meters) of the X Rocker, or there is something blocking the Bluetooth signal, the LED light will turn off to indicate that the Bluetooth connection with the music device has been lost.
To avoid a lost connection:

- Move the music device back into the range(within 30 feet / 10 meters), and/or make sure there is a clear line of sight and that there are no obstructions between the X Rocker and the music device.
- Within 30 seconds, the connection will automatically be re-established and the blue LED light will turn on.
  For your own device, you need to re-start your music player .
- If the connection is lost for more than 30 seconds, the connection will need to be re-established, follow the directions in "Reconnecting Your Device".

Bluetooth License:

The Bluetooth® word mark and logos are registered trademarks owned by Bluetooth SIG Inc. and any use of such marks by Ace Bayou Corporation is under license. Other trademarks and trade names are those of their respective owners.

TROUBLE SHOOTING

- Unable to connect to game console -

Most game consoles are shipped from the manufacturers with an Audio/Video RCA cable. The A/V RCA cable has three RCA plugs: a video plug (yellow) and two audio plugs (red and white). If your gaming console came with an A/V RCA cable. please follow the instructions supplied by the manufacturer for setting it up and connecting it to the TV. Please note that you must leave the red and white audio jacks on the A/V cable UNCONNECTED. Once the console is properly connected to your TV, plesse follow the diagram in the illustrated X Rocker Set-up guide to connect the gaming console to the X Rocker. If your gaming console was shipped with a coaxial cable, instead of an A/V RCA cable, you must follow an alternate set-up procedure (coaxial cable is the same type of cable that is used to connect a VCR to a TV). You will quickly recognize if your gaming console uses this type of cable. It connects the gaming console directly to the television and carries both the audio and video signal over a single cable. If your gaming console uses a coaxial cable, you CAN NOT connect it directly to the X Rocker . Instead, you must

Use an intermediary A/V device (such as a TV,VCR, DVD, TiVO, etc)

a. Connect your gaming console to the intermediary A/V device via the coaxial cable.
b. Connect the X Rocker to the'Audio Out'jack on the intermediary A/V device.
c. Follow diagram 2 in the X Rocker set-up guide to connect the X Rocker to the intermediary A/V device and finalize the setup.

If your gaming console is attached to an HD TV with an HDMI cable. You will need to connect the chair using either the audio out jacks on the back of the TV or by plugging into the headphone jack on the front of the TV.

- Unable to hear any sound from the X Rocker -

1. Check to ensure that the power adapter is properly connected to the power jack (A8). When properly connected,the indicator light (A9) on the control panel should light up when the power switch (A7) is turned on. If the indicator light (A9) does not light up, try to use another power outlet in your home.
2. Make sure the power unit is turned on and indicator light on the control panel is lit. If it is not, please press the power switch on the control panel.
3. When you use wire mode, make sure the band (A5) is on “AUX” position.
4. When you use Bluetooth mode:
   - Make sure that therez is no wired line that insert in your device before using bluetooth.
   - Make sure the band(A5) is on “ ” position,
   - Make sure the volume of X Rocker and the volume of mobile music device is set to a comfortable listening level.
   - Make sure you are within range of the X Rocker and your mobile music device is connected via Bluetooth technology with the X Rocker.
5. Once you have successfully completed 1.-4. please review the X Rocker illustrated set-up guide. Double check all audio connections. Finally, check that the volume on the hand remote is turned to an audible level on both the TV and the chair. If you have completed 1-5 and still do not hear sound, try connecting another audio source (CD player, television, VCR or game console) and go through the steps again. Still not working? Help is as easy as 1,2,3:
   1). Go to www.thexrocker.com for FAQ answers.
   2). Email service@acebayou.com
   3). Call our customer service department at 866.969.2603 or 931.359.2603.Office hours are 8:30am to 5:00pm central standard time.

   DO NOT SHIP ANYTHING TO US WITHOUT CONTACTING US FIRST. DO NOT SHIP ANY PARTS OR WHOLE UNITS TO THIS ADDRES FOR REPAIR WITHOUT OUR PERMISSION.

   For service assistance, product information, or to locate a dealer nearest you please call or write to:
   Ace Bayou Corp
   PO Box 1853
   Lewisburg, TN37091
   1-866-969-2603
   Service@acebayou.com

WARRANTY PAGE

Limited Warranty:

Ace Byou warrants this product (including any accessories) against defects in material and workmanship for a period of 90 days from the date of purchase This warranty is enforceable only by the original purchaser.
ALL DAMAGED OR MISSING PARTS MUST BE REPORTED WITHIN 14 DAYS OF PURCHASE.

This warranty covers all defects in material and workmanship in this product, but DOES NOT COVER the following:

1. Damage, deterionration or malfunction resulting from:
   a. Acts of God, accident, misuse, abuse, negligence, improper installation, maintenance or operation, or failure to follow the instructions contained in this owner's manual.
   b. Any damage in the shipment of the product. (Claims must be presented to the carrier.)
   c. Repair, attempted repair, or modifications by anyone other than the Ace Bayou Service Center.
2. Any unit which has been modified or attempted to be modified or altered in any way whatsoever.
3. Normal wear and periodic maintenance.
4. Any unit used for industrial or commercial purposes (including rental).
5. Products sold AS IS or WITH ALL FAULTS,or consumables (such as fuses, batteries, etc)
6. Customer installation, set up adjustments, or signal reception problems.

Ace Bayou will repair or replace (at its discretion) units covered by this warranty without charge to the consumer for labor or materials. YOU ARE RESPONSIBLE FOR INITIAL SHIPPING CHARGES. However, we will pay the return shipping charges to any destination within the usa if repairs are covered by the warranty.

REPAIR OR REPLACEMENT AS PROVIDED UNDER THIS WARRANTY IS THE EXCLUSIVE REMEDY OF THE CONSUMER. ACE BAYOU SHALL NOT BE LIABLE FOR ANY INCIDENTAL OR CONSEQUENTIAL DAMAGES FOR BREACH OF ANY EXPRESSED OR IMPLIED WARRANTY ON THIS PRODUCT. EXCEPT TO THE EXTENT PROHIBITED BY APPLICABLE LAW, ANY IMPLIED WARRANTIES, INCLUDING WARRANTIES OF MERCHANTABILITY ADN FITNESS FOR A PARTICULAR PURPOSE, ARE LIMITED IN DURATION TO THE LENGTH OF THIS WARRANTY.

Some states do not allow the exclusion or limitation of incidental or consequential damages, or allow limitations on how long an implied warranty lasts, so the above limitations may not apply to you.

Caution: The user is cautioned that changes or modifications not expressly approved by the party responsible for compliance could void the user's authority to operate the equipment.

FCC NOTE: This equipment has been tested and found to comply with the limits for a Class B digital device, pursuant to Part 15 of the FCC Rules. These limits are designed to provide reasonable protection against harmful interference in a residential installation. This equipment generates, uses and can radiate radio frequency energy and, if not installed and used in accordance with the instructions, may cause harmful interference to radio communications. However, there is no guarantee that interference will not occur in a particular installation.

If this equipment does cause harmful interference to radio or television reception, which can be determined by turning the equipment off and on, the user is encouraged to try to correct the interference by one or more of the following measures:

-- Reorient or relocate the receiving antenna.
-- Increase the separation between the equipment and receiver.
-- Connect the equipment into an outlet on a circuit different from that to which the receiver is connected.
-- Consult the dealer or an experienced radio/TV technician for help.

FCC Radiation Exposure Statement:
This equipment complies with FCC radiation exposure limits set forth for an uncontrolled environment.
This transmitter must not be co-located or operating in conjunction with any other antenna or transmitter.

IC
This device complies with Industry Canada licence-exempt RSS standard(s). Operation is subject to the following two conditions:
(1) this device may not cause interference, and
(2) this device must accept any interference, including interference that may cause undesired operation of the device.

Le présent appareil est conforme aux CNR d'Industrie Canada applicables aux appareils radio exempts. L'exploitation est autorisée aux deux conditions suivantes :
(1) l'appareil ne doit pas causer d'interférences, et
(2) l'utilisateur de l'appareil doit accepter tout brouillage radioélectrique subi, même si le brouillage est susceptible d'en compromettre le fonctionnement.

IC Radiation Exposure Statement:
This equipment complies with Canada radiation exposure limits set forth for uncontrolled environments.
This transmitter must not be co-located or operating in conjunction with any other antenna or transmitter.

Déclaration d'IC sur l'exposition aux radiations:
Cet équipement est conforme aux limites d'exposition aux radiations définies par le Canada pour des environnements non contrôlés.
Cet émetteur ne doit pas être installé au même endroit ni utilisé avec une autre antenne ou un autre émetteur.