Trane XL824 Connected Control

TCONT824 Installation Guide

ALL phases of this installation must comply with NATIONAL, STATE AND LOCAL CODES

WORKS WITH NEXIA™ HOME INTELLIGENCE

IMPORTANT — This Document is customer property and is to remain with this unit.

These instructions do not cover all variations in systems or provide for every possible contingency to be met in connection with the installation. Should further information be desired or should particular problems arise which are not covered sufficiently for the purchaser's purposes, the matter should be referred to your installing dealer or local distributor.

18-HD72D1-11-EN

Contents

1. Safety 2
2. Product Specifications 3
3. General Information 3
3.1 Overview 3
3.2 Contents 3
3.3 Accessories 3
4. Installation 4
4.1 Location 4
4.2 Network Connections 4
4.3 Mounting 4
4.4 Wiring 5
4.5 Heat/Cool Applications 7
4.6 Heat Pump Applications 16
4.7 Dual Fuel Applications 23
5. System Setup 26
5.1 Power-Up Sequence 26
5.2 Guided Setup Wizards 26
5.3 Smart Optimization 26
5.4 Installer Setup Screens 27
5.4.1 Group 1 Standard Settings 27
5.4.2 Group 2 Equipment Settings 27
5.4.3 Group 3 Sensor Settings 27
5.4.4 Group 4 Accessories Settings 28
5.4.5 Group 5 Comfort Settings 29
5.4.6 Group 6 Airflow Settings 30
5.4.7 Group 7 Lockout Settings 31
5.5 Service Reminders 31
5.6 Dealer Code 31
5.7 Software Updates 31
6. Basic Operation 32
6.1 PI Control 32
6.2 Load Value - Heating 32
6.3 Load Value - Cooling 32
6.4 Duty Cycles 32
6.5 Overshoot Clamp 32
6.6 Stage Thresholds 33
6.7 Stage Inhibits 33
6.8 Fan Mode 34
6.9 Air Cleaner Mode 34
7. Advanced Operation 35
7.1 Control Response Rate 35
7.2 Dehumidification 35
7.3 Dehumidifier Operation 35
7.4 Dual Fuel Operation 35
7.5 Lockouts 36
7.6 Humidifier Operation 37
7.7 Recovery 37
7.7.1 Aggressive Recovery 37
7.7.2 Heating Aggressive Recovery 37
7.8 Ventilation Operation 37
7.9 Warm Air Discharge 37
7.10 Wet Heat (Hydronic) Operation 37
8. Diagnostic Tools 38
8.1 Test Modes 38
8.2 Save Logs 38
8.3 Diagnostics 38
8.4 History 38
8.5 System Report 39
8.6 Restore Factory Defaults 39
9. Troubleshooting 40
10. Notices 41
10.1 FCC Notice 41
10.2 IC Notice 41

1. Safety

NOTE: Use 18-gauge color-coded thermostat cable for proper wiring. Shielded cable is not typically required.

Keep this wiring at least one foot away from large inductive loads such as Electronic Air Cleaners, motors, line starters, lighting ballasts and large distribution panels.

⚠ WARNING

This information is intended for use by individuals possessing adequate backgrounds of electrical and mechanical experience. Any attempt to repair a central air conditioning product may result in personal injury and/or property damage. The manufacturer or seller cannot be responsible for the interpretation of this information, nor can it assume any liability in connection with its use.

Failure to follow these wiring practices may introduce electrical interference (noise) which can cause erratic system operation.

All unused thermostat wire to be grounded at indoor unit chassis ground only. Shielded cable may be required if the above wiring guidelines cannot be met. Ground only one end of the shield to the system chassis.

⚠ WARNING

LIVE ELECTRICAL COMPONENTS!
During installation, testing, servicing, and troubleshooting of this product, it may be necessary to work with live electrical components. Failure to follow all electrical safety precautions when exposed to live electrical components could result in death or serious injury.

2. Product Specifications

SPECIFICATION	DESCRIPTION
Product Model	TCONT824
Product	XL 824 Connected Control
Size	5-1/2” x 3-3/8” x 1” (WxHxD)
Configurations	Heat Pump, Heat/Cool, Dual Fuel, Heat Only, Cooling Only
Maximum Number of Stages	5 Stages Heat, 2 Stages Cooling
Storage/Operating Temperature	-40°F to 175°F, 5% to 95% RH non-condensing
Input Power	24VAC
Power Consumption	7VA*
Wire Usage	18 AWG
System Modes	Auto, Heating, Cooling, Off, Emergency Heat
Fan Modes	Auto, On, Circulate
Cooling Setpoint Temperature Range	60°F to 99°F, 1°F resolution
Heating Setpoint Temperature Range	55°F to 90°F, 1°F resolution
Indoor Temperature Display Range	-40°F to 122°F
Outdoor Temperature Display Range	-40°F to 140°F
Indoor Humidity Display Range	0% to 100%, 1% resolution
Minimum Cycle Off Time Delay	Compressor: 5 minutes, Indoor Heat: 1 minute

*On every application, 24VAC loads should be reviewed to be sure the indoor unit control power transformer is adequately sized.

3. General Information

3.1 Overview

The 824 Connected Control has a 4.3” color touch screen and offers a full-featured and easy-to-use interface. From individual daily schedules to remote access, the 824 is one of the most advanced 24VAC Controls available.

3.2 Contents

- 1-Control
- 1-Sub-base
- 2-#6 18X1 Phillips slotted head mounting screws
- 2-#6x1 Nylon Drywall Anchors
- 1-Installation Guide
- 1-Quick Start Guide
- RJ-45 Holder and Screw
- 1-USB “On-the Go” Adapter Cable (Micro USB plug to Standard USB receptacle)

3.3 Accessories

- Wired Remote Indoor Sensor (ZZSENSAL0400AA)
- Wired Remote Outdoor Sensor (BAYSEN01ATEMPA)
- Bonnet Thermostat model THT1248 (BAYSEN03ATEMPAA)

4. Installation

4.1 Location

The 824 is designed for installation in climate controlled living spaces. Place the unit in a central location with good circulation.

For proper temperature sensing, avoid exposing the 824 to heat radiated from lamps, sun light, fireplaces or any other radiant heat source.

Avoid locations close to windows, behind doors or alcoves with poor air circulation, adjoining outside walls, or doors that lead to the outside.

Select a location that prevents the 824 from being directly exposed to air currents from supply registers or ceiling fans.

Mount the Control on a section of interior wall that does not contain hot or cold water pipes or duct work.

Important: The 824 Control utilizes a 4.3” color touch screen. This screen generates heat which is vented out the top of the Control utilizing natural convection. If an air source is directed at or from above, heat from the screen can be trapped within the Control and can cause the indoor temperature to be biased. (Refer to Figure 1 on page 4.)

FIGURE 1. PLACEMENT OF THE 824

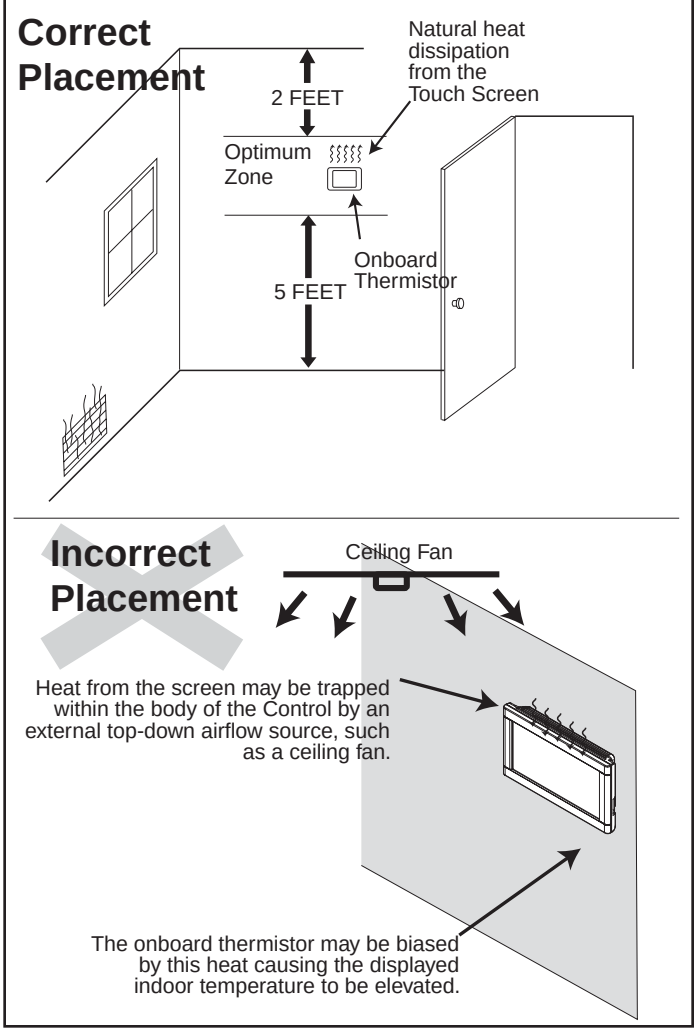

4.2 Network Connections

To take advantage of the full range of features on the 824 Control, it should be connected to the Internet. This is possible using either a wireless or a wired connection.

Wireless Connections

If the 824 Control will be connected to the Internet using the built-in wireless feature, choose a mounting location that ensures adequate signal strength from the Internet router.

Tips to Help Maximize Signal Strength:

- Do not mount the Control more than 30 feet from the wireless router
- There should be no more than three interior walls between the Control and the router.
- Do not mount the Control in areas where electromagnetic emissions from other devices, appliances or wiring can interfere with the Control’s communication. (i.e. wireless phones, security systems, wireless Internet cameras).
- Do not mount the Control in recessed areas, near metal objects, or near structures. (i.e. doors, appliances, entertainment centers or shelving units).
- Do not mount the Control closer than 2 inches to any pipes, duct work, or other metal obstructions.
- Do not have metal obstructions, concrete or brick walls between the Control and the router.

Refer to the 824 User Guide for additional information on connecting the 824 to the Internet.

Wired Connections

The 824 Control may be connected to the Internet using its built-in RJ-45 connector. When using a wired connection, verify that a CAT 5 or better Ethernet cable with a male RJ-45 connector is present from the router to the Control.

4.3 Mounting

Follow these steps to mount the 824 Control to the wall.

1. Turn OFF all power to heating and cooling equipment.
2. If an existing thermostat is being replaced:
   a. Remove the existing thermostat from the wall.
   b. Record color and terminal marking of each wire.
   c. Disconnect the wires from the existing thermostat being careful not to allow them to fall back into the wall.
3. Carefully pry the Sub-base away from the 824 Control using a small flat-blade screwdriver. Note that the tight fit is normal and ensures that the Control is held securely to the Sub-base when mounted on the wall.
4. Route the wires through the opening on the Sub-base.
5. If using a wired Internet connection, route the Ethernet cable through the opening.

6. Place the Sub-base against the wall in the desired location and mark the wall through the mounting holes. If you are using a wired Internet connection, be sure to mark the cutout for the RJ-45 connector (see Figure 2 on page 5).
7. Drill the holes in the wall where marked.

If you are using a wireless Internet connection, skip to step 9.

8. When using a wired Ethernet connection, follow these step and refer to Figure 3 on page 5.
   a. With the Sub-base and RJ-45 holder oriented as shown, press the holder into the Sub-base.
   b. Slide the holder to the right so it snaps in place.
   c. Secure the holder with the provided screw.
   d. Insert the RJ-45 Connector into the RJ-45 holder until it snaps into place.
9. Mount the Sub-base to the wall using included mounting screws and drywall anchors. An optional mounting hole is available for more secure mounting, if needed. Make sure all wires extend through the hole in the Sub-base see Figure 4 on page 5.

4.4 Wiring

1. Adjust the length and position of each wire to reach the proper terminal on the connector block of the Sub-base. Strip 1/4” of insulation from each wire. Do not allow adjacent wires to short together when connected.
2. Match and connect control wires to the proper terminals on the connector block. Refer to Field Wiring Diagrams included in this document.
3. Push excess wire back into the wall and seal the hole to prevent air leaks. NOTE: Air Leaks in the wall behind the Control can cause improper operation.
4. Attach the Control to the Sub-base.
5. Turn ON power to the heating and cooling equipment.

FIGURE 2. MARK THE MOUNTING HOLES

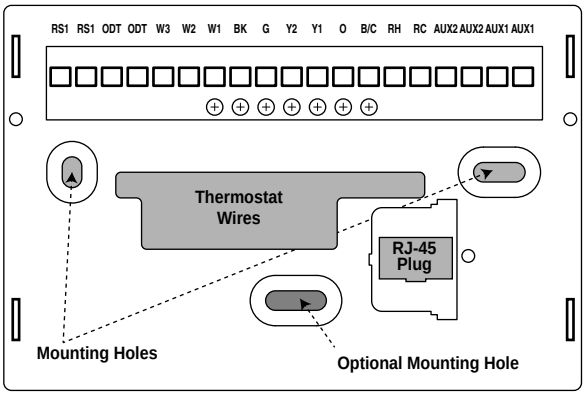

FIGURE 3. ATTACH RJ-45 HOLDER TO SUB-BASE

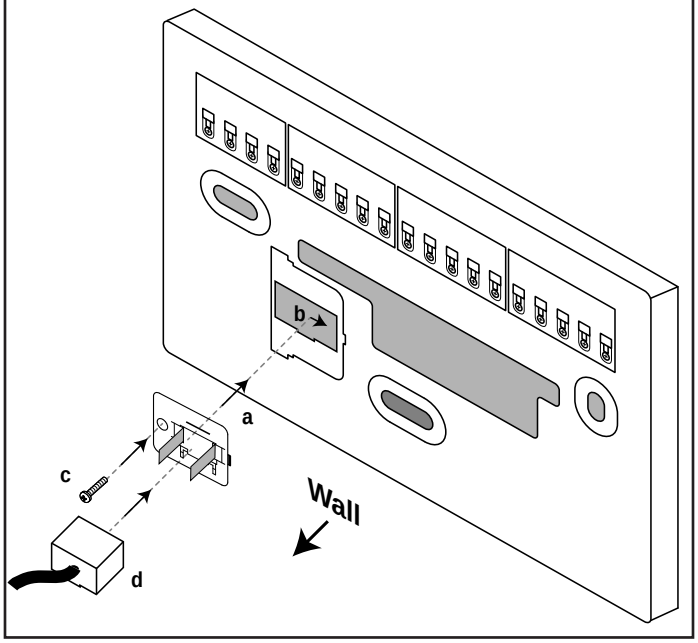

FIGURE 4. MOUNT THE SUB-BASE TO THE WALL

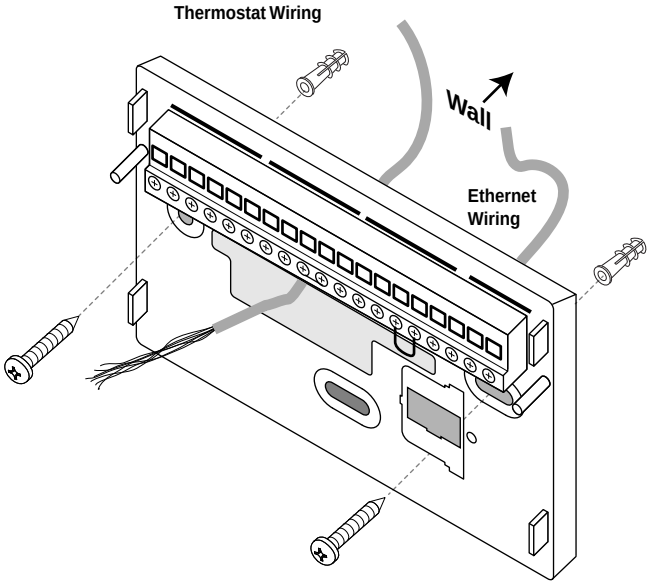

Field Wiring Connection Diagrams

Heat/Cool Diagrams

PAGE	DIAGRAM	DESCRIPTION
7	DIAGRAM 1	1 OR 2 STAGE COOLING W/TAM7 MODEL VARIABLE SPEED AIR HANDLER
7	DIAGRAM 2	1 STAGE COOLING W/GAM5A OR TAM4 MODEL AIR HANDLER
8	DIAGRAM 3	1 STAGE COOLING W/GAM5B MODEL AIR HANDLER
8	DIAGRAM 4	2 STAGE COOLING W/GAM5B MODEL AIR HANDLER
9	DIAGRAM 5	1 STAGE COOLING W/GAF2-S MODEL AIR HANDLER
9	DIAGRAM 6	1 STAGE COOLING W/GAF2-36M MODEL AIR HANDLER
10	DIAGRAM 7	1 STAGE COOLING W/GAT2 & GAM2 MODEL AIR HANDLER
10	DIAGRAM 8	1 STAGE COOLING W/TEM3 MODEL AIR HANDLER
11	DIAGRAM 9	1 STAGE COOLING W/TEM4 AIR HANDLER
11	DIAGRAM 10	1 OR 2 STAGE COOLING W/TEM6 AIR HANDLER
12	DIAGRAM 11	1 STAGE W/COOLING GAS FURNACE
12	DIAGRAM 12	1 OR 2 STAGE COOLING W/VARIABLE SPEED GAS FURNACE
13	DIAGRAM 13	1 OR 2 STAGE COOLING WITH S9V2 FURNACE
13	DIAGRAM 14	PACKAGE 1 OR 2 STAGE HEAT/COOL W/VARIABLE SPEED BLOWER
14	DIAGRAM 15	PACKAGE 1 STAGE HEAT/COOL W/NON-VARIABLE SPEED BLOWER
14	DIAGRAM 16	AMERISTAR 1 STAGE COOLING

Heat Pump Diagrams

PAGE	DIAGRAM	DESCRIPTION
15	DIAGRAM 17	1 OR 2 STAGE HEAT PUMP W/TAM7 MODEL AIR HANDLER
15	DIAGRAM 18	1 STAGE HEAT PUMP W/GAM5A OR TAM4 MODEL AIR HANDLER
16	DIAGRAM 19	1 STAGE HEAT PUMP W/GAM5B MODEL AIR HANDLER
16	DIAGRAM 20	2 STAGE HEAT PUMP W/GAM5B MODEL AIR HANDLER
17	DIAGRAM 21	1 STAGE HEAT PUMP W/GAF2-S MODEL AIR HANDLER
17	DIAGRAM 22	1 STAGE HEAT PUMP W/GAF2-36M MODEL AIR HANDLER
18	DIAGRAM 23	1 STAGE HEAT PUMP W/GAT2 & GAM2 MODEL AIR HANDLER
18	DIAGRAM 24	1 STAGE HEAT PUMP W/TEM3 MODEL AIR HANDLER
19	DIAGRAM 25	1 STAGE HEAT PUMP W/TEM4 AIR HANDLER
19	DIAGRAM 26	1 OR 2 STAGE HEAT PUMP W/TEM6 VARIABLE SPEED AIR HANDLER
20	DIAGRAM 27	PACKAGE 1 OR 2 STAGE HEAT PUMP W/VARIABLE SPEED BLOWER
20	DIAGRAM 28	PACKAGE 1 STAGE HEAT PUMP W/NON-VARIABLE SPEED BLOWER
21	DIAGRAM 29	AMERISTAR 1 STAGE HEAT PUMP

Dual Fuel Diagrams

PAGE	DIAGRAM	DESCRIPTION
22	DIAGRAM 30	1 OR 2 STAGE HEAT PUMP W/VARIABLE SPEED GAS FURNACE
22	DIAGRAM 31	1 STAGE HEAT PUMP W/NON-VARIABLE SPEED GAS FURNACE
23	DIAGRAM 32	1 OR 2 STAGE HEAT PUMP W/S9V2 FURNACE
23	DIAGRAM 33	PACKAGE 1 OR 2 STAGE DUAL FUEL W/VARIABLE SPEED BLOWER

4.5 Heat/Cool Applications

Diagram 1 - 1 or 2 Stage Cooling w/TAM7 Model Variable Speed Air Handler

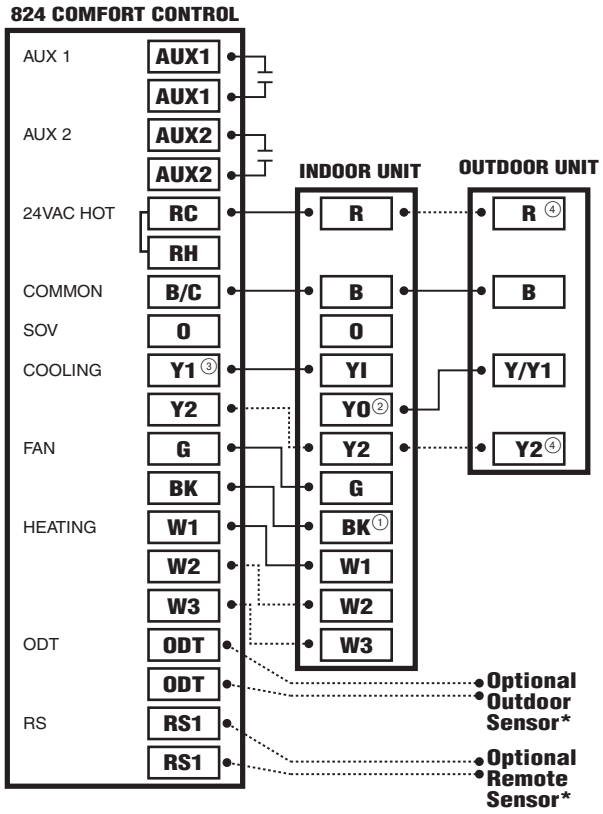

NOTES:

1. Cut and remove the BK jumper at the indoor unit AFC Board
2. YI and YO connections must be made as shown for freeze protection and internally mounted condensate overflow circuits to function properly
3. If a 3rd party overflow condensate switches are installed, wire between Y1 of the 824 and YI of the airflow control board
4. R and Y2 connections at outdoor unit are required only for two stage units

*Caution: Do not run Outdoor/Remote sensor wires in the same bundle with HVAC wires. Also, keep away from high voltage wiring to avoid interference.

Diagram 2 - 1 Stage Cooling w/GAM5A or TAM4 Model Air Handler

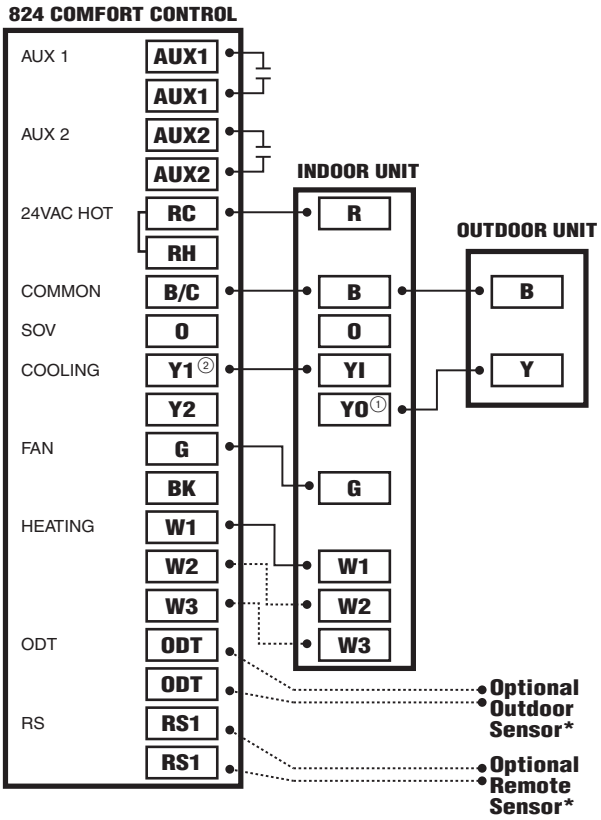

NOTES:

1. YI and YO connections must be made as shown for freeze protection and internally mounted condensate overflow circuits to function properly
2. If 3rd party overflow condensate switches are installed, wire between Y1 of the 824 and YI of the air handler

*Caution: Do not run Outdoor/Remote sensor wires in the same bundle with HVAC wires. Also, keep away from high voltage wiring to avoid interference.

Diagram 3 - 1 Stage Cooling w/GAM5B Model Air Handler

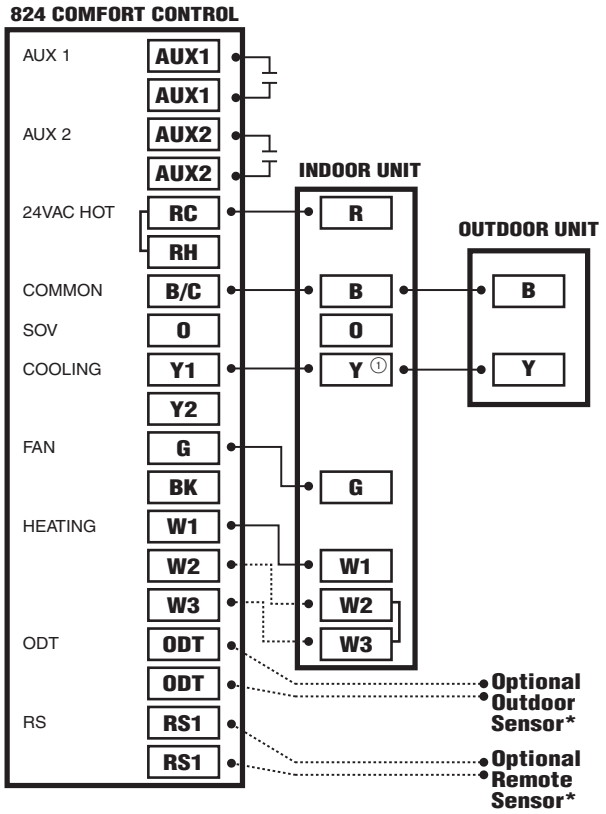

NOTES:
1. Y terminal must be connected at indoor unit for selected compressor air flow

*Caution: Do not run Outdoor/Remote sensor wires in the same bundle with HVAC wires. Also, keep away from high voltage wiring to avoid interference.

Diagram 4 - 2 Stage Cooling w/GAM5B Model Air Handler

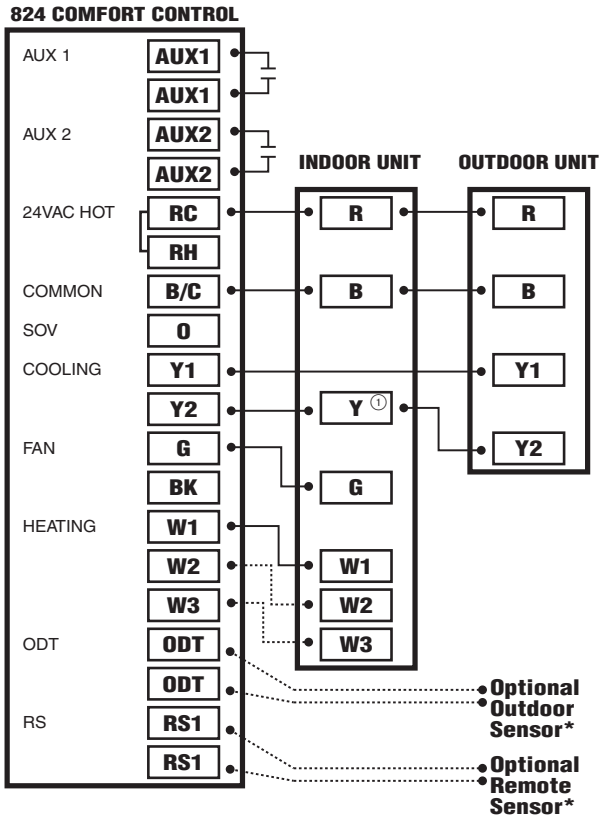

NOTES:
1. Y terminal must be connected at indoor unit for selected compressor air flow

*Caution: Do not run Outdoor/Remote sensor wires in the same bundle with HVAC wires. Also, keep away from high voltage wiring to avoid interference.

Diagram 5 - 1 Stage Cooling w/GAF2-S Model Air Handler

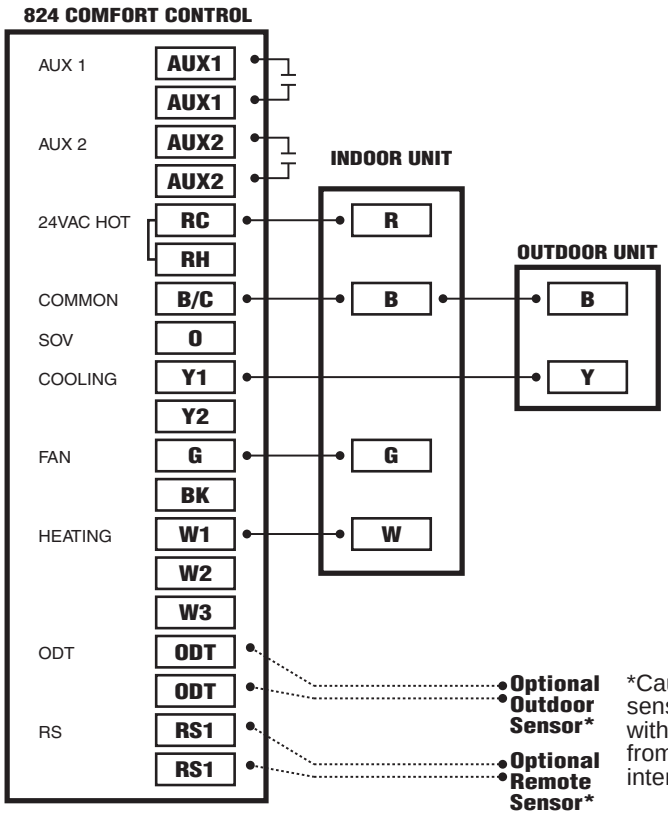

*Caution: Do not run Outdoor/Remote sensor wires in the same bundle with HVAC wires. Also, keep away from high voltage wiring to avoid interference.

Diagram 6 - 1 Stage Cooling w/GAF2-36M Model Air Handler

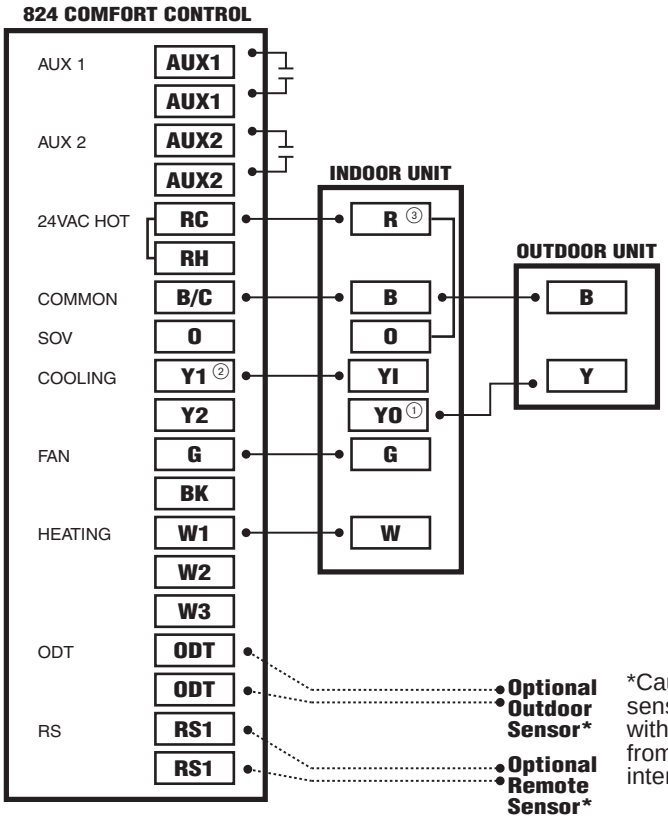

NOTES:

1. YI and YO connections must be made as shown for freeze protection and internally mounted condensate overflow circuits to function properly
2. If 3rd party overflow condensate switches are installed, wire between Y1 of the 824 and YI of the air handler
3. Jumper R and O must be installed for blower to run at cooling airflow

*Caution: Do not run Outdoor/Remote sensor wires in the same bundle with HVAC wires. Also, keep away from high voltage wiring to avoid interference.

Diagram 7 - 1 Stage Cooling w/GAT2 & GAM2 Model Air Handler

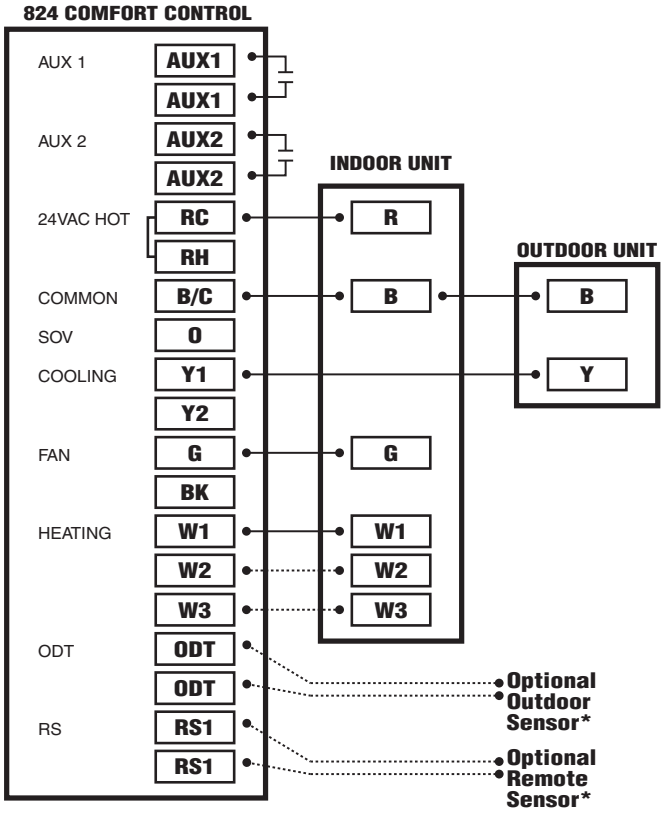

*Caution: Do not run Outdoor/Remote sensor wires in the same bundle with HVAC wires. Also, keep away from high voltage wiring to avoid interference.

Diagram 8 - 1 Stage Cooling w/TEM3 Model Air Handler

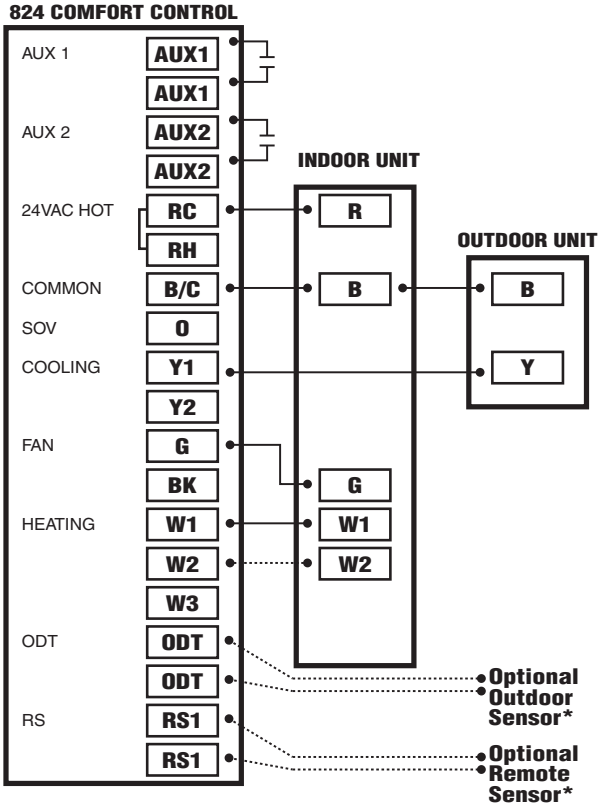

*Caution: Do not run Outdoor/Remote sensor wires in the same bundle with HVAC wires. Also, keep away from high voltage wiring to avoid interference.

Diagram 9 - 1 Stage Cooling w/TEM4 Air Handler

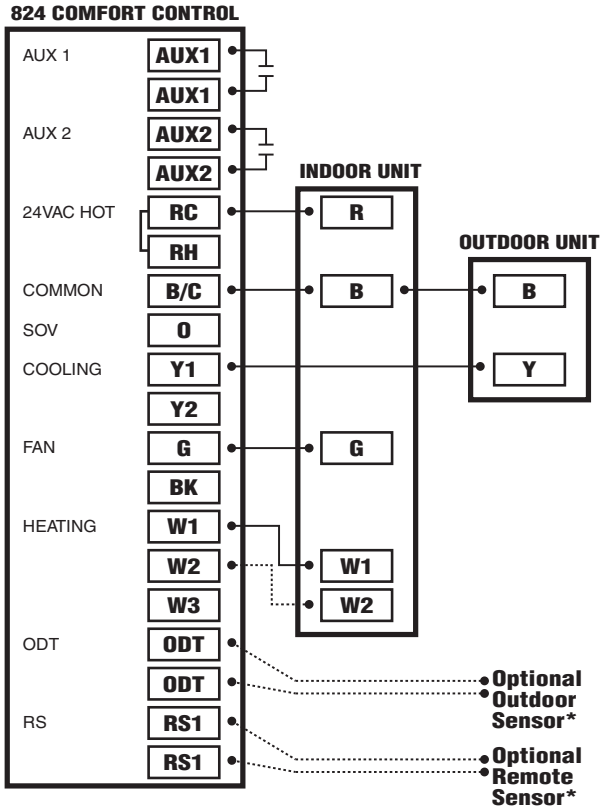

*Caution: Do not run Outdoor/Remote sensor wires in the same bundle with HVAC wires. Also, keep away from high voltage wiring to avoid interference.

Diagram 10 - 1 or 2 Stage Cooling w/TEM6 Air Handler

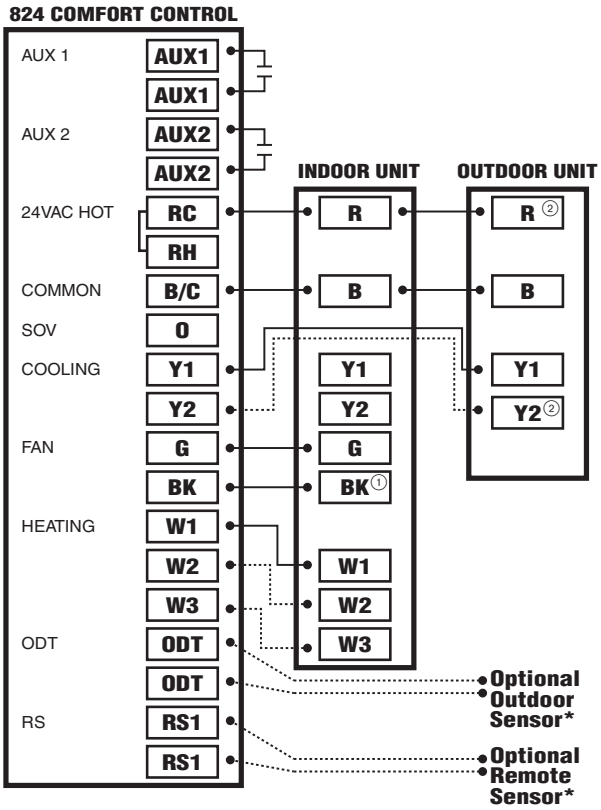

NOTES:

1. Cut and remove the BK jumper at the indoor unit
2. R & Y2 connections at outdoor are only required for two stage units

*Caution: Do not run Outdoor/Remote sensor wires in the same bundle with HVAC wires. Also, keep away from high voltage wiring to avoid interference.

Diagram 11 - 1 Stage w/Cooling Gas Furnace

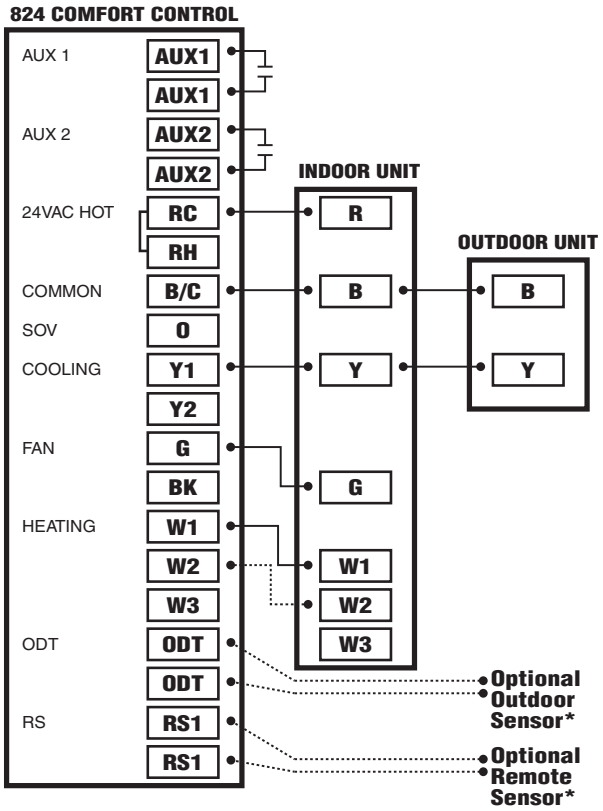

*Caution: Do not run Outdoor/Remote sensor wires in the same bundle with HVAC wires. Also, keep away from high voltage wiring to avoid interference.

Diagram 12 - 1 or 2 Stage Cooling w/Variable Speed Gas Furnace

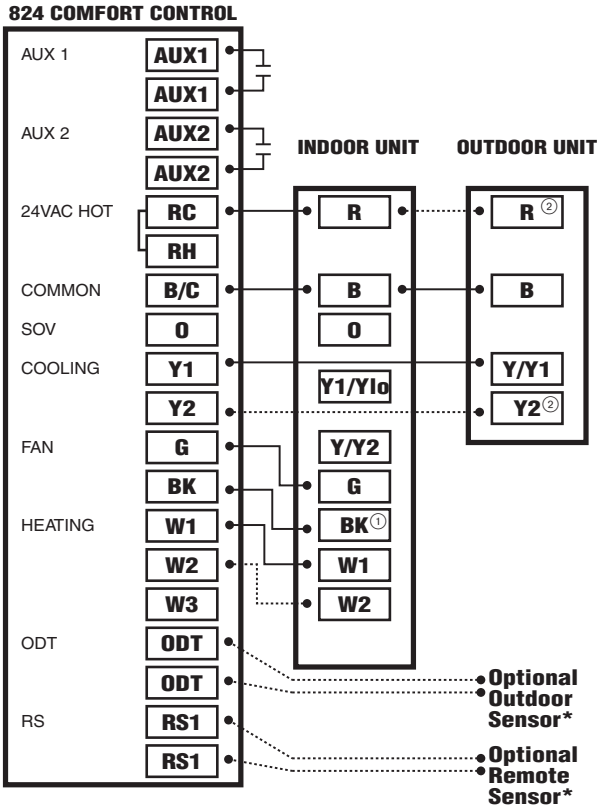

NOTES:

1. Cut and remove the factory installed BK jumper at the indoor unit IFC Board (some units may require DIP switch settings)
2. R & Y2 connections at outdoor are only required for two stage units

*Caution: Do not run Outdoor/Remote sensor wires in the same bundle with HVAC wires. Also, keep away from high voltage wiring to avoid interference.

Diagram 13 - 1 or 2 Stage Cooling with S9V2 Furnace

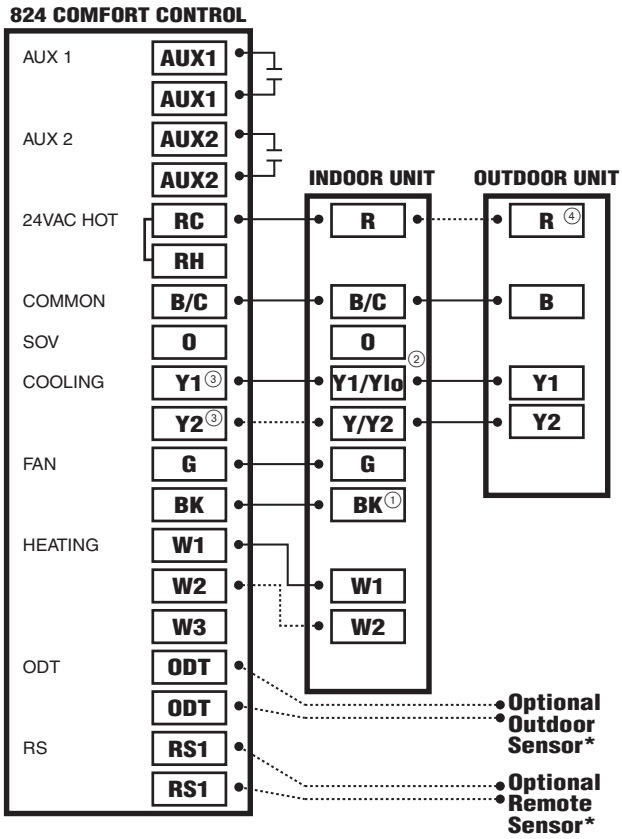

NOTES:

1. Cut and remove the BK jumper at the indoor unit
2. Remove the factory Y1-O jumper on the indoor unit for heat pump systems for proper LED readout
3. Y1 and Y2 wiring from the 824 must connect to Y1 and Y2 of the indoor unit IFC for proper air flow and LED read out
4. R connection at outdoor unit is required only for two compressor/two stage units

*Caution: Do not run Outdoor/Remote sensor wires in the same bundle with HVAC wires. Also, keep away from high voltage wiring to avoid interference.

Diagram 14 - Package 1 or 2 Stage Heat/Cool w/Variable Speed Blower

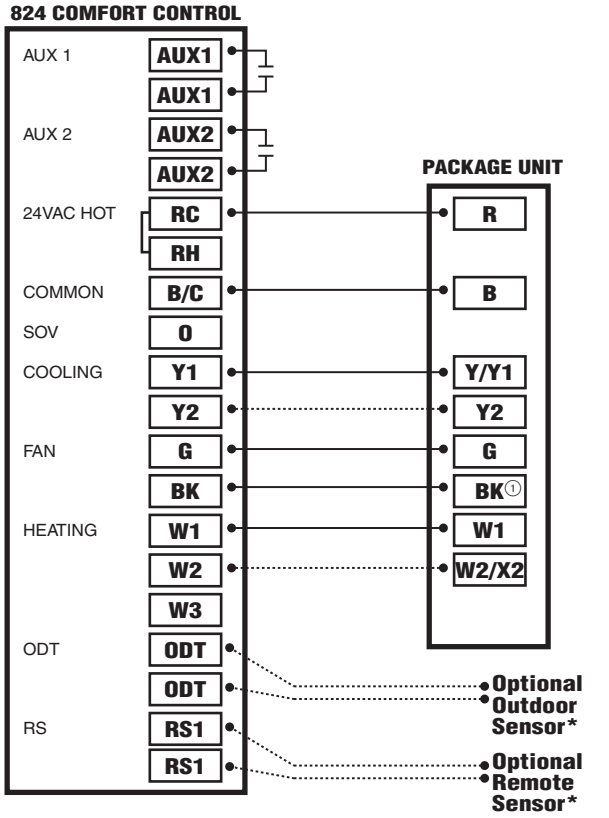

NOTES:

1. Remove "R" to "BK" jumper and clip all "Y" connections at the integrated motor control board (ICMC) to enable pulse width control of the variable speed indoor blower. Ensure clipped wires are capped and taped off.

*Caution: Do not run Outdoor/Remote sensor wires in the same bundle with HVAC wires. Also, keep away from high voltage wiring to avoid interference.

Diagram 15 - Package 1 Stage Heat/Cool w/Non-Variable Speed Blower

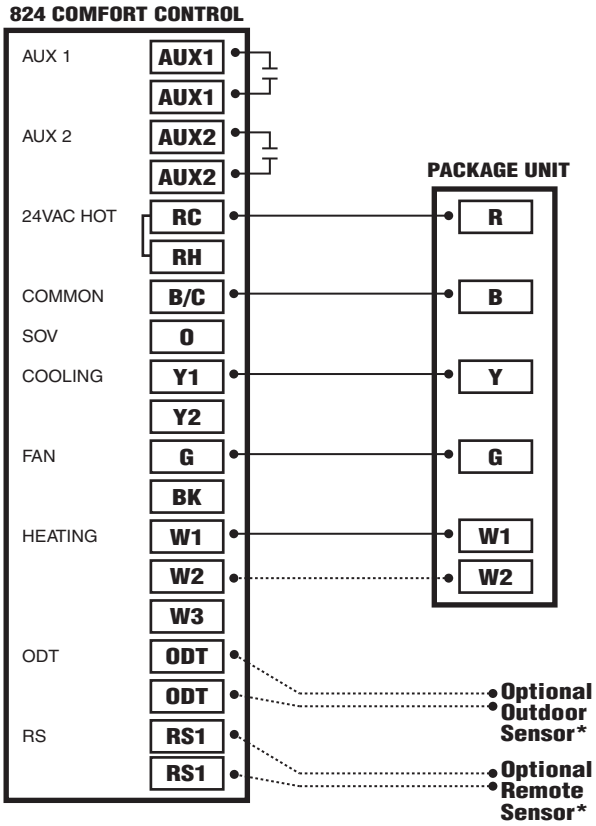

*Caution: Do not run Outdoor/Remote sensor wires in the same bundle with HVAC wires. Also, keep away from high voltage wiring to avoid interference.

Diagram 16 - Ameristar 1 Stage Cooling

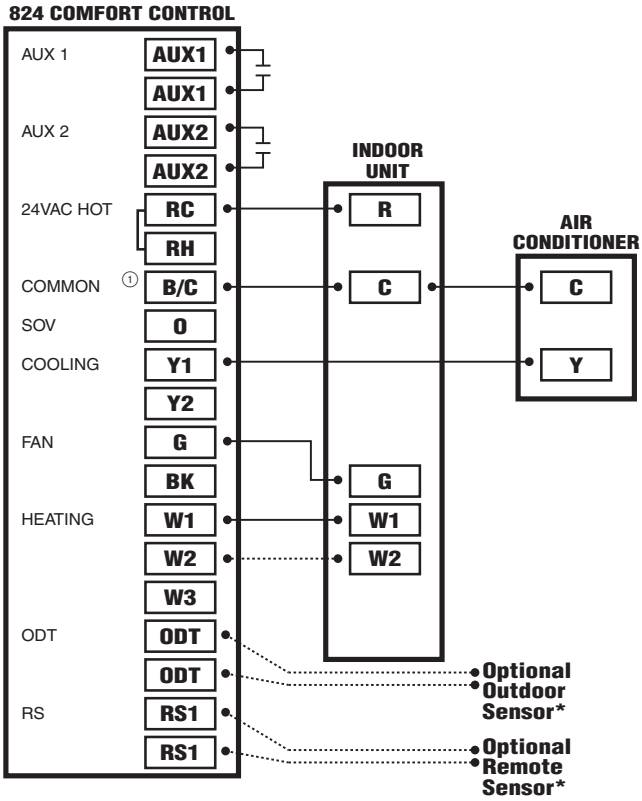

NOTES:
1. B/C at the Control is 24v common and must be connected to C at the Indoor and Outdoor Units

*Caution: Do not run Outdoor/Remote sensor wires in the same bundle with HVAC wires. Also, keep away from high voltage wiring to avoid interference.

4.6 Heat Pump Applications

Diagram 17 - 1 or 2 Stage Heat Pump w/TAM7 Model Air Handler

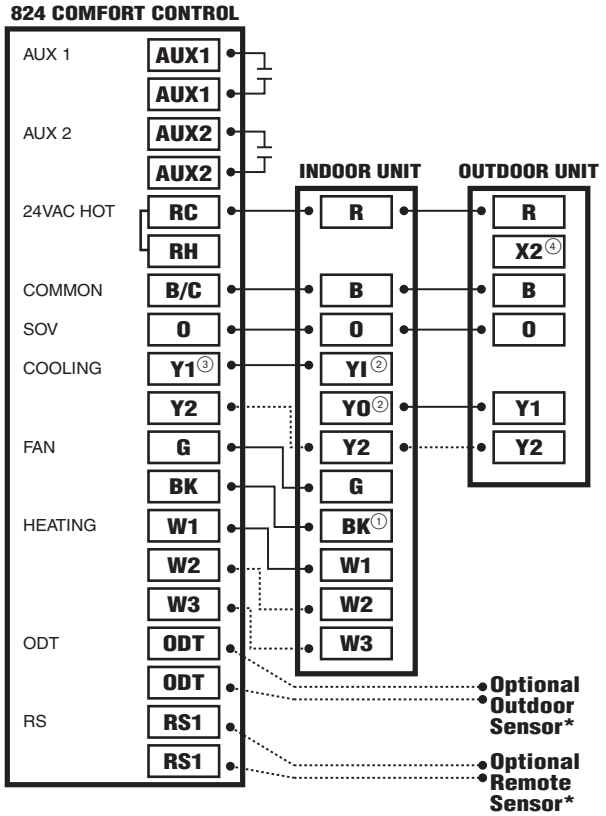

NOTES:

1. Remove the factory installed BK jumper at the indoor unit's AFC Board
2. YI and YO connections must be made as shown for freeze protection and internally mounted condensate overflow circuits to function properly
3. Wire 3rd party condensate overflow switches between Y1 of the 824 and YI of the airflow control board
4. Do not connect X2 when using this control.

*Caution: Do not run Outdoor/Remote sensor wires in the same bundle with HVAC wires. Also, keep away from high voltage wiring to avoid interference.

Diagram 18 - 1 Stage Heat Pump w/GAM5A or TAM4 Model Air Handler

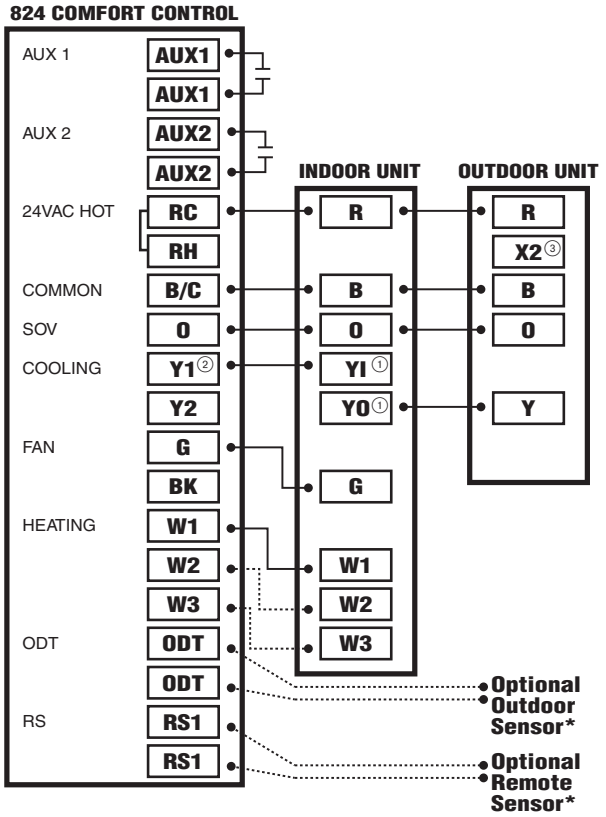

NOTES:

1. YI and YO connections must be made as shown for freeze protection and internally mounted condensate overflow circuits to function properly
2. Wire 3rd party condensate overflow switches beteeen Y1 of the 824 and Y of the air handler
3. Do not connect X2 when using this control.

*Caution: Do not run Outdoor/Remote sensor wires in the same bundle with HVAC wires. Also, keep away from high voltage wiring to avoid interference.

Diagram 19 - 1 Stage Heat Pump w/GAM5B Model Air Handler

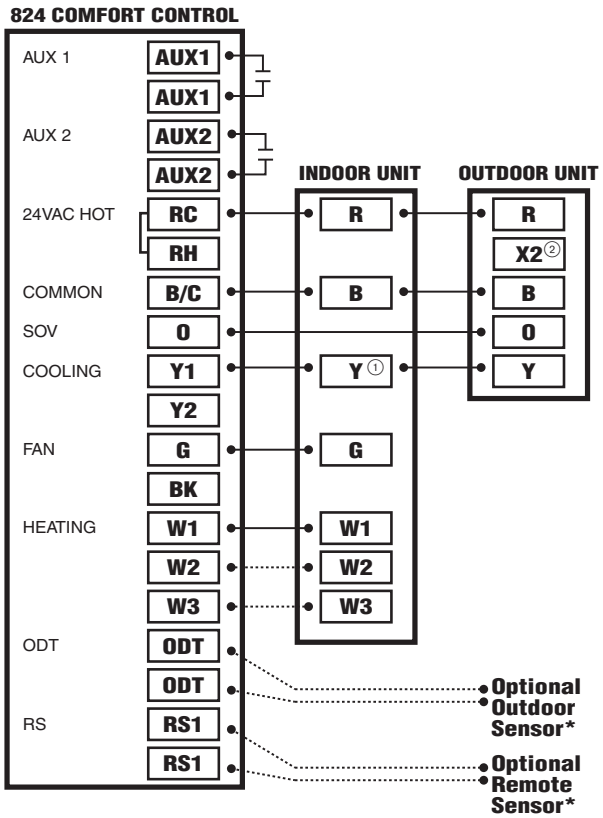

NOTES:

1. Y terminal must be connected at indoor unit for selected compressor air flow
2. Do not connect X2 when using this control.

*Caution: Do not run Outdoor/Remote sensor wires in the same bundle with HVAC wires. Also, keep away from high voltage wiring to avoid interference.

Diagram 20 - 2 Stage Heat Pump w/GAM5B Model Air Handler

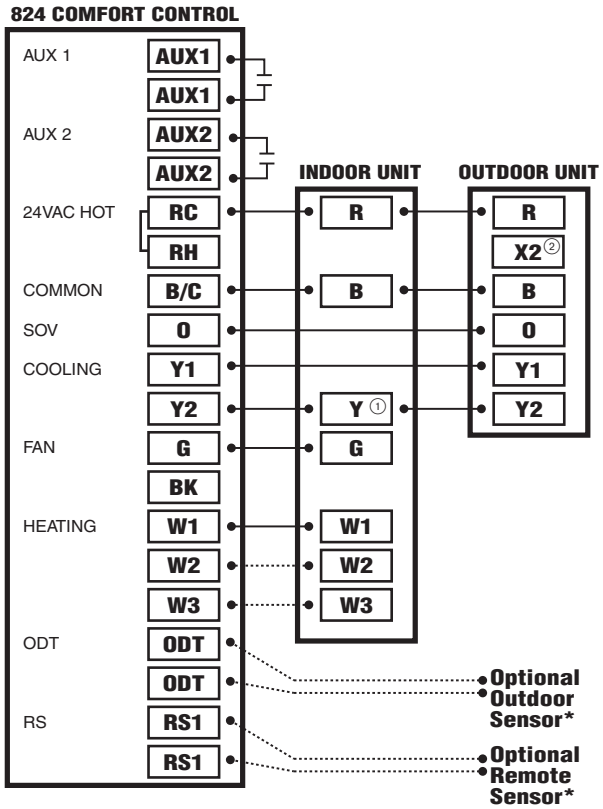

NOTES:

1. Y terminal must be connected at indoor unit for selected compressor air flow
2. Do not connect X2 when using this control.

*Caution: Do not run Outdoor/Remote sensor wires in the same bundle with HVAC wires. Also, keep away from high voltage wiring to avoid interference.

Diagram 21 - 1 Stage Heat Pump w/GAF2-S Model Air Handler

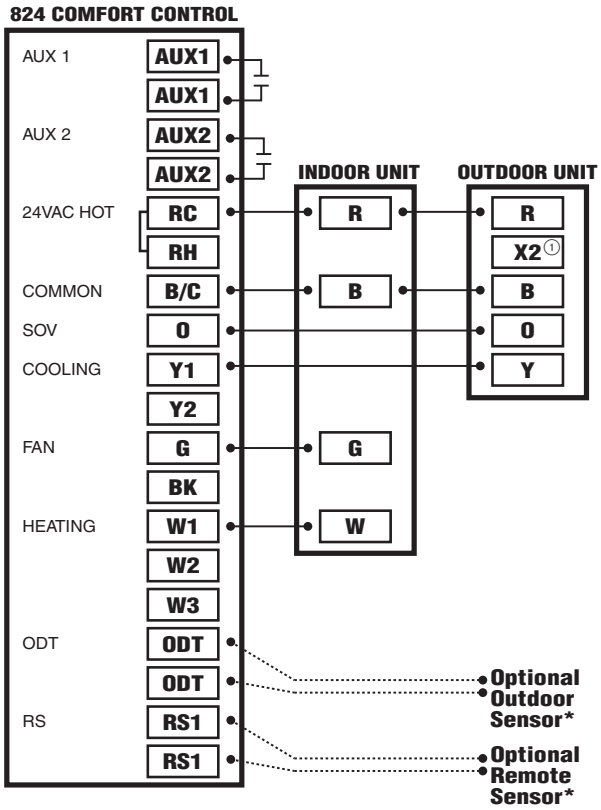

NOTES:

1. Do not connect X2 when using this control.

*Caution: Do not run Outdoor/Remote sensor wires in the same bundle with HVAC wires. Also, keep away from high voltage wiring to avoid interference.

Diagram 22 - 1 Stage Heat Pump w/GAF2-36M Model Air Handler

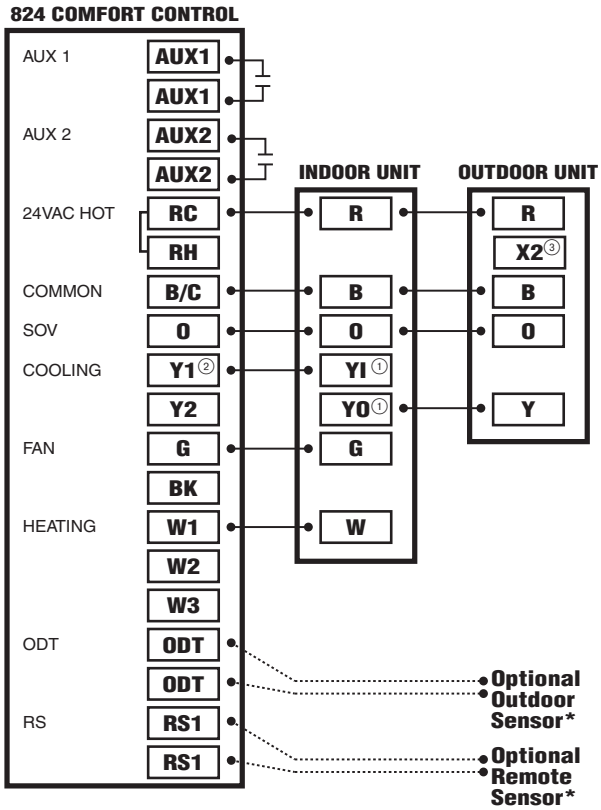

NOTES:

1. YI and YO connections must be made as shown for freeze protection and internally mounted condensate overflow circuits to function properly
2. Wire 3rd party condensate overflow switches beteeen Y1 of the 824 and YI of the air handler
3. Do not connect X2 when using this control.

*Caution: Do not run Outdoor/Remote sensor wires in the same bundle with HVAC wires. Also, keep away from high voltage wiring to avoid interference.

Diagram 23 - 1 Stage Heat Pump w/GAT2 & GAM2 Model Air Handler

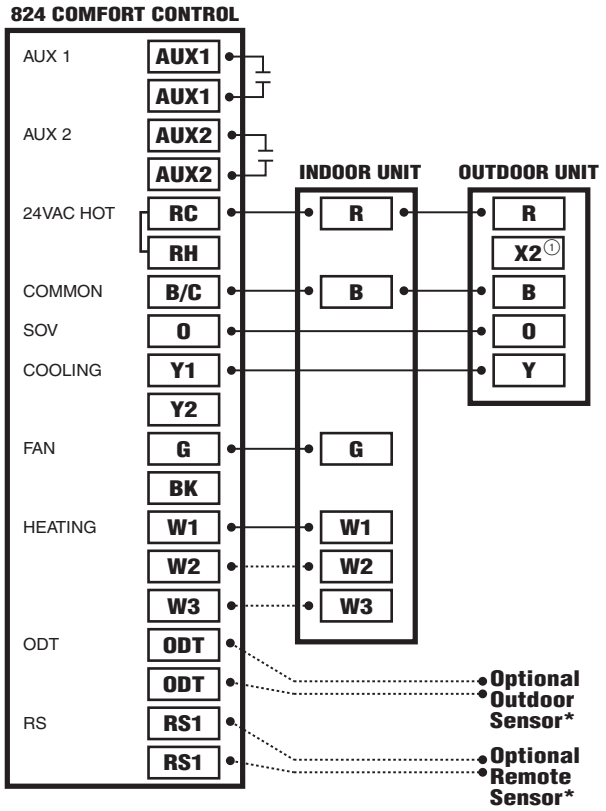

NOTES:

1. Do not connect X2 when using this control.

*Caution: Do not run Outdoor/Remote sensor wires in the same bundle with HVAC wires. Also, keep away from high voltage wiring to avoid interference.

Diagram 24 - 1 Stage Heat Pump w/TEM3 Model Air Handler

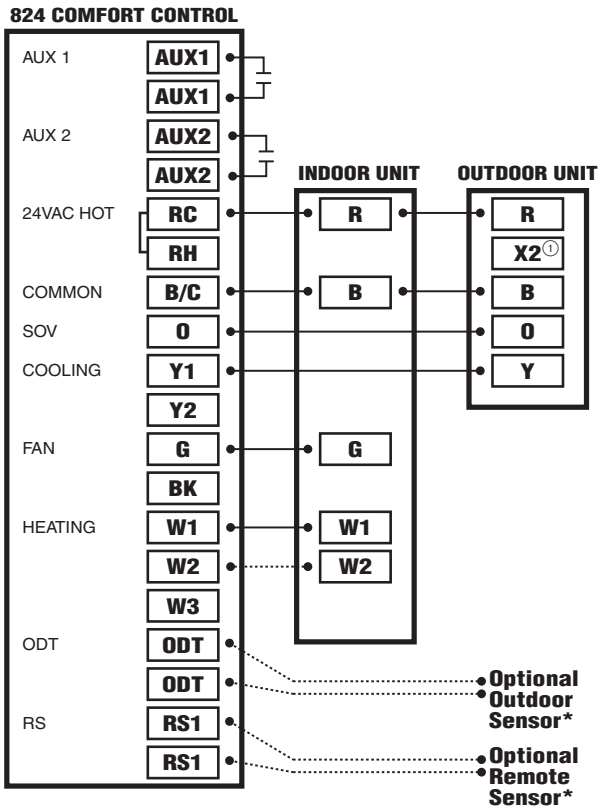

NOTES:

1. Do not connect X2 when using this control.

*Caution: Do not run Outdoor/Remote sensor wires in the same bundle with HVAC wires. Also, keep away from high voltage wiring to avoid interference.

Diagram 25 - 1 Stage Heat Pump w/TEM4 Air Handler

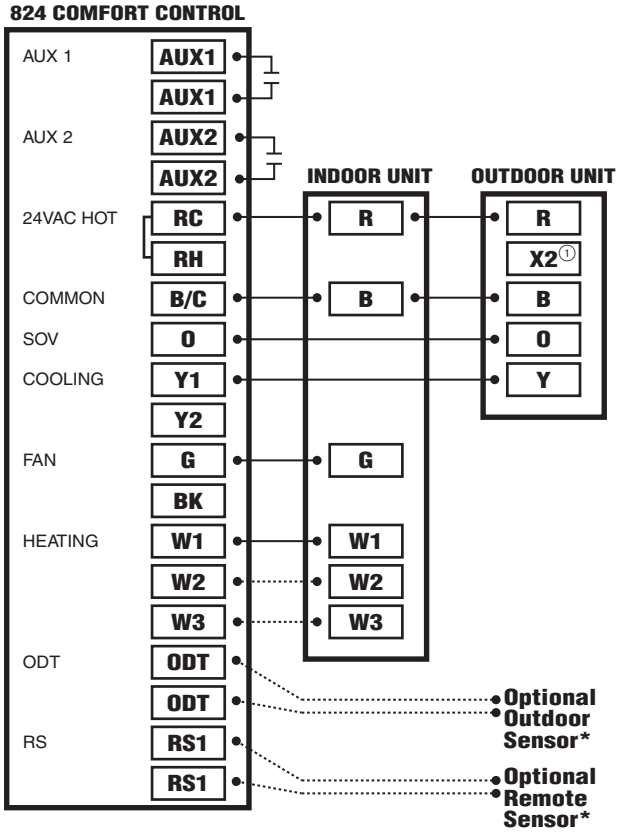

NOTES:

1. Do not connect X2 when using this control.

*Caution: Do not run Outdoor/Remote sensor wires in the same bundle with HVAC wires. Also, keep away from high voltage wiring to avoid interference.

Diagram 26 - 1 or 2 Stage Heat Pump w/TEM6 Variable Speed Air Handler

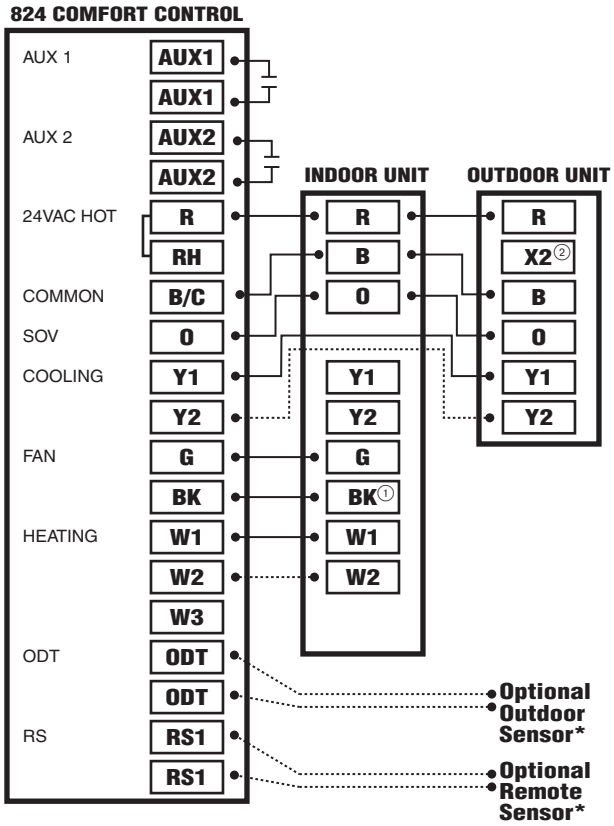

NOTES:

1. Remove the factory installed BK jumper at the indoor unit
2. Do not connect X2 whene using this control.
3. Y2 connection at outdoor is only required for two stage units

*Caution: Do not run Outdoor/Remote sensor wires in the same bundle with HVAC wires. Also, keep away from high voltage wiring to avoid interference.

Diagram 27 - Package 1 or 2 Stage Heat Pump w/Variable Speed Blower

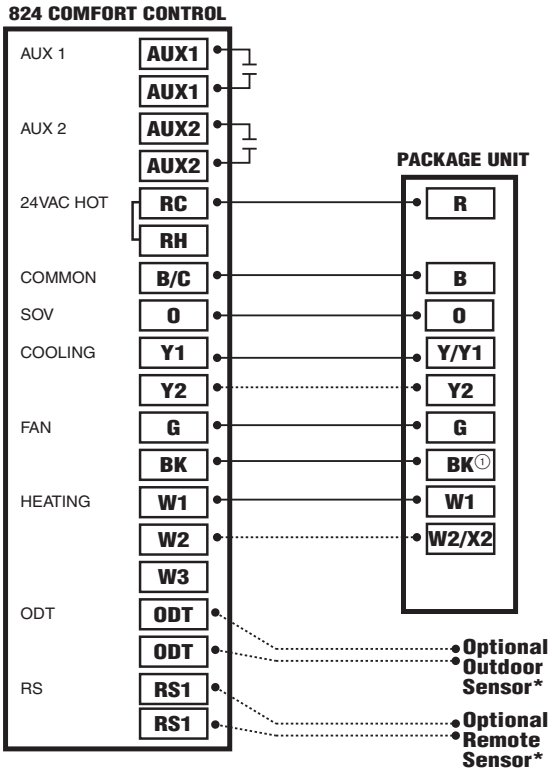

NOTES:

1. Remove "R" to "BK" jumper and clip all "Y" connections at the integrated motor control board (ICMC) to enable pulse width control of the variable speed indoor blower. Ensure clipped wires are capped and taped off.

*Caution: Do not run Outdoor/Remote sensor wires in the same bundle with HVAC wires. Also, keep away from high voltage wiring to avoid interference.

Diagram 28 - Package 1 Stage Heat Pump w/Non-Variable Speed Blower

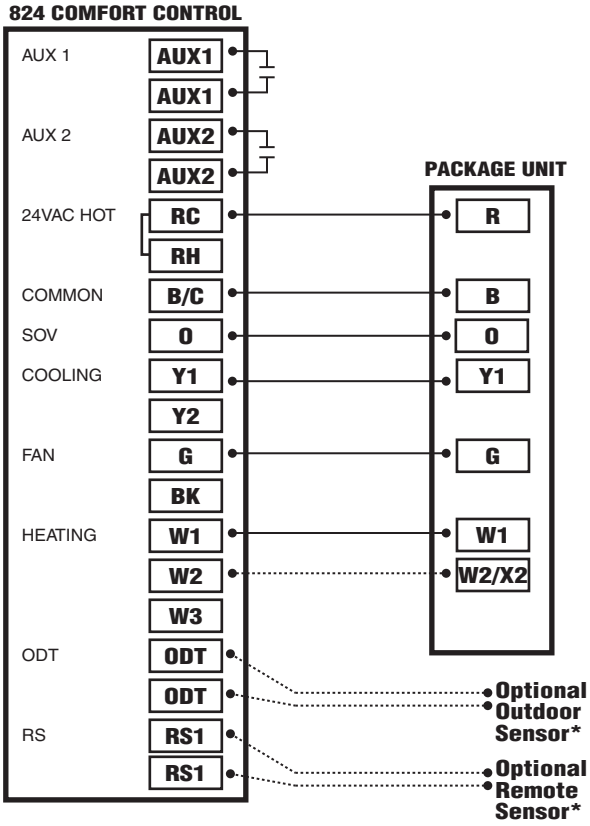

*Caution: Do not run Outdoor/Remote sensor wires in the same bundle with HVAC wires. Also, keep away from high voltage wiring to avoid interference.

Diagram 29 - Ameristar 1 Stage Heat Pump

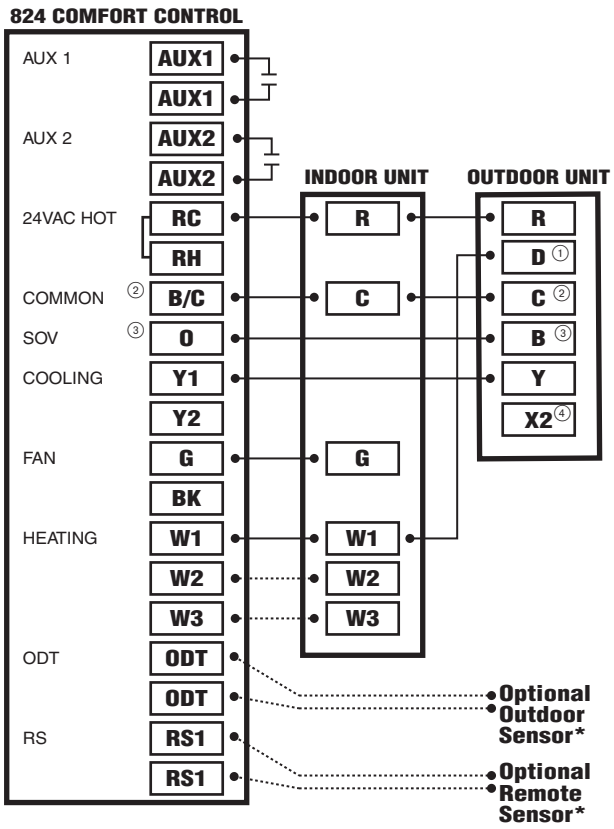

NOTES:

1. D at the Outdoor Unit must be wired to W1 or W2 for electric heat during defrost
2. B/C at the Control is 24v common and must be connected to C at the Indoor and Outdoor Units
3. O at the Control must be connected to B at the Outdoor Unit for SOV operation - SOV must also be configured to be energized in heating mode in the 824 Installer Settings>Standard
4. Do not connect X2 when using this control.

*Caution: Do not run Outdoor/Remote sensor wires in the same bundle with HVAC wires. Also, keep away from high voltage wiring to avoid interference.

4.7 Dual Fuel Applications

Diagram 30 - 1 or 2 Stage Heat Pump w/Variable Speed Gas Furnace

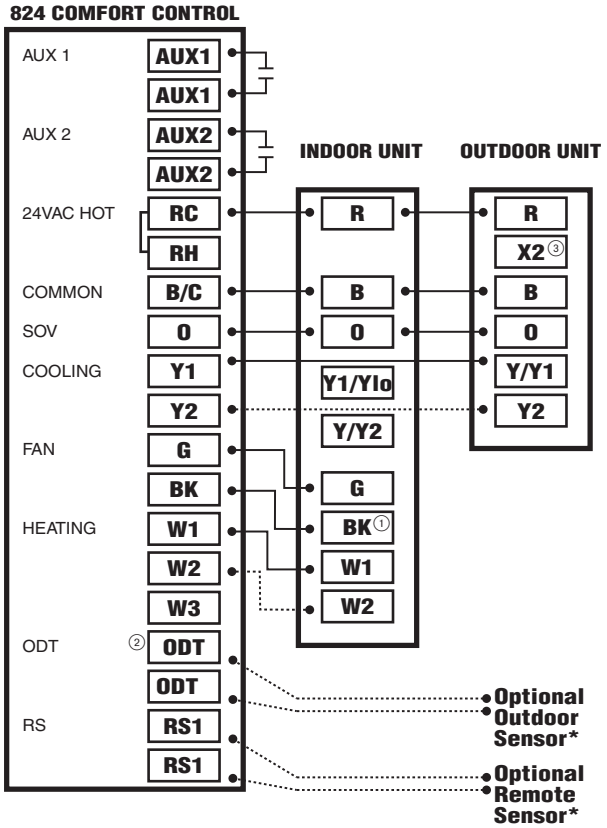

NOTES:

1. Cut and remove the factory installed BK jumper at the indoor unit (some units may require DIP switch settings)
2. For restricted mode operation, a wired ODT sensor must be connected to the 824
3. Connection to X2 is not required for this configuration

*Caution: Do not run Outdoor/Remote sensor wires in the same bundle with HVAC wires. Also, keep away from high voltage wiring to avoid interference.

Diagram 31 - 1 Stage Heat Pump w/Non-Variable Speed Gas Furnace

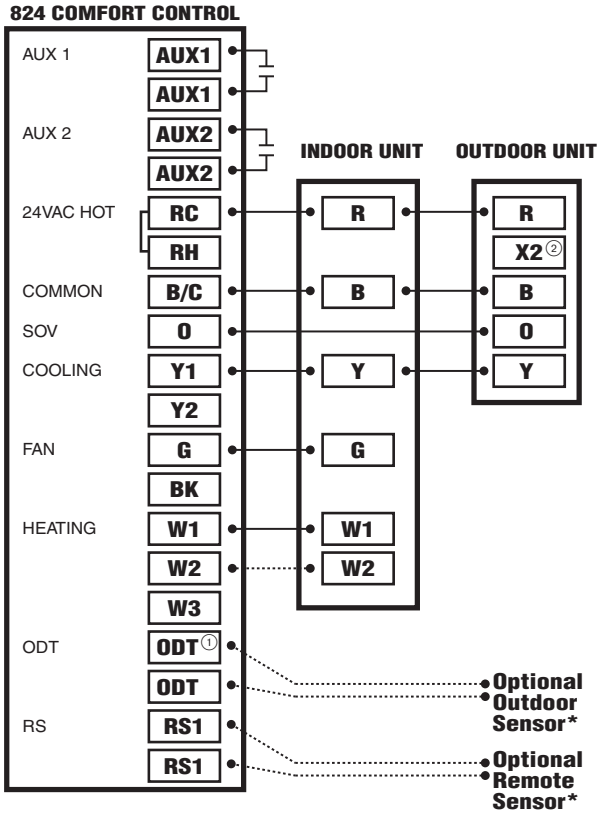

NOTES:

1. For restricted mode operation, a wired ODT sensor must be connected to the 82
2. Connection to X2 is not required for this configuration

*Caution: Do not run Outdoor/Remote sensor wires in the same bundle with HVAC wires. Also, keep away from high voltage wiring to avoid interference.

Diagram 32 - 1 or 2 Stage Heat Pump w/S9V2 Furnace

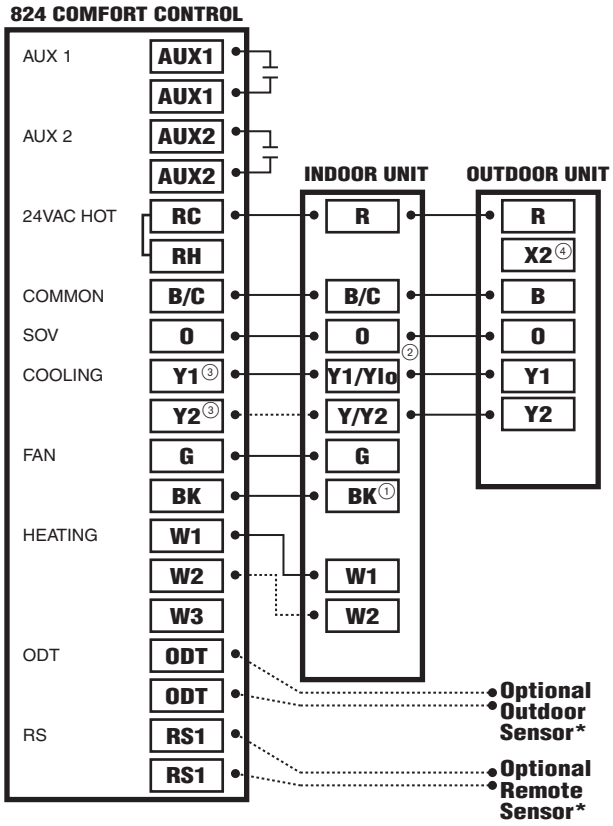

NOTES:

1. Cut and remove the BK jumper at the indoor unit
2. Remove the factory Y1-O jumper on the indoor unit for heat pump systems for proper LED readout
3. Y1 and Y2 wiring from the 824 must connect to Y1 and Y2 of the indoor unit IFC for proper air flow and LED read out
4. Connection to X2 is not required for this configuration

*Caution: Do not run Outdoor/Remote sensor wires in the same bundle with HVAC wires. Also, keep away from high voltage wiring to avoid interference.

Diagram 33 - Package 1 or 2 Stage Dual Fuel w/Variable Speed Blower

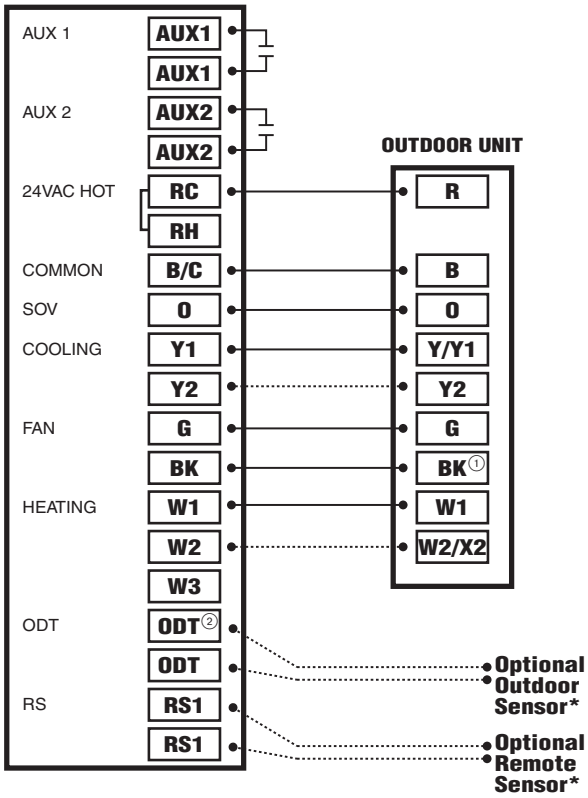

NOTES:

1. Remove “R” to “BK” jumper and clip all “Y” connections at the integrated motor control board (ICMC) to enable pulse width control of the variable speed indoor blower. Ensure clipped wires are capped and taped off.
2. For restricted mode operation, a wired ODT sensor must be connected to the 824.

*Caution: Do not run Outdoor/Remote sensor wires in the same bundle with HVAC wires. Also, keep away from high voltage wiring to avoid interference.

5. System Setup

5.1 Power-Up Sequence

When the 824 Control is connected to the Sub-base, the Control initiates a 90-120 second power-up sequence. During the power-up sequence, the Screen Calibration option is available for five seconds (Screen Calibration is available for five minutes if the screen has never been calibrated and following a Restore Factory Defaults command).

If the screen is not pressed within five minutes, the Control will default to previously stored Screen Calibration settings. The 824 Control is factory calibrated and can be recalibrated at any time by rebooting the Control.

Note: Temperature display may be inaccurate until the 824 Control acclimates to ambient room conditions, which may take up to one hour.

5.2 Guided Setup Wizards

The 824 Control features two Setup Wizards, the Installation Wizard and the User Setup Wizard. The Installation Wizard guides installers through the installation and configuration process, and the User Setup Wizard guides Homeowners through user-configurable settings.

Installation Wizard

The Installation Wizard appears when 1) the 824 Control is powered on for the first time, 2) when the Restore Factory Defaults function is invoked (Home>Menu>Service> Technician Access>Proceed>Restore Factory Defaults), and 3) when it is selected directly (Home>Menu>Service> Technician Access>Proceed>Installation Wizard).

By following the navigational steps and screen prompts, installers are guided through the Time and Date screens, Installer Setup screens (see “5.4 Installer Setup Screens” on page 25 for detailed descriptions of each of the Installer Setup Screens), Reminders screens and the Dealer Code configuration screens. Each of these menus can be individually accessed after completing the Installation Wizard.

User Setup Wizard

The User Setup Wizard is accessed navigating to Home>Menu>Settings>User Setup Wizard. By following the navigational steps and screen prompts, homeowners are guided through the Display, Schedules, Guided Schedule, Network, Nexia and Weather configuration screens. Each of these menus may also be accessed individually. Refer to the User Guide for detailed information on user settings.

5.3 Smart Optimization

The 824 Control is equipped with Smart Optimization. By executing a series of blower and active call on/off tests, Smart Optimization will customize the 824 Control to each unique environment and increase the accuracy of the sensed indoor temperature and overall system performance.

Smart Optimization is enabled by default and will automatically execute approximately 18 hours after initial power up. Smart Optimization takes 90 minutes to complete and during the process, heating and cooling operations are disabled. The screen will indicate that the 824 Control is in Smart Optimization mode.

To delay Smart Optimization for an additional 18 hours, touch the 824 Control Screen and hold for five seconds.

To disable Smart Optimization altogether, navigate to Home>Smart Optimization and select Disable and press Apply.

To enable Smart Optimization, navigate to Home>Smart Optimization and select Enable and press Apply. Smart Optimization will execute in approximately 18 hours.

To manually trigger Smart Optimization, first disable, then re-enable the feature.

INSTALLATION WIZARD MENU ITEMS	DESCRIPTION
Date and Time	Set the current date, time and select whether Daylight Savings Time is on or off.
Installer Setup	Configure the basic equipment components installed and customize how the control operates. See Sections 5.4.1 through 5.4.7 for detailed information on installer setup options.
Service Reminders	Various service reminders can be enabled on the 824 control based on the system configured. Reminder options are System, Filter, Ventilation, UV Light and Humidifier. The frequency of each reminder can be selected based on calendar or run time days.
Dealer Identification Code	The dealer identification code is used to populate the Dealer Contact Information and associate this device with a Nexia Dealer Portal account. Enter the primary phone number of the dealership to activate this feature. Only controls connected to the Internet will auto-populate the dealer information.

5.4 Installer Setup Screens

From the Installer Setup screens, individual parameters are configured and modified. Use the up and down arrows to scroll through the groups of settings. To change a setting contained in a particular group, press Edit and press Next to navigate to the desired setting. Press Save to save changes or Exit to discard changes.

5.4.1 Group 1 Standard Settings

MENU ITEM	OPTIONS [DEFAULT]	DESCRIPTION
Outdoor Unit Type	None, [Cooling Only], Heat Pump	Select the type of outdoor unit installed
Outdoor Unit Stages	[Single Stage], Two Stage	Select the number of outdoor unit stages
Compressor Type	Single Compressor Two Stage, [Two Compressor Two Stage]	Select the compressor type for multi-stage outdoor units
Indoor Unit Type	[Gas/Oil], Electric, Hydronic	Select the type of indoor unit installed
Indoor Heat Stages	[Single Stage], Two Stage, Three Stage	Select the number of indoor heat stages
Indoor Blower Type	Variable, [Non - Variable]	Select the indoor blower type (Constant Torque motors are considered non-variable speed)
SOV Operation	[with Cooling Call], with Heating Call	Select which mode of operation energizes the switch-over valve

5.4.2 Group 2 Equipment Settings

MENU ITEM	OPTIONS [DEFAULT]	DESCRIPTION
Compressor Cooling Cycles Per Hour	2 to 6 Cph [3]	Select the number of cycles per hour during cooling operation
1st Stage Compressor Cooling Cycles Per Hour	2 to 6 Cph [3]	Select the number of cycles per hour during 1st stage cooling operation
2nd Stage Compressor Cooling Cycles Per Hour	2 to 6 Cph [3]	Select the number of cycles per hour during 2nd stage cooling operation
Compressor Heating Cycles Per Hour	2 to 6 Cph [3]	Select the minimum runtime (MRT) of stage 1 indoor heat
1st Stage Compressor Heating Cycles Per Hour	2 to 6 Cph [3]	Select the minimum runtime (MRT) of stage 2 indoor heat
2nd Stage Compressor heating Cycles Per Hour	2 to 6 Cph [5]	Select the minimum off time (MOT) for indoor heat operation
Indoor Heater Cycles Per Hour	2 to 6 Cph [5]	Select the number of cycles per hour during indoor heat operation
1st Stage Indoor Heat Cycles Per Hour	2 to 6 Cph [5]	Select the number of cycles per hour during 1st stage indoor heat operation
2nd Stage Indoor Heat Cycles Per Hour	2 to 6 Cph [5]	Select the number of cycles per hour during 2nd stage indoor heat operation
3rd Stage Indoor Heat Cycles Per Hour	2 to 6 Cph [5]	Select the number of cycles per hour during 3rd stage indoor heat operation

5.4.3 Group 3 Sensor Settings

MENU ITEM	OPTIONS [DEFAULT]	DESCRIPTION
Select Outdoor Temperature Sensor	[No ODT Sensor], Remote ODT Sensor	Select whether an outdoor temperature sensor has been connected
Calibrate Outdoor Temperature Sensor	-5°F to 5°F	Calibrate the outdoor temperature sensor
Select Indoor Temperature Sensor	[Onboard IDT Sensor] Remote IDT Sensor	Select whether the indoor temperature is being sensed by the 824 Control onboard sensor or wired remote sensor
Calibrate Indoor Temperature Sensor	-5°F to 5°F	Calibrate the indoor temperature sensor
Calibrate Onboard Humidity Sensor	-5% - 5%	Calibrate the onboard humidity sensor

5.4.4 Group 4 Accessories Settings

MENU ITEM	OPTIONS [DEFAULT]	DESCRIPTION
Filtration Type Installed	Air Cleaner, [Media Filter]	Select the filter type installed
Humidifier Installed	[None], Yes	Select whether a humidifier is installed
Humidifier - Select Aux Contact	[Aux1], Aux2	Select which set of Aux contacts is controlling the humidifier
Humidifier Type	[Powered/Bypass], Steam	Select what type of humidifier is installed
Humidifier Control	[RH Control], Frost Control	Select how the humidifier will be controlled (Outdoor temperature sensor must be connected and enabled to allow Frost Control to be selectable)
Humidifier Fan Action	[Humidify with active Heat Call], Humidify without active Heat Call	Select when the humidifier is allowed to operate
Airflow During Humidifier Only Mode	35% to [100%]	Select the desired airflow when the humidifier is operating without an active call for heat - requires variable speed blower
UV Light Installed	[None], Yes	Select whether a UV Light is installed
Ventilation Installed	[None], Yes	Select whether ventilation is installed
Ventilation - Select Aux Contact	Aux1, [Aux2]	Select which set of Aux contacts is controlling the ventilation system
Minimum Ventilation Runtime	0 - 60 Minutes [5 Minutes]	Select the minimum runtime per hour for ventilation system
Outdoor Temperature Ventilation Override	[Disable], Enable	Select whether an outdoor temperature override is allowed (Outdoor temperature sensor must be connected and enabled to allow this setting to be selected)
Ventilator Fan Action	[Ventilate with Blower]. Ventilate without Blower	Select whether the indoor blower operates on a call for ventilation
Ventilation - Minimum Outdoor Temperature	*-10°F to 50°F [0°]	Select the minimum outdoor temperature that ventilation is allowed
Ventilation - Maximum Outdoor Temperature	80°F to 110°F [100°F]	Select the maximum outdoor temperature that ventilation is allowed
Accumulate Overridden Runtime	[No], Yes	Select whether the overridden ventilation runtime will be made up
Accumulated Period	[4 hours -recover based on outdoor conditions], 24 hours - recover based on outdoor conditions, 4 hours - recover to maintain minimum ventilation, 24 hours - recover to maintain minimum ventilation	Select when to recover missed ventilation runtime due to outdoor conditions exceeding the minimum/maximum outdoor temperature setting (The first two options will not meet ASHRAE 62.2 Standard for minimum ventilation requirements)
Dehumidifier Installed	[None], Yes	Select whether a dehumidifier is installed
Dehumidifier - Select Aux Contact	Aux1, [Aux2]	Select which set of aux contacts is controlling the ventilation system
Dehumidifier Control Options	[Stand Alone Operation], With Active Call for Cooling Only	Select when the dehumidifier is allowed to operate
Run System Fan with Dehumidifier Request	Yes, [No]	Select if the indoor fan should operate with a call for dehumidifier operation

5.4.5 Group 5 Comfort Settings

MENU ITEM	OPTIONS [DEFAULT]	DESCRIPTION
Enable Dehumidification	[Enable], Disable	Select if enhanced dehumidification features are enabled. See section 7.2 Advanced Operation - Dehumidification for additional information.
Dehumidification Overcooling Limit - Degrees	[0°] to 3°F	Select the maximum amount of overcooling allowed when the indoor humidity exceeds the cooling target humidity setpoint. See section 7.2 Advanced Operation - Dehumidification for additional information.
Smart Continous Fan	Enable, [Disable]	Select to enable or disable Smart Continous Fan
Control Response Rate	[Normal], Fast	Select the response rate of the control. See section 7.1 Advanced Operation - Control Response Rate for additional information.
Aggressive Recovery > 2° Setpoint Change	Enable, [Disable]	Select whether the 10-minute staging inhibit is disabled (heating or cooling mode) with a setpoint change greater than 2°. See section 7.7.1 Advanced Operation - Aggressive Recovery for additional information.
Heating Aggressive Recovery by Outdoor Temperature	Enable, [Disable]	Select whether the 10-minute staging inhibit is disabled during heating mode when the outdoor temperature falls below the selected outdoor temperature (Outdoor temperature sensor must be connected and enabled to allow this setting to be selected)
Heating Aggressive Recovery Setting	0° to 70°F [40°F]	Select the outdoor temperature for Heating Aggressive Recovery
Warm Air Discharge	Enable, [Disable]	When enabled the indoor airflow will be limited to 80% on a call for heat pump heating. This only applies to heat pump heating with no call for aux heat (An indoor unit with a variable speed blower is required)

5.4.6 Group 6 Airflow Settings

MENU ITEM	OPTIONS [DEFAULT]	DESCRIPTION
VS Blower On Delay - Clg	[No Delay], Enhanced Mode, 7.5 Minutes @ 80%, 4 Minutes @ 80%, 1 Minute @ 50%, 30 Seconds	Select the blower on delay for cooling operation Enhanced Mode is a tiered Blower On Delay for variable speed blowers only (1 minute at 50%, 7.5 minutes at 80%, then 100%)
Non VS Blower On Delay - Clg	[No Delay], 15 Seconds 30 Seconds	Select the blower on delay for cooling operation
VS Blower Off Delay - Clg	[No Delay], 1.5 Minutes @ 100%, 45 Seconds @ 100%, 30 Seconds @ 50%, 1.5 Minutes @ 50%, 3 Minutes @ 50%, 30 Seconds @ 35%	Select the blower off delay for cooling operation
Non VS Blower Off Delay - Clg	[No Delay], 30 Seconds, 60 Seconds, 90 Seconds	Select the blower off delay for cooling operation
VS Blower On Delay - Comp Htg	[No Delay], Enhanced Mode, 7.5 Minutes @ 80%, 4 Minutes @ 80%, 1 Minute @ 50%, 30 Seconds	Select the blower on delay for compressor heating operation Enhanced Mode is a tiered Blower On Delay for variable speed blowers only (1 minute at 50%, 7.5 minutes at 80%, then 100%)
Non VS Blower On Delay - Comp Htg	[No Delay], 15 Seconds, 30 Seconds	Select the blower on delay for compressor heating operation
VS Blower Off Delay - Comp Htg	[No Delay], 1.5 Minutes @ 100%, 45 Seconds @ 100%, 30 Seconds % 50%, 1.5 Minutes @ 50%, 3 Minutes @ 50%, 30 Seconds @ 35%	Select the blower off delay for compressor heating operation
Non VS Blower Off Delay - Comp Htg	[No Delay], 30 Seconds, 60 Seconds, 90 Seconds	Select the blower off delay for compressor heating operation
Hydronic Heat Blower On Delay	[No Delay], 30 Seconds, 60 Seconds	Select the blower on delay for hydronic heating operation
Hydronic Heat Blower Off Delay	[No Delay], 30 Seconds, 60 Seconds, 90 Seconds	Select the blower off delay for hydronic heating operation
Compressor Low Stage Air Flow% - Comp Clg	35% to 60% [50%]	Select the 1st stage air flow for a two stage/two compressor unit in cooling mode
Compressor Low Stage Air Flow% - Comp Clg	55% to [80%]	Select the 1st stage air flow for a two stage/ single compressor unit in cooling mode
Compressor Low Stage Air Flow% - Comp Htg	35% to 60% [50%]	Select the 1st stage air flow for a two stage/two compressor unit in heating mode
Compressor Low Stage Air Flow% - Comp Htg	55% to [80%]	Select the 1st stage air flow for a two stage/ single compressor unit in heating mode

5.4.7 Group 7 Lockout Settings

An Outdoor Temperature Sensor must be enabled for Lockout settings to be selectable.

MENU ITEM	OPTIONS [DEFAULT]	DESCRIPTION
Auxiliary Heat Lockout	[Disable], Enable	Enable auxiliary heat lockout (10° minimum separation when enabling auxiliary heat lockout and compressor heat lockout)
Auxiliary Heat Lockout Setting	32°F to 70°F Degrees [45°]	Select an outdoor temperature to prevent auxiliary heat above the selected outdoor temperature
Compressor Lockout	[Disable], Enable	Enable compressor heat lockout (10° minimum separation when enabling auxiliary heat lockout and compressor heat lockout)
Compressor Lockout Setting	5°F to 70°F Degrees [30]	Select an outdoor temperature to prevent compressor heating below the selected outdoor temperature
Defrost Heater Balance Point (W1)	[Disable], Enable	Enable defrost heater balance point for W1, W2 and W3 (only applicable when indoor heat is electric or hydronic)
Defrost Heater Balance Point (W1) Setting	40°F to [55°F]	Select an outdoor temperature to disallow 1st, 2nd and 3rd stage of indoor heat during defrost above this temperature
Defrost Heater Balance Point (W2)	[Disable], Enable	Enable defrost heater balance point for W1 and W2 (only applicable when indoor heat is electric or hydronic)
Defrost Heater Balance Point (W2) Setting	10°F to 50°F [40°F]	Select an outdoor temperature to disallow 2nd and 3rd stage of indoor heat during defrost above this temperature
Defrost Heater Balance Point (W3)	[Disable], Enable	Enable defrost heater balance point for W3 only (only applicable when indoor heat is electric or hydronic)
Defrost Heater Balance Point (W3) Setting	[5°F] to 45°F [25°F]	Select an outdoor temperature to disallow 3rd stage of indoor heat during defrost above this temperature
Compressor Cooling 1st Stage Lockout	[Disable], Enable	Enable compressor cooling 1st stage lockout
Compressor Cooling 1st Stage Lockout Setting	80°F to [120°F]	Select an outdoor temperature to force the system to 2nd stage compressor cooling
Compressor Heating 1st Stage Lockout	[Disable], Enable	Enable compressor heating 1st stage lockout
Compressor Heating 1st Stage Lockout Setting	0°F to [50°F]	Select an outdoor temperature to force the system to 2nd stage compressor heating
Furnace Heating 1st Stage Lockout	[Disable], Enable	Enable furnace heating 1st stage lockout
Furnace Heating 1st Stage Lockout Setting	0°F to [50°F]	Select an outdoor temperature to force the system to 2nd stage furnace heating

5.5 Service Reminders

Reminders can be enabled to trigger an alert when service is required. The reminder is time-based and can be configured on system run time or calendar days. Reminders can be configured for humidifiers, filters, ventilation systems, UV lights and HVAC system maintenance. The type of reminders available are based on the accessories enabled in the installer settings.

5.6 Dealer Code

When an 824 Control is connected to the Internet, a Dealer Code can be entered to auto-populate the dealer's contact information and logo. The code is the dealer's registered phone number listed on ComfortSite. The Dealer Code is also used to associate this device with a specific dealer on the Dealer Diagnostic Portal.

5.7 Software Updates

To take full advantage of the features and benefits of the 824, the Control should have the latest software revision installed.

When the 824 is connected to a Nexia™ Home Intelligence account, software updates will occur automatically and do not require user intervention.

The software may also be manually updated. This procedure requires a computer with an Internet connection, a USB Flash Drive and the included USB connector. From the computer, go to www.Trane.com/residential and select Thermostat & Controls. Click on the 824, select Download Latest Version Software and follow the on-screen prompts.

6. Basic Operation

6.1 PI Control

The 824 Control uses proprietary control schemes to provide comfort and energy efficiency. The Control senses indoor temperature and determines capacity needed based on the following parameters:

- Mode of operation
- Proportional Error - distance from setpoint
- Integral Error - Time away from setpoint

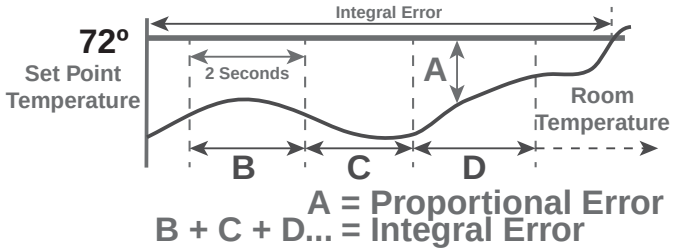

6.2 Load Value - Heating

The 824 Control uses proportional plus integral error to determine the amount of capacity required. The calculated capacity is displayed as load value. Load Value is a numerical representation of the needed capacity to maintain setpoint. The load value range is dependent on the applied system.

0-100	Single Stage Heat Pump Only
0-200	Two State Heat Pump Only
0-200	Single Stage Heat Pump + 1 Stage Electric/Wet Heat
0-300	Single Stage Heat Pump + 2 Stage Electric/Wet Heat
0-400	Single Stage Heat Pump + 3 Stage Electric/Wet Heat
0-300	Two Stage Heat Pump + 1 Stage Electric/Wet Heat
0-400	Two Stage Heat Pump + 2 Stage Electric/Wet Heat
0-500	Two Stage Heat Pump + 3 Stage Electric/Wet Heat
0-100	Single Stage Indoor Heat Only
0-200	Two Stage Indoor Heat Only
0-300	Three Stage Indoor Heat Only
0-175	Single Stage Heat Pump + 1 Stage Gas/Oil Heat
0-275	Single Stage Heat Pump + 2 Stage Gas/Oil Heat
0-375	Single Stage Heat Pump + 2 Stage Gas/Oil Heat
0-275	Two Stage Heat Pump + 1 Stage Gas/Oil Heat
0-375	Two Stage Heat Pump + 2 Stage Gas/Oil Heat
0-475	Two Stage Heat Pump + 3 Stage Gas/Oil Heat

6.3 Load Value - Cooling

0-100 Single Stage Compressor

0-200 Two-Stage Compressor

A Load Value of 50 represents a request of 50% demand for single stage cooling units (“Y”) or 50% demand for stage one of multistage cooling units (“Y1”).

A Load Value of 150 represents a request of 100% demand for stage one (“Y1”) and 50% demand of stage two (“Y2”) for multistage cooling units.

6.4 Duty Cycles

Indoor temperature control is achieved by duty cycling the equipment when the load value is less than 100% of the current stage of operation. The duty cycle rate is dependent on the calculated load value.

The duty cycle chart below indicates the number of cycles at 50% load (i.e. LV = 50).

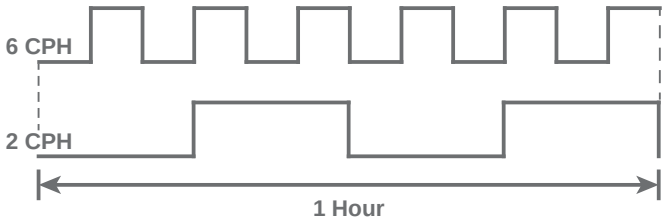

As with all PI-based controls the indoor temperature will fluctuate above and below the user selected setpoint to maintain comfort in the space. Adjusting the factory set CPH (Cycles per Hour) can affect how tight the Control operates around the setpoint. The CPH can be adjusted in the Installer Setup>Equipment Settings (2 – 6 CPH)

- Factory default for compressor operation is 3 CPH
- Factory default for indoor heat is 5 CPH

Effects of changing the cycle rates

Lower CPH results in longer run cycles with less cycling but the indoor temperature may deviate above and below setpoint.

Higher CPH results in tighter indoor temperature control but shorter, more frequent cycles.

6.5 Overshoot Clamp

The 824 Control will enforce an “off cycle” anytime the control overshoots more than 2.5°F. Once the indoor temperature is within 0.75°F of setpoint an “on cycle” is allowed dependent on load value and minimum off times.

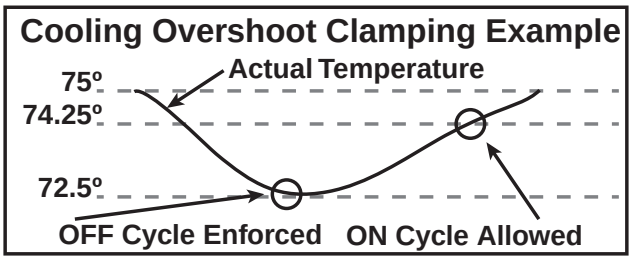

6.6 Stage Thresholds

The threshold to allow operation is a Load Value greater than 5 and operation is always terminated with a Load Value less than 1.

Load Value also determines when additional stages of operation are requested. To prevent rapid cycling between stages, a stage threshold is enforced. The stage threshold is dependent on the applied system.

COMPRESSOR STAGING THRESHOLDS

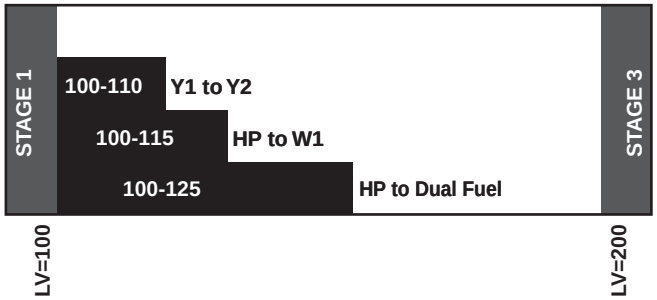

AUX ELECTRIC HEAT - STAGING THRESHOLDS

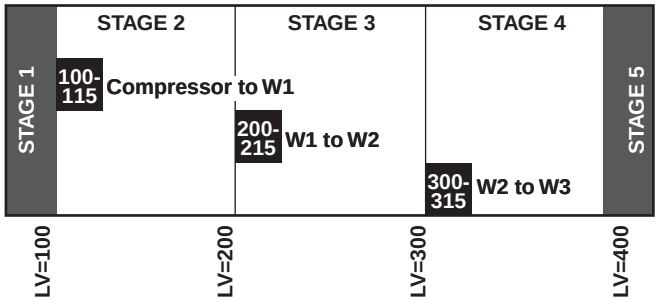

AUX FOSSIL HEAT - STAGING THRESHOLDS

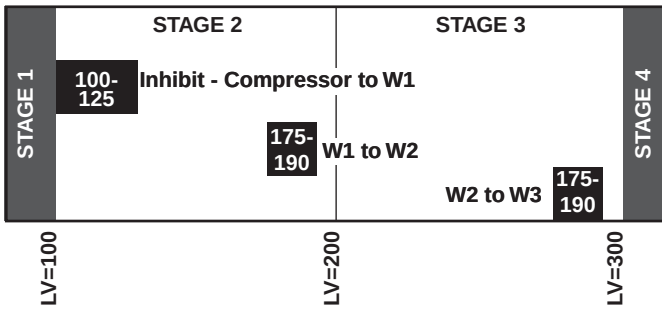

AUX WET HEAT - STAGING THRESHOLDS

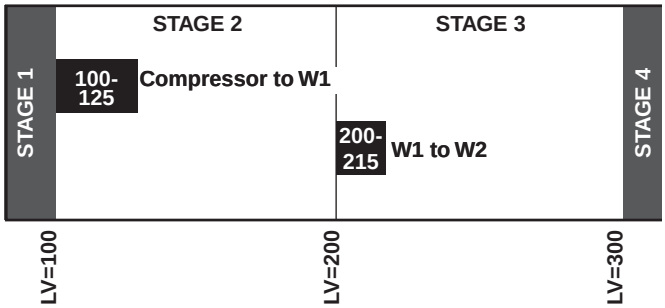

6.7 Stage Inhibits

When the stage threshold is exceeded, a stage inhibit is applied. The stage inhibit calculates the rate of recovery over a 15-minute period and determines if the next stage is required to meet the current demand. If the rate of recovery is great enough, a new 15-minute inhibit is enabled. The Control will not go to the next stage of operation until it determines that the current stage cannot satisfy the current demand. Stage inhibits only apply between compressor stages and compressor heat to indoor heat. Stage inhibits do not apply to indoor heat stages.

Stage inhibits can be disabled in the 824 Control Installer Setup>Comfort Settings.

Stage Inhibits - Compressor Staging

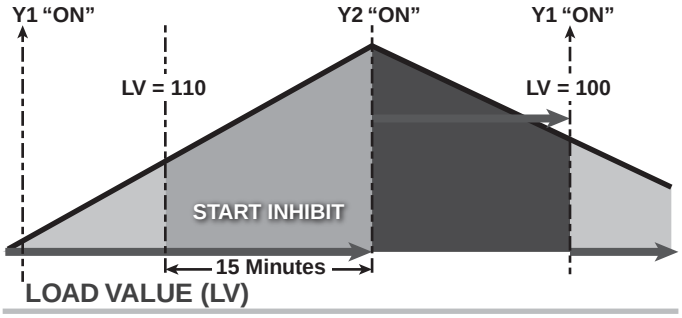

Stage Inhibits - Compressor to Aux Heat

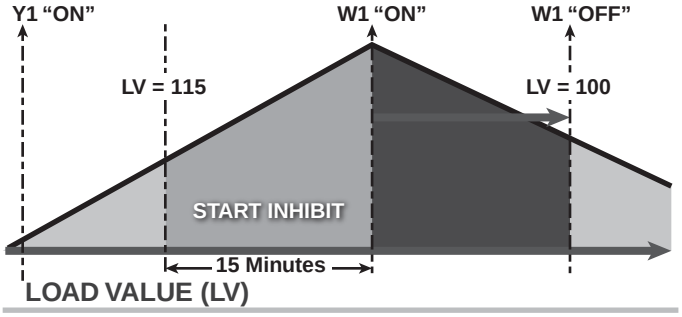

Stage Inhibits - Duel Fuel

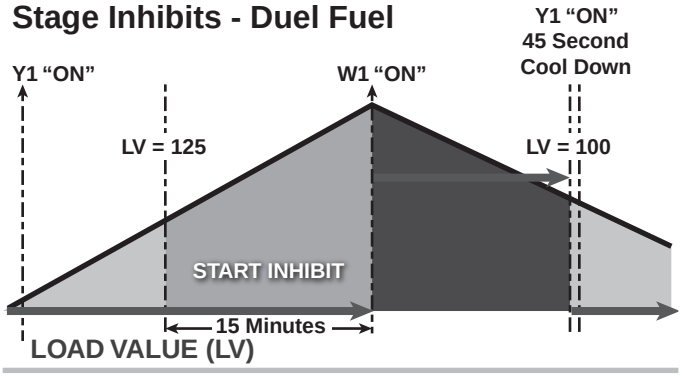

System Mode

The 824 has (5) System Modes which can be selected… Heating, Cooling, Off, Emergency Heat and Auto.

- Heating – System will only operate in heating mode
- Cooling – System will only operate in the cooling mode
- Off – System will not operate in heating or cooling mode
- Emergency Heating – System will operate the indoor heat source only (this is only available when the outdoor unit type is a heat pump)
- Auto - The Control will determine which mode of operation based on the following rules:
  - Heating - Indoor temperature is equal or less than heating setpoint
  - Cooling – Indoor temperature is equal to or greater than cooling setpoint or within 1°F of cooling setpoint

There is minimum deadband between heating and cooling setpoints of 3°F

6.8 Fan Mode

The 824 has three Fan Modes:

- Auto – Fan only runs with a call for heating or cooling
- On – Fan runs continuous
- Circ – Fan runs a user selected minimum amount of time each hour

6.9 Air Cleaner Mode

The 824 has three Air Cleaner modes:

- Auto – Air cleaner operates only with a call for fan operation
- Quick – Air cleaner will operate for 3-hours
- Allergy – Air cleaner will operate for 24-hours

7. Advanced Operation

7.1 Control Response Rate

Allows the user to select a set of higher proportional-integral control constants to increase the responsiveness of the Control. Selecting “Fast” will cause the Control to generate load value at a faster rate. Control Response rate can be adjusted in Installer Setup>Comfort Settings.

7.2 Dehumidification

The 824 utilizes the following methods for dehumidification:

- Air flow reduction (applies only to variable speed blowers) – If BK is connected, the 824 can reduce the system air flow by 30% anytime the indoor RH is higher than the cooling RH target. Air flow reduction is disallowed if the indoor temperature is more than 2°F above the cooling setpoint. Dehumidification is factory enabled in the Installer Setup>Comfort Settings.

  All “Fan Off” delays are also defeated when dehumidification is enabled and the indoor RH exceeds the cooling RH target.

- Overcooling (applies to variable speed and non-variable speed blowers) - If overcooling is enabled, the Control will allow a 0.1°F of overcooling for each 1% of RH error. A maximum amount of overcooling can be configured for 1°, 2° or 3°F.

EXAMPLE OF OVERCOOLING WITH MAXIMUM CONFIGURED AT 2°			
TARGET HUMIDITY	ACTUAL HUMIDITY	PERCENT OF RH ERROR	DEGREES OF OVERSHOOT
40%	45%	5%	0.5° Overshoot
40%	55%	15%	1.5° Overshoot
40%	65%	25%	2.0° Overshoot
40%	70%	30%	2.0° Overshoot

  When the system is actively overcooling, Dehumidification will be displayed on the 824 home screen. The maximum amount of overcooling is configured in Installer Setup>Comfort settings.

- Smart Continuous Fan (applies to variable speed and non-variable speed blowers) – If enabled, continuous fan operation will be interrupted when indoor RH exceeds desired cooling RH target. A humidity icon will be displayed along with the fan icon to indicate that continuous fan operation has been disabled due to high humidity conditions. Smart Continuous Fan will also interrupt the fan circulate mode when indoor humidity exceeds the desired cooling RH. This feature can be enabled in the Installer Settings>Comfort Settings>Smart Continuous Fan settings.

7.3 Dehumidifier Operation

The 824 has the ability to control a Whole-House Dehumidifier through the normally open dry AUX contacts on the 824 Control Sub-base. Control options are:

- Stand Alone Operation – Dehumidifier can operate independent from cooling operation as long as the 824 Control is in Cooling mode or Auto mode and the last call was cooling.

  If Stand Alone Operation is selected, the 824 Control allows the user to select whether the indoor fan operates with dehumidifier request.

- With Active Call for Cooling Only – Dehumidifier can only operate during an active call for cooling.

All dehumidifier control options are located in the Installer Setup>Accessories Settings.

7.4 Dual Fuel Operation

The 824 can control a dual fuel system without the need of an external dual fuel kit. An Outdoor Temperature Sensor must be installed and enabled for Restricted Modes to be available. The 824 Control options are:

- Non Restricted Mode – The Control will determine which mode of heat will operate to maintain comfort based on the calculated system load value. With a load value in compressor heating range the heat pump will operate and if the load value climbs to auxiliary heat range, the heat pump will cycle off and the auxiliary heat source will cycle on. Once the load value falls below the auxiliary heat range, the auxiliary heat will cycle off, and the heat pump will cycle back on.

- Restricted Mode (compressor heat only) – Once enabled an outdoor temperature lockout can be set to disable compressor heating operation. When the outdoor temperature falls below the compressor heat lockout the system will operate on auxiliary heat source only. At any temperature above the compressor heat lockout the system will operate the same as non-restricted mode, heat pump or auxiliary heat would be allowed based on system load value. Once the compressor heat is locked out, the outdoor temperature must rise at least 4° above the compressor heat lockout setting before allowing compressor heat again.

Restrict Compressor Heat Only

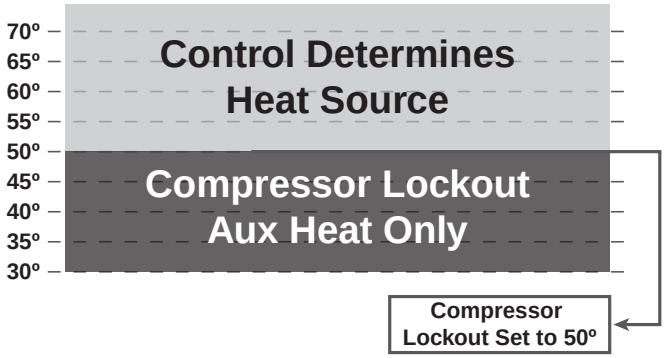

- Restricted Mode (compressor and auxiliary heat) – Once enabled an outdoor temperature lockout can be set to disable compressor heating below and disallow auxiliary heat operation above. When the outdoor temperature is above the auxiliary heat lockout, only compressor heat is allowed. When the outdoor temperature falls below the compressor heat lockout, only auxiliary heat is allowed. When the outdoor temperature is between the compressor heat lockout and auxiliary heat lockout the system will operate the same as non-restricted mode, heat pump or auxiliary heat is allowed based on system load value. There is a 10° minimum dead band between the compressor heat lockout and auxiliary heat lockout. Once the compressor heat or auxiliary heat is locked out, the outdoor temperature must rise or fall at least 4° above or below the lockout setting before allowing compressor or auxiliary heat again.

Restrict Compressor and Aux Heat

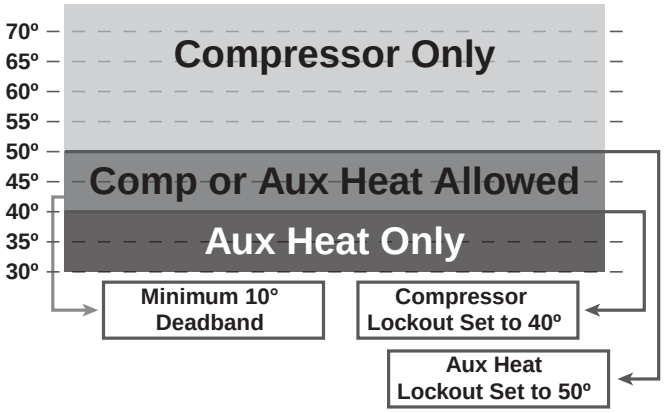

AN OUTDOOR TEMPERATURE SENSOR MUST BE ENABLED FOR LOCKOUT SETTINGS TO BE AVAILABLE. Lockout options are located in the Installer Setup>Lockout Settings.

7.5 Lockouts

The 824 has the following lockouts. **AN OUTDOOR TEMPERATURE SENSOR MUST BE ENABLED FOR LOCKOUT SETTINGS TO BE AVAILABLE.** Lockouts can be enabled in Installer Setup>Lockout Settings.

- Auxiliary Heat Lockout – Once enabled, select an outdoor temperature which disables auxiliary heat anytime the outdoor temperature is above the selected temperature. Compressor heat will be allowed.
- Compressor Lockout - Once enabled, select an outdoor temperature which disables compressor heat anytime the outdoor temperature is below the selected temperature. Indoor heat will be allowed.

  NOTE: If enabling Auxiliary Heat Lockout and Compressor Heat Lockout there is a minimum 10° dead band between the two settings.
- Defrost Heater Balance Point (W1) – Once enabled, select an outdoor temperature which disables all electric heat during defrost above the selected temperature.
- Defrost Heater Balance Point (W2) – Once enabled, select an outdoor temperature which disables 2nd and 3rd stages of electric heat during defrost above the selected temperature.
- Defrost Heater Balance Point (W3) – Once enabled, select an outdoor temperature which disables 3rd stage of electric heat during defrost above the selected temperature.
- Compressor Cooling 1st Stage Lockout – Once enabled, select an outdoor temperature which forces 2nd stage cooling operation.
- Compressor Heating 1st Stage Lockout – Once enabled, select an outdoor temperature which forces 2nd stage compressor heating operation.

- Furnace Heating 1st Stage Lockout – Once enabled, select an outdoor temperature which forces 2nd stage furnace heating operation.

7.6 Humidifier Operation

The 824 has the ability to control a humidifier through the normally open dry AUX Contacts on the Control Sub-base. Humidification is only enabled while in heating mode of operation. Control options are:

- RH Control – Dry contacts are closed anytime the indoor humidity is less than the heating target relative humidity.
- Frost Control – The 824 Control references the outdoor temperature and structure integrity to offset the heating target relative humidity. This helps to limit the risk of frost or condensation from forming on interior walls and windows. A scale of 1 to 10 is provided based on the insulation properties and expected leakage of the home (1=Leaky with poor insulation, 10=Very Tight with good insulation). An outdoor temperature sensor must be connected and enabled for frost control to be available.

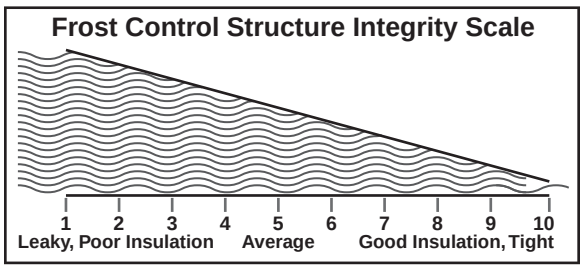

The 824 Control can be setup to allow humidification anytime in heating mode or only when actively heating. The airflow during Humidifier-only is factory set to 100% but can be adjusted between 35%-100% (this requires a variable speed indoor blower with BK connected). All humidifier control options are located in the Installer Setup>Accessories Settings.

7.7 Recovery

The 824 control utilizes a Stage Inhibit to limit equipment staging. This inhibit can be defeated in the following two manners.

7.7.1 Aggressive Recovery

Disables stage inhibits in heating and cooling mode anytime the setpoint is adjusted more than 2°F

7.7.2 Heating Aggressive Recovery

Disable stage inhibit in heating mode only when the outdoor temperature falls below the selected outdoor temperature

7.8 Ventilation Operation

The 824 has the ability to control a Ventilation system through the normally open dry AUX Contacts on the 824 Control Sub-base. The blower is not interlocked on a call for ventilation. The ventilation run time per hour can be adjusted to meet ASHRAE 62.2 standards. A temperature override can be set to prevent ventilation operation when the outdoor temperature exceeds the minimum or maximum outdoor temperature selections. If outdoor temperature overrides are enabled the user can select to accumulate the missed ventilation run time. Options are below:

- Accumulate missed ventilation run time in 4 hour increments and make up when the outdoor temperature is within the min/max settings.
- Accumulate missed ventilation run time in 24 hour increments and make up when the outdoor temperature is within the min/max settings
- Accumulate missed ventilation run time in 4 hour increments and make up at the end of 4 hour period.
- Accumulate missed ventilation run time in 24 hour increments and make up at the end of 24 hour period.

All Ventilation control options are located in the Installer Setup>Accessories Settings.

7.9 Warm Air Discharge

Enabling Warm Air Discharge with BK connected will reduce the variable speed blower air flow by 20% when in compressor heating operation. Warm Air Discharge only applies to compressor heating and is disabled when hydronic, fossil fuel or electric heat (including supplemental heat) modes are activated. Warm Air Discharge can be enabled in Installer Setup>Comfort Settings.

7.10 Wet Heat (Hydronic) Operation

A hot water coil can be applied to either a variable speed or non-variable speed indoor unit. The hot water coil can be the sole source of heat or used as auxiliary heat when applied with a heat pump. When applied with a heat pump, wet heat is considered auxiliary heat and will operate in-conjunction with heat pump heat. Switching the system mode to emergency heat would disable the heat pump and cycle the wet heat only.

If applied with a variable speed air handler with BK connected, the blower speed during wet heat only heating will vary based on the system load value. The airflow will range from 35% to 100% depending on the system load value. When applied with a heat pump, the blower speed during heat pump and wet heat operation will be the higher of the two air flows. There are separate blower “On” and “Off” delays for wet heat in the 824 Control.

The 824 Control is designed to operate forced air systems and should not be applied to non-forced air systems (radiant floors, radiators, etc…)

The hydronic heat blower delay options can be accessed by navigating to Installer > Setup > Airflow Settings.

8. Diagnostic Tools

8.1 Test Modes

Access Test Modes by navigating to Service Menu>Test Modes. All test modes will terminate automatically after 60 minutes or can be terminated manually at any time.

MODE	SETTINGS	DESCRIPTION
Test Blower	50%, 100%	Energize indoor blower at the selected speed
Test Cool	Stage 1 Stage 2	Energize the selected stage of cooling operation. The indoor blower will also operate at the speed required for the selected stage
Test Compressor Heat	Stage 1 Stage 2	Energize the selected stage of compressor heating operation. The indoor blower will also operate at the speed required for the selected stage
Test Indoor Heat	Stage 1 Stage 2 Stage 3	Energize the selected stage of indoor heating operation. The blower operation will be dependent on the indoor heat type: Electric - blower energized during test mode but the blower speed is controlled by the indoor unit Fossil - blower is controlled independently by the indoor unit during test mode Hydronic - blower is energized during test mode
Test Compressor and Indoor Heat	Stage 1 Indoor Heat Stage 2 Indoor Heat Stage 3 Indoor Heat	Energize all stages of compressor heat and selected stage of indoor electric heat/hydronic heat. The blower is energized and runs at the higher of the compressor heat air flow versus indoor heat air flow
More	AUX 1 AUX 2	Closes the normally open AUX contacts. The blower is not energized during this test mode

8.2 Save Logs

The 824 Control has the ability to log data on USB Flash Drive. Attach a USB Flash Drive to the included USB connector, plug it into the 824 Control and select Save Logs from the Service Menu.

The amount of data logged will be dependent on the number of days logged and the storage capability of the USB Flash Drive. Access Save Logs by navigating to Service Menu>Save Logs.

8.3 Diagnostics

Within the Diagnostic screen are two items related to alerts:

- Current Alerts – Alerts which are currently active
- Alert History – Cleared Alerts (last 30 days)

NOTE: Each alert will have a date/timestamp of when the alert was negated. The Date/Time stamp for Current Alerts is when the alert was asserted. For Alert History the date/timestamp is when the alert was negated.

From both screens the user can select an alert code and get additional information on the alert as well as a list of possible causes, similar to the Interactive Troubleshooting Guide located on ComfortSite/ASDealernet

All alerts are categorized by severity:

- **CRITICAL**
  - Loss of heating/cooling operation
  - Service call is required
  - Alert messages are displayed on the home screen and when closed, a flashing red icon is used to indicate alert condition.
- **MAJOR**
  - Reduced functionality - minimum operation is possible
  - Service call is not immediately required
  - Alert messages are not displayed on the home screen but a yellow icon is used to indicate alert condition.

NOTE: Critical and Major alerts can be displayed on the home screen by pressing the alert icon on the shortcut tool bar (top right of home screen).

- **NORMAL**
  - Functionality may be lost but should recover or the information is for diagnostic purposes / performance monitoring
  - Service call is not required
  - Normal alerts are only displayed in the Diagnostic screen

Diagnostics can be accessed by navigating to Service Menu>Diagnostics.

8.4 History

History is accessed by navigating to Service Menu>History

The History screen allows the technician to view cycle count and run time data for each mode and stage of operation. This data provides a snap-shot into system operations.

	TODAY	LAST 7 DAYS	CURRENT MONTH	LAST MONTH
Y1 COOLING	0[1]/0[2]	0[1]/0[2]	0[1]/0[2]	0[1]/0[2]
Y2 COOLING				
Y1 HEATING				
Y2 HEATING				
W1				
W2				
W3				
DEFROST CYCLES				

[1] Indicates cycle count
[2] Indicates cycle time in minutes

8.5 System Report

The System Report Screen provides technicians with important system operational data in one, concise screen. The data is provided in real-time and updates as the data changes.

The System Report Screen displays the following data points:

- System Status - mode and stage of operation
- Load Value
- Fan Status
- Indoor Temperature
- Indoor Relative Humidity
- Heating and Cooling Setpoints
- Relative Humidity Setpoints
- Dehumidifier Status
- Outdoor Temperature
- Outdoor Relative Humidity (Nexia™ connection required)

Currently Energized Terminals are displayed in green at the bottom of the System Report screen.

8.6 Restore Factory Defaults

This feature will delete all saved settings, both user and installer, and restore the 824 to its factory default settings. This also includes any Wi-Fi and Z-Wave device settings.

9. Troubleshooting

SYMPTOM	POSSIBLE CAUSES	ACTION
Control displays an alert code on the screen.	A critical or major alert is present.	Navigate to the Diagnostic screen on the 824 Control for a Problem Description and Possible Cause.
Display will not come on	Loss of 24VAC between R & B at the Control.	1) Check R & B wiring. 2) Check transformer for 24VAC output. 3) Check for broken or shorted thermostat wire.
Indoor temperature display is incorrect.	1) Indoor temperature display needs calibration. 2) Heat from touch screen is being trapped within the thermostat body. See section 4.1 for mounting location guidelines.	1) Calibrate temperature sensor from Sensor Settings or use a remote temperature sensor 2) Move Control away from competing air stream or use a remote indoor sensor.
Indoor humidity display is incorrect.	Indoor humidity display needs calibration.	Calibrate humidity sensor from the Sensor Settings.
Heating will not come on.	1) System mode is not set to Heat/Auto or setpoint is set too low. 2) Minimum off time delay is being enforced. 3) Heating system may require service.	1) Set mode to heat and raise the setpoint above the room temperature. 2) Wait for 5 minutes and recheck heating equipment. 3) Check/repair system.
Cooling will not come on.	1) System mode is not set to Cool/Auto or the setpoint is too high. 2) Minimum off time delay is being enforced. 3) Cooling system may require service.	1) Set mode to cool and lower the setpoint below the room temperature. 2) Wait for 5 minutes and recheck cooling equipment. 3) Check/repair system.
Heating or Cooling is displayed, but no warm or cool air is coming from the registers.	1) There is a fan delay as the heating or cooling equipment turns on. 2) Equipment is not working properly.	1) Wait a minute for blower delays and recheck registers. 2) Check/repair system.
Fan runs all the time	1) Fan mode is set to On, Circulate or Clean mode 2) Field wiring issue 3) There is a failure in the indoor unit	1) Check Control settings to see if fan is set to On, Circulate or Clean mode. 2) Check field wiring 3) Check indoor unit for failures (such as tripped heating limit).
“+” symbol appears on Home Screen beneath Indoor Temperature readout	Both compressor heat and indoor heat are being called simultaneously	No action required, symbol is for informational purposes only
Fan is set to ON but not running.	1) Humidity Control is engaged. 2) Field wiring issue 3) Blower motor is not functioning.	1) If indoor humidity is higher than desired setpoint, the blower will cycle off with the equipment. A humidity icon will be displayed on the Fan Mode button when the blower operation is being inhibited due to high humidity. 2) Check field wiring 3) Check/repair system.
Cooling or Heating cycles too fast or too slow (narrow or wide temperature swings).	1) Check the location of the Control for drafts. 2) Cycles per hour is improperly set.	1) Seal air leaks behind Control. Relocate Control or apply remote indoor temperature sensor. 2) Adjust cycle rates in the Advanced Installer Setup.
Heat pump is not turning on; only furnace or electric heat strips are running.	1) Outdoor temperature is below compressor lockout temperature setting. 2) System mode is set to Emergency Heat. 3) Outdoor Unit may require service.	1) Adjust the compressor lockout temperature setting if desired. 2) Check/repair outdoor temperature sensor or wiring.
Cannot change system mode to desired setting.	Equipment is not configured properly.	Check the standard installer set up screen to ensure equipment is properly configured.
Screen does not respond properly to a button press	1) Screen is out of calibration. 2) Internal Control fault	1) Remove Control from sub base and reset. Follow the calibration instructions when the Control reboots. 2) Reset/Cycle power to Control by removing it from the subbase, waiting 10 seconds and replacing.

10. Notices

10.1 FCC Notice

INFORMATION TO USER

This device complies with Part 15 of the FCC Rules. Operation is subject to the following two conditions: (1) This device may not cause harmful interference and (2) This device must accept any interference received, including interference that may cause undesired operation. The antenna(s) used for this transmitter must be installed to provide a separation distance of at least 20 cm from all persons and must not be collocated or operating in conjunction with any other antenna or transmitter.

This equipment has been tested and found to comply with the limits for Class B Digital Device, pursuant to Part 15 of the FCC Rules. These limits are designed to provide reasonable protection against harmful interference in a residential installation. This equipment generates and can radiate radio frequency energy and, if not installed and used in accordance with the instructions, may cause harmful interference to radio communications. However, there is no guarantee that interference will not occur in a particular installation. If this equipment does cause harmful interference to radio or television reception, which can be determined by turning the equipment off and on, the user is encouraged to try to correct the interference by one or more of the following measures.

- Reorient or relocate the receiving antenna
- Increase the separation between the equipment and receiver
- Connect the equipment into an outlet on a circuit different from that to which the receiver is connected
- Consult the dealer or an experienced radio/TV technician for help

Any changes or modifications not expressly approved by the party responsible for compliance could void the user's authority to operate the equipment.

10.2 IC Notice

This device complies with Industry Canada license-exempt RSS standard(s). Operation is subject to the following two conditions: (1) this device may not cause interference, and (2) this device must accept any interference, including interference that may cause undesired operation of the device.

Le présent appareil est conforme aux CNR d'Industrie Canada applicables aux appareils radio exempts de licence. L'exploitation est autorisée aux deux conditions suivantes : (1) l'appareil ne doit pas produire de brouillage, et (2) l'utilisateur de l'appareil doit accepter tout brouillage radioélectrique subi, même si le brouillage est susceptible d'en compromettre le fonctionnement.

The manufacturer has a policy of continuous product and product data improvement and it reserves the right to change design and specifications without notice.

Representative-only illustrations included in this document.
11/2017

American Standard
HEATING & AIR CONDITIONING

American Standard Gold 824 Connected Control

ACONT824 Installation Guide

ALL phases of this installation must comply with NATIONAL, STATE AND LOCAL CODES

WORKS WITH NEXIA™ HOME INTELLIGENCE

IMPORTANT — This Document is customer property and is to remain with this unit.

These instructions do not cover all variations in systems or provide for every possible contingency to be met in connection with the installation. Should further information be desired or should particular problems arise which are not covered sufficiently for the purchaser's purposes, the matter should be referred to your installing dealer or local distributor.

11-HD13D1-10-EN

Contents

1. Safety 2
2. Product Specifications 3
3. General Information 3
3.1 Overview 3
3.2 Contents 3
3.3 Accessories 3
4. Installation 4
4.1 Location 4
4.2 Network Connections 4
4.3 Mounting 4
4.4 Wiring 5
4.5 Heat/Cool Applications 7
4.6 Heat Pump Applications 16
4.7 Dual Fuel Applications 23
5. System Setup 26
5.1 Power-Up Sequence 26
5.2 Guided Setup Wizards 26
5.3 Smart Optimization 26
5.4 Installer Setup Screens 27
5.4.1 Group 1 Standard Settings 27
5.4.2 Group 2 Equipment Settings 27
5.4.3 Group 3 Sensor Settings 27
5.4.4 Group 4 Accessories Settings 28
5.4.5 Group 5 Comfort Settings 29
5.4.6 Group 6 Airflow Settings 30
5.4.7 Group 7 Lockout Settings 31
5.5 Service Reminders 31
5.6 Dealer Code 31
5.7 Software Updates 31
6. Basic Operation 32
6.1 PI Control 32
6.2 Load Value - Heating 32
6.3 Load Value - Cooling 32
6.4 Duty Cycles 32
6.5 Overshoot Clamp 32
6.6 Stage Thresholds 33
6.7 Stage Inhibits 33
6.8 Fan Mode 34
6.9 Air Cleaner Mode 34
7. Advanced Operation 35
7.1 Control Response Rate 35
7.2 Dehumidification 35
7.3 Dehumidifier Operation 35
7.4 Dual Fuel Operation 35
7.5 Lockouts 36
7.6 Humidifier Operation 37
7.7 Recovery 37
7.7.1 Aggressive Recovery 37
7.7.2 Heating Aggressive Recovery 37
7.8 Ventilation Operation 37
7.9 Warm Air Discharge 37
7.10 Wet Heat (Hydronic) Operation 37
8. Diagnostic Tools 38
8.1 Test Modes 38
8.2 Save Logs 38
8.3 Diagnostics 38
8.4 History 38
8.5 System Report 39
8.6 Restore Factory Defaults 39
9. Troubleshooting 40
10. Notices 41
10.1 FCC Notice 41
10.2 IC Notice 41

1. Safety

NOTE: Use 18-gauge color-coded thermostat cable for proper wiring. Shielded cable is not typically required.

Keep this wiring at least one foot away from large inductive loads such as Electronic Air Cleaners, motors, line starters, lighting ballasts and large distribution panels.

⚠ WARNING

This information is intended for use by individuals possessing adequate backgrounds of electrical and mechanical experience. Any attempt to repair a central air conditioning product may result in personal injury and/or property damage. The manufacturer or seller cannot be responsible for the interpretation of this information, nor can it assume any liability in connection with its use.

Failure to follow these wiring practices may introduce electrical interference (noise) which can cause erratic system operation.

All unused thermostat wire to be grounded at indoor unit chassis ground only. Shielded cable may be required if the above wiring guidelines cannot be met. Ground only one end of the shield to the system chassis.

⚠ WARNING

LIVE ELECTRICAL COMPONENTS!
During installation, testing, servicing, and troubleshooting of this product, it may be necessary to work with live electrical components. Failure to follow all electrical safety precautions when exposed to live electrical components could result in death or serious injury.

2. Product Specifications

SPECIFICATION	DESCRIPTION
Product Model	ACONT824
Product	Gold 824 824 Connected Control
Size	5-1/2” x 3-3/8” x 1” (WxHxD)
Configurations	Heat Pump, Heat/Cool, Dual Fuel, Heat Only, Cooling Only
Maximum Number of Stages	5 Stages Heat, 2 Stages Cooling
Storage/Operating Temperature	-40°F to 175°F, 5% to 95% RH non-condensing
Input Power	24VAC
Power Consumption	7VA*
Wire Usage	18 AWG
System Modes	Auto, Heating, Cooling, Off, Emergency Heat
Fan Modes	Auto, On, Circulate
Cooling Setpoint Temperature Range	60°F to 99°F, 1°F resolution
Heating Setpoint Temperature Range	55°F to 90°F, 1°F resolution
Indoor Temperature Display Range	-40°F to 122°F
Outdoor Temperature Display Range	-40°F to 140°F
Indoor Humidity Display Range	0% to 100%, 1% resolution
Minimum Cycle Off Time Delay	Compressor: 5 minutes, Indoor Heat: 1 minute

*On every application, 24VAC loads should be reviewed to be sure the indoor unit control power transformer is adequately sized.

3. General Information

3.1 Overview

The 824 Connected Control has a 4.3” color touch screen and offers a full-featured and easy-to-use interface. From individual daily schedules to remote access, the 824 is one of the most advanced 24VAC Controls available.

3.2 Contents

- 1-Control
- 1-Sub-base
- 2-#6 18X1 Phillips slotted head mounting screws
- 2-#6x1 Nylon Drywall Anchors
- 1-Installation Guide
- 1-Quick Start Guide
- RJ-45 Holder and Screw
- 1-USB “On-the Go” Adapter Cable (Micro USB plug to Standard USB receptacle)

3.3 Accessories

- Wired Remote Indoor Sensor (ZZSENSAL0400AA)
- Wired Remote Outdoor Sensor (BAYSEN01ATEMPA)
- Bonnet Thermostat model THT1248 (BAYSEN03ATEMPAA)

4. Installation

4.1 Location

The 824 is designed for installation in climate controlled living spaces. Place the unit in a central location with good circulation.

For proper temperature sensing, avoid exposing the 824 to heat radiated from lamps, sun light, fireplaces or any other radiant heat source.

Avoid locations close to windows, behind doors or alcoves with poor air circulation, adjoining outside walls, or doors that lead to the outside.

Select a location that prevents the 824 from being directly exposed to air currents from supply registers or ceiling fans.

Mount the Control on a section of interior wall that does not contain hot or cold water pipes or duct work.

Important: The 824 Control utilizes a 4.3” color touch screen. This screen generates heat which is vented out the top of the Control utilizing natural convection. If an air source is directed at or from above, heat from the screen can be trapped within the Control and can cause the indoor temperature to be biased. (Refer to Figure 1 on page 4.)

FIGURE 1. PLACEMENT OF THE 824

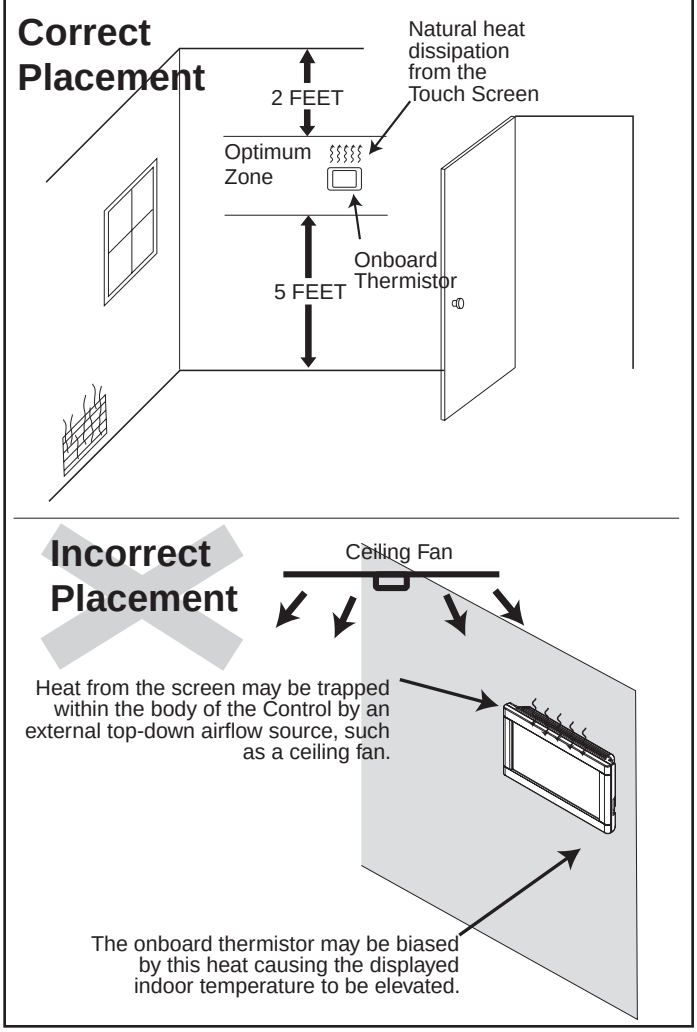

4.2 Network Connections

To take advantage of the full range of features on the 824 Control, it should be connected to the Internet. This is possible using either a wireless or a wired connection.

Wireless Connections

If the 824 Control will be connected to the Internet using the built-in wireless feature, choose a mounting location that ensures adequate signal strength from the Internet router.

Tips to Help Maximize Signal Strength:

- Do not mount the Control more than 30 feet from the wireless router
- There should be no more than three interior walls between the Control and the router.
- Do not mount the Control in areas where electromagnetic emissions from other devices, appliances or wiring can interfere with the Control’s communication. (i.e. wireless phones, security systems, wireless Internet cameras).
- Do not mount the Control in recessed areas, near metal objects, or near structures. (i.e. doors, appliances, entertainment centers or shelving units).
- Do not mount the Control closer than 2 inches to any pipes, duct work, or other metal obstructions.
- Do not have metal obstructions, concrete or brick walls between the Control and the router.

Refer to the 824 User Guide for additional information on connecting the 824 to the Internet.

Wired Connections

The 824 Control may be connected to the Internet using its built-in RJ-45 connector. When using a wired connection, verify that a CAT 5 or better Ethernet cable with a male RJ-45 connector is present from the router to the Control.

4.3 Mounting

Follow these steps to mount the 824 Control to the wall.

1. Turn OFF all power to heating and cooling equipment.
2. If an existing thermostat is being replaced:
   a. Remove the existing thermostat from the wall.
   b. Record color and terminal marking of each wire.
   c. Disconnect the wires from the existing thermostat being careful not to allow them to fall back into the wall.
3. Carefully pry the Sub-base away from the 824 Control using a small flat-blade screwdriver. Note that the tight fit is normal and ensures that the Control is held securely to the Sub-base when mounted on the wall.
4. Route the wires through the opening on the Sub-base.
5. If using a wired Internet connection, route the Ethernet cable through the opening.

6. Place the Sub-base against the wall in the desired location and mark the wall through the mounting holes. If you are using a wired Internet connection, be sure to mark the cutout for the RJ-45 connector (see Figure 2 on page 5).
7. Drill the holes in the wall where marked.

If you are using a wireless Internet connection, skip to step 9.

8. When using a wired Ethernet connection, follow these step and refer to Figure 3 on page 5.
   a. With the Sub-base and RJ-45 holder oriented as shown, press the holder into the Sub-base.
   b. Slide the holder to the right so it snaps in place.
   c. Secure the holder with the provided screw.
   d. Insert the RJ-45 Connector into the RJ-45 holder until it snaps into place.
9. Mount the Sub-base to the wall using included mounting screws and drywall anchors. An optional mounting hole is available for more secure mounting, if needed. Make sure all wires extend through the hole in the Sub-base see Figure 4 on page 5.

4.4 Wiring

1. Adjust the length and position of each wire to reach the proper terminal on the connector block of the Sub-base. Strip 1/4” of insulation from each wire. Do not allow adjacent wires to short together when connected.
2. Match and connect control wires to the proper terminals on the connector block. Refer to Field Wiring Diagrams included in this document.
3. Push excess wire back into the wall and seal the hole to prevent air leaks. NOTE: Air Leaks in the wall behind the Control can cause improper operation.
4. Attach the Control to the Sub-base.
5. Turn ON power to the heating and cooling equipment.

FIGURE 2. MARK THE MOUNTING HOLES

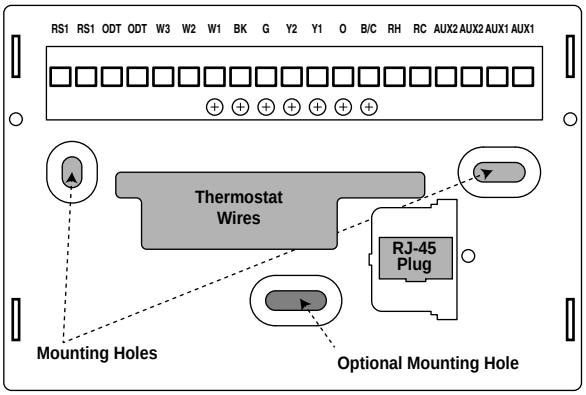

FIGURE 3. ATTACH RJ-45 HOLDER TO SUB-BASE

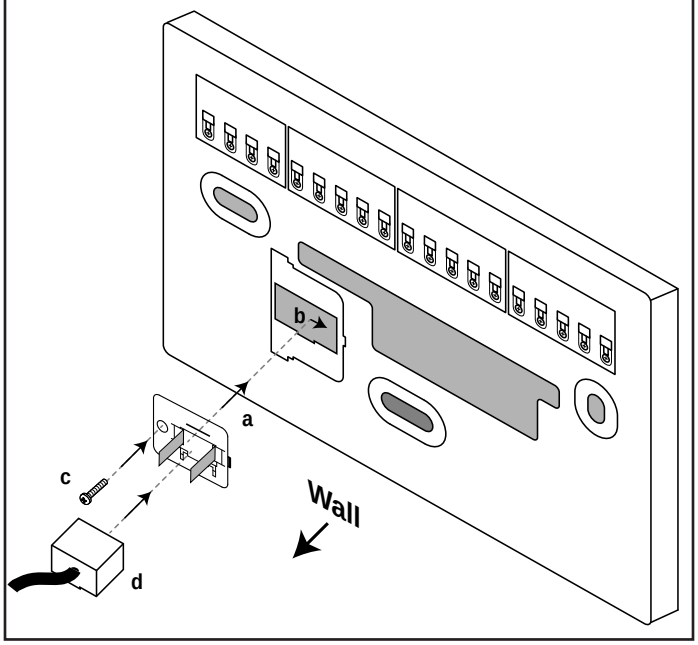

FIGURE 4. MOUNT THE SUB-BASE TO THE WALL

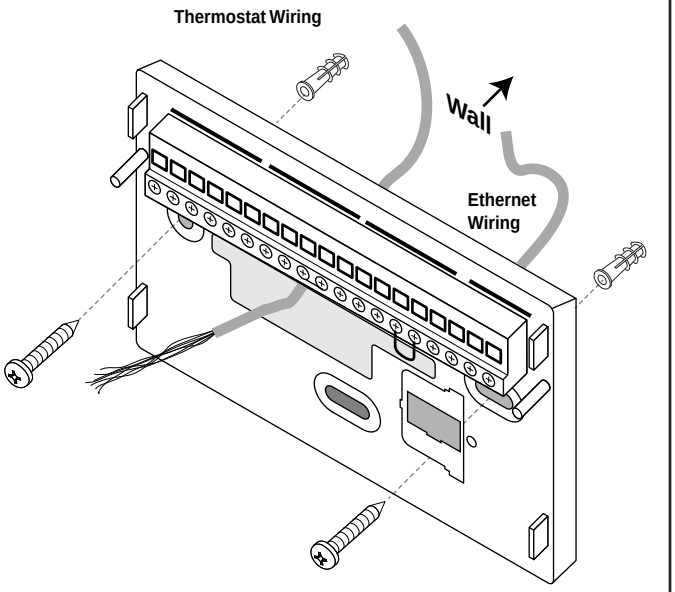

Field Wiring Connection Diagrams

Heat/Cool Diagrams

PAGE	DIAGRAM	DESCRIPTION
7	DIAGRAM 1	1 OR 2 STAGE COOLING W/TAM7 MODEL VARIABLE SPEED AIR HANDLER
7	DIAGRAM 2	1 STAGE COOLING W/GAM5A OR TAM4 MODEL AIR HANDLER
8	DIAGRAM 3	1 STAGE COOLING W/GAM5B MODEL AIR HANDLER
8	DIAGRAM 4	2 STAGE COOLING W/GAM5B MODEL AIR HANDLER
9	DIAGRAM 5	1 STAGE COOLING W/GAF2-S MODEL AIR HANDLER
9	DIAGRAM 6	1 STAGE COOLING W/GAF2-36M MODEL AIR HANDLER
10	DIAGRAM 7	1 STAGE COOLING W/GAT2 & GAM2 MODEL AIR HANDLER
10	DIAGRAM 8	1 STAGE COOLING W/TEM3 MODEL AIR HANDLER
11	DIAGRAM 9	1 STAGE COOLING W/TEM4 AIR HANDLER
11	DIAGRAM 10	1 OR 2 STAGE COOLING W/TEM6 AIR HANDLER
12	DIAGRAM 11	1 STAGE W/COOLING GAS FURNACE
12	DIAGRAM 12	1 OR 2 STAGE COOLING W/VARIABLE SPEED GAS FURNACE
13	DIAGRAM 13	1 OR 2 STAGE COOLING WITH S9V2 FURNACE
13	DIAGRAM 14	PACKAGE 1 OR 2 STAGE HEAT/COOL W/VARIABLE SPEED BLOWER
14	DIAGRAM 15	PACKAGE 1 STAGE HEAT/COOL W/NON-VARIABLE SPEED BLOWER
14	DIAGRAM 16	AMERISTAR 1 STAGE COOLING

Heat Pump Diagrams

PAGE	DIAGRAM	DESCRIPTION
15	DIAGRAM 17	1 OR 2 STAGE HEAT PUMP W/TAM7 MODEL AIR HANDLER
15	DIAGRAM 18	1 STAGE HEAT PUMP W/GAM5A OR TAM4 MODEL AIR HANDLER
16	DIAGRAM 19	1 STAGE HEAT PUMP W/GAM5B MODEL AIR HANDLER
16	DIAGRAM 20	2 STAGE HEAT PUMP W/GAM5B MODEL AIR HANDLER
17	DIAGRAM 21	1 STAGE HEAT PUMP W/GAF2-S MODEL AIR HANDLER
17	DIAGRAM 22	1 STAGE HEAT PUMP W/GAF2-36M MODEL AIR HANDLER
18	DIAGRAM 23	1 STAGE HEAT PUMP W/GAT2 & GAM2 MODEL AIR HANDLER
18	DIAGRAM 24	1 STAGE HEAT PUMP W/TEM3 MODEL AIR HANDLER
19	DIAGRAM 25	1 STAGE HEAT PUMP W/TEM4 AIR HANDLER
19	DIAGRAM 26	1 OR 2 STAGE HEAT PUMP W/TEM6 VARIABLE SPEED AIR HANDLER
20	DIAGRAM 27	PACKAGE 1 OR 2 STAGE HEAT PUMP W/VARIABLE SPEED BLOWER
20	DIAGRAM 28	PACKAGE 1 STAGE HEAT PUMP W/NON-VARIABLE SPEED BLOWER
21	DIAGRAM 29	AMERISTAR 1 STAGE HEAT PUMP

Dual Fuel Diagrams

PAGE	DIAGRAM	DESCRIPTION
22	DIAGRAM 30	1 OR 2 STAGE HEAT PUMP W/VARIABLE SPEED GAS FURNACE
22	DIAGRAM 31	1 STAGE HEAT PUMP W/NON-VARIABLE SPEED GAS FURNACE
23	DIAGRAM 32	1 OR 2 STAGE HEAT PUMP W/S9V2 FURNACE
23	DIAGRAM 33	PACKAGE 1 OR 2 STAGE DUAL FUEL W/VARIABLE SPEED BLOWER

4.5 Heat/Cool Applications

Diagram 1 - 1 or 2 Stage Cooling w/TAM7 Model Variable Speed Air Handler

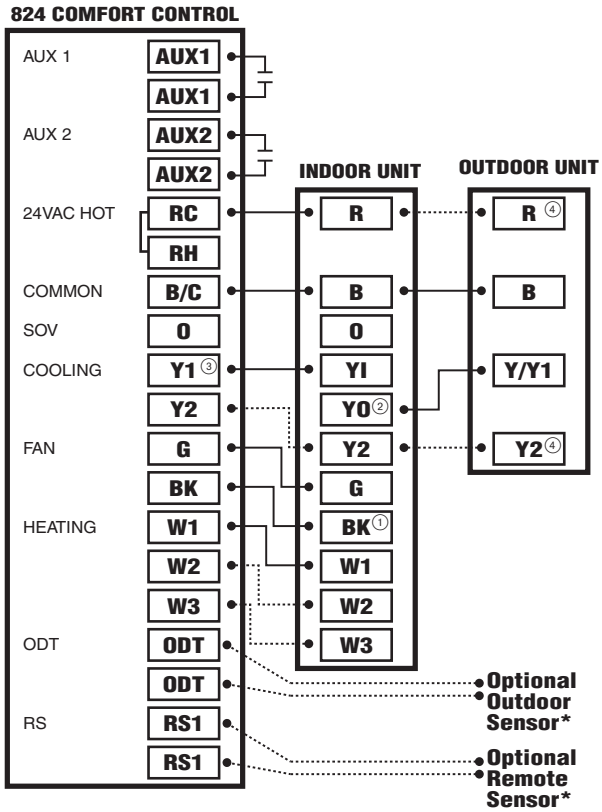

NOTES:

1. Cut and remove the BK jumper at the indoor unit AFC Board
2. YI and YO connections must be made as shown for freeze protection and internally mounted condensate overflow circuits to function properly
3. If a 3rd party overflow condensate switches are installed, wire between Y1 of the 824 and YI of the airflow control board
4. R and Y2 connections at outdoor unit are required only for two stage units

*Caution: Do not run Outdoor/Remote sensor wires in the same bundle with HVAC wires. Also, keep away from high voltage wiring to avoid interference.

Diagram 2 - 1 Stage Cooling w/GAM5A or TAM4 Model Air Handler

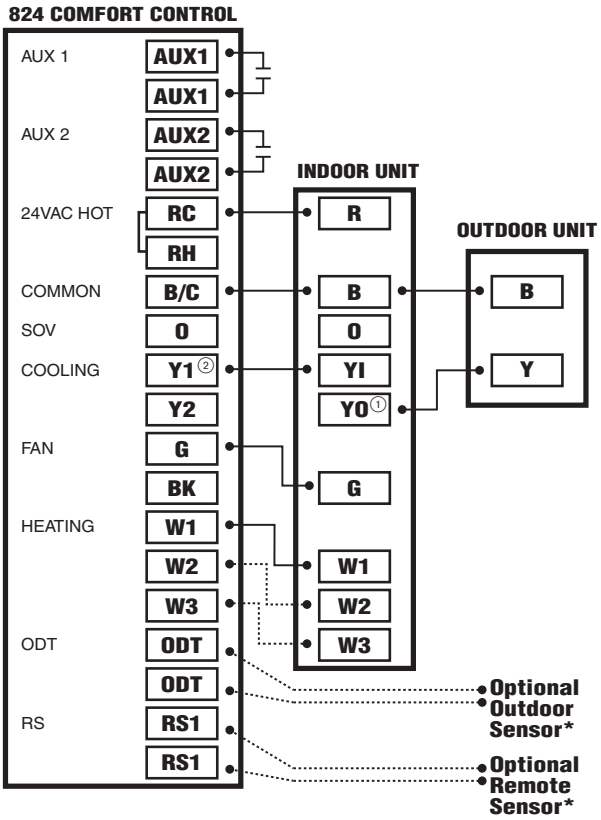

NOTES:

1. YI and YO connections must be made as shown for freeze protection and internally mounted condensate overflow circuits to function properly
2. If 3rd party overflow condensate switches are installed, wire between Y1 of the 824 and YI of the air handler

*Caution: Do not run Outdoor/Remote sensor wires in the same bundle with HVAC wires. Also, keep away from high voltage wiring to avoid interference.

Diagram 3 - 1 Stage Cooling w/GAM5B Model Air Handler

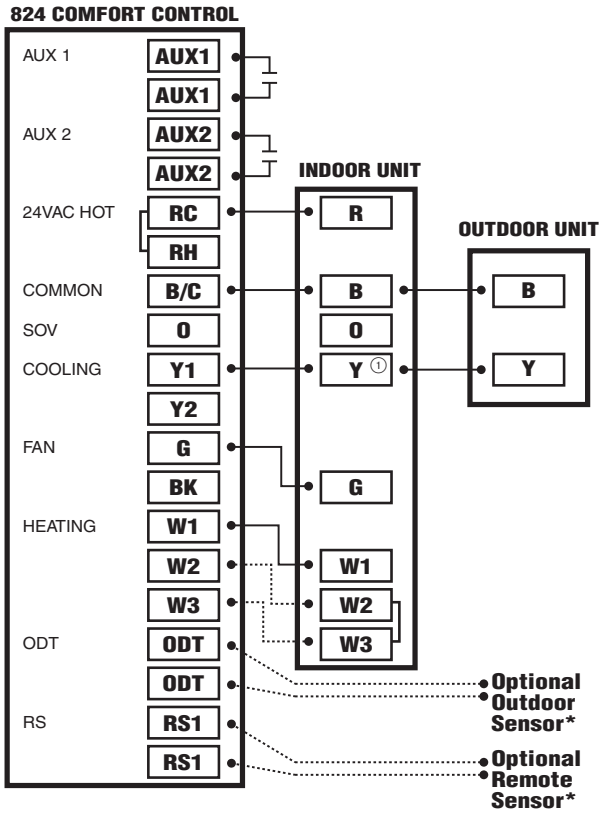

NOTES:

1. Y terminal must be connected at indoor unit for selected compressor air flow

*Caution: Do not run Outdoor/Remote sensor wires in the same bundle with HVAC wires. Also, keep away from high voltage wiring to avoid interference.

Diagram 4 - 2 Stage Cooling w/GAM5B Model Air Handler

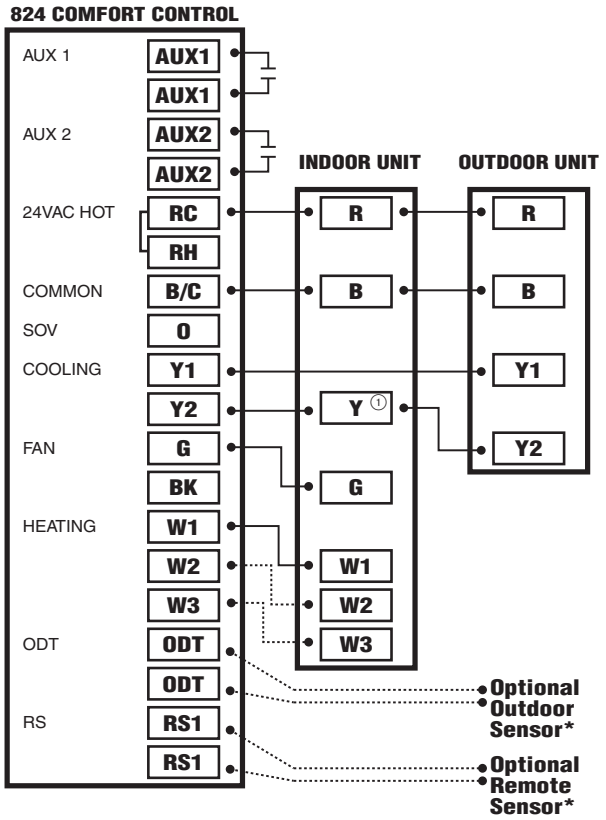

NOTES:

1. Y terminal must be connected at indoor unit for selected compressor air flow

*Caution: Do not run Outdoor/Remote sensor wires in the same bundle with HVAC wires. Also, keep away from high voltage wiring to avoid interference.

Diagram 5 - 1 Stage Cooling w/GAF2-S Model Air Handler

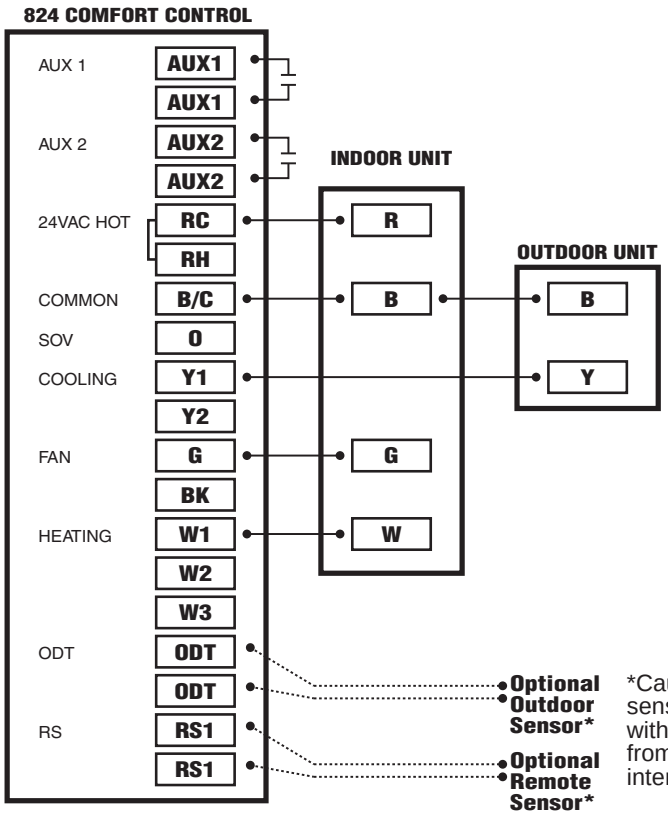

*Caution: Do not run Outdoor/Remote sensor wires in the same bundle with HVAC wires. Also, keep away from high voltage wiring to avoid interference.

Diagram 6 - 1 Stage Cooling w/GAF2-36M Model Air Handler

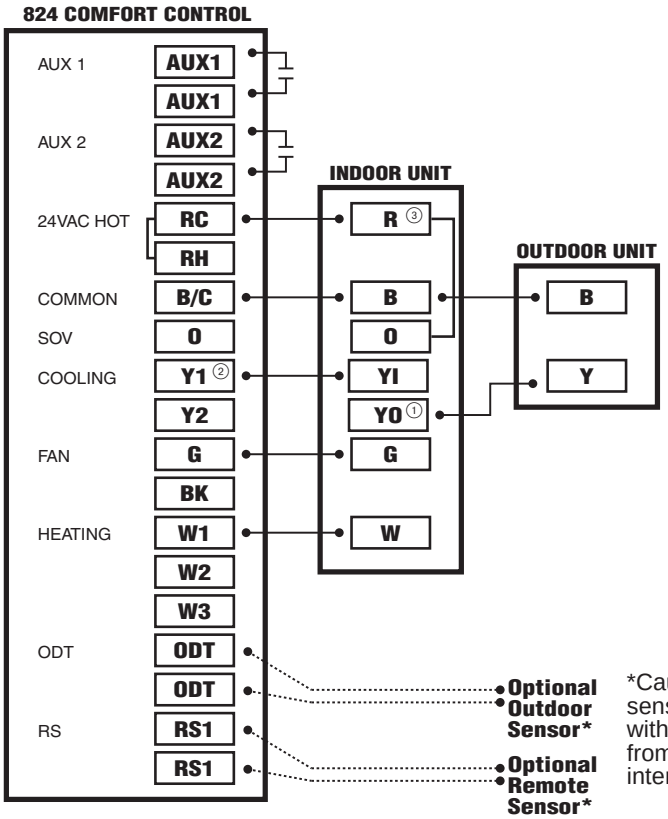

NOTES:

1. YI and YO connections must be made as shown for freeze protection and internally mounted condensate overflow circuits to function properly
2. If 3rd party overflow condensate switches are installed, wire between Y1 of the 824 and YI of the air handler
3. Jumper R and O must be installed for blower to run at cooling airflow

*Caution: Do not run Outdoor/Remote sensor wires in the same bundle with HVAC wires. Also, keep away from high voltage wiring to avoid interference.

Diagram 7 - 1 Stage Cooling w/GAT2 & GAM2 Model Air Handler

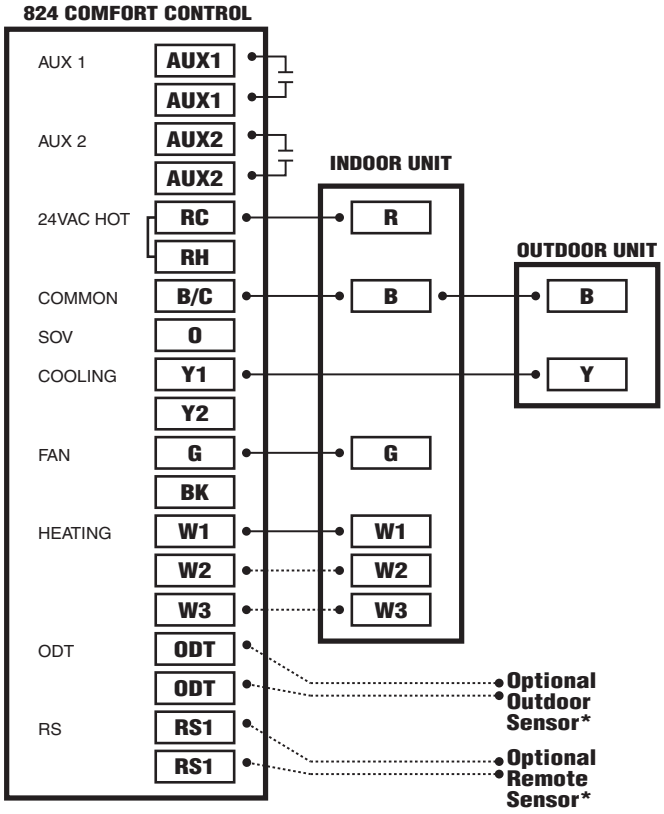

*Caution: Do not run Outdoor/Remote sensor wires in the same bundle with HVAC wires. Also, keep away from high voltage wiring to avoid interference.

Diagram 8 - 1 Stage Cooling w/TEM3 Model Air Handler

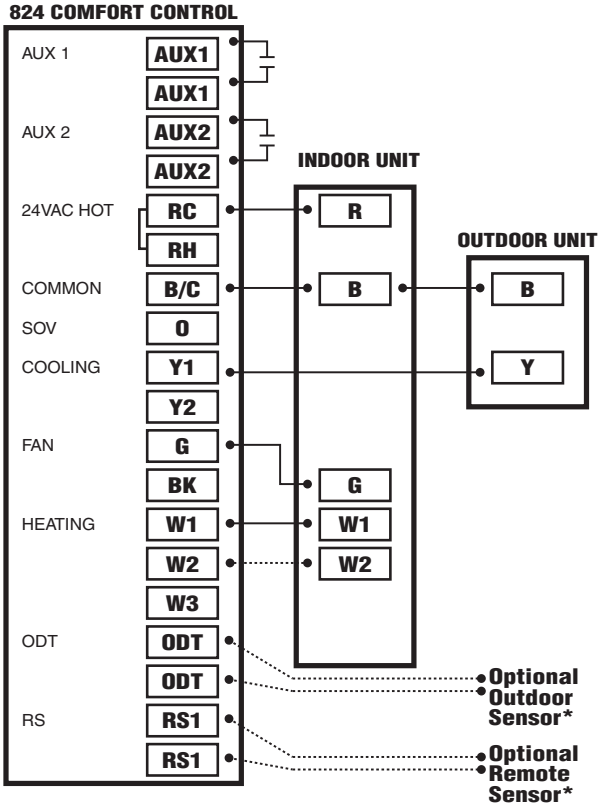

*Caution: Do not run Outdoor/Remote sensor wires in the same bundle with HVAC wires. Also, keep away from high voltage wiring to avoid interference.

Diagram 9 - 1 Stage Cooling w/TEM4 Air Handler

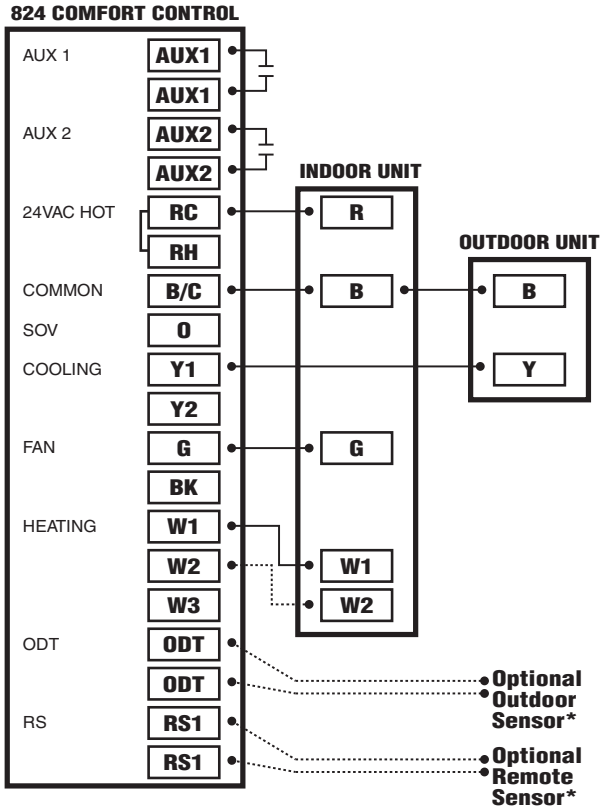

*Caution: Do not run Outdoor/Remote sensor wires in the same bundle with HVAC wires. Also, keep away from high voltage wiring to avoid interference.

Diagram 10 - 1 or 2 Stage Cooling w/TEM6 Air Handler

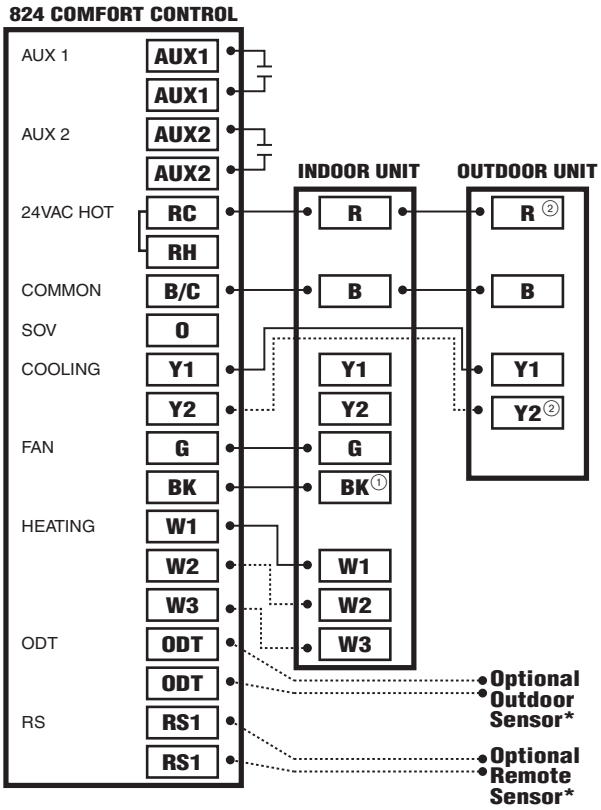

NOTES:

1. Cut and remove the BK jumper at the indoor unit
2. R & Y2 connections at outdoor are only required for two stage units

*Caution: Do not run Outdoor/Remote sensor wires in the same bundle with HVAC wires. Also, keep away from high voltage wiring to avoid interference.

Diagram 11 - 1 Stage w/Cooling Gas Furnace

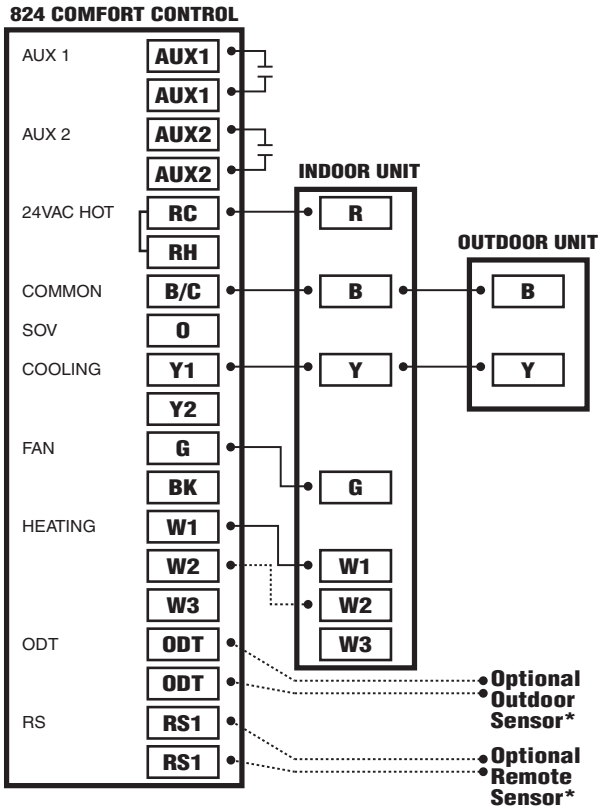

*Caution: Do not run Outdoor/Remote sensor wires in the same bundle with HVAC wires. Also, keep away from high voltage wiring to avoid interference.

Diagram 12 - 1 or 2 Stage Cooling w/Variable Speed Gas Furnace

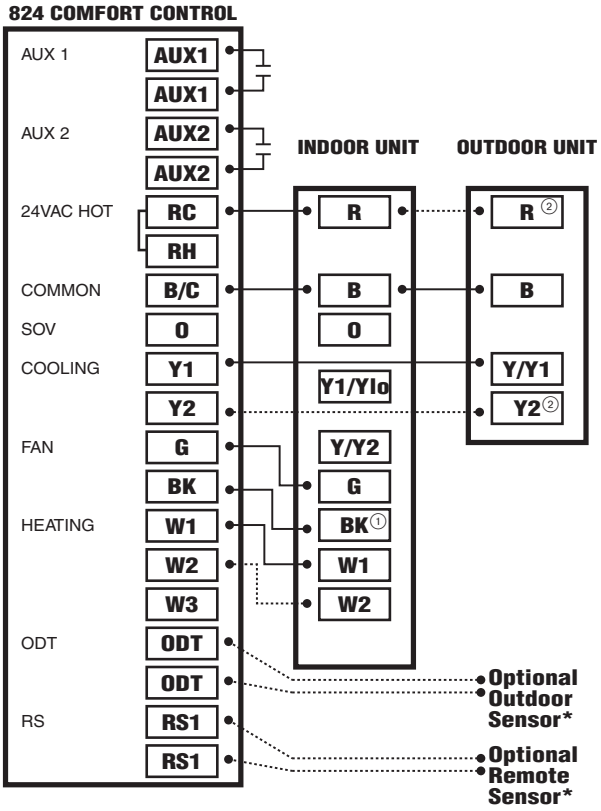

NOTES:

1. Cut and remove the factory installed BK jumper at the indoor unit IFC Board (some units may require DIP switch settings)
2. R & Y2 connections at outdoor are only required for two stage units

*Caution: Do not run Outdoor/Remote sensor wires in the same bundle with HVAC wires. Also, keep away from high voltage wiring to avoid interference.

Diagram 13 - 1 or 2 Stage Cooling with S9V2 Furnace

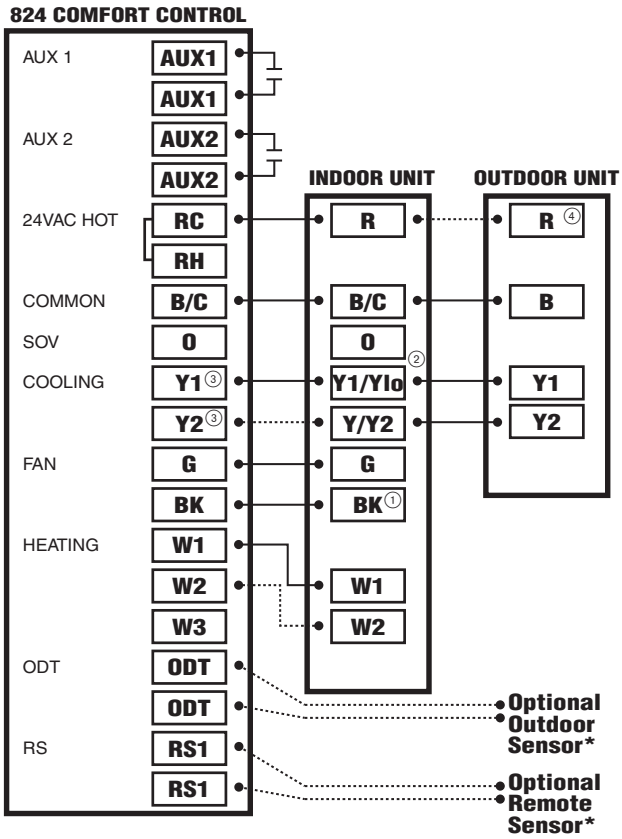

NOTES:

1. Cut and remove the BK jumper at the indoor unit
2. Remove the factory Y1-O jumper on the indoor unit for heat pump systems for proper LED readout
3. Y1 and Y2 wiring from the 824 must connect to Y1 and Y2 of the indoor unit IFC for proper air flow and LED read out
4. R connection at outdoor unit is required only for two compressor/two stage units

*Caution: Do not run Outdoor/Remote sensor wires in the same bundle with HVAC wires. Also, keep away from high voltage wiring to avoid interference.

Diagram 14 - Package 1 or 2 Stage Heat/Cool w/Variable Speed Blower

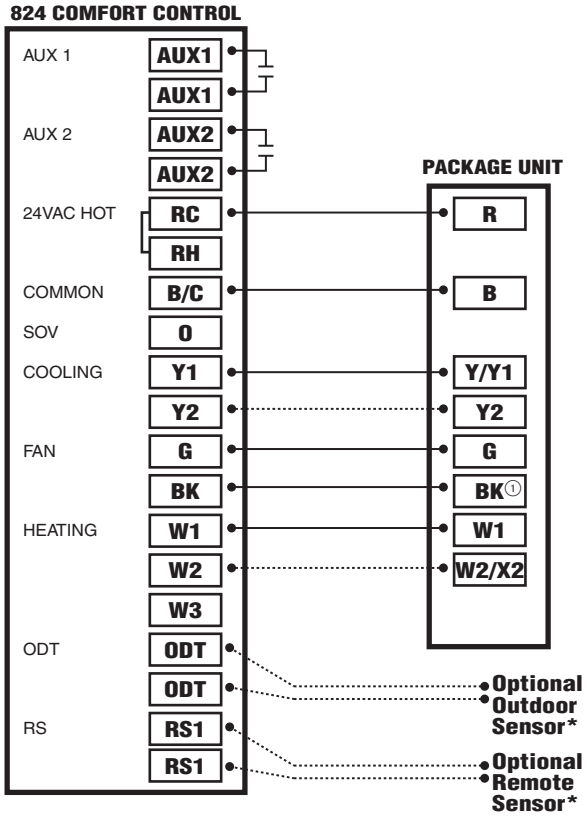

NOTES:

1. Remove "R" to "BK" jumper and clip all "Y" connections at the integrated motor control board (ICMC) to enable pulse width control of the variable speed indoor blower. Ensure clipped wires are capped and taped off.

*Caution: Do not run Outdoor/Remote sensor wires in the same bundle with HVAC wires. Also, keep away from high voltage wiring to avoid interference.

Diagram 15 - Package 1 Stage Heat/Cool w/Non-Variable Speed Blower

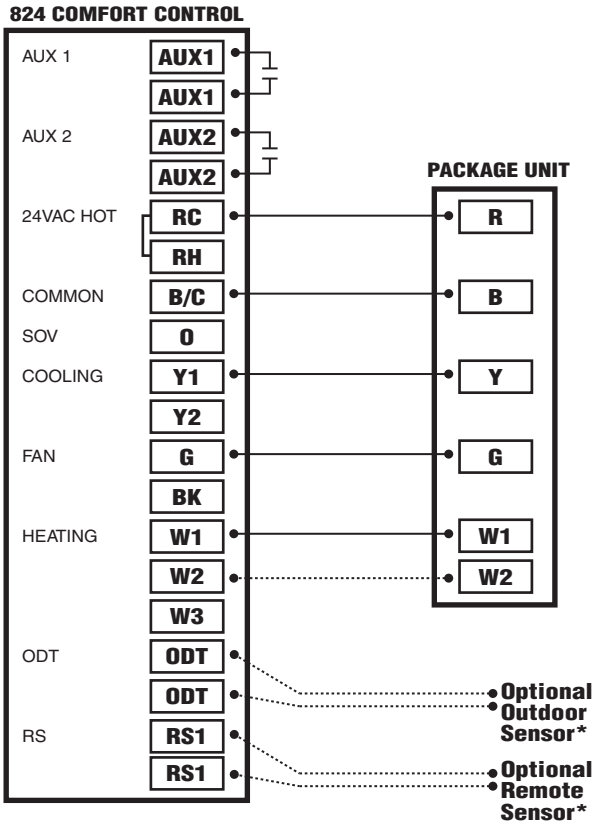

*Caution: Do not run Outdoor/Remote sensor wires in the same bundle with HVAC wires. Also, keep away from high voltage wiring to avoid interference.

Diagram 16 - Ameristar 1 Stage Cooling

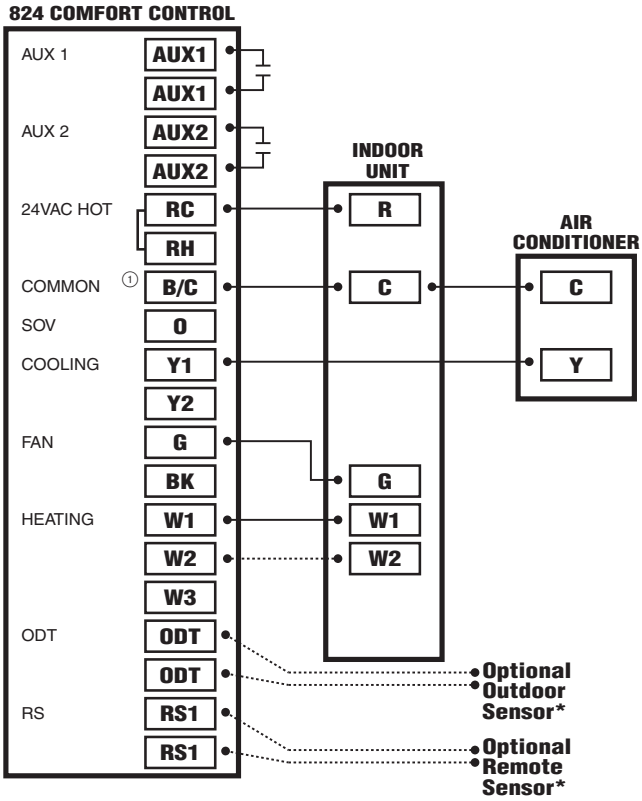

NOTES:
1. B/C at the Control is 24v common and must be connected to C at the Indoor and Outdoor Units

*Caution: Do not run Outdoor/Remote sensor wires in the same bundle with HVAC wires. Also, keep away from high voltage wiring to avoid interference.

4.6 Heat Pump Applications

Diagram 17 - 1 or 2 Stage Heat Pump w/TAM7 Model Air Handler

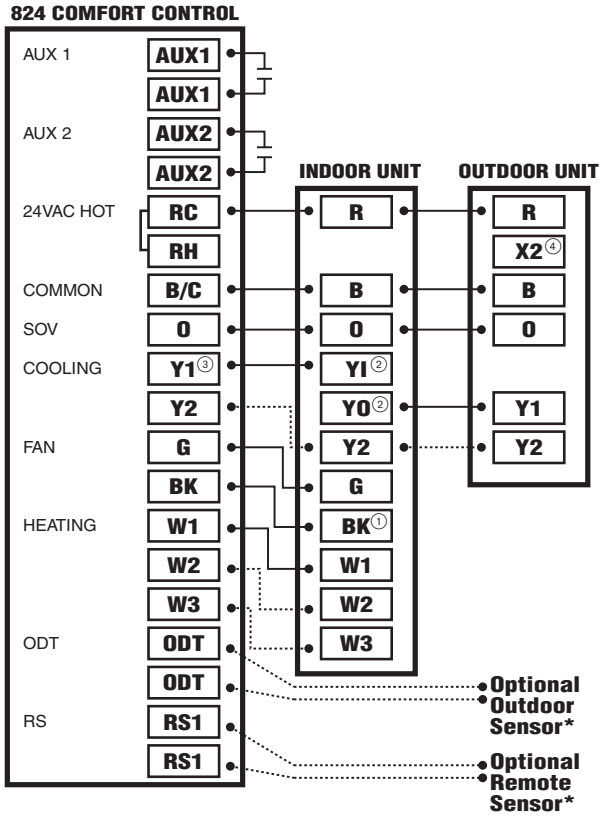

NOTES:

1. Remove the factory installed BK jumper at the indoor unit's AFC Board
2. YI and YO connections must be made as shown for freeze protection and internally mounted condensate overflow circuits to function properly
3. Wire 3rd party condensate overflow switches between Y1 of the 824 and YI of the airflow control board
4. Do not connect X2 when using this control.

*Caution: Do not run Outdoor/Remote sensor wires in the same bundle with HVAC wires. Also, keep away from high voltage wiring to avoid interference.

Diagram 18 - 1 Stage Heat Pump w/GAM5A or TAM4 Model Air Handler

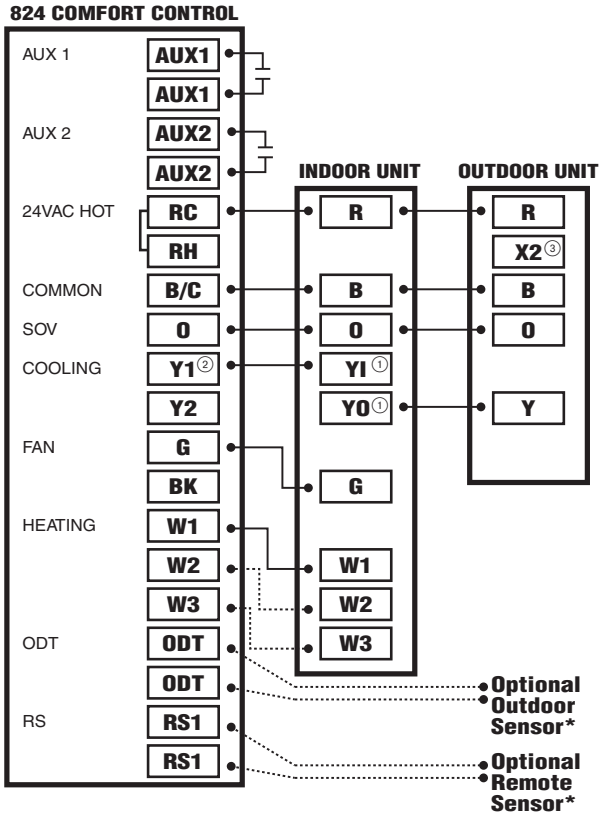

NOTES:

1. YI and YO connections must be made as shown for freeze protection and internally mounted condensate overflow circuits to function properly
2. Wire 3rd party condensate overflow switches beteeen Y1 of the 824 and Y of the air handler
3. Do not connect X2 when using this control.

*Caution: Do not run Outdoor/Remote sensor wires in the same bundle with HVAC wires. Also, keep away from high voltage wiring to avoid interference.

Diagram 19 - 1 Stage Heat Pump w/GAM5B Model Air Handler

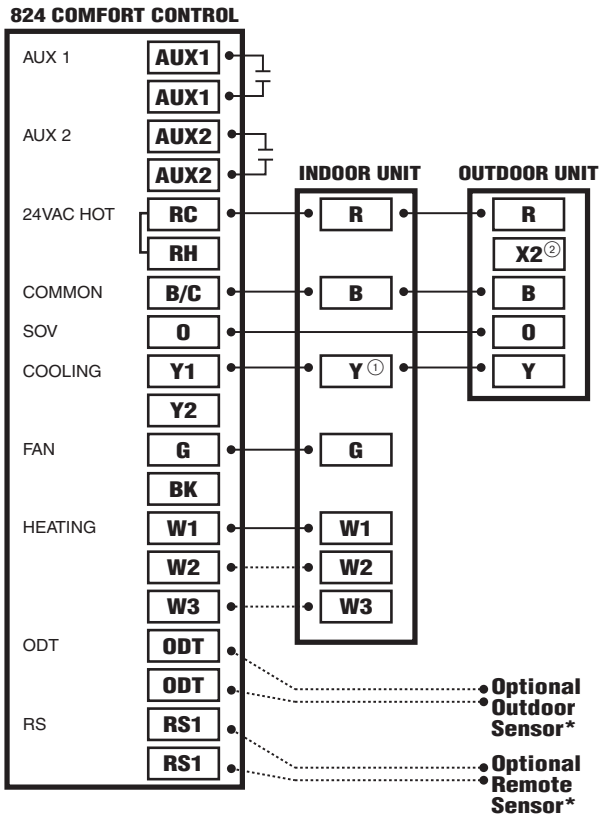

NOTES:

1. Y terminal must be connected at indoor unit for selected compressor air flow
2. Do not connect X2 when using this control.

*Caution: Do not run Outdoor/Remote sensor wires in the same bundle with HVAC wires. Also, keep away from high voltage wiring to avoid interference.

Diagram 20 - 2 Stage Heat Pump w/GAM5B Model Air Handler

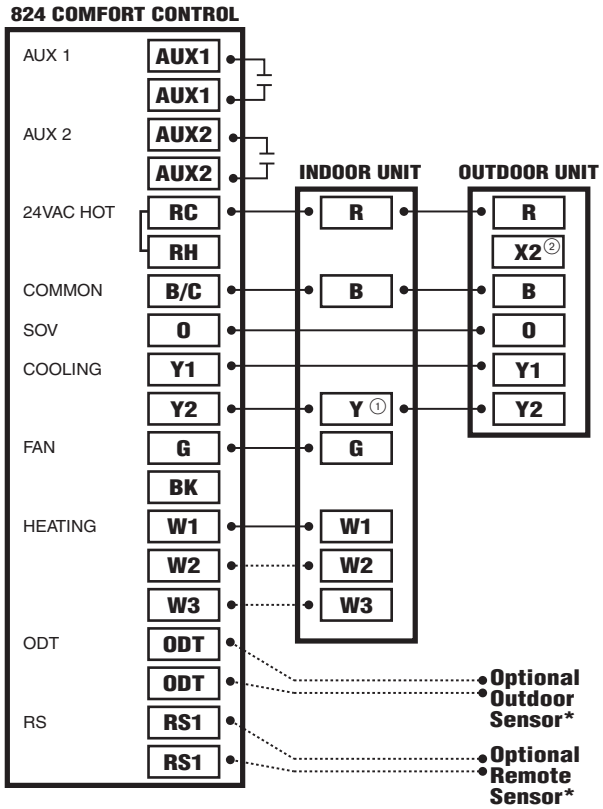

NOTES:

1. Y terminal must be connected at indoor unit for selected compressor air flow
2. Do not connect X2 when using this control.

*Caution: Do not run Outdoor/Remote sensor wires in the same bundle with HVAC wires. Also, keep away from high voltage wiring to avoid interference.

Diagram 21 - 1 Stage Heat Pump w/GAF2-S Model Air Handler

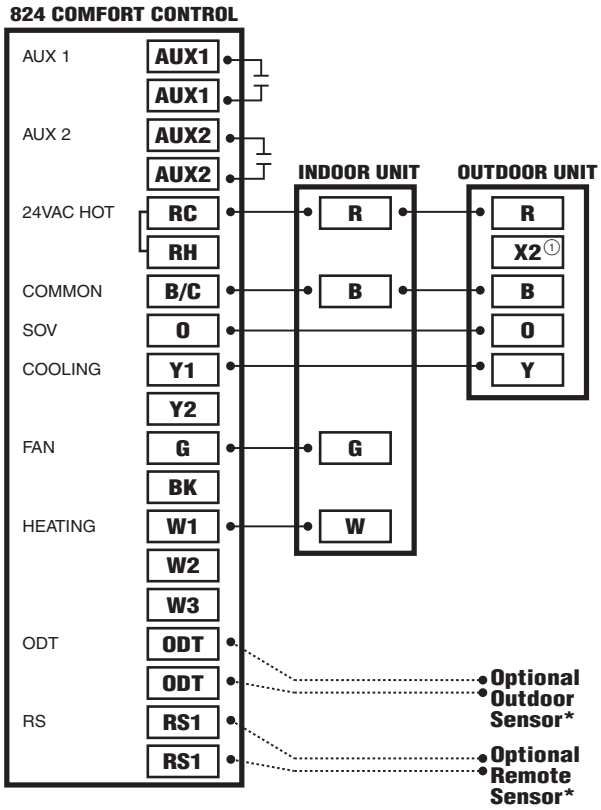

NOTES:

1. Do not connect X2 when using this control.

*Caution: Do not run Outdoor/Remote sensor wires in the same bundle with HVAC wires. Also, keep away from high voltage wiring to avoid interference.

Diagram 22 - 1 Stage Heat Pump w/GAF2-36M Model Air Handler

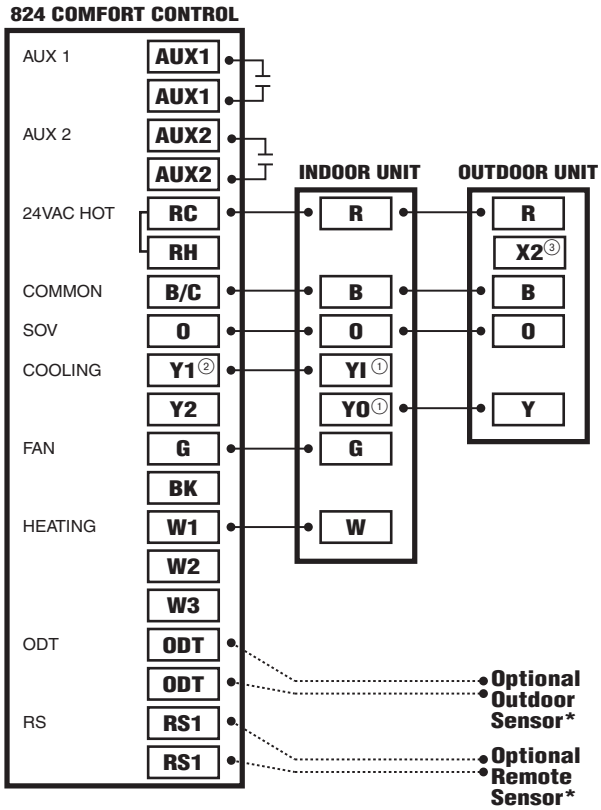

NOTES:

1. YI and YO connections must be made as shown for freeze protection and internally mounted condensate overflow circuits to function properly
2. Wire 3rd party condensate overflow switches beteeen Y1 of the 824 and YI of the air handler
3. Do not connect X2 when using this control.

*Caution: Do not run Outdoor/Remote sensor wires in the same bundle with HVAC wires. Also, keep away from high voltage wiring to avoid interference.

Diagram 23 - 1 Stage Heat Pump w/GAT2 & GAM2 Model Air Handler

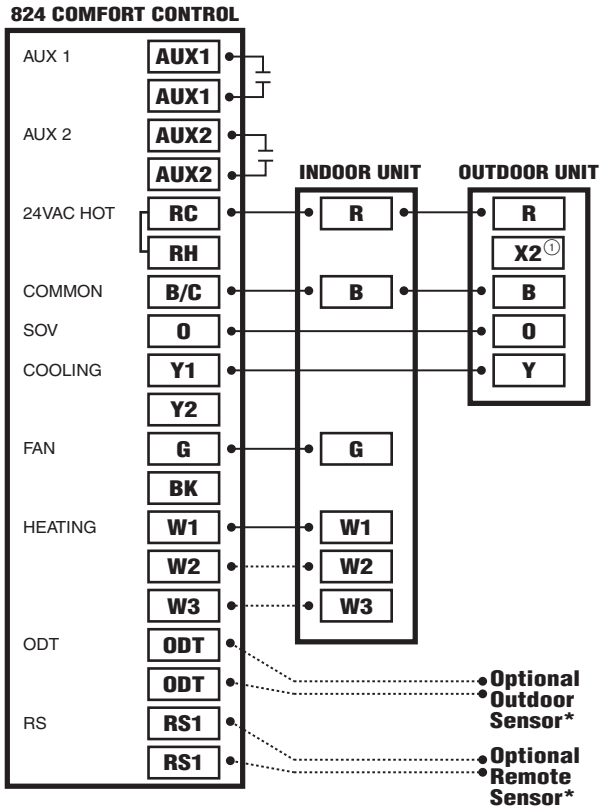

NOTES:

1. Do not connect X2 when using this control.

*Caution: Do not run Outdoor/Remote sensor wires in the same bundle with HVAC wires. Also, keep away from high voltage wiring to avoid interference.

Diagram 24 - 1 Stage Heat Pump w/TEM3 Model Air Handler

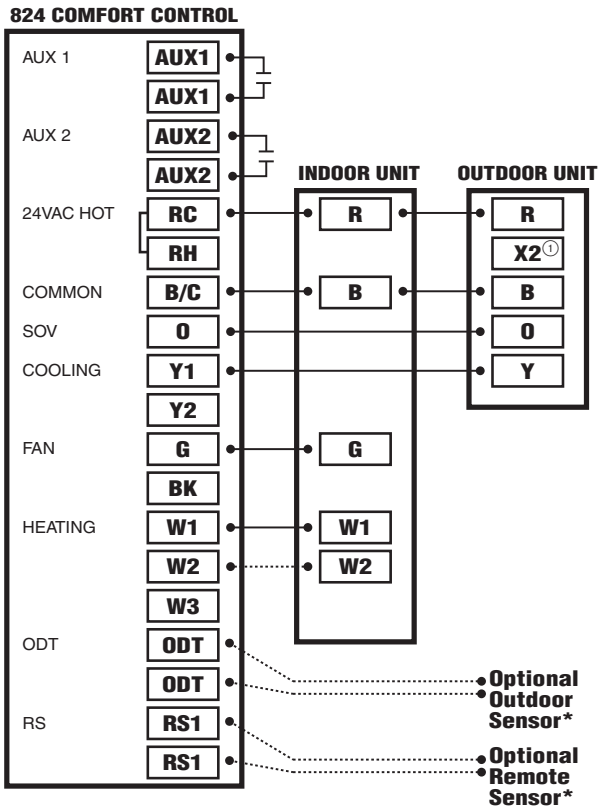

NOTES:

1. Do not connect X2 when using this control.

*Caution: Do not run Outdoor/Remote sensor wires in the same bundle with HVAC wires. Also, keep away from high voltage wiring to avoid interference.

Diagram 25 - 1 Stage Heat Pump w/TEM4 Air Handler

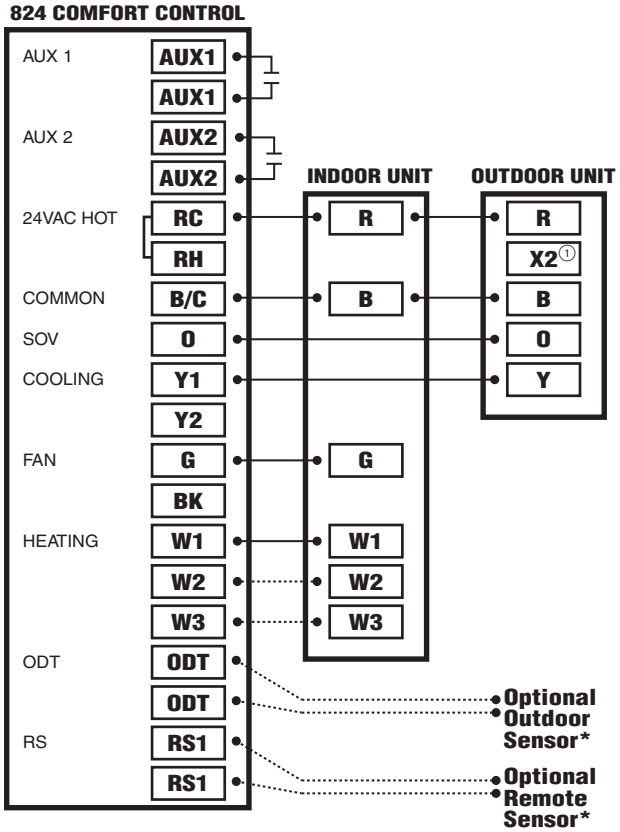

NOTES:

1. Do not connect X2 when using this control.

*Caution: Do not run Outdoor/Remote sensor wires in the same bundle with HVAC wires. Also, keep away from high voltage wiring to avoid interference.

Diagram 26 - 1 or 2 Stage Heat Pump w/TEM6 Variable Speed Air Handler

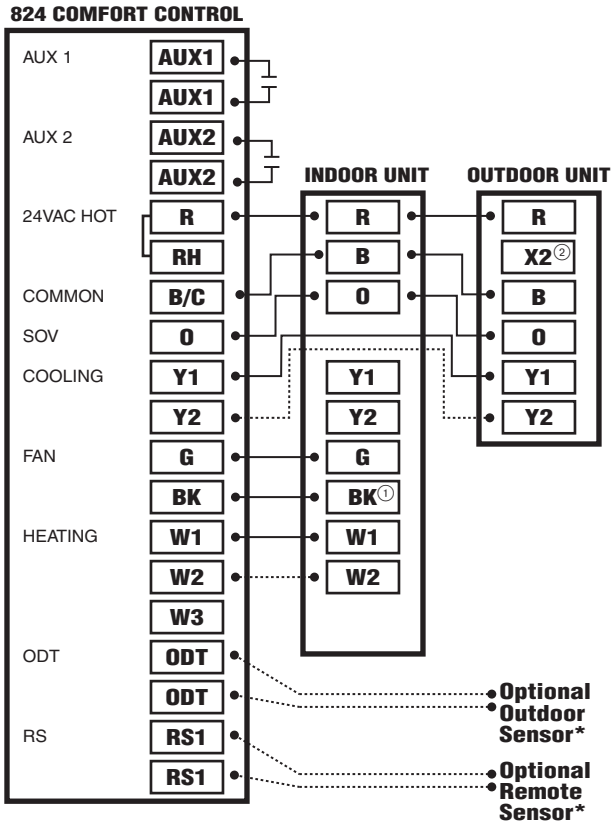

NOTES:

1. Remove the factory installed BK jumper at the indoor unit
2. Do not connect X2 whene using this control.
3. Y2 connection at outdoor is only required for two stage units

*Caution: Do not run Outdoor/Remote sensor wires in the same bundle with HVAC wires. Also, keep away from high voltage wiring to avoid interference.

Diagram 27 - Package 1 or 2 Stage Heat Pump w/Variable Speed Blower

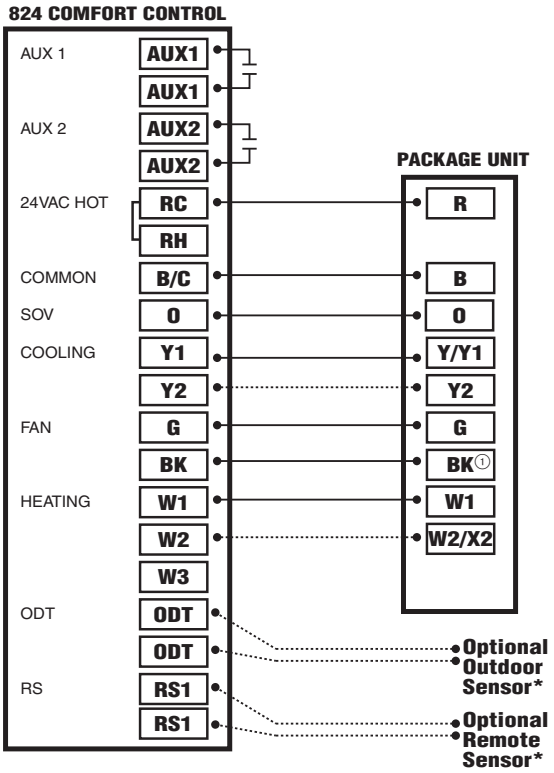

NOTES:

1. Remove "R" to "BK" jumper and clip all "Y" connections at the integrated motor control board (ICMC) to enable pulse width control of the variable speed indoor blower. Ensure clipped wires are capped and taped off.

*Caution: Do not run Outdoor/Remote sensor wires in the same bundle with HVAC wires. Also, keep away from high voltage wiring to avoid interference.

Diagram 28 - Package 1 Stage Heat Pump w/Non-Variable Speed Blower

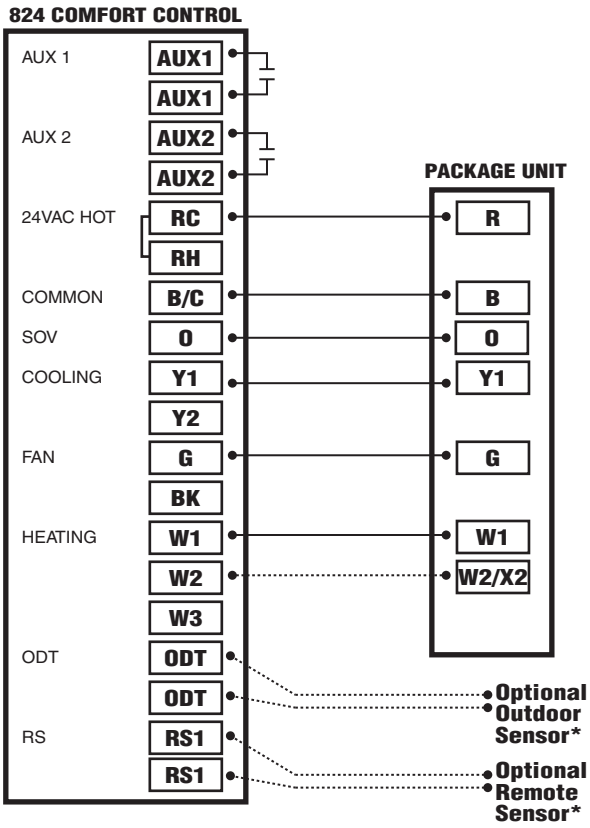

*Caution: Do not run Outdoor/Remote sensor wires in the same bundle with HVAC wires. Also, keep away from high voltage wiring to avoid interference.

Diagram 29 - Ameristar 1 Stage Heat Pump

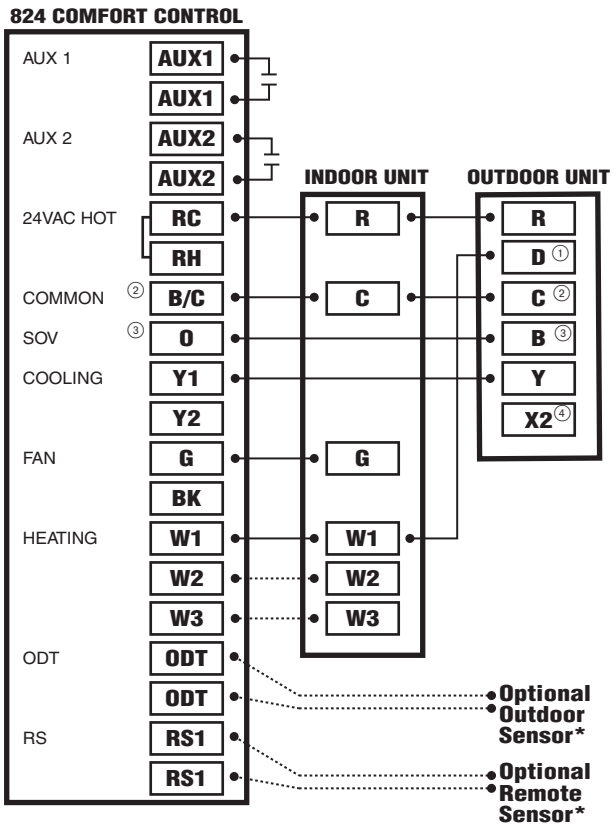

NOTES:

1. D at the Outdoor Unit must be wired to W1 or W2 for electric heat during defrost
2. B/C at the Control is 24v common and must be connected to C at the Indoor and Outdoor Units
3. O at the Control must be connected to B at the Outdoor Unit for SOV operation - SOV must also be configured to be energized in heating mode in the 824 Installer Settings>Standard
4. Do not connect X2 when using this control.

*Caution: Do not run Outdoor/Remote sensor wires in the same bundle with HVAC wires. Also, keep away from high voltage wiring to avoid interference.

4.7 Dual Fuel Applications

Diagram 30 - 1 or 2 Stage Heat Pump w/Variable Speed Gas Furnace

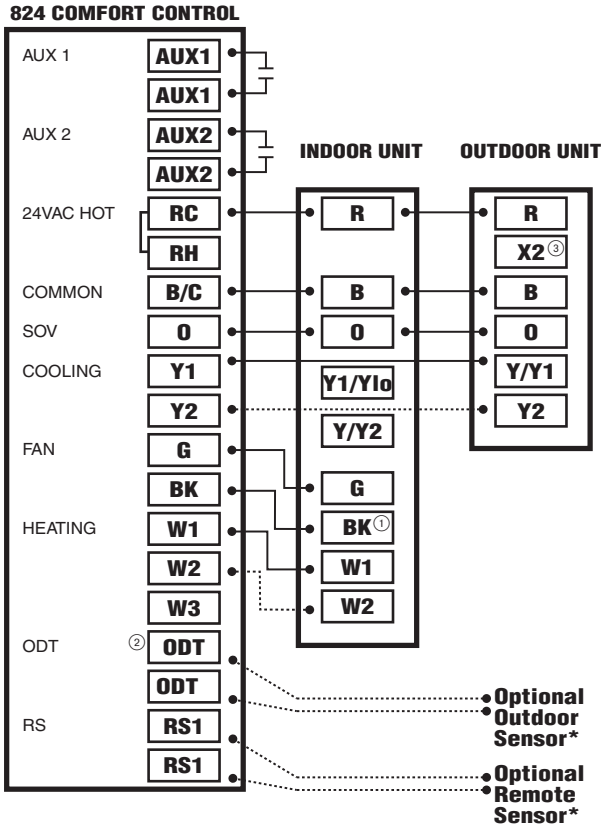

NOTES:

1. Cut and remove the factory installed BK jumper at the indoor unit (some units may require DIP switch settings)
2. For restricted mode operation, a wired ODT sensor must be connected to the 824
3. Connection to X2 is not required for this configuration

*Caution: Do not run Outdoor/Remote sensor wires in the same bundle with HVAC wires. Also, keep away from high voltage wiring to avoid interference.

Diagram 31 - 1 Stage Heat Pump w/Non-Variable Speed Gas Furnace

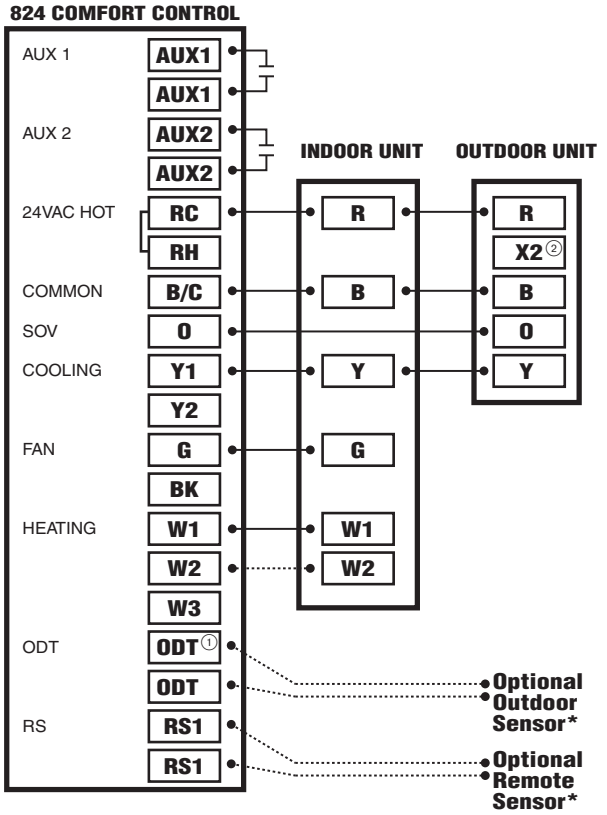

NOTES:

1. For restricted mode operation, a wired ODT sensor must be connected to the 82
2. Connection to X2 is not required for this configuration

*Caution: Do not run Outdoor/Remote sensor wires in the same bundle with HVAC wires. Also, keep away from high voltage wiring to avoid interference.

Diagram 32 - 1 or 2 Stage Heat Pump w/S9V2 Furnace

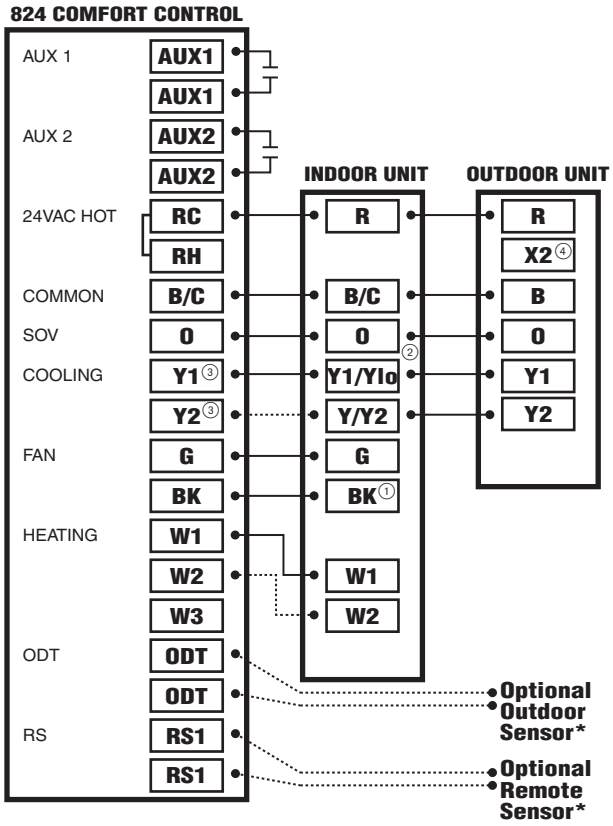

NOTES:

1. Cut and remove the BK jumper at the indoor unit
2. Remove the factory Y1-O jumper on the indoor unit for heat pump systems for proper LED readout
3. Y1 and Y2 wiring from the 824 must connect to Y1 and Y2 of the indoor unit IFC for proper air flow and LED read out
4. Connection to X2 is not required for this configuration

*Caution: Do not run Outdoor/Remote sensor wires in the same bundle with HVAC wires. Also, keep away from high voltage wiring to avoid interference.

Diagram 33 - Package 1 or 2 Stage Dual Fuel w/Variable Speed Blower

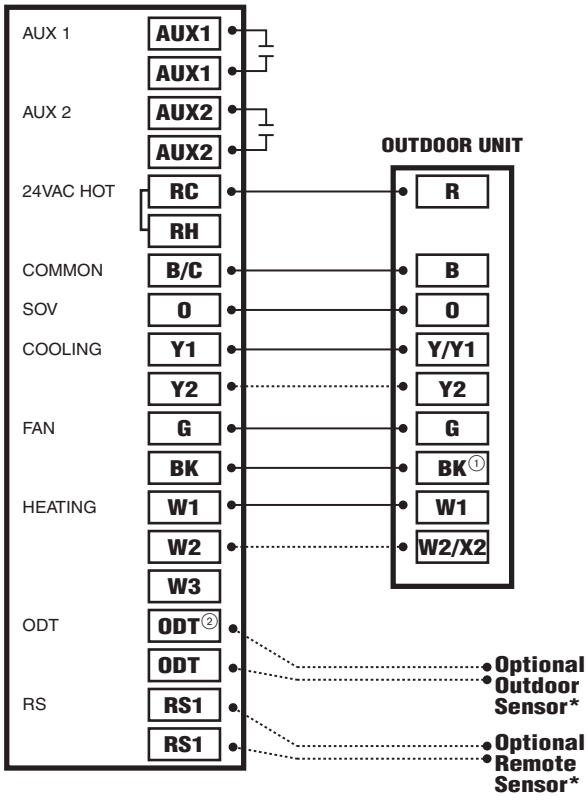

NOTES:

1. Remove “R” to “BK” jumper and clip all “Y” connections at the integrated motor control board (ICMC) to enable pulse width control of the variable speed indoor blower. Ensure clipped wires are capped and taped off.
2. For restricted mode operation, a wired ODT sensor must be connected to the 824.

*Caution: Do not run Outdoor/Remote sensor wires in the same bundle with HVAC wires. Also, keep away from high voltage wiring to avoid interference.

5. System Setup

5.1 Power-Up Sequence

When the 824 Control is connected to the Sub-base, the Control initiates a 90-120 second power-up sequence. During the power-up sequence, the Screen Calibration option is available for five seconds (Screen Calibration is available for five minutes if the screen has never been calibrated and following a Restore Factory Defaults command).

If the screen is not pressed within five minutes, the Control will default to previously stored Screen Calibration settings. The 824 Control is factory calibrated and can be recalibrated at any time by rebooting the Control.

Note: Temperature display may be inaccurate until the 824 Control acclimates to ambient room conditions, which may take up to one hour.

5.2 Guided Setup Wizards

The 824 Control features two Setup Wizards, the Installation Wizard and the User Setup Wizard. The Installation Wizard guides installers through the installation and configuration process, and the User Setup Wizard guides Homeowners through user-configurable settings.

Installation Wizard

The Installation Wizard appears when 1) the 824 Control is powered on for the first time, 2) when the Restore Factory Defaults function is invoked (Home>Menu>Service> Technician Access>Proceed>Restore Factory Defaults), and 3) when it is selected directly (Home>Menu>Service> Technician Access>Proceed>Installation Wizard).

By following the navigational steps and screen prompts, installers are guided through the Time and Date screens, Installer Setup screens (see “5.4 Installer Setup Screens” on page 25 for detailed descriptions of each of the Installer Setup Screens), Reminders screens and the Dealer Code configuration screens. Each of these menus can be individually accessed after completing the Installation Wizard.

User Setup Wizard

The User Setup Wizard is accessed navigating to Home>Menu>Settings>User Setup Wizard. By following the navigational steps and screen prompts, homeowners are guided through the Display, Schedules, Guided Schedule, Network, Nexia and Weather configuration screens. Each of these menus may also be accessed individually. Refer to the User Guide for detailed information on user settings.

5.3 Smart Optimization

The 824 Control is equipped with Smart Optimization. By executing a series of blower and active call on/off tests, Smart Optimization will customize the 824 Control to each unique environment and increase the accuracy of the sensed indoor temperature and overall system performance.

Smart Optimization is enabled by default and will automatically execute approximately 18 hours after initial power up. Smart Optimization takes 90 minutes to complete and during the process, heating and cooling operations are disabled. The screen will indicate that the 824 Control is in Smart Optimization mode.

To delay Smart Optimization for an additional 18 hours, touch the 824 Control Screen and hold for five seconds.

To disable Smart Optimization altogether, navigate to Home>Smart Optimization and select Disable and press Apply.

To enable Smart Optimization, navigate to Home>Smart Optimization and select Enable and press Apply. Smart Optimization will execute in approximately 18 hours.

To manually trigger Smart Optimization, first disable, then re-enable the feature.

INSTALLATION WIZARD MENU ITEMS	DESCRIPTION
Date and Time	Set the current date, time and select whether Daylight Savings Time is on or off.
Installer Setup	Configure the basic equipment components installed and customize how the control operates. See Sections 5.4.1 through 5.4.7 for detailed information on installer setup options.
Service Reminders	Various service reminders can be enabled on the 824 control based on the system configured. Reminder options are System, Filter, Ventilation, UV Light and Humidifier. The frequency of each reminder can be selected based on calendar or run time days.
Dealer Identification Code	The dealer identification code is used to populate the Dealer Contact Information and associate this device with a Nexia Dealer Portal account. Enter the primary phone number of the dealership to activate this feature. Only controls connected to the Internet will auto-populate the dealer information.

5.4 Installer Setup Screens

From the Installer Setup screens, individual parameters are configured and modified. Use the up and down arrows to scroll through the groups of settings. To change a setting contained in a particular group, press Edit and press Next to navigate to the desired setting. Press Save to save changes or Exit to discard changes.

5.4.1 Group 1 Standard Settings

MENU ITEM	OPTIONS [DEFAULT]	DESCRIPTION
Outdoor Unit Type	None, [Cooling Only], Heat Pump	Select the type of outdoor unit installed
Outdoor Unit Stages	[Single Stage], Two Stage	Select the number of outdoor unit stages
Compressor Type	Single Compressor Two Stage, [Two Compressor Two Stage]	Select the compressor type for multi-stage outdoor units
Indoor Unit Type	[Gas/Oil], Electric, Hydronic	Select the type of indoor unit installed
Indoor Heat Stages	[Single Stage], Two Stage, Three Stage	Select the number of indoor heat stages
Indoor Blower Type	Variable, [Non - Variable]	Select the indoor blower type (Constant Torque motors are considered non-variable speed)
SOV Operation	[with Cooling Call], with Heating Call	Select which mode of operation energizes the switch-over valve

5.4.2 Group 2 Equipment Settings

MENU ITEM	OPTIONS [DEFAULT]	DESCRIPTION
Compressor Cooling Cycles Per Hour	2 to 6 Cph [3]	Select the number of cycles per hour during cooling operation
1st Stage Compressor Cooling Cycles Per Hour	2 to 6 Cph [3]	Select the number of cycles per hour during 1st stage cooling operation
2nd Stage Compressor Cooling Cycles Per Hour	2 to 6 Cph [3]	Select the number of cycles per hour during 2nd stage cooling operation
Compressor Heating Cycles Per Hour	2 to 6 Cph [3]	Select the minimum runtime (MRT) of stage 1 indoor heat
1st Stage Compressor Heating Cycles Per Hour	2 to 6 Cph [3]	Select the minimum runtime (MRT) of stage 2 indoor heat
2nd Stage Compressor heating Cycles Per Hour	2 to 6 Cph [5]	Select the minimum off time (MOT) for indoor heat operation
Indoor Heater Cycles Per Hour	2 to 6 Cph [5]	Select the number of cycles per hour during indoor heat operation
1st Stage Indoor Heat Cycles Per Hour	2 to 6 Cph [5]	Select the number of cycles per hour during 1st stage indoor heat operation
2nd Stage Indoor Heat Cycles Per Hour	2 to 6 Cph [5]	Select the number of cycles per hour during 2nd stage indoor heat operation
3rd Stage Indoor Heat Cycles Per Hour	2 to 6 Cph [5]	Select the number of cycles per hour during 3rd stage indoor heat operation

5.4.3 Group 3 Sensor Settings

MENU ITEM	OPTIONS [DEFAULT]	DESCRIPTION
Select Outdoor Temperature Sensor	[No ODT Sensor], Remote ODT Sensor	Select whether an outdoor temperature sensor has been connected
Calibrate Outdoor Temperature Sensor	-5°F to 5°F	Calibrate the outdoor temperature sensor
Select Indoor Temperature Sensor	[Onboard IDT Sensor] Remote IDT Sensor	Select whether the indoor temperature is being sensed by the 824 Control onboard sensor or wired remote sensor
Calibrate Indoor Temperature Sensor	-5°F to 5°F	Calibrate the indoor temperature sensor
Calibrate Onboard Humidity Sensor	-5% - 5%	Calibrate the onboard humidity sensor

5.4.4 Group 4 Accessories Settings

MENU ITEM	OPTIONS [DEFAULT]	DESCRIPTION
Filtration Type Installed	Air Cleaner, [Media Filter]	Select the filter type installed
Humidifier Installed	[None], Yes	Select whether a humidifier is installed
Humidifier - Select Aux Contact	[Aux1], Aux2	Select which set of Aux contacts is controlling the humidifier
Humidifier Type	[Powered/Bypass], Steam	Select what type of humidifier is installed
Humidifier Control	[RH Control], Frost Control	Select how the humidifier will be controlled (Outdoor temperature sensor must be connected and enabled to allow Frost Control to be selectable)
Humidifier Fan Action	[Humidify with active Heat Call], Humidify without active Heat Call	Select when the humidifier is allowed to operate
Airflow During Humidifier Only Mode	35% to [100%]	Select the desired airflow when the humidifier is operating without an active call for heat - requires variable speed blower
UV Light Installed	[None], Yes	Select whether a UV Light is installed
Ventilation Installed	[None], Yes	Select whether ventilation is installed
Ventilation - Select Aux Contact	Aux1, [Aux2]	Select which set of Aux contacts is controlling the ventilation system
Minimum Ventilation Runtime	0 - 60 Minutes [5 Minutes]	Select the minimum runtime per hour for ventilation system
Outdoor Temperature Ventilation Override	[Disable], Enable	Select whether an outdoor temperature override is allowed (Outdoor temperature sensor must be connected and enabled to allow this setting to be selected)
Ventilator Fan Action	[Ventilate with Blower]. Ventilate without Blower	Select whether the indoor blower operates on a call for ventilation
Ventilation - Minimum Outdoor Temperature	*-10°F to 50°F [0°]	Select the minimum outdoor temperature that ventilation is allowed
Ventilation - Maximum Outdoor Temperature	80°F to 110°F [100°F]	Select the maximum outdoor temperature that ventilation is allowed
Accumulate Overridden Runtime	[No], Yes	Select whether the overridden ventilation runtime will be made up
Accumulated Period	[4 hours -recover based on outdoor conditions], 24 hours - recover based on outdoor conditions, 4 hours - recover to maintain minimum ventilation, 24 hours - recover to maintain minimum ventilation	Select when to recover missed ventilation runtime due to outdoor conditions exceeding the minimum/maximum outdoor temperature setting (The first two options will not meet ASHRAE 62.2 Standard for minimum ventilation requirements)
Dehumidifier Installed	[None], Yes	Select whether a dehumidifier is installed
Dehumidifier - Select Aux Contact	Aux1, [Aux2]	Select which set of aux contacts is controlling the ventilation system
Dehumidifier Control Options	[Stand Alone Operation], With Active Call for Cooling Only	Select when the dehumidifier is allowed to operate
Run System Fan with Dehumidifier Request	Yes, [No]	Select if the indoor fan should operate with a call for dehumidifier operation

5.4.5 Group 5 Comfort Settings

MENU ITEM	OPTIONS [DEFAULT]	DESCRIPTION
Enable Dehumidification	[Enable], Disable	Select if enhanced dehumidification features are enabled. See section 7.2 Advanced Operation - Dehumidification for additional information.
Dehumidification Overcooling Limit - Degrees	[0°] to 3°F	Select the maximum amount of overcooling allowed when the indoor humidity exceeds the cooling target humidity setpoint. See section 7.2 Advanced Operation - Dehumidification for additional information.
Smart Continous Fan	Enable, [Disable]	Select to enable or disable Smart Continous Fan
Control Response Rate	[Normal], Fast	Select the response rate of the control. See section 7.1 Advanced Operation - Control Response Rate for additional information.
Aggressive Recovery > 2° Setpoint Change	Enable, [Disable]	Select whether the 10-minute staging inhibit is disabled (heating or cooling mode) with a setpoint change greater than 2°. See section 7.7.1 Advanced Operation - Aggressive Recovery for additional information.
Heating Aggressive Recovery by Outdoor Temperature	Enable, [Disable]	Select whether the 10-minute staging inhibit is disabled during heating mode when the outdoor temperature falls below the selected outdoor temperature (Outdoor temperature sensor must be connected and enabled to allow this setting to be selected)
Heating Aggressive Recovery Setting	0° to 70°F [40°F]	Select the outdoor temperature for Heating Aggressive Recovery
Warm Air Discharge	Enable, [Disable]	When enabled the indoor airflow will be limited to 80% on a call for heat pump heating. This only applies to heat pump heating with no call for aux heat (An indoor unit with a variable speed blower is required)

5.4.6 Group 6 Airflow Settings

MENU ITEM	OPTIONS [DEFAULT]	DESCRIPTION
VS Blower On Delay - Clg	[No Delay], Enhanced Mode, 7.5 Minutes @ 80%, 4 Minutes @ 80%, 1 Minute @ 50%, 30 Seconds	Select the blower on delay for cooling operation Enhanced Mode is a tiered Blower On Delay for variable speed blowers only (1 minute at 50%, 7.5 minutes at 80%, then 100%)
Non VS Blower On Delay - Clg	[No Delay], 15 Seconds 30 Seconds	Select the blower on delay for cooling operation
VS Blower Off Delay - Clg	[No Delay], 1.5 Minutes @ 100%, 45 Seconds @ 100%, 30 Seconds @ 50%, 1.5 Minutes @ 50%, 3 Minutes @ 50%, 30 Seconds @ 35%	Select the blower off delay for cooling operation
Non VS Blower Off Delay - Clg	[No Delay], 30 Seconds, 60 Seconds, 90 Seconds	Select the blower off delay for cooling operation
VS Blower On Delay - Comp Htg	[No Delay], Enhanced Mode, 7.5 Minutes @ 80%, 4 Minutes @ 80%, 1 Minute @ 50%, 30 Seconds	Select the blower on delay for compressor heating operation Enhanced Mode is a tiered Blower On Delay for variable speed blowers only (1 minute at 50%, 7.5 minutes at 80%, then 100%)
Non VS Blower On Delay - Comp Htg	[No Delay], 15 Seconds, 30 Seconds	Select the blower on delay for compressor heating operation
VS Blower Off Delay - Comp Htg	[No Delay], 1.5 Minutes @ 100%, 45 Seconds @ 100%, 30 Seconds % 50%, 1.5 Minutes @ 50%, 3 Minutes @ 50%, 30 Seconds @ 35%	Select the blower off delay for compressor heating operation
Non VS Blower Off Delay - Comp Htg	[No Delay], 30 Seconds, 60 Seconds, 90 Seconds	Select the blower off delay for compressor heating operation
Hydronic Heat Blower On Delay	[No Delay], 30 Seconds, 60 Seconds	Select the blower on delay for hydronic heating operation
Hydronic Heat Blower Off Delay	[No Delay], 30 Seconds, 60 Seconds, 90 Seconds	Select the blower off delay for hydronic heating operation
Compressor Low Stage Air Flow% - Comp Clg	35% to 60% [50%]	Select the 1st stage air flow for a two stage/two compressor unit in cooling mode
Compressor Low Stage Air Flow% - Comp Clg	55% to [80%]	Select the 1st stage air flow for a two stage/ single compressor unit in cooling mode
Compressor Low Stage Air Flow% - Comp Htg	35% to 60% [50%]	Select the 1st stage air flow for a two stage/two compressor unit in heating mode
Compressor Low Stage Air Flow% - Comp Htg	55% to [80%]	Select the 1st stage air flow for a two stage/ single compressor unit in heating mode

5.4.7 Group 7 Lockout Settings

An Outdoor Temperature Sensor must be enabled for Lockout settings to be selectable.

MENU ITEM	OPTIONS [DEFAULT]	DESCRIPTION
Auxiliary Heat Lockout	[Disable], Enable	Enable auxiliary heat lockout (10° minimum separation when enabling auxiliary heat lockout and compressor heat lockout)
Auxiliary Heat Lockout Setting	32°F to 70°F Degrees [45°]	Select an outdoor temperature to prevent auxiliary heat above the selected outdoor temperature
Compressor Lockout	[Disable], Enable	Enable compressor heat lockout (10° minimum separation when enabling auxiliary heat lockout and compressor heat lockout)
Compressor Lockout Setting	5°F to 70°F Degrees [30]	Select an outdoor temperature to prevent compressor heating below the selected outdoor temperature
Defrost Heater Balance Point (W1)	[Disable], Enable	Enable defrost heater balance point for W1, W2 and W3 (only applicable when indoor heat is electric or hydronic)
Defrost Heater Balance Point (W1) Setting	40°F to [55°F]	Select an outdoor temperature to disallow 1st, 2nd and 3rd stage of indoor heat during defrost above this temperature
Defrost Heater Balance Point (W2)	[Disable], Enable	Enable defrost heater balance point for W1 and W2 (only applicable when indoor heat is electric or hydronic)
Defrost Heater Balance Point (W2) Setting	10°F to 50°F [40°F]	Select an outdoor temperature to disallow 2nd and 3rd stage of indoor heat during defrost above this temperature
Defrost Heater Balance Point (W3)	[Disable], Enable	Enable defrost heater balance point for W3 only (only applicable when indoor heat is electric or hydronic)
Defrost Heater Balance Point (W3) Setting	[5°F] to 45°F [25°F]	Select an outdoor temperature to disallow 3rd stage of indoor heat during defrost above this temperature
Compressor Cooling 1st Stage Lockout	[Disable], Enable	Enable compressor cooling 1st stage lockout
Compressor Cooling 1st Stage Lockout Setting	80°F to [120°F]	Select an outdoor temperature to force the system to 2nd stage compressor cooling
Compressor Heating 1st Stage Lockout	[Disable], Enable	Enable compressor heating 1st stage lockout
Compressor Heating 1st Stage Lockout Setting	0°F to [50°F]	Select an outdoor temperature to force the system to 2nd stage compressor heating
Furnace Heating 1st Stage Lockout	[Disable], Enable	Enable furnace heating 1st stage lockout
Furnace Heating 1st Stage Lockout Setting	0°F to [50°F]	Select an outdoor temperature to force the system to 2nd stage furnace heating

5.5 Service Reminders

Reminders can be enabled to trigger an alert when service is required. The reminder is time-based and can be configured on system run time or calendar days. Reminders can be configured for humidifiers, filters, ventilation systems, UV lights and HVAC system maintenance. The type of reminders available are based on the accessories enabled in the installer settings.

5.6 Dealer Code

When an 824 Control is connected to the Internet, a Dealer Code can be entered to auto-populate the dealer's contact information and logo. The code is the dealer's registered phone number listed on ASDealernet. The Dealer Code is also used to associate this device with a specific dealer on the Dealer Diagnostic Portal.

5.7 Software Updates

To take full advantage of the features and benefits of the 824, the Control should have the latest software revision installed.

When the 824 is connected to a Nexia™ Home Intelligence account, software updates will occur automatically and do not require user intervention.

The software may also be manually updated. This procedure requires a computer with an Internet connection, a USB Flash Drive and the included USB connector. From the computer, go to www.AmericanStandardAir.com. From the Products tab, select Thermostat Controls and click on the 824. Scroll down the page and click on Get Software Updates and follow the on-screen prompts.

6. Basic Operation

6.1 PI Control

The 824 Control uses proprietary control schemes to provide comfort and energy efficiency. The Control senses indoor temperature and determines capacity needed based on the following parameters:

- Mode of operation
- Proportional Error - distance from setpoint
- Integral Error - Time away from setpoint

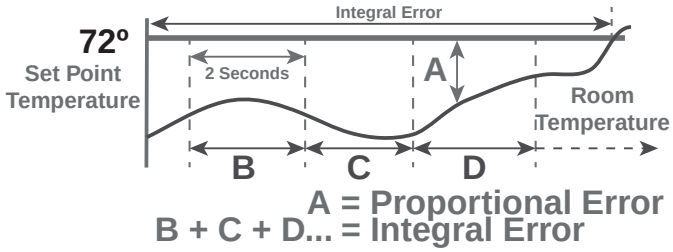

6.2 Load Value - Heating

The 824 Control uses proportional plus integral error to determine the amount of capacity required. The calculated capacity is displayed as load value. Load Value is a numerical representation of the needed capacity to maintain setpoint. The load value range is dependent on the applied system.

0-100	Single Stage Heat Pump Only
0-200	Two State Heat Pump Only
0-200	Single Stage Heat Pump + 1 Stage Electric/Wet Heat
0-300	Single Stage Heat Pump + 2 Stage Electric/Wet Heat
0-400	Single Stage Heat Pump + 3 Stage Electric/Wet Heat
0-300	Two Stage Heat Pump + 1 Stage Electric/Wet Heat
0-400	Two Stage Heat Pump + 2 Stage Electric/Wet Heat
0-500	Two Stage Heat Pump + 3 Stage Electric/Wet Heat
0-100	Single Stage Indoor Heat Only
0-200	Two Stage Indoor Heat Only
0-300	Three Stage Indoor Heat Only
0-175	Single Stage Heat Pump + 1 Stage Gas/Oil Heat
0-275	Single Stage Heat Pump + 2 Stage Gas/Oil Heat
0-375	Single Stage Heat Pump + 2 Stage Gas/Oil Heat
0-275	Two Stage Heat Pump + 1 Stage Gas/Oil Heat
0-375	Two Stage Heat Pump + 2 Stage Gas/Oil Heat
0-475	Two Stage Heat Pump + 3 Stage Gas/Oil Heat

6.3 Load Value - Cooling

0-100 Single Stage Compressor

0-200 Two-Stage Compressor

A Load Value of 50 represents a request of 50% demand for single stage cooling units (“Y”) or 50% demand for stage one of multistage cooling units (“Y1”).

A Load Value of 150 represents a request of 100% demand for stage one (“Y1”) and 50% demand of stage two (“Y2”) for multistage cooling units.

6.4 Duty Cycles

Indoor temperature control is achieved by duty cycling the equipment when the load value is less than 100% of the current stage of operation. The duty cycle rate is dependent on the calculated load value.

The duty cycle chart below indicates the number of cycles at 50% load (i.e. LV = 50).

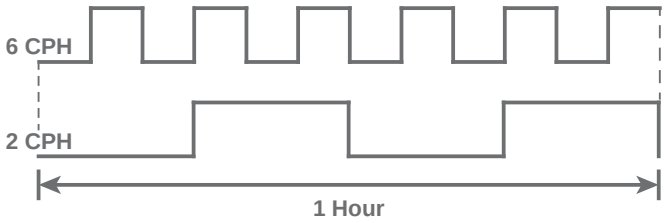

As with all PI-based controls the indoor temperature will fluctuate above and below the user selected setpoint to maintain comfort in the space. Adjusting the factory set CPH (Cycles per Hour) can affect how tight the Control operates around the setpoint. The CPH can be adjusted in the Installer Setup>Equipment Settings (2 – 6 CPH)

- Factory default for compressor operation is 3 CPH
- Factory default for indoor heat is 5 CPH

Effects of changing the cycle rates

Lower CPH results in longer run cycles with less cycling but the indoor temperature may deviate above and below setpoint.

Higher CPH results in tighter indoor temperature control but shorter, more frequent cycles.

6.5 Overshoot Clamp

The 824 Control will enforce an “off cycle” anytime the control overshoots more than 2.5°F. Once the indoor temperature is within 0.75°F of setpoint an “on cycle” is allowed dependent on load value and minimum off times.

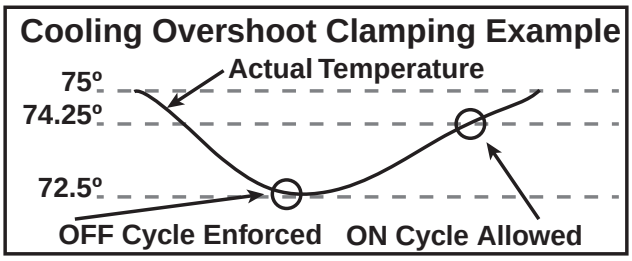

6.6 Stage Thresholds

The threshold to allow operation is a Load Value greater than 5 and operation is always terminated with a Load Value less than 1.

Load Value also determines when additional stages of operation are requested. To prevent rapid cycling between stages, a stage threshold is enforced. The stage threshold is dependent on the applied system.

COMPRESSOR STAGING THRESHOLDS

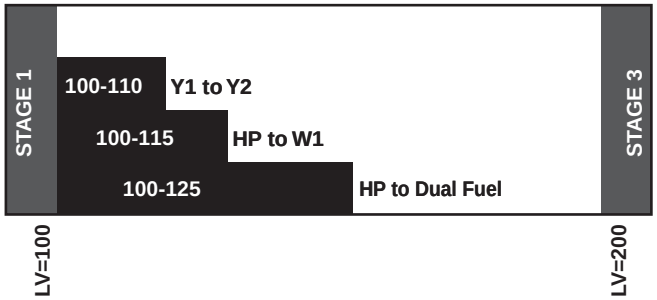

AUX ELECTRIC HEAT - STAGING THRESHOLDS

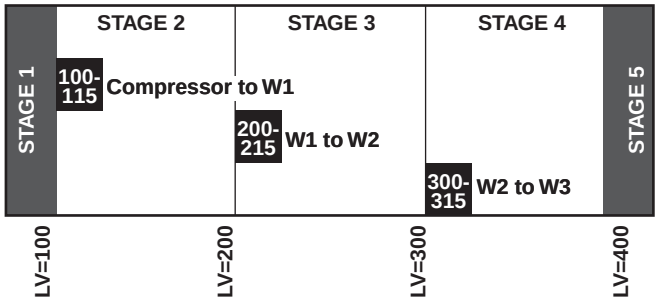

AUX FOSSIL HEAT - STAGING THRESHOLDS

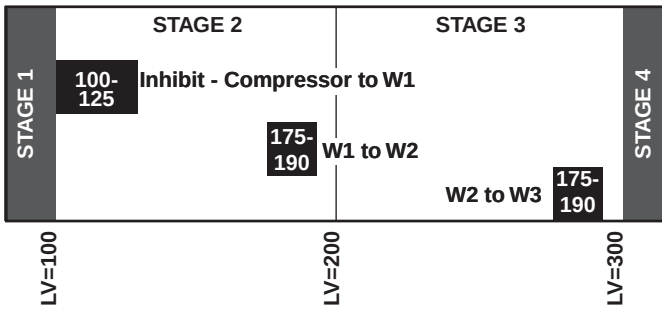

AUX WET HEAT - STAGING THRESHOLDS

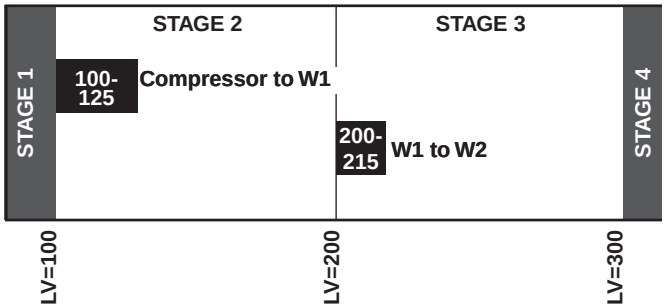

6.7 Stage Inhibits

When the stage threshold is exceeded, a stage inhibit is applied. The stage inhibit calculates the rate of recovery over a 15-minute period and determines if the next stage is required to meet the current demand. If the rate of recovery is great enough, a new 15-minute inhibit is enabled. The Control will not go to the next stage of operation until it determines that the current stage cannot satisfy the current demand. Stage inhibits only apply between compressor stages and compressor heat to indoor heat. Stage inhibits do not apply to indoor heat stages.

Stage inhibits can be disabled in the 824 Control Installer Setup>Comfort Settings.

Stage Inhibits - Compressor Staging

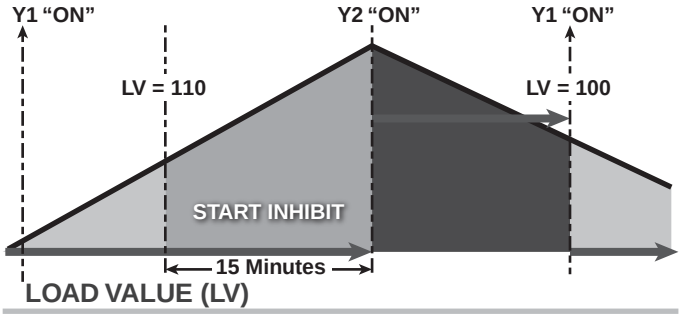

Stage Inhibits - Compressor to Aux Heat

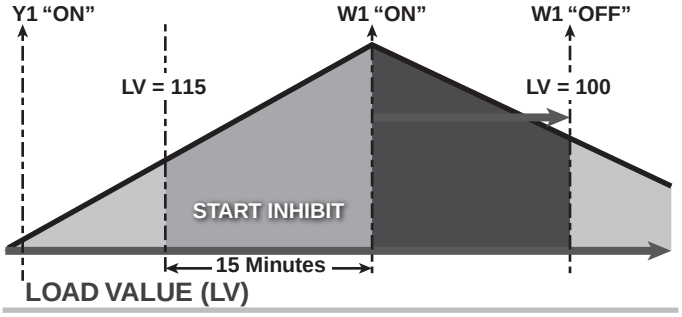

Stage Inhibits - Duel Fuel

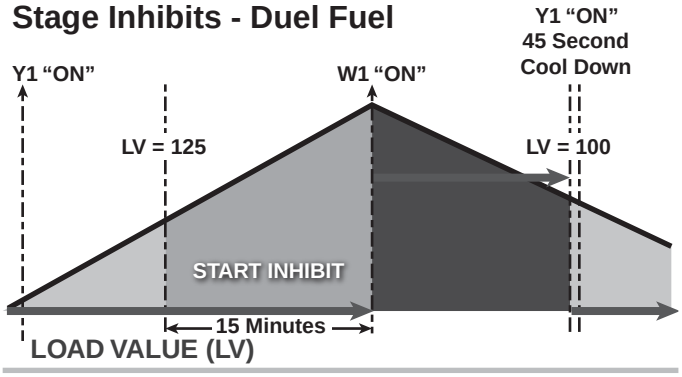

System Mode

The 824 has (5) System Modes which can be selected… Heating, Cooling, Off, Emergency Heat and Auto.

- Heating – System will only operate in heating mode
- Cooling – System will only operate in the cooling mode
- Off – System will not operate in heating or cooling mode
- Emergency Heating – System will operate the indoor heat source only (this is only available when the outdoor unit type is a heat pump)
- Auto - The Control will determine which mode of operation based on the following rules:
  - Heating - Indoor temperature is equal or less than heating setpoint
  - Cooling – Indoor temperature is equal to or greater than cooling setpoint or within 1°F of cooling setpoint

There is minimum deadband between heating and cooling setpoints of 3°F

6.8 Fan Mode

The 824 has three Fan Modes:

- Auto – Fan only runs with a call for heating or cooling
- On – Fan runs continuous
- Circ – Fan runs a user selected minimum amount of time each hour

6.9 Air Cleaner Mode

The 824 has three Air Cleaner modes:

- Auto – Air cleaner operates only with a call for fan operation
- Quick – Air cleaner will operate for 3-hours
- Allergy – Air cleaner will operate for 24-hours

7. Advanced Operation

7.1 Control Response Rate

Allows the user to select a set of higher proportional-integral control constants to increase the responsiveness of the Control. Selecting “Fast” will cause the Control to generate load value at a faster rate. Control Response rate can be adjusted in Installer Setup>Comfort Settings.

7.2 Dehumidification

The 824 utilizes the following methods for dehumidification:

- Air flow reduction (applies only to variable speed blowers) – If BK is connected, the 824 can reduce the system air flow by 30% anytime the indoor RH is higher than the cooling RH target. Air flow reduction is disallowed if the indoor temperature is more than 2°F above the cooling setpoint. Dehumidification is factory enabled in the Installer Setup>Comfort Settings.

  All “Fan Off” delays are also defeated when dehumidification is enabled and the indoor RH exceeds the cooling RH target.

- Overcooling (applies to variable speed and non-variable speed blowers) - If overcooling is enabled, the Control will allow a 0.1°F of overcooling for each 1% of RH error. A maximum amount of overcooling can be configured for 1°, 2° or 3°F.

EXAMPLE OF OVERCOOLING WITH MAXIMUM CONFIGURED AT 2°			
TARGET HUMIDITY	ACTUAL HUMIDITY	PERCENT OF RH ERROR	DEGREES OF OVERSHOOT
40%	45%	5%	0.5° Overshoot
40%	55%	15%	1.5° Overshoot
40%	65%	25%	2.0° Overshoot
40%	70%	30%	2.0° Overshoot

  When the system is actively overcooling, Dehumidification will be displayed on the 824 home screen. The maximum amount of overcooling is configured in Installer Setup>Comfort settings.

- Smart Continuous Fan (applies to variable speed and non-variable speed blowers) – If enabled, continuous fan operation will be interrupted when indoor RH exceeds desired cooling RH target. A humidity icon will be displayed along with the fan icon to indicate that continuous fan operation has been disabled due to high humidity conditions. Smart Continuous Fan will also interrupt the fan circulate mode when indoor humidity exceeds the desired cooling RH. This feature can be enabled in the Installer Settings>Comfort Settings>Smart Continuous Fan settings.

7.3 Dehumidifier Operation

The 824 has the ability to control a Whole-House Dehumidifier through the normally open dry AUX contacts on the 824 Control Sub-base. Control options are:

- Stand Alone Operation – Dehumidifier can operate independent from cooling operation as long as the 824 Control is in Cooling mode or Auto mode and the last call was cooling.

  If Stand Alone Operation is selected, the 824 Control allows the user to select whether the indoor fan operates with dehumidifier request.

- With Active Call for Cooling Only – Dehumidifier can only operate during an active call for cooling.

All dehumidifier control options are located in the Installer Setup>Accessories Settings.

7.4 Dual Fuel Operation

The 824 can control a dual fuel system without the need of an external dual fuel kit. An Outdoor Temperature Sensor must be installed and enabled for Restricted Modes to be available. The 824 Control options are:

- Non Restricted Mode – The Control will determine which mode of heat will operate to maintain comfort based on the calculated system load value. With a load value in compressor heating range the heat pump will operate and if the load value climbs to auxiliary heat range, the heat pump will cycle off and the auxiliary heat source will cycle on. Once the load value falls below the auxiliary heat range, the auxiliary heat will cycle off, and the heat pump will cycle back on.

- Restricted Mode (compressor heat only) – Once enabled an outdoor temperature lockout can be set to disable compressor heating operation. When the outdoor temperature falls below the compressor heat lockout the system will operate on auxiliary heat source only. At any temperature above the compressor heat lockout the system will operate the same as non-restricted mode, heat pump or auxiliary heat would be allowed based on system load value. Once the compressor heat is locked out, the outdoor temperature must rise at least 4° above the compressor heat lockout setting before allowing compressor heat again.

Restrict Compressor Heat Only

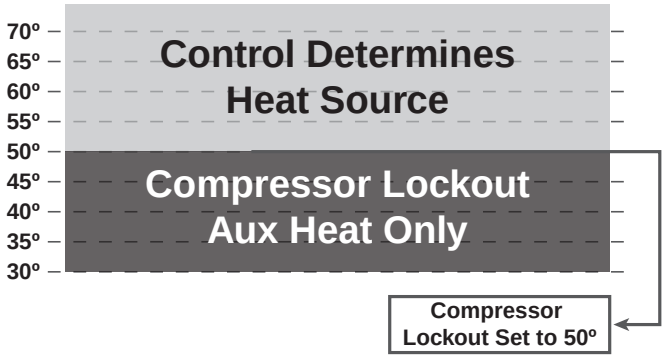

- Restricted Mode (compressor and auxiliary heat) – Once enabled an outdoor temperature lockout can be set to disable compressor heating below and disallow auxiliary heat operation above. When the outdoor temperature is above the auxiliary heat lockout, only compressor heat is allowed. When the outdoor temperature falls below the compressor heat lockout, only auxiliary heat is allowed. When the outdoor temperature is between the compressor heat lockout and auxiliary heat lockout the system will operate the same as non-restricted mode, heat pump or auxiliary heat is allowed based on system load value. There is a 10° minimum dead band between the compressor heat lockout and auxiliary heat lockout. Once the compressor heat or auxiliary heat is locked out, the outdoor temperature must rise or fall at least 4° above or below the lockout setting before allowing compressor or auxiliary heat again.

Restrict Compressor and Aux Heat

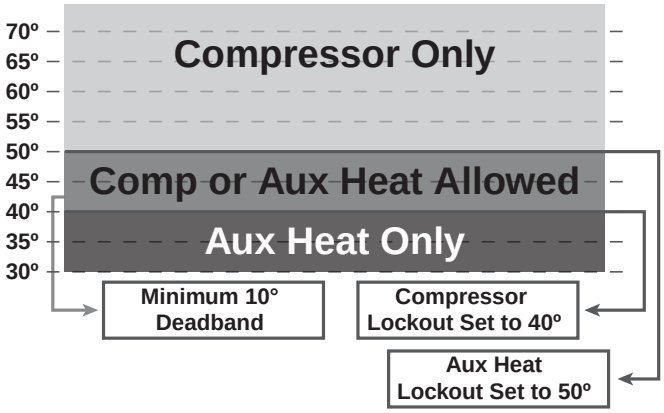

AN OUTDOOR TEMPERATURE SENSOR MUST BE ENABLED FOR LOCKOUT SETTINGS TO BE AVAILABLE. Lockout options are located in the Installer Setup>Lockout Settings.

7.5 Lockouts

The 824 has the following lockouts. **AN OUTDOOR TEMPERATURE SENSOR MUST BE ENABLED FOR LOCKOUT SETTINGS TO BE AVAILABLE.** Lockouts can be enabled in Installer Setup>Lockout Settings.

- Auxiliary Heat Lockout – Once enabled, select an outdoor temperature which disables auxiliary heat anytime the outdoor temperature is above the selected temperature. Compressor heat will be allowed.
- Compressor Lockout - Once enabled, select an outdoor temperature which disables compressor heat anytime the outdoor temperature is below the selected temperature. Indoor heat will be allowed.

  NOTE: If enabling Auxiliary Heat Lockout and Compressor Heat Lockout there is a minimum 10° dead band between the two settings.
- Defrost Heater Balance Point (W1) – Once enabled, select an outdoor temperature which disables all electric heat during defrost above the selected temperature.
- Defrost Heater Balance Point (W2) – Once enabled, select an outdoor temperature which disables 2nd and 3rd stages of electric heat during defrost above the selected temperature.
- Defrost Heater Balance Point (W3) – Once enabled, select an outdoor temperature which disables 3rd stage of electric heat during defrost above the selected temperature.
- Compressor Cooling 1st Stage Lockout – Once enabled, select an outdoor temperature which forces 2nd stage cooling operation.
- Compressor Heating 1st Stage Lockout – Once enabled, select an outdoor temperature which forces 2nd stage compressor heating operation.

- Furnace Heating 1st Stage Lockout – Once enabled, select an outdoor temperature which forces 2nd stage furnace heating operation.

7.6 Humidifier Operation

The 824 has the ability to control a humidifier through the normally open dry AUX Contacts on the Control Sub-base. Humidification is only enabled while in heating mode of operation. Control options are:

- RH Control – Dry contacts are closed anytime the indoor humidity is less than the heating target relative humidity.
- Frost Control – The 824 Control references the outdoor temperature and structure integrity to offset the heating target relative humidity. This helps to limit the risk of frost or condensation from forming on interior walls and windows. A scale of 1 to 10 is provided based on the insulation properties and expected leakage of the home (1=Leaky with poor insulation, 10=Very Tight with good insulation). An outdoor temperature sensor must be connected and enabled for frost control to be available.

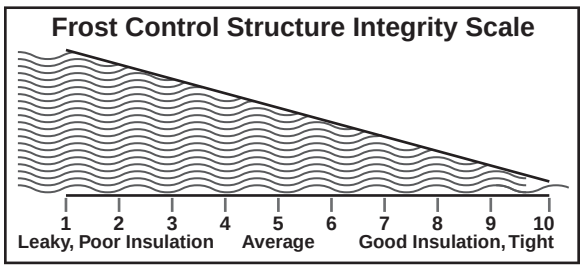

The 824 Control can be setup to allow humidification anytime in heating mode or only when actively heating. The airflow during Humidifier-only is factory set to 100% but can be adjusted between 35%-100% (this requires a variable speed indoor blower with BK connected). All humidifier control options are located in the Installer Setup>Accessories Settings.

7.7 Recovery

The 824 control utilizes a Stage Inhibit to limit equipment staging. This inhibit can be defeated in the following two manners.

7.7.1 Aggressive Recovery

Disables stage inhibits in heating and cooling mode anytime the setpoint is adjusted more than 2°F

7.7.2 Heating Aggressive Recovery

Disable stage inhibit in heating mode only when the outdoor temperature falls below the selected outdoor temperature

7.8 Ventilation Operation

The 824 has the ability to control a Ventilation system through the normally open dry AUX Contacts on the 824 Control Sub-base. The blower is not interlocked on a call for ventilation. The ventilation run time per hour can be adjusted to meet ASHRAE 62.2 standards. A temperature override can be set to prevent ventilation operation when the outdoor temperature exceeds the minimum or maximum outdoor temperature selections. If outdoor temperature overrides are enabled the user can select to accumulate the missed ventilation run time. Options are below:

- Accumulate missed ventilation run time in 4 hour increments and make up when the outdoor temperature is within the min/max settings.
- Accumulate missed ventilation run time in 24 hour increments and make up when the outdoor temperature is within the min/max settings
- Accumulate missed ventilation run time in 4 hour increments and make up at the end of 4 hour period.
- Accumulate missed ventilation run time in 24 hour increments and make up at the end of 24 hour period.

All Ventilation control options are located in the Installer Setup>Accessories Settings.

7.9 Warm Air Discharge

Enabling Warm Air Discharge with BK connected will reduce the variable speed blower air flow by 20% when in compressor heating operation. Warm Air Discharge only applies to compressor heating and is disabled when hydronic, fossil fuel or electric heat (including supplemental heat) modes are activated. Warm Air Discharge can be enabled in Installer Setup>Comfort Settings.

7.10 Wet Heat (Hydronic) Operation

A hot water coil can be applied to either a variable speed or non-variable speed indoor unit. The hot water coil can be the sole source of heat or used as auxiliary heat when applied with a heat pump. When applied with a heat pump, wet heat is considered auxiliary heat and will operate in-conjunction with heat pump heat. Switching the system mode to emergency heat would disable the heat pump and cycle the wet heat only.

If applied with a variable speed air handler with BK connected, the blower speed during wet heat only heating will vary based on the system load value. The airflow will range from 35% to 100% depending on the system load value. When applied with a heat pump, the blower speed during heat pump and wet heat operation will be the higher of the two air flows. There are separate blower “On” and “Off” delays for wet heat in the 824 Control.

The 824 Control is designed to operate forced air systems and should not be applied to non-forced air systems (radiant floors, radiators, etc…)

The hydronic heat blower delay options can be accessed by navigating to Installer > Setup > Airflow Settings.

8. Diagnostic Tools

8.1 Test Modes

Access Test Modes by navigating to Service Menu>Test Modes. All test modes will terminate automatically after 60 minutes or can be terminated manually at any time.

MODE	SETTINGS	DESCRIPTION
Test Blower	50%, 100%	Energize indoor blower at the selected speed
Test Cool	Stage 1 Stage 2	Energize the selected stage of cooling operation. The indoor blower will also operate at the speed required for the selected stage
Test Compressor Heat	Stage 1 Stage 2	Energize the selected stage of compressor heating operation. The indoor blower will also operate at the speed required for the selected stage
Test Indoor Heat	Stage 1 Stage 2 Stage 3	Energize the selected stage of indoor heating operation. The blower operation will be dependent on the indoor heat type: Electric - blower energized during test mode but the blower speed is controlled by the indoor unit Fossil - blower is controlled independently by the indoor unit during test mode Hydronic - blower is energized during test mode
Test Compressor and Indoor Heat	Stage 1 Indoor Heat Stage 2 Indoor Heat Stage 3 Indoor Heat	Energize all stages of compressor heat and selected stage of indoor electric heat/hydronic heat. The blower is energized and runs at the higher of the compressor heat air flow versus indoor heat air flow
More	AUX 1 AUX 2	Closes the normally open AUX contacts. The blower is not energized during this test mode

8.2 Save Logs

The 824 Control has the ability to log data on USB Flash Drive. Attach a USB Flash Drive to the included USB connector, plug it into the 824 Control and select Save Logs from the Service Menu.

The amount of data logged will be dependent on the number of days logged and the storage capability of the USB Flash Drive. Access Save Logs by navigating to Service Menu>Save Logs.

8.3 Diagnostics

Within the Diagnostic screen are two items related to alerts:

- Current Alerts – Alerts which are currently active
- Alert History – Cleared Alerts (last 30 days)

NOTE: Each alert will have a date/timestamp of when the alert was negated. The Date/Time stamp for Current Alerts is when the alert was asserted. For Alert History the date/timestamp is when the alert was negated.

From both screens the user can select an alert code and get additional information on the alert as well as a list of possible causes, similar to the Interactive Troubleshooting Guide located on ComfortSite/ASDealernet

All alerts are categorized by severity:

- **CRITICAL**
  - Loss of heating/cooling operation
  - Service call is required
  - Alert messages are displayed on the home screen and when closed, a flashing red icon is used to indicate alert condition.
- **MAJOR**
  - Reduced functionality - minimum operation is possible
  - Service call is not immediately required
  - Alert messages are not displayed on the home screen but a yellow icon is used to indicate alert condition.

NOTE: Critical and Major alerts can be displayed on the home screen by pressing the alert icon on the shortcut tool bar (top right of home screen).

- **NORMAL**
  - Functionality may be lost but should recover or the information is for diagnostic purposes / performance monitoring
  - Service call is not required
  - Normal alerts are only displayed in the Diagnostic screen

Diagnostics can be accessed by navigating to Service Menu>Diagnostics.

8.4 History

History is accessed by navigating to Service Menu>History

The History screen allows the technician to view cycle count and run time data for each mode and stage of operation. This data provides a snap-shot into system operations.

	TODAY	LAST 7 DAYS	CURRENT MONTH	LAST MONTH
Y1 COOLING	0[1]/0[2]	0[1]/0[2]	0[1]/0[2]	0[1]/0[2]
Y2 COOLING				
Y1 HEATING				
Y2 HEATING				
W1				
W2				
W3				
DEFROST CYCLES				

[1] Indicates cycle count
[2] Indicates cycle time in minutes

8.5 System Report

The System Report Screen provides technicians with important system operational data in one, concise screen. The data is provided in real-time and updates as the data changes.

The System Report Screen displays the following data points:

- System Status - mode and stage of operation
- Load Value
- Fan Status
- Indoor Temperature
- Indoor Relative Humidity
- Heating and Cooling Setpoints
- Relative Humidity Setpoints
- Dehumidifier Status
- Outdoor Temperature
- Outdoor Relative Humidity (Nexia™ connection required)

Currently Energized Terminals are displayed in green at the bottom of the System Report screen.

8.6 Restore Factory Defaults

This feature will delete all saved settings, both user and installer, and restore the 824 to its factory default settings. This also includes any Wi-Fi and Z-Wave device settings.

9. Troubleshooting

SYMPTOM	POSSIBLE CAUSES	ACTION
Control displays an alert code on the screen.	A critical or major alert is present.	Navigate to the Diagnostic screen on the 824 Control for a Problem Description and Possible Cause.
Display will not come on	Loss of 24VAC between R & B at the Control.	1) Check R & B wiring. 2) Check transformer for 24VAC output. 3) Check for broken or shorted thermostat wire.
Indoor temperature display is incorrect.	1) Indoor temperature display needs calibration. 2) Heat from touch screen is being trapped within the thermostat body. See section 4.1 for mounting location guidelines.	1) Calibrate temperature sensor from Sensor Settings or use a remote temperature sensor 2) Move Control away from competing air stream or use a remote indoor sensor.
Indoor humidity display is incorrect.	Indoor humidity display needs calibration.	Calibrate humidity sensor from the Sensor Settings.
Heating will not come on.	1) System mode is not set to Heat/Auto or setpoint is set too low. 2) Minimum off time delay is being enforced. 3) Heating system may require service.	1) Set mode to heat and raise the setpoint above the room temperature. 2) Wait for 5 minutes and recheck heating equipment. 3) Check/repair system.
Cooling will not come on.	1) System mode is not set to Cool/Auto or the setpoint is too high. 2) Minimum off time delay is being enforced. 3) Cooling system may require service.	1) Set mode to cool and lower the setpoint below the room temperature. 2) Wait for 5 minutes and recheck cooling equipment. 3) Check/repair system.
Heating or Cooling is displayed, but no warm or cool air is coming from the registers.	1) There is a fan delay as the heating or cooling equipment turns on. 2) Equipment is not working properly.	1) Wait a minute for blower delays and recheck registers. 2) Check/repair system.
Fan runs all the time	1) Fan mode is set to On, Circulate or Clean mode 2) Field wiring issue 3) There is a failure in the indoor unit	1) Check Control settings to see if fan is set to On, Circulate or Clean mode. 2) Check field wiring 3) Check indoor unit for failures (such as tripped heating limit).
“+” symbol appears on Home Screen beneath Indoor Temperature readout	Both compressor heat and indoor heat are being called simultaneously	No action required, symbol is for informational purposes only
Fan is set to ON but not running.	1) Humidity Control is engaged. 2) Field wiring issue 3) Blower motor is not functioning.	1) If indoor humidity is higher than desired setpoint, the blower will cycle off with the equipment. A humidity icon will be displayed on the Fan Mode button when the blower operation is being inhibited due to high humidity. 2) Check field wiring 3) Check/repair system.
Cooling or Heating cycles too fast or too slow (narrow or wide temperature swings).	1) Check the location of the Control for drafts. 2) Cycles per hour is improperly set.	1) Seal air leaks behind Control. Relocate Control or apply remote indoor temperature sensor. 2) Adjust cycle rates in the Advanced Installer Setup.
Heat pump is not turning on; only furnace or electric heat strips are running.	1) Outdoor temperature is below compressor lockout temperature setting. 2) System mode is set to Emergency Heat. 3) Outdoor Unit may require service.	1) Adjust the compressor lockout temperature setting if desired. 2) Check/repair outdoor temperature sensor or wiring.
Cannot change system mode to desired setting.	Equipment is not configured properly.	Check the standard installer set up screen to ensure equipment is properly configured.
Screen does not respond properly to a button press	1) Screen is out of calibration. 2) Internal Control fault	1) Remove Control from sub base and reset. Follow the calibration instructions when the Control reboots. 2) Reset/Cycle power to Control by removing it from the subbase, waiting 10 seconds and replacing.

10. Notices

10.1 FCC Notice

INFORMATION TO USER

This device complies with Part 15 of the FCC Rules. Operation is subject to the following two conditions: (1) This device may not cause harmful interference and (2) This device must accept any interference received, including interference that may cause undesired operation. The antenna(s) used for this transmitter must be installed to provide a separation distance of at least 20 cm from all persons and must not be collocated or operating in conjunction with any other antenna or transmitter.

This equipment has been tested and found to comply with the limits for Class B Digital Device, pursuant to Part 15 of the FCC Rules. These limits are designed to provide reasonable protection against harmful interference in a residential installation. This equipment generates and can radiate radio frequency energy and, if not installed and used in accordance with the instructions, may cause harmful interference to radio communications. However, there is no guarantee that interference will not occur in a particular installation. If this equipment does cause harmful interference to radio or television reception, which can be determined by turning the equipment off and on, the user is encouraged to try to correct the interference by one or more of the following measures.

- Reorient or relocate the receiving antenna
- Increase the separation between the equipment and receiver
- Connect the equipment into an outlet on a circuit different from that to which the receiver is connected
- Consult the dealer or an experienced radio/TV technician for help

Any changes or modifications not expressly approved by the party responsible for compliance could void the user's authority to operate the equipment.

10.2 IC Notice

This device complies with Industry Canada license-exempt RSS standard(s). Operation is subject to the following two conditions: (1) this device may not cause interference, and (2) this device must accept any interference, including interference that may cause undesired operation of the device.The distance between user and products should be no less than 20cm

Le présent appareil est conforme aux CNR d'Industrie Canada applicables aux appareils radio exempts de licence. L'exploitation est autorisée aux deux conditions suivantes : (1) l'appareil ne doit pas produire de brouillage, et (2) l'utilisateur de l'appareil doit accepter tout brouillage radioélectrique subi, même si le brouillage est susceptible d'en compromettre le fonctionnement.la distance entre l'utilisateur et les produits devraient être au moins 20 cm

American Standard
HEATING & AIR CONDITIONING

Ingersoll Rand
Residential Solutions

The manufacturer has a policy of continuous product and product data improvement and it reserves the right to change design and specifications without notice.

Representative-only illustrations included in this document.
11/2017