Mobile Radio Full Installation Guide

SCG22 Series Transceiver

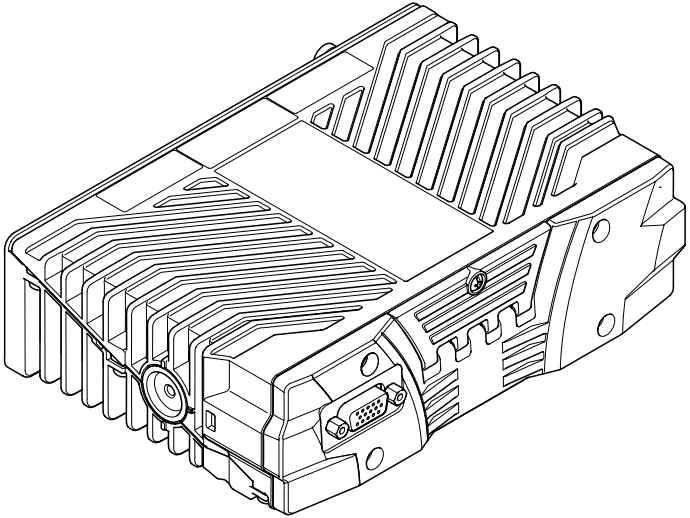

sepura

Original Instructions: ENGLISH

Document Number: SPR-DOC-04384

Issue 7.0

Copyright

© Sepura Limited 2002–2023

All rights reserved. This document is intended for the use of Sepura Limited customers and/or other parties only for the purposes of the agreement or arrangement under which this document is submitted, and no part of it may be reproduced or transmitted in any form or means without the prior written permission of Sepura Limited.

Disclaimer

Sepura's policy is to continually improve its products. The features and facilities described in this document were correct at publication, but are subject to change without notice.

Contact Details

Sepura Limited

9000 Cambridge Research Park

Beach Drive

Waterbeach

Cambridge

CB25 9TL

United Kingdom

www.sepura.com

Contents

Safety Information **2**
SCG22 Model Variant Options **2**
Console Options and Accessories **2**
Isolating Power 2
Mobile Radio Internal Back-up Battery **3**
Installation Precautions **3**
Installation Guidelines and Recommendations **4**
Operator Access and Safety 4
Temperature and Orientation Considerations **5**
Location Considerations 5
Connector Sealing 6
RF Compatibility Checks **7**
Adjusting the SCC3 Console **7**
SCG22 Variants **8**
Parts Supplied **8**
Additional Equipment **8**
Connecting Leads 8
Mounting Kits 8
SCG22 Components and Connections **9**
Rear Panel 9
Front Panel 9
Fitting a SIM Card **10**
DIN Slot Mounting Considerations **10**
Front Mounting the SCC3 Console **11**
SCG22 Mounting Kit Options **14**
SCG22 DIN Mount Kit 14
Mounting Bracket 16
SCG22 U Bracket Mount Kit 16
SCG22 Cabling and Connections **17**
DC Supply Connection 17
Digital I/O Connections 18
USB Connections 18
Loudspeaker Connections 18
Ethernet Connection (optional) 19
Antenna Connections 19
Cabling and Connections Overview - All Models 20
Cabling and Connections to an SRG Installation 21
USB Programming Lead (300-02009) 22
SCG Power/Ignition Lead (300-02010) 22
Loudspeaker and IO Connection Options 22
Programmable I/O 25
LED Indicator 25
SCC3 Console **26**
SCC3 Connections and Cabling 26
SCC3 Mounting Options 27
Handset-Based Console (HBC3) **33**
Configuring the HBC3 35
Fist Microphone/Handset **35**
Remote Microphone and Switches Installation 35
Programming/Customising the SCG22 ..... **36**
Programming 36
Customising 36
Connecting a Remote SIM Reader **37**
Mobile Data Terminal **37**
Technical Information **37**

Safety Information

READ THE TETRA PRODUCT SAFETY GUIDE (SPR-DOC-00170) SUPPLIED WITH THE SCG22 FOR IMPORTANT INFORMATION ABOUT SAFELY OPERATING THIS PRODUCT.

ALWAYS POWER OFF the mobile radio in environments where RF wireless devices could potentially cause an explosion. Potentially hazardous areas are not always signed. Obey all signs and instructions relating to the usage of RF wireless devices.

DO NOT touch the antenna when the mobile radio is powered on.

In order to reduce the risk of RF burns, the antenna must always remain connected when the equipment is powered on. DO NOT connect or disconnect the antenna whilst the equipment is powered on.

Potential risk of burn injury. DO NOT touch the heatsink fins when the transceiver is powered on.

ONLY fit an approved accessory. If a non-approved accessory is fitted, it may compromise the product safety ratings and may void any product warranty.

DO NOT attempt to dismantle this product. Servicing and repairs to this product must be performed by trained service technicians at Sepura approved service centres.

Exposure to RF Energy

Sepura designs and manufactures products to meet strict guidelines and international standards relating to Radio Frequency (RF) energy and the potential health risks associated with using RF wireless devices. If you have any concerns relating to long term health risks associated with using RF wireless devices, you should obtain advice from your employer.

Operation

It is the responsibility of the person operating the product to ensure that it is operated safely at all times, and that local laws and regulations governing the usage of Radio Frequency (RF) wireless devices are observed. Obey all signs and instructions relating to the usage of RF wireless devices.

Regulatory Compliance

This product must be installed in accordance with national and local radio communications authorities and/or Health and Safety regulations.

This product may affect public broadcast radio, security code alarm systems and some engine management systems.

Unpacking

Unpack the container(s) and ensure that all items specified on any delivery note are present and received in good condition.

If any of the goods are damaged or not supplied, contact your service provider within 10 days of receipt of equipment.

Consoles or accessories are not shipped in the container with the SCG22 mobile radio due to the many combinations available.

Note that the accessory pack must be specified at the time of ordering.

ALWAYS keep documentation supplied with the product for future reference and pass on to any person who is responsible for operating the product.

SCG22 Model Variant Options

The SCG22 mobile radio is supplied in model variants, with different functions and connections to suit the installation. This installation guide describes all the functionality and connections available, highlighting options where appropriate.

Console Options and Accessories

There are many options available for the installation of the SCG22. Depending on the model variant, the SCG22 can accommodate up to two remote consoles, for example an SCC3 and an HBC3, with additional accessories such as a fist microphone or handset connected through the SCC3.

The mobile radio is designed to be installed within a vehicle, on a motorcycle or as a standalone unit within an office environment using a Desk Mount Unit (DMU).

There are a number of vehicle, motorcycle and desktop accessories that can be attached to the SCC3. Refer to the installation instructions supplied with these products. See our website for more information (sepura.com).

Isolating Power

Vehicle Installation

CAUTION! The fuse in the power supply line must be used as the isolation mechanism and removed before any connections are made to the SCG22.

Desk Mount Unit (DMU) Installation

CAUTION! The power supply connector must be used as the isolation mechanism and must be removed before any connections are made to the SCG22.

Mobile Radio Internal Back-up Battery

CAUTION! The SGC22 contains a backup battery. The battery must not be replaced by the user. The equipment must be disposed of using correct WEEE requirements. The equipment must not be dismantled, or left in conditions outside of the stated environmental storage and operating specifications.

The SCG22 mobile radio has a small rechargeable internal back-up battery. This battery powers the internal Real Time Clock in the event that the main power to the product is removed. The battery may have discharged during the manufacturing process or if the product has been in storage for some time.

When the product is connected to its main supply, the back-up battery will charge regardless of whether the product is powered on or not. The period for a full charge may be up to 48 hours.

Installation Precautions

WARNING! DO NOT smoke or use naked flames when working near the vehicle's fuel system.

WARNING! This equipment is not suitable for use in locations where children are likely to be present.

CAUTION! Only use hand tools and do not over-tighten screws and fixings.

CAUTION! Risk of product damage. When carrying out installation requiring the removal of product covers, ESD precautions must be taken.

READ ALL THE INSTRUCTIONS before attempting to install the SCG22. If you do not understand the instructions, STOP and contact your service provider or Sepura for assistance.

Always read the vehicle manufacturer's handbook before starting to install the product. Installation of this product may affect the vehicle electrical systems. Contact the vehicle manufacturer if you are not certain if it is safe to install this product.

CAUTION! Prolonged operation of the SCG22 with the vehicle engine powered OFF, may drain the vehicle's battery.

Disconnect the vehicle's battery before commencing installation (be aware of the effect on the public broadcast radio security code, alarm systems and some engine management systems).

Ensure that fuel lines, hydraulic lines and existing cables are not damaged during installation.

Ensure that the installation does not impede the normal operation of the vehicle, including the operation of any safety device, e.g., airbags and seatbelt tensioners.

Speed control, fuel injection, anti-lock braking, navigation, air bag and other electronic systems are relatively immune to RF interference. However, if difficulty is experienced or faulty operation is suspected, consult the vehicle's dealer.

ALWAYS perform RF compatibility checks after installation. See "RF Compatibility Checks" on page 7.

RF Energy

Motor vehicle manufacturers make use of electronic vehicle control systems, e.g., ignition, anti-skid devices etc. The following information is supplied to ensure that there is no radio frequency interference effect upon the vehicle's electronic systems.

To prevent interference with any other electronic systems in the vehicle, the antenna should be mounted as far away as possible from these units and their associated cables. Refer to the vehicle manufacturer's handbook to locate these items.

Consult the manufacturer's handbook to establish whether it is practical to disconnect the vehicle battery without affecting devices, such as central locking mechanisms, engine management computers, security-coded in-car entertainment units etc.

Specialised Vehicles

The installation on certain specialised vehicles, such as fuel tankers and fire-fighting vehicles may be subject to additional safety regulations which must be closely observed. Prior to commencing an installation on such a vehicle, make sure that any relevant safety regulations are fully understood.

Petrol/Diesel Powered Vehicles

Ensure that there are no petrol/diesel leaks before commencing an installation involving the use of electric tools as these can produce sparks. Ensure that no damage to the fuel tank or fuel lines occurs when drilling holes.

Gas Powered Vehicles

Before installation starts ensure that there are no gas leaks before commencing an installation involving the use of electric tools as these can produce sparks. DO NOT USE A NAKED FLAME. Butane and propane are heavier than air, so if there is a leak the gas may lay on the floor of the boot. The gas is detectable by its characteristic smell. The point of escaping gas may show signs of frosting. The vehicle owner should arrange for the leak to be repaired before the installation is commenced.

Ensure that no damage to the gas tank or gas lines occurs when drilling holes. Supply cables should be run, if possible, on the opposite side of the vehicle to the gas fuel pipe.

Vehicles Fitted with Electronic Devices

In theory, any vehicle electronic systems could be affected by the presence of an RF field of sufficient intensity, which when detected may cause the device to malfunction. The source of RF may be an SCG22 installed in the vehicle itself or one operating in another vehicle in close proximity. If interaction did occur, loss of control could result for the duration of the transmission.

In the interests of safety, the user must be asked to test the vehicle when the installation is complete.

Installation Guidelines and Recommendations

This installation guide provides basic information about installing the mobile radio into land based vehicles (not marine based vehicles or motorcycles).

The installation of this product must be performed by a suitably skilled and technical competent person such as a qualified vehicle installation technician.

This product can be installed into various makes and models of vehicles and therefore these instructions are not a definitive guide to installing the product into vehicles.

The installation should comply with *FCS1362 CODE OF PRACTICE for the installation of mobile radio and related ancillary equipment in land based vehicles* (see http://www.fcs.org.uk).

Before you start the installation, ensure that you have all the accessories, including cables.

Operator Access and Safety

Install the console in a position where the operator has easy access to the controls and the microphone when wearing a seat belt. The controls must also be within the driver's normal field of vision.

DO NOT fit the console above the driver's or passenger's head, or in other positions where the console would become a hazard in an accident or is at risk of damage from any occupant or carried items.

The microphone/handset hook mount must be fitted such that the microphone/handset is easily accessible and the cable cannot interfere with the vehicle control, or with the driver's feet. Preferably, the loudspeaker should be installed such that the grille is facing the operator, but out of sight of the remote hands-free microphone (if fitted).

Temperature and Orientation Considerations

WARNING! The heatsink may become hot after long periods of transmission. Ensure accidental contact with the heatsink is not possible.

Reliable transmit operation will be achieved if the SCG22 is mounted such that the heat sink fins receive a free flow of air, i.e., if it is mounted within 15° of the normal vertical orientation with no restriction to the flow of convected air. For any other orientation, varying degrees of degradation may result.

Fitting the SCG22 or console on top of the dashboard is not recommended.

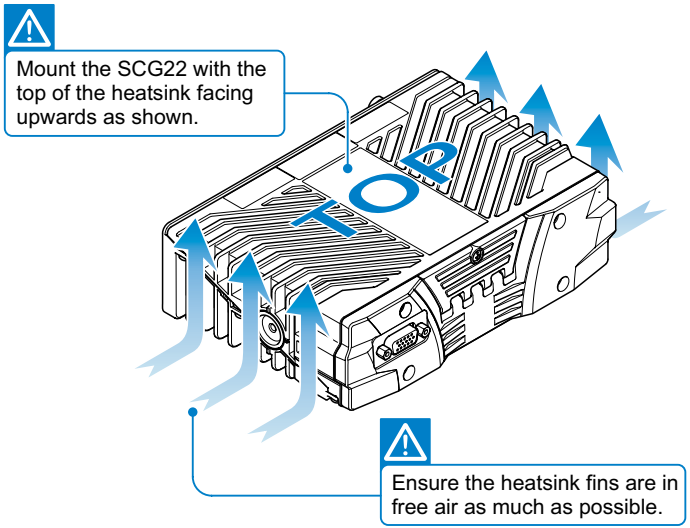

Exposure to direct sunlight may cause the temperature to rise to over 80 °C (176°F). Prolonged exposure to these temperatures may damage the equipment and invalidate any product warranty.

Do not mount the SCG22 close to a heat source, e.g., in front of a heater vent.

Location Considerations

The SCG22 must be fitted within the interior of the vehicle (excluding the engine compartment) and protected from the external environment and vehicle cleaning operations.

Locate the SCG22 away from sources of strong electromagnetic interference including cables powering the starter motor or the electric traction motor in electric vehicles.

Ensure that the installation does not impede the normal operation of the vehicle, including the operation of any safety devices such as airbags and seatbelt retainers.

The SCG22 should be positioned so that it does not obstruct, or become at risk of damage from, any occupant or carried items.

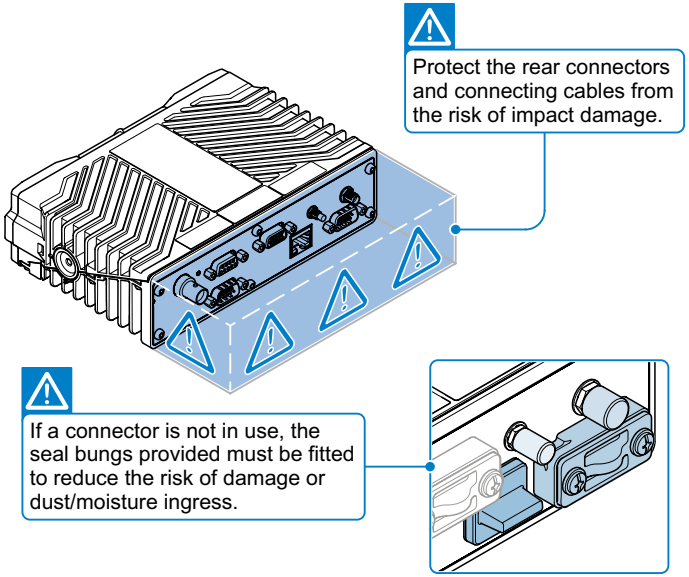

Ensure sufficient space is provided above the installation to allow fitment and removal of the SCG22.

Connector Sealing

To maintain the product's IP54 rating to protect against dust and moisture ingress, the SCG22 must be fitted with connector seals. Any unused connectors must be fitted with a seal bung. An IP54 Sealing Kit is provided with the SCG22 consisting of all the sealing parts required.

> **CAUTION!** Before fitting, inspect and clean all the sockets, connectors and sealing kit components. Debris and other contaminants may compromise the performance of the sealing components.

D-Connectors

1. Fit D-type seals over all the front and rear D-connectors, in the correct orientation as shown and press firmly in position.

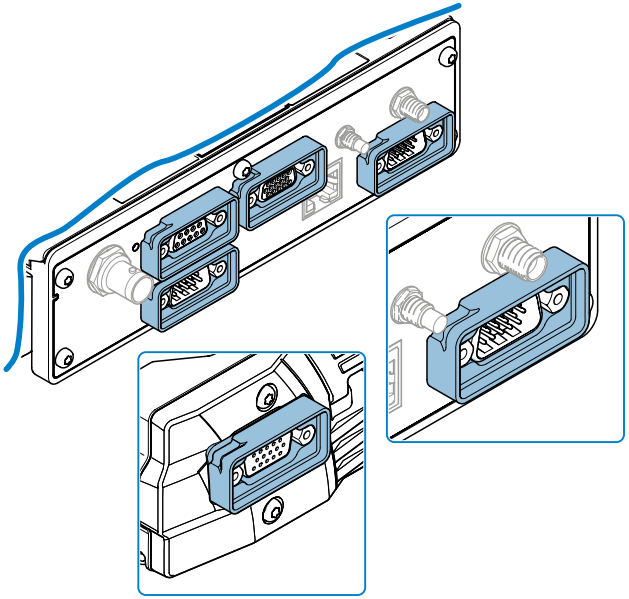

2. If the D-connector is currently unused, fit a seal bung fully into the D-type seal and tighten the screws within the specified torque range.

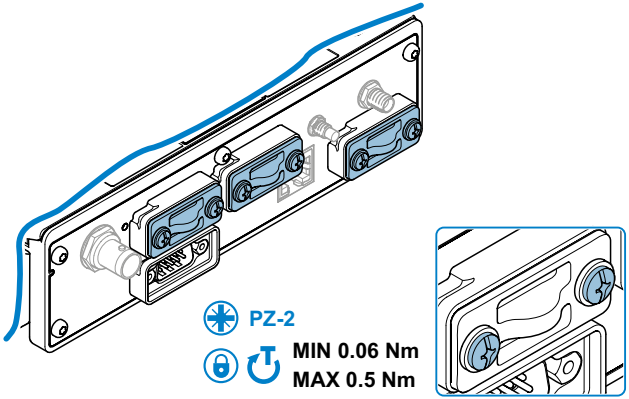

Other Connectors

- If the SMA or SMC sockets are unused, fit the seal bungs provided
- If the RJ45 socket is unused, fit the seal bung provided, observing the correct orientation

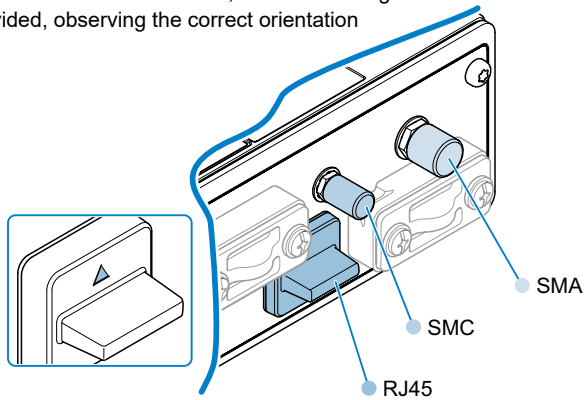

RF Compatibility Checks

On completion of the installation, the following checks must be carried out if the vehicle is equipped with electronic anti-skid, electronic ignition or engine management systems.

> **WARNING!** In the event of an apparent malfunction in the braking or any other systems during RF compatibility checks, the SCG22 installation should be rendered inoperative and the vehicle manufacturer should be contacted before any further use is made of the SCG22 installation. Unqualified persons should not attempt to modify these units in any way.

The transmitter should be operated only for the time required to make an observation. Ideally these checks should be performed on the TETRA system. If this is not possible, perform the checks in DMO.

An assistant will be required for the following checks:

1. With the vehicle stationary and the engine running at fast idle, operate the transmitter. Check that the brake lights do not illuminate and that the engine continues to run normally, i.e., with no surging or cutting out.
2. Operate the brake pedal, key the transmitter and check that the brake lights do not extinguish.
3. Put the vehicle into motion at a speed of 15 – 25 km/h (10 –15 mph), key the transmitter and operate the brake pedal simultaneously. Check that the braking action is normal and that the engine does not surge or cut out.

Adjusting the SCC3 Console

> **CAUTION!** To prevent potential damage, follow the guidance provided below when adjusting the mounted angle of the SCC3 Console during installation and use.

The SCC3 Console may be fitted to a mounting option where the viewing angle can be adjusted during installation or use:

- Loosen the locking features sufficiently so the casing of the console is not placed under strain when adjustments are made
- Only hold the console using the end grip areas and apply even pressure when adjusting the viewing angles

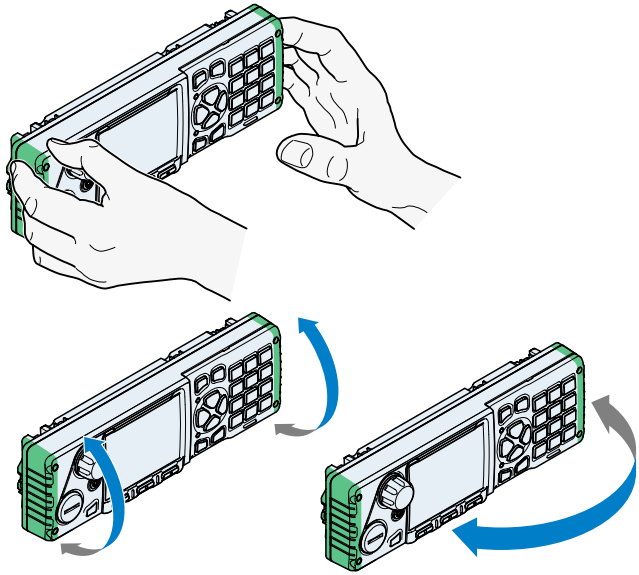

- Re-tighten the locking features to secure the console in the new position

SCG22 Variants

The following variants of the product are available:

- Single Console
- Single Console + SD Card
- Single Console + Bluetooth Wi-Fi +SD Card
- Single Console + Bluetooth Wi-Fi + SD Card + ESM
- Dual Console + Bluetooth Wi-Fi + SD Card
- Dual Console + Bluetooth Wi-Fi + SD Card + ESM

Parts Supplied

The following items are supplied with the SCG22.

Part no.	Description	Qty
300-02010	SCG Power / Ignition Lead	1
300-02011	SCG Loudspeaker / IO Lead	1
300-00086	Transceiver Plate Mount Kit	1
SPR-DOC-04439	Mobile Radio Compact Installation Guide	1
SPR-DOC-03196	SCC3/HBC3 Quick Reference Guide	1
SPR-DOC-00170	Product Safety Guide	1
	IP54 Connector Sealing Kit	1

Additional Equipment

Connecting Leads

Part no.	Description
300-02007	SCG Power / Ign / IO Adapter Lead
300-02009	SCG USB Programming Lead
300-02010	SCG Power / Ignition Lead
300-02011	SCG Loudspeaker / IO Lead
300-02012	SCG Loudspeaker / IO USB Host Lead
300-02013	SCG Loudspeaker / IO USB Slave Lead
300-02014	SCG Expansion Board Loudspeaker / 8 GPIO Lead
300-02015	SCG Ethernet Sealing Kit
300-02016	SCG DMU Cables / Kit

Mounting Kits

Part no.	Description
300-02050	SCG22 Local Console Adaptor Kit
300-02051	SCG22 DIN Mount Kit
300-02052	SCG22 U Bracket Mount Kit
300-01117	Console Dash-Mount Kit
300-00804	Console DIN Fitting Kit
300-00784	Console AMPS Backplate
300-00629	AMPS Fitting Kit
300-00860	AMPS Base Plate (1" ball)
300-00861	Handlebar Bracket
300-00862	RAM Double Socket Arm

SCG22 Components and Connections

Rear Panel

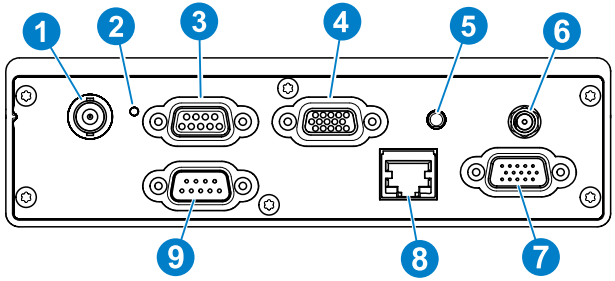

Front Panel

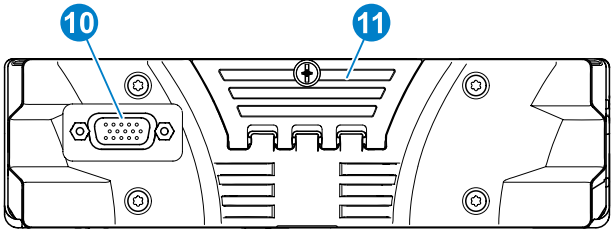

	Component/Connector	Connector Type	Description
1	TETRA Antenna	BNC	Connection for a suitable external TETRA antenna
2	LED Indicator	N/A	Illuminates red when the SCG22 has booted up
3	I/O1/SPK1/PRG	9 Way D-sub, Female	First console loudspeaker, USB programming , 2 GPIO lines, PEI and packet data over USB
4	Console 1	15 way D-sub, Female	First Console (HBC3/SCC3) supporting radio programming, PEI, packet data and remote SIM card reader over serial interface
5	GNSS Antenna	SMC	Connection for a suitable external GNSS antenna (e.g., GPS)
6	Bluetooth® & Wi-Fi Antenna*	SMA	Connection for a suitable external Bluetooth/Wi-Fi antenna
7	I/O2/SPK2*	15 way D-sub, Male	Second console loudspeaker and 8 GPIO lines
8	Ethernet*	RJ45	
9	Power	9 Way D-sub, Male	DC power input to the SCG22 with ignition sense (e.g. from a vehicle)
10	Console 2*	15 way D-sub, Female	Second Console (HBC3/SCC3) supporting radio programming, PEI, Packet data and Remote SIM card reader over Serial interface
11	SIM Card Cover	N/A	

*Single console variants without Bluetooth Wi-Fi of the SCG22 do not have connectors 6, 7, 8 and 10
Single console variants with Bluetooth Wi-Fi of the SCG22 (HVIN: 1-8960-0-7 and HVIN: 1-8V60-0-7) do not have connectors 7, 8 and 10

Fitting a SIM Card

1. Undo the cover securing screw and tilt open the SIM card cover.

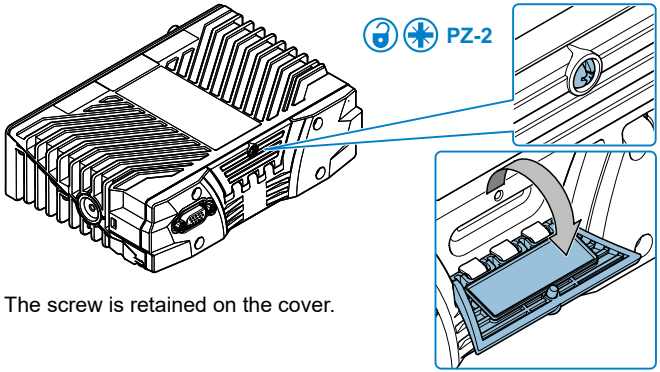

The screw is retained on the cover.

2. Carefully fit the SIM card into the slot, pushing in fully until it clicks into position.

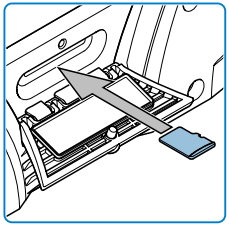

CAUTION! To maintain the product IP seal rating, ensure that the SIM card cover is refitted and the securing screw is fully hand-tightened.

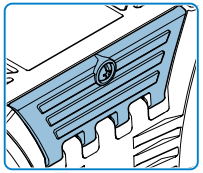

MAX 0.5 Nm

Note: For installations where a remote SIM reader is used, see the section "Connecting a Remote SIM Reader" on page 37.

DIN Slot Mounting Considerations

CAUTION! Ensure there is enough depth in the DIN slot to accommodate the SCG22 and connected cables without causing damage.

If the SCG22 is mounted into a DIN slot, consideration must be given to the depth available to safely accommodate the radio and any connecting cables.

If there is a depth restriction in the DIN slot:

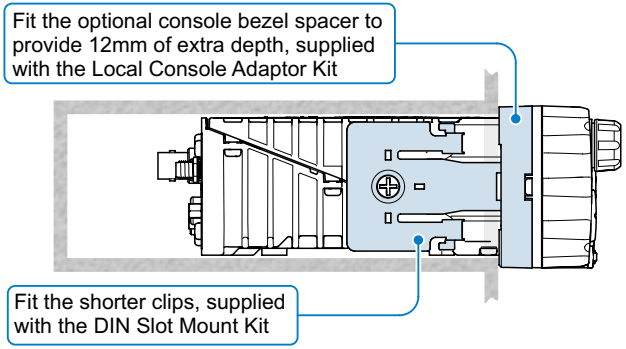

If there are no depth restrictions:

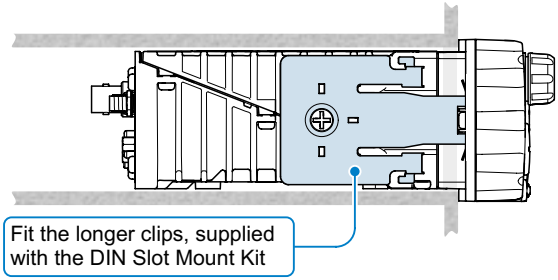

Front Mounting the SCC3 Console

The SCC3 console can be fitted directly to the front panel of the SCG22 using the SCG22 Local Console Adaptor Kit (300-02050). The combined unit can then be mounted using one of the bracket options, or into a DIN mount slot in the vehicle.

> **Note:** For installations where the SCC3 is mounted separately to the SCG22, see the section "SCC3 Mounting Options" on page 27.

1. Undo the SIM card cover screw. The screw is retained on the cover.

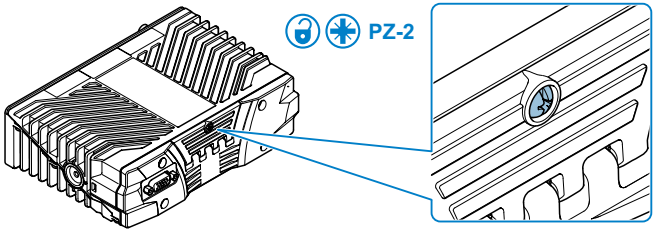

2. Remove the four front fascia fixing screws and retain them for re-use.

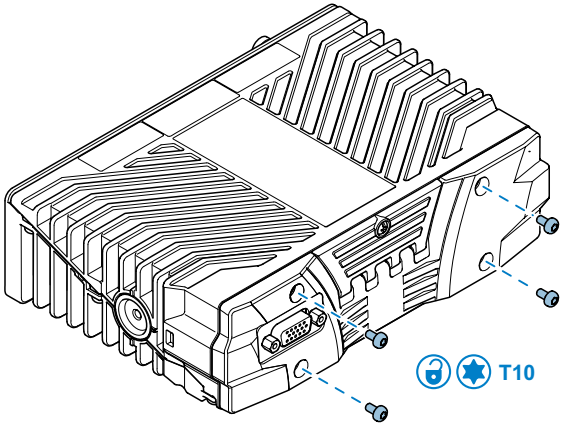

3. Carefully pull the fascia cover away from the SCG22. Apply even pressure to ensure the D-connector PCB is removed without damaging the connectors.

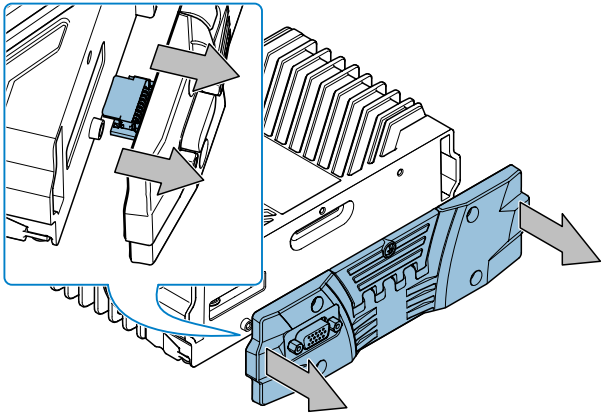

4. If the SCG22 is to be fitted in a DIN slot with depth restrictions, an optional bezel is provided in the kit to act as a spacer. Slide the bezel over the front panel of the SCG22 in the orientation shown.

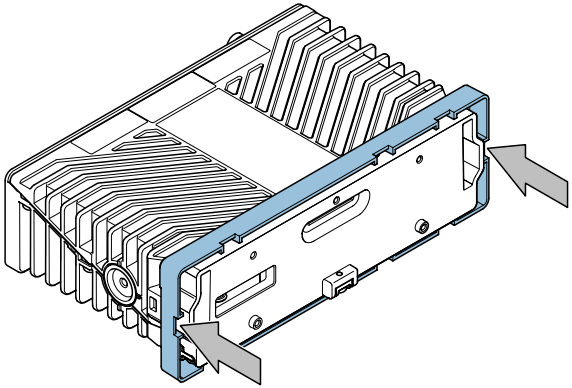

5. Fit the connecting cable supplied in the mounting kit to the front connector on the SCG22. Ensure the connector is firmly clipped in position.

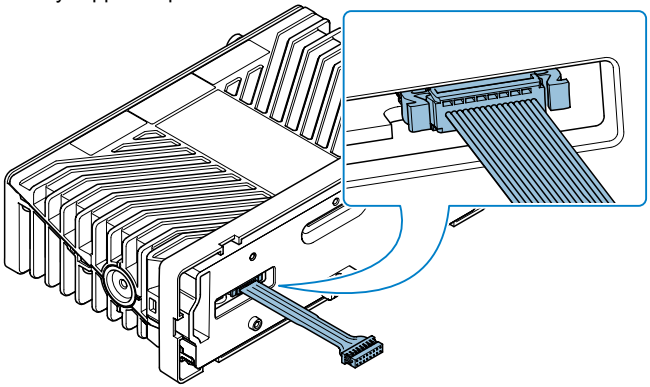

IMPORTANT! Fit a SIM card before fitting the SCC3 adapter plate. The SIM card is not accessible after the SCC3 has been fitted.

6. Fit the SCC3 adapter plate using the four screws removed in step 2.

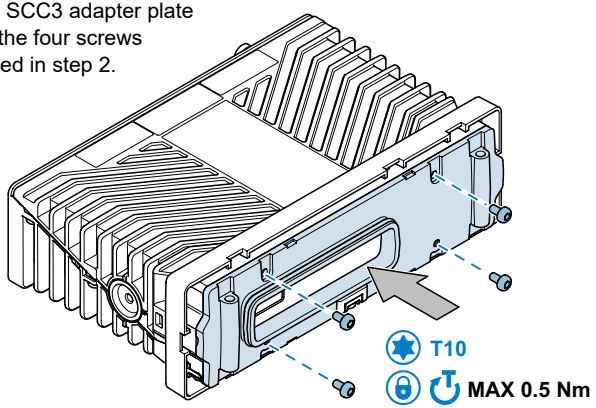

CAUTION! ESD precautions must be taken during replacement of the rear cover.

7. Remove the eight screws on the rear of the SCC3 and remove the existing cover. Retain the screws for re-use.

Standard Cover

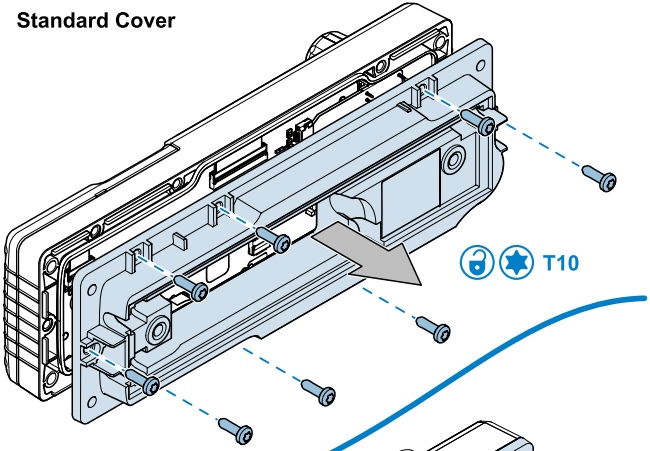

IP67 Cover

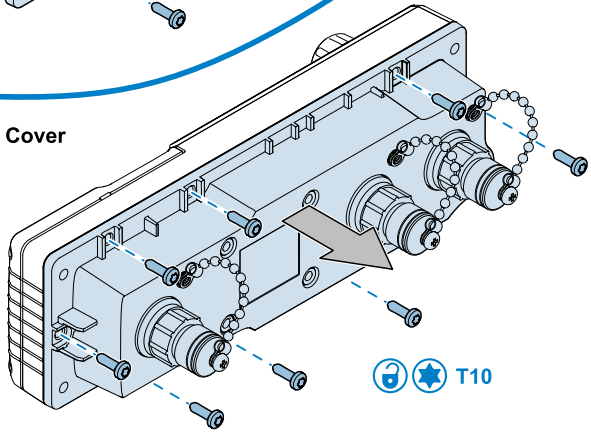

CAUTION! To maintain the product IP seal rating, care must be taken not to damage the rear cover seal. Do not stretch the seal when refitting.

8. Carefully remove the rear cover seal from the existing cover. Fit the seal into the channel on the adaptor rear cover included with the mounting kit.

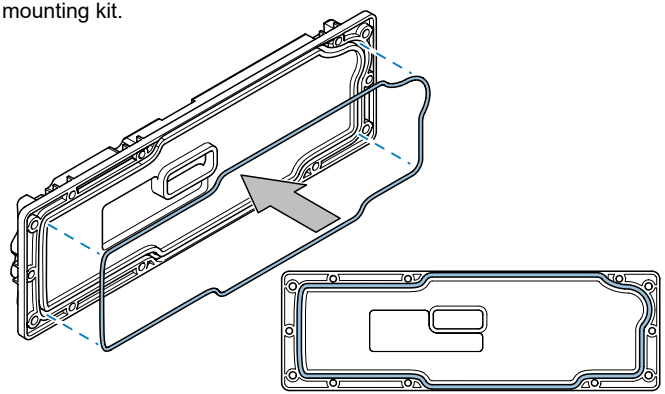

9. Fit the new rear cover to the SCC3 using the eight screws removed in step 6.

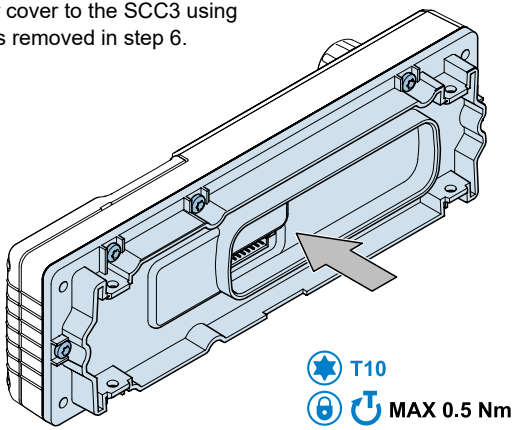

10. Fit the silicon blocks (supplied with the kit) firmly into position either end of the new rear cover as shown.

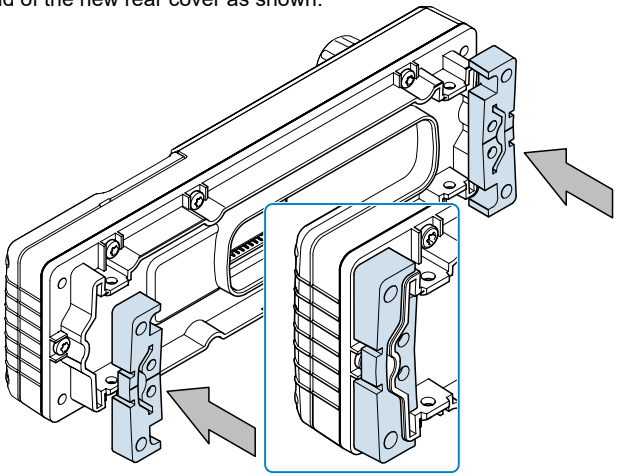

11. Fit the other end of the cable to the socket on the of the SCC3.

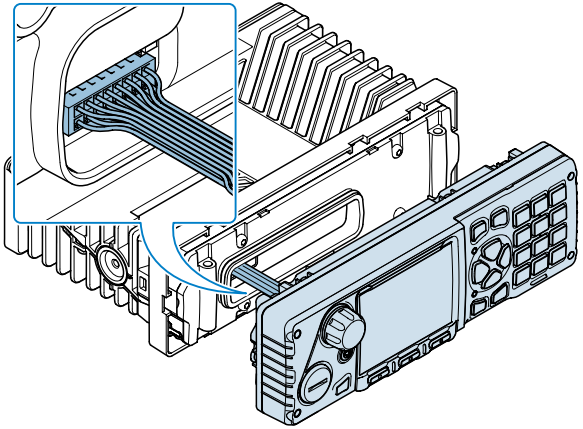

12. Fit the SCC3 on to the adapter plate, taking care to ensure the cable is neatly folded in the seal housing and does not get trapped. Secure in position using the four screws provided.

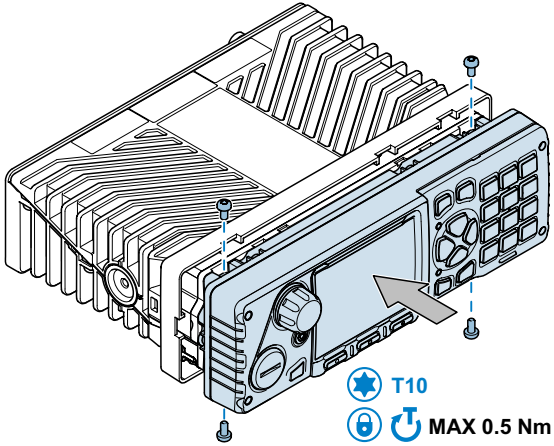

13. If fitted, slide the optional bezel up to the rear cover of the SCC3.

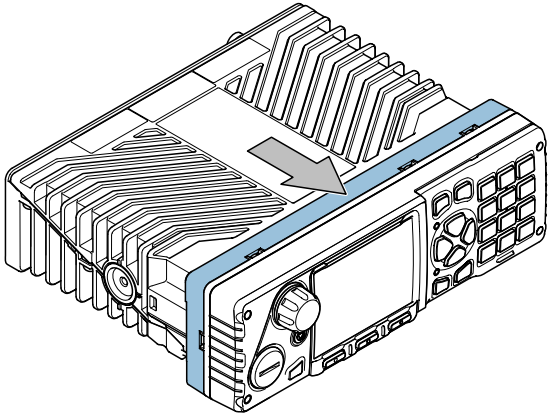

SCG22 Mounting Kit Options

The SCG22 can be mounted using a range of options to suit the installation. The mounting options can be used with or without the SCC3 console fitted to the front panel of the SCG22.

SCG22 DIN Mount Kit

1. Fit the appropriate length DIN mount clips to both sides of the SCG22 and secure in position with the screws provided.

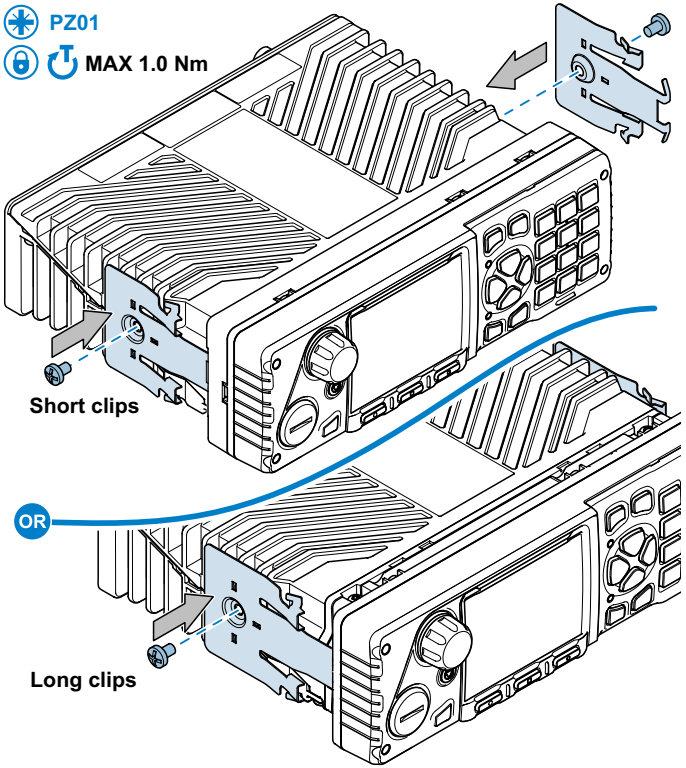

2. Fit the DIN cage into the slot within the vehicle.

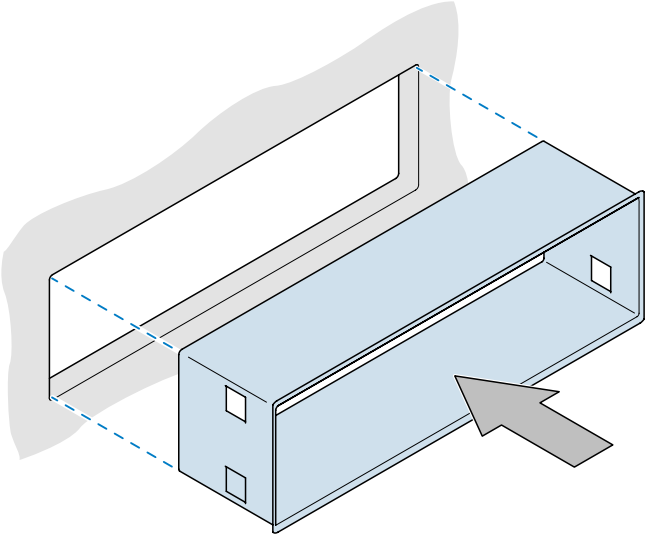

3. When all the cabling has been routed and connected to the rear panel of the SCG22, slide the unit fully into the DIN cage.

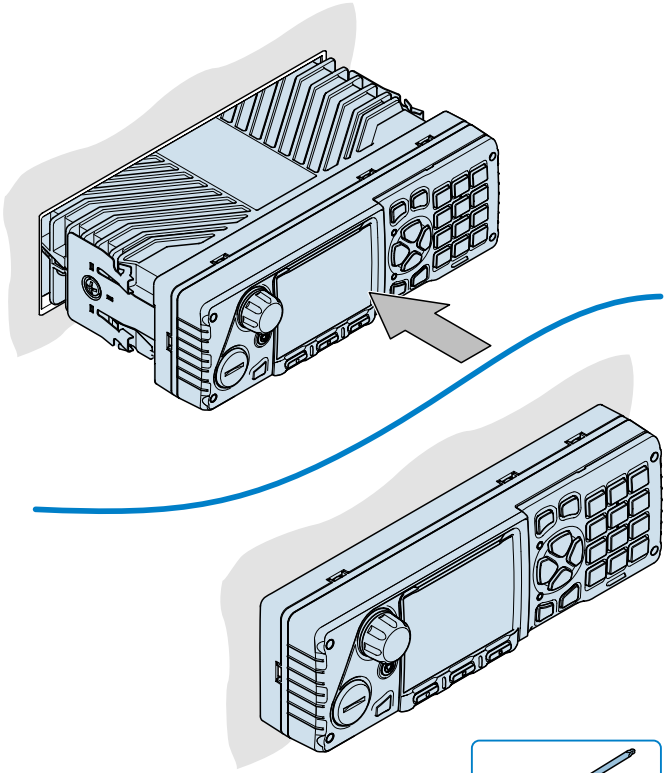

To remove, use the DIN release tools (provided)

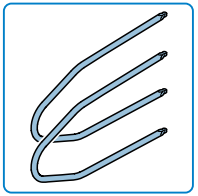

Mounting Bracket

CAUTION! Ensure fixing screws are of an appropriate type and length for the surface material the bracket is being mounted on to.

If the SCG22 needs to be installed on a flat surface, such as in a car boot, the fixed mounting bracket option supplied (in the box) can be used.

Fit the mounting plate to the bottom of the SCG22 using the four screws supplied. Secure the mounting bracket and SCG22 assembly to the desired surface using four screws. The bracket can be used as a template to mark and pre-drill the holes if required.

IMPORTANT! Allow sufficient space around the SCG22 for cables and access to connectors

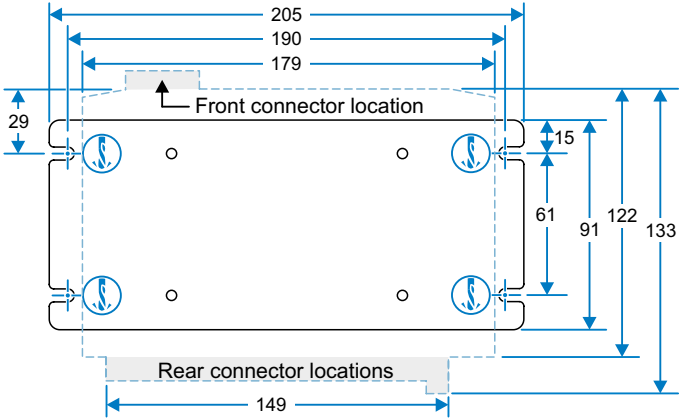

⟷	All dimensions are in millimetres
- - - -	Outline of SCG22 profile.
	Drill four holes at the fixing centres indicated to suit the fastener type (5 mm MAX diameter)

SCG22 U Bracket Mount Kit

The SCG22 can be fitted to the optional U Bracket Mount Kit (300-02052), providing a flexible mounting solution to a flat surface. If the SCC3 console is fitted to the front panel of the SCG22, the bracket can be tilted to provide an optimum viewing angle.

1. Fix the bracket securely in position, using an appropriate number and type of fixing screws for the surface material.

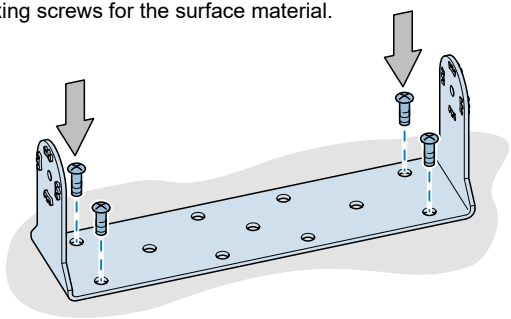

2. Lower the transceiver into the bracket and align the fixing holes. Fit the two adjustment knobs and tighten at the desired angle.

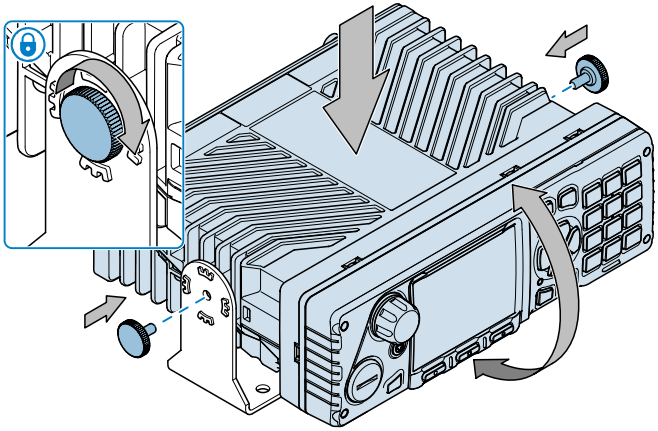

SCG22 Cabling and Connections

WARNING! 12V supply leads, antenna cables and speaker wiring must be routed as far away as possible from gas or fuel lines, and any in-vehicle electrical wiring. This reduces the risk to safety in the event of a leak.

CAUTION! Ensure that the cables are routed so that they are kept clear of any existing vehicle system cabling. Secure all cabling to eliminate the possibility of damage by sharp edges or moving parts.

All cabling should be hidden and not left loose.

CAUTION! Ensure that the colour console cable and any loudspeaker cables are routed so that they are kept well clear of antenna cables and of any other electronic devices such as electromagnetic systems or AM/FM radios.

CAUTION! To maintain the product's IP54 rating to protect against dust and moisture ingress, D sub connector thumbscrews must be tightened firmly by hand.

CAUTION! Legacy console cables and pre-existing cable installations may not be fully sealed, which would compromise the product's IP54 rating.

Note: Both the remote console and loudspeaker extension cables are colour coded blue at the SCG22 end to aid installation before the SCG22 is installed.

DC Supply Connection

CAUTION! The transceiver is designed for nominal 12V negative earth systems. DO NOT use on other supply systems because this will result in damage to the product.

Note: When mounted, it is recommended that the casing of the SCG22 is grounded to the vehicle's metal body.

The following lead options provide connection to the DC supply:

- SCG Power / Ignition Lead
- SCG Power / Ign / IO Adapter Lead

It is recommended that the power cable runs are kept as short as possible. In a new installation where the SCG Power / Ignition Lead is used:

1. With the SCG22 end of the power connector resting in its intended final position, route the wires to the vehicle battery, threading the cable through the bulkheads if necessary (include the blue wire where ignition switching is not required, see 3 below).
2. The positive power line must include a fuse as close as possible to the power source. The negative power line must be connected close to the battery-to-vehicle-body connection (not directly to the battery) and must not include a fuse.
3. The blue wire provides an ignition sensing input. If ignition switching is required, trim the wire to length so that it can be wired, via a fuse, to the ignition switch, using the splicing connector provided. Otherwise this wire must be connected, via a fuse, to the permanent positive supply. A fuse must always be fitted close to where the wire is connected.
4. Check the installation and fit the blade fuses. Fuse rating:
    - Positive supply 10A, Ignition sense 1A (Automotive 19 mm blade type - Littelfuse ATO®).

Loudspeaker Connections

The following lead options provide connection to loudspeakers:

- SCG Loudspeaker / IO Lead
- SCG Loudspeaker / IO USB Host Lead
- SCG Loudspeaker / IO USB Slave Lead
- SCG Expansion Board Loudspeaker / 8 GPIO Lead

CAUTION! The transceiver will be damaged if either of the loudspeaker conductors (grey twin conductor cable) is connected to ground. If the loudspeaker output is to be connected to other audio systems, an audio isolation transformer must be used.

Digital I/O Connections

The following lead options provide programmable IO connection lines:

- SCG Power / Ign / IO Adapter Lead
- SCG Loudspeaker / IO Lead
- SCG Loudspeaker / IO USB Host Lead
- SCG Loudspeaker / IO USB Slave Lead
- SCG Expansion Board Loudspeaker / 8 GPIO Lead

If any of these IO connection options are to be used, see the section "Programmable I/O" on page 25.

CAUTION! If not used, fold and tie any unterminated IO line wires so that they are tidy and cannot make electrical connection with other components or conductive surfaces.

USB Connections

A USB 2.0 Full-Speed 12Mbps host* connection lead is available for connecting approved USB devices:

- SCG Loudspeaker / IO USB Host Lead

CAUTION! *Do not exceed the maximum current rating when powering USB devices.

Note: The USB host mode is not currently supported on the SCG platform and will be included in a future software release.

USB connection leads are available for programming the SCG22:

- SCG Loudspeaker / IO USB Slave Lead
- SCG USB Programming Lead

CAUTION! The protective cover must be fitted over the USB plug when the lead is not in use. The SCG22 may be prone to adverse performance if the metal body of the USB plug touches the vehicle's metal body.

After programming is completed, fit the retained protective cover over the metal body of the USB plug. Ensure the lead is folded away where it cannot be damaged, but is still accessible for future programming operations.

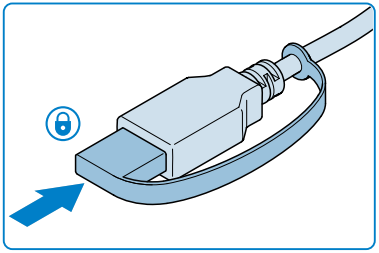

Ethernet Connection (optional)

The SCG22 RJ45 Ethernet socket provides an additional connection for data.

CAUTION! To maintain an IP54 rating, follow the instructions below to prevent any water ingress.

Ensure the RJ45 connector is fully inserted into the socket and the sealing boot skirting is pressed firmly against the rear panel.

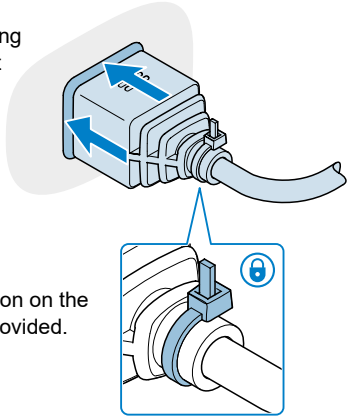

Secure the sealing boot in position on the cable firmly, with the cable tie provided.

The connector sealing boot and cable must not be installed with a bend angle more than 25° perpendicular to the rear panel. Any larger bend angle will compromise the sealing boot skirting and risk water ingress.

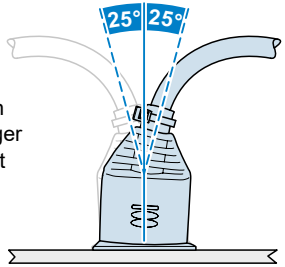

Antenna Connections

WARNING! Observe all safety warnings relating to the location and use of the antennas.

CAUTION! To maintain an IP54 rating, the BNC, SMC and SMA connectors must provide a seal.

TETRA Antenna

For best all round performance of the product, the antenna should be fitted on the centre of the vehicle roof. Alternative positions, such as wing mounting, will give degraded performance. The coaxial feeder should be secured along its length to eliminate the possibility of damage by sharp edges or moving parts.

GNSS Antenna Installation

Depending on the model, the SCG22 has the option to support GNSS capability. Please note that when configured, the transceiver can track one or a combination of GLONASS, GPS, Galileo, and BeiDou2 satellites.

The antenna unit connects to a SMC connector on the rear panel of the transceiver and should, ideally, be mounted on the highest point of the vehicle (i.e., roof) with an uninterrupted view of the sky, and as far from the TETRA antenna as possible. For mounting, follow the manufacturer's installation instructions. It is recommended to fit the GNSS antenna connector before connecting the Remote Console Cable.

An active antenna is recommended, the supply of which is on the centre pin, 5 V nominal, 40 mA maximum. This supply feed is short circuit protected.

Bluetooth/Wi-Fi Antenna Installation (optional)

If a Bluetooth/Wi-Fi receiver is fitted at the time of manufacture, a Bluetooth/Wi-Fi antenna socket will be fitted.

The antenna unit connects to a SMA connector on the rear panel of the transceiver and should, ideally, be mounted on the highest point of the vehicle (i.e., roof), and as far from the TETRA antenna as possible. For mounting, follow the manufacturer's installation instructions. It is recommended to fit the Bluetooth/Wi-Fi antenna connector before connecting the Remote Console Cable.

Cabling and Connections Overview - All Models

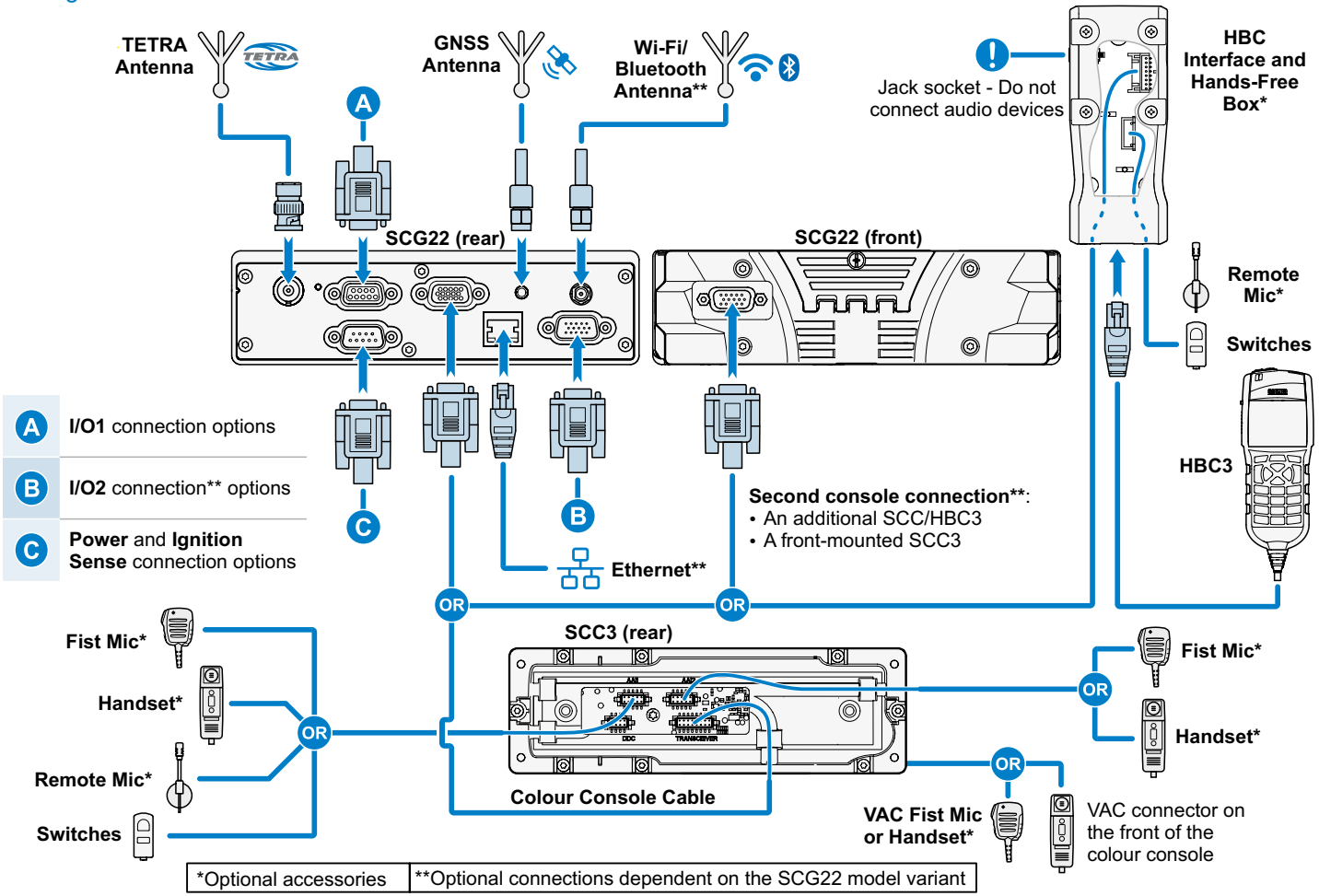

Cabling and Connections to an SRG Installation

If the vehicle was previously fitted with an SRG mobile radio installation, the SCG22 can be connected to the existing SRG power cable using one of the optional adapter cables available. Existing ignition, IO and loudspeaker functions from the current installation will be retained.

SCG Power / Ign / IO Adapter Lead (300-02007)

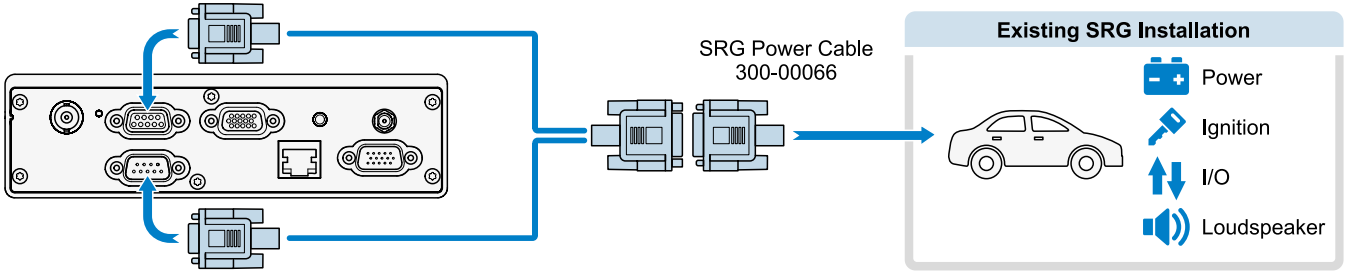

SRG I/O Compatibility

Only two of the existing SRG I/O lines are connected through the adapter lead and available for use with the SCG22.

The I/O lines must be configured as shown to function correctly.

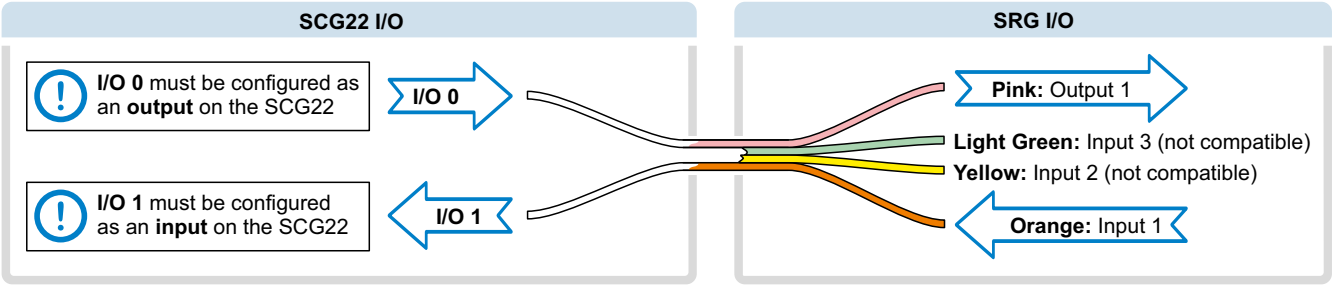

IMPORTANT! The output line electrical characteristics on an SRG are open drain and differ from the SCG22. Output lines on the SCG22 have an impedance value which may require modifications to be made to an existing installation. See the section "Hardware Characteristics for the I/O Lines" on page 25 for more details.

USB Programming Lead (300-02009)

The lead provides a USB slave connection for programming the SCG22.

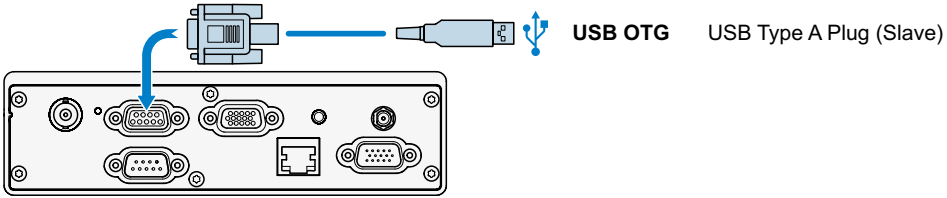

SCG Power/Ignition Lead (300-02010)

The lead provides power for the SCG22. An ignition sense wire is also provided for connection to the vehicle ignition system. For important information about installing and connecting the lead see the section "DC Supply Connection" on page 17.

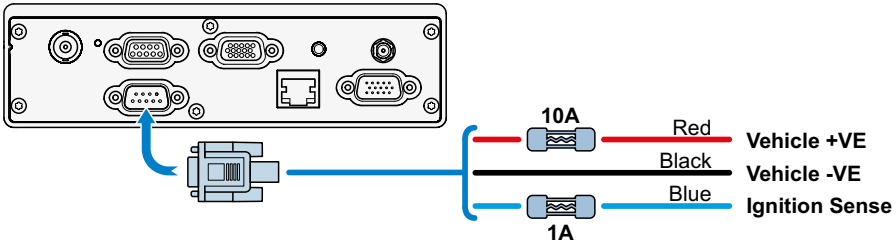

Loudspeaker and IO Connection Options

Different variants of Loudspeaker/IO leads are available to suit specific installation requirements. These include options for USB programming and connecting approved USB devices.

SCG Loudspeaker / IO Lead (300-02011)

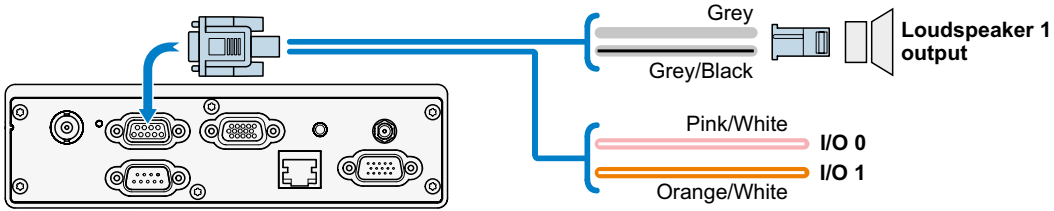

SCG Loudspeaker / IO USB Host Lead (300-02012)

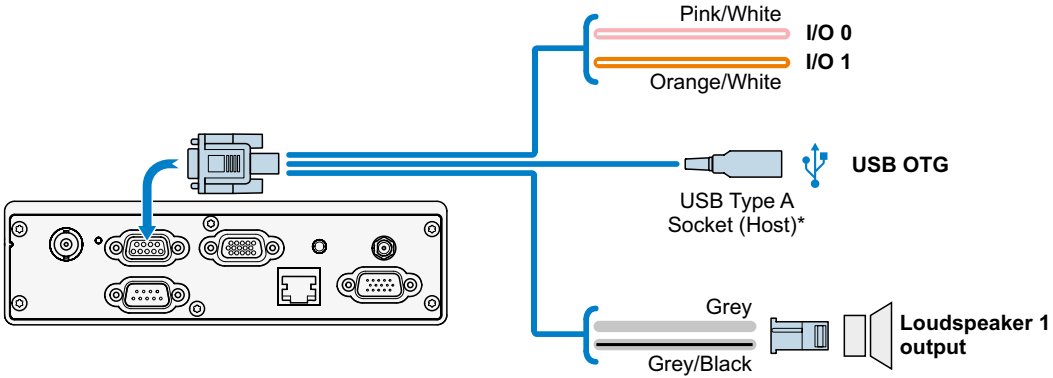

*USB 2.0 Full-Speed 12Mbps Host connector – Type A - provides power to devices (5VDC at 0.5A max).

SCG Loudspeaker / IO USB Slave Lead (300-02013)

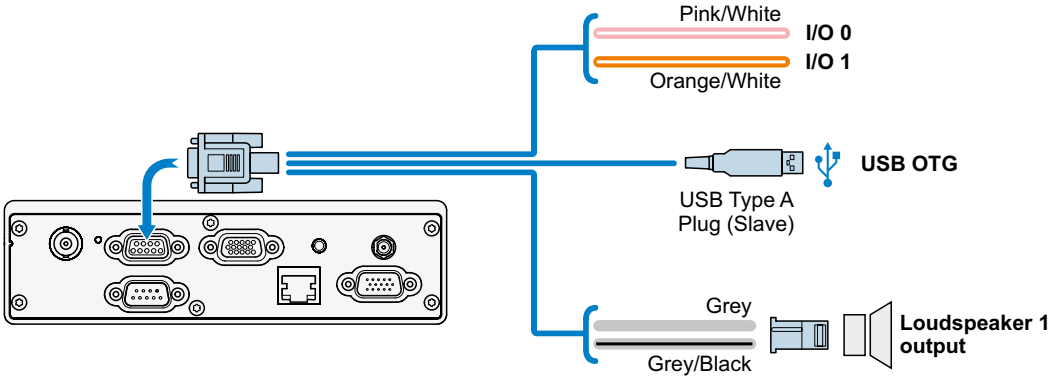

SCG Expansion Board Loudspeaker / 8 GPIO Lead (300-02014)

If the optional expansion board is fitted to the SCG22, an additional connector (I/O 2) provides connection for a second loudspeaker and 8 GPIO lines.

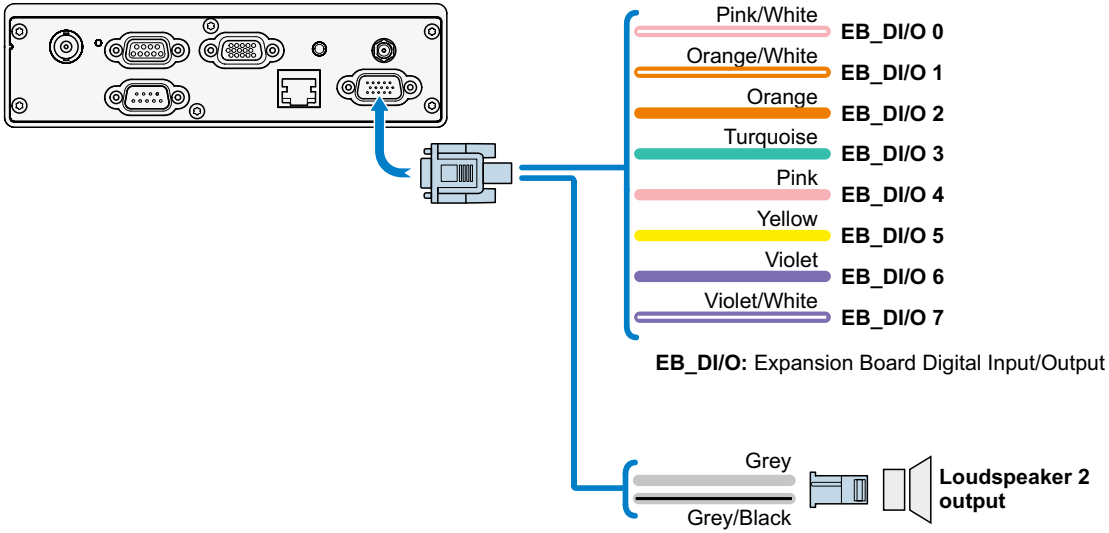

Programmable I/O

The SCG22 supports the following programmable digital I/O lines, depending on the variant:

GPIO 1 Connector	Two I/O lines available
GPIO 2 Connector	Eight I/O lines available

Each individual I/O line can be configured as either an input or an output, as required in the installation.

The following example functions may be allocated on the input lines:

- External Alarm Input
- External Input Triggered Status Messages
- Mute the loudspeaker
- Trigger the radio to switch stack
- Change talk group remotely

The following example functions may be allocated to an output line:

- External Alert Output
- Status Message Triggered External Outputs
- Switch on emergency vehicle lights
- Operate a vehicle horn or siren
- Open an automated gate or barrier

For details of how to program the functions refer to the Radio Manager documentation. For details of the signals and their characteristics, see the table in the next section.

WARNING! To control devices from the programmable outputs which require more than 0.5 A, use a suitable automotive relay to ensure correct operation. Connect the relay coil between the output wire and the vehicle positive supply. The device must be protected by an appropriate fuse in its positive supply. Check with the local regulatory authority where the outputs are used to drive external alert devices such as horns or sirens.

Hardware Characteristics for the I/O Lines

The following characteristics apply to all the individual I/O lines, dependent on whether they are configured as inputs or outputs:

Configuration	Performance
Input	• 22kΩ impedance • VIH min = 2.0V • VIL max = 0.8V • Protected against accidental application of external supply voltage, 15.6 V maximum • Assertion time: >100ms
Output	• 22kΩ in high impedance state • Max sink current = 500mA, active low • Max external voltage = 15.8V • Internally protected against inductive loads, and with a re-settable fuse • VOL max = 200mV @ 0.5A

LED Indicator

When power is applied to the SCG22 and it is running (booted up), the LED indicator on the rear panel illuminates red.

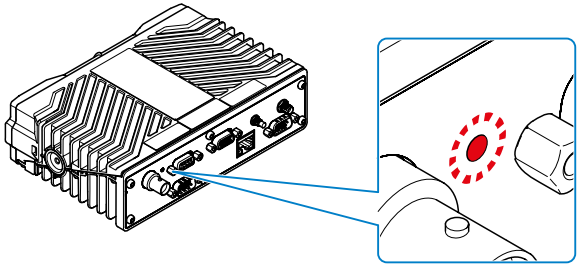

This is particularly useful in installations where the SCG22 is used without a console connected and there is no other visual indicator.

SCC3 Console

The SCG22 can accommodate up to two SCC3 consoles, or a combination of an SCC3 console and an HBC3 handset-based console.

WARNING! Before starting to install the SCC3 console, see the section "Installation Precautions" on page 3.

SCC3 Connections and Cabling

WARNING! Ensure that the transceiver is powered OFF before making any connections to the SCC3.

IMPORTANT! If the SCC3 is mounted directly to the SCG22 the internal connectors are not accessible.

The SCC3 has four internal connectors that are used to provide connection to the transceiver and accessories as shown:

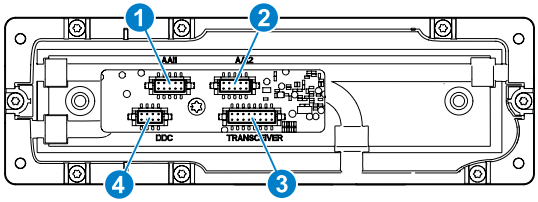

	Connector	Device
1	AAI1 (Audio Accessory Interface 1)	Remote Microphone and Switches OR Handset/Microphone
2	AAI2 (Audio Accessory Interface 2)	Handset/Microphone
3	TRANSCEIVER	SCG22
4	DDC (Dedicated Data Connector)	Mobile Data Terminal (MDT)

Cabling the SCC3

CAUTION! ESD precautions must be taken during replacement of the rear cover.

1. Connect the colour console cable into the connector marked TRANSCEIVER on the SCC3. Press the strain relief grommet into the recess in the channel. Connect the 16-way D-type connector to either the Console 1 connector on the rear panel, or the optional Console 2 connector on the front panel of the SCG22. See the section "Cabling and Connections Overview - All Models" on page 20.

   Note: If the SCC3 is being fitted with the DIN Mount Kit, proceed to the section "DIN Mount Kit" on page 29 for details on routing and securing the cables.

2. Connect all other accessories to the SCC3.
3. Route the cables through the channels on the internal moulding. Fit the split bung and the cable tie (supplied) around the cables (as shown). Tighten the cable tie behind the bung to secure the cables and allow slack at the 10-way plug termination.

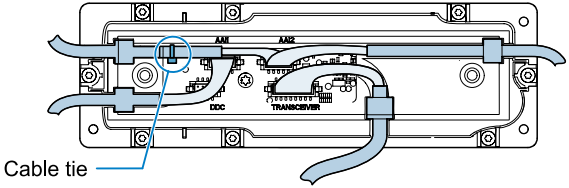

CAUTION! Cables must be dressed correctly using the channels to prevent damage. Press the cable bung into the recess in the channel. Fit the bungs provided into any unused channels.

Note: If a handset or fist-microphone accessory is used, the hands free kit must be plugged into the Audio Accessory Interface 1 connector (back left) to allow all cables to be routed correctly.

SCC3 Mounting Options

There are a number of options available for mounting the SCC3 console within the vehicle, including direct mounting onto the front panel of the SCG22 (see "Front Mounting the SCC3 Console" on page 11). This guide provides information on installing the SCC3 using the AMPS or DIN slot mount kits designed for in-vehicle use. Choose the best mounting option to suit the vehicle.

Note: For installations in marine environments, contact Sepura for available IP67 mounting options.

Dash Mounted Pivot Kit

CAUTION! The dash mount bracket must be fixed to a suitable and stable surface capable of bearing the weight of the SCC3.

The SCC3 is mounted into the desired position utilising the console dash mounted pivot kit. This kit consists of a dash mount bracket onto which the pivot support bracket is attached.

The SCC3 is then attached to the pivot support bracket.

Ensure orientation is correct for the viewing situation (tilt up or tilt down) and access is considered to the RS232 data connector, if required.

Fixing Hole Positions

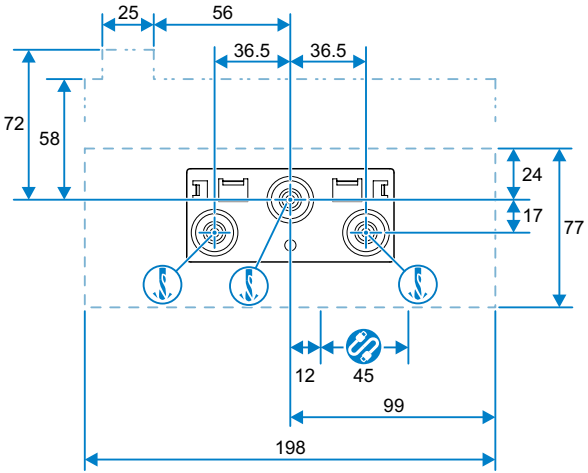

mm	All dimensions are in millimetres
	Extent of the SCC3 profile when orientated parallel to the mounting surface
	Extent of the SCC3 profile when orientated at 90° to the mounting surface
	Position of data connector - Allow for access to the connector if required
	Drill three holes at the fixing centres indicated to suit the fastener type (4.2 mm self-tapping screws supplied with the pivot mount kit)

Note: The SCC3 profile includes a small clearance allowance. Additional allowances should be made for cables depending on the installation configuration.

1. Secure the dash mount bracket into position using the three self-tapping screws provided.

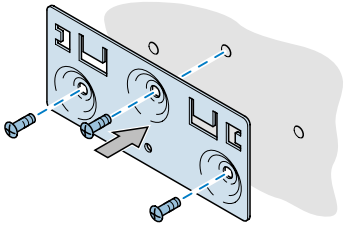

2. Make the cable connections to the SCC3. See the section "Cabling the SCC3" on page 26.
3. Fix the Pivot mount support bracket to the rear of the SCC3 using the two screws provided (maximum tightening torque = 0.8 Nm). Ensure that all cables are routed correctly and will not become trapped when the backplate is fitted.

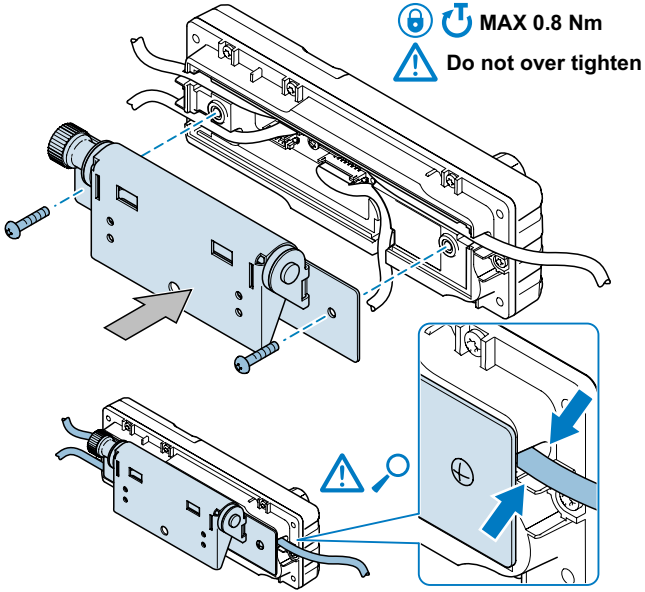

4. Slot the pivot mount support bracket into the dash mount bracket. Secure in place using the single fixed sprung screw knob.

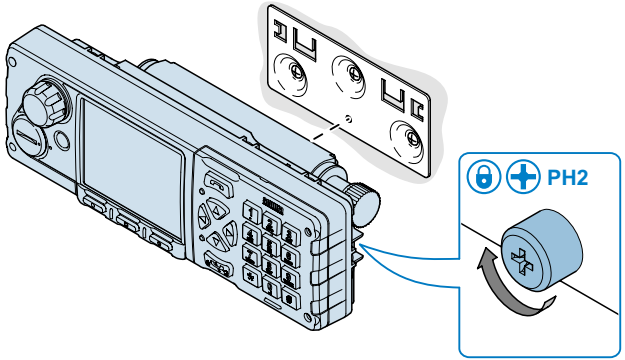

The viewing angle of the SCC3 can be adjusted by loosening the release knob until the tilt mechanism is free enough to move. A ratchet action provides incremental positioning. The release knob should then be re-tightened to fix the SCC3 into position.

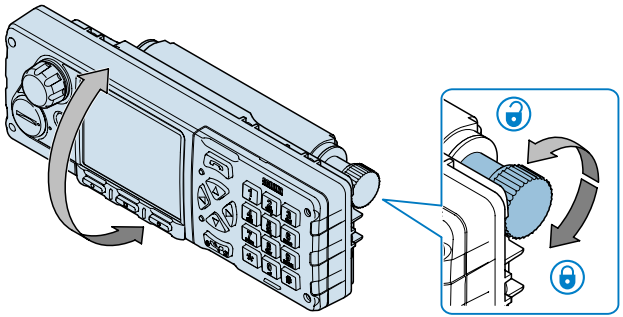

DIN Mount Kit

The SCC3 can be fitted into the vehicle using a DIN mount kit and DIN cage.

> **Note:** Ensure that the cabling to the SCC3 is made to the SCG22 before DIN mount installation.

Cabling to the SCC3 is completed when the cables are fed through the DIN cage and secured in the DIN mount.

1. Fit the DIN cage into the slot within the vehicle.

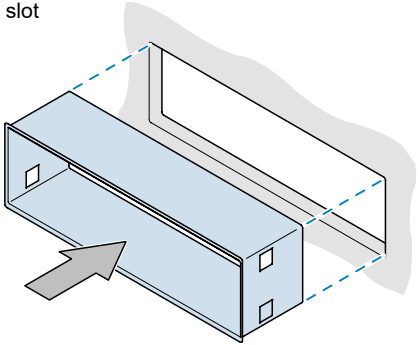

2. Feed the cables for the SCC3 through the DIN cage and DIN mount kit.

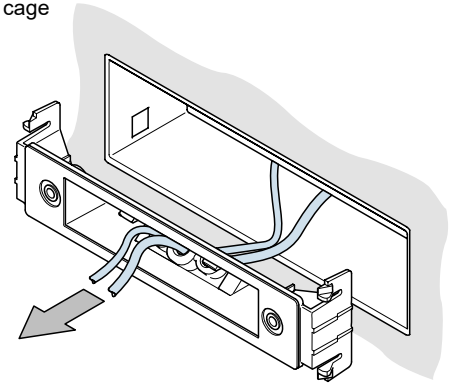

3. Feed the cables through the DIN mount and make the cable connections to the SCC3. See the section "Cabling the SCC3" on page 26.
4. Using the screws provided secure the DIN adapter to the SCC3 (maximum tightening torque = 0.8 Nm).

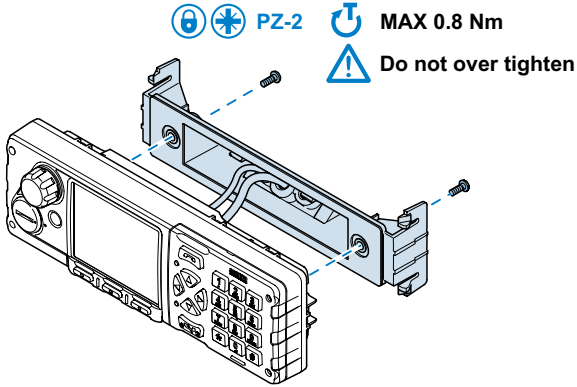

5. Fit the bungs provided into all cable channels in the SCC3 rear cover, as indicated.

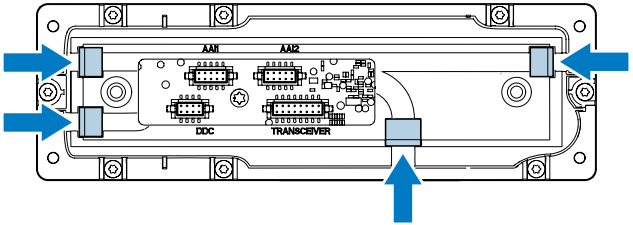

6. Route the cables neatly in the channels on the rear of the DIN adapter. Fit the seal bungs provided into any unused channels.

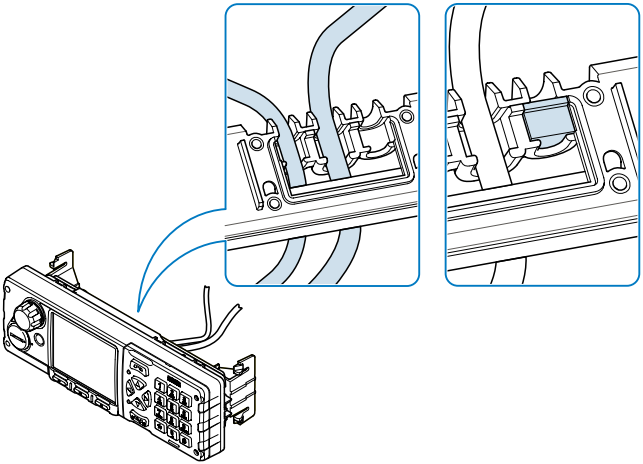

7. Fit the cable access cover over the cables and any seal bungs, using the screws provided.

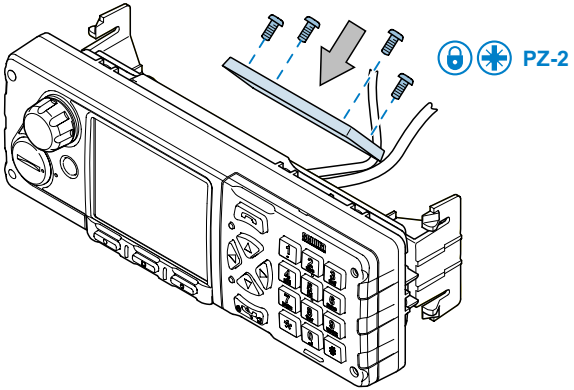

8. Push the assembly fully into the DIN cage.

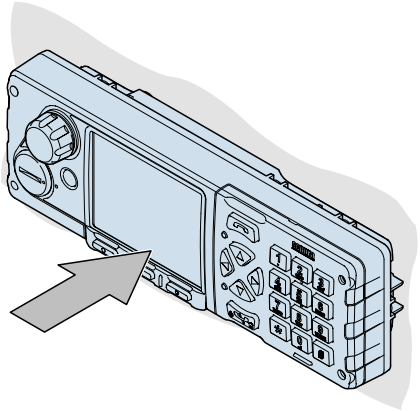

To remove, use the DIN release tools (provided)

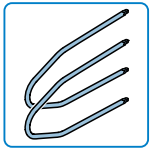

Din Mount Kit and IP55 Sealing

If required for the installation, the SCC3 can be further protected so that it is sealed against front water ingress to IP55 standards when mounted using the DIN mount kit.

> **CAUTION!** Ensure all seal bungs have been fitted into unused channels on the SCC3 and mount kit, and that the appropriate sizes have been used. Seal bungs have a raised profile on their upper surface. When fitting, ensure that the position of its raised profile matches that of the moulded profile on either side of the channel being blocked.

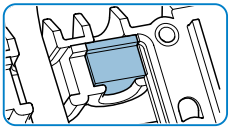

1. Apply silicone sealant* to the occupied seal bung slots in the assembly. We recommend that you use a small diameter nozzle. Apply enough sealant to each slot to ensure that all the external rubber/plastic boundaries are protected.

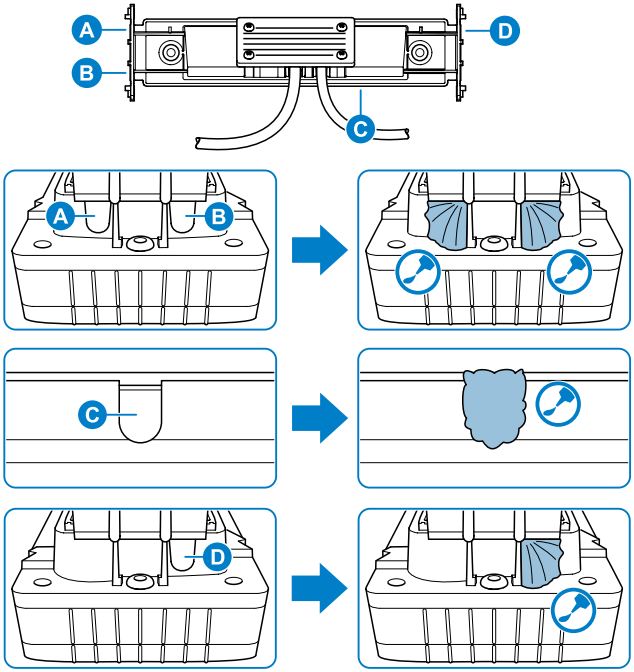

2. Place the assembly face-down on a flat surface until the sealant is dry.

*DOWSIL™/Dow Corning® 7091 Silicone Sealant is recommended.

AMPS Mounting Options

The SCC3 can be fitted into the vehicle using a range of AMPS mounts available to suit installation requirements.

1. Feed any cables required to the SCC3 and connect them as shown in the section "Cabling the SCC3" on page 26.
2. Using the screws supplied, secure the AMPS backplate to the SCC3 (maximum tightening torque = 0.8 Nm). Ensure all cables are routed correctly and will not be trapped when the backplate is fitted.

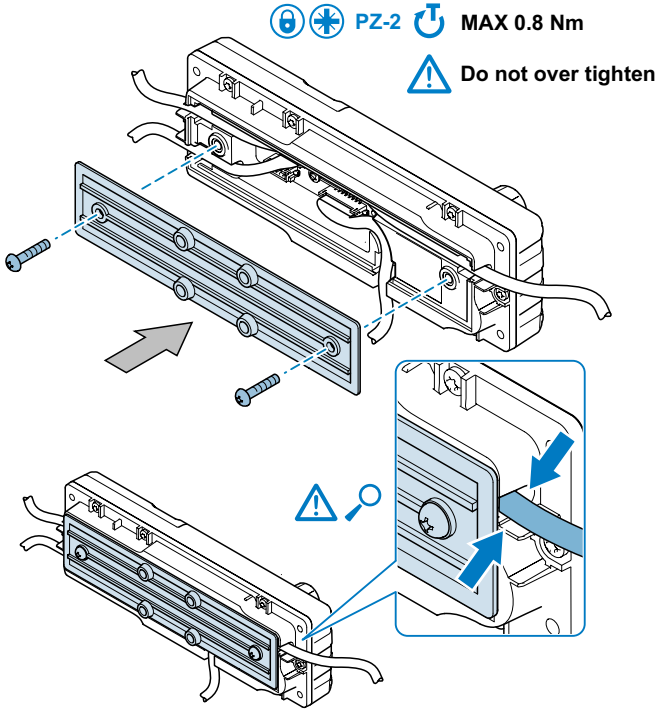

AMPS Ratchet Hinge Mount

The optional Ratchet Hinge Mount secures the SCC3 to the vehicles interior and provides viewing angle adjustment in the vertical plane.

1. Fit one half of the AMPS bracket to the AMPS backplate on the rear of the SCC3, using the screws and washers provided. Fit the optional p-clip to one of the mounting points, routing any cables through from the SCC3.

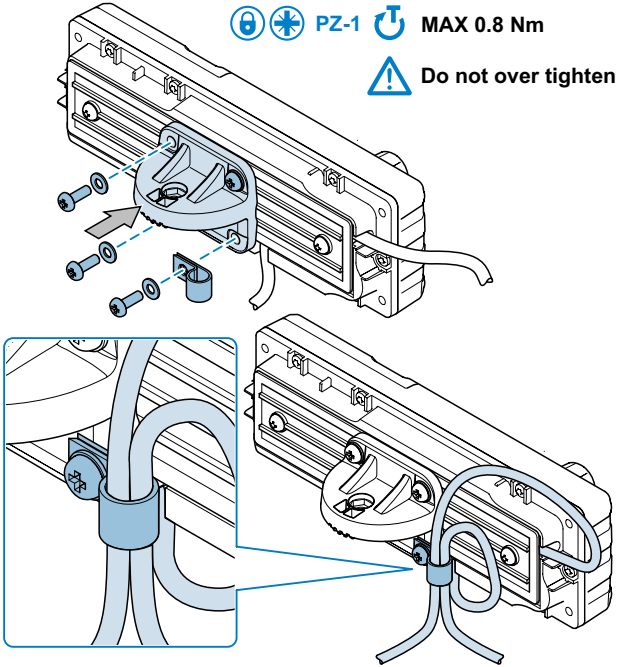

CAUTION! Allow sufficient slack in the cables for hinge adjustments.

2. Fit the other half of the bracket into position using four screws.

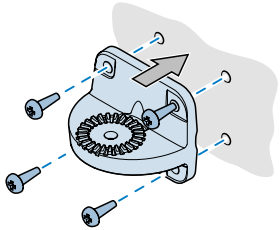

CAUTION! Ensure fixing screws are of an appropriate type and length for the surface material the bracket is being mounted on to.

3. Fit the two brackets together using the screw and nut provided. Before fully tightening, adjust the SCC3 to the desired angle.

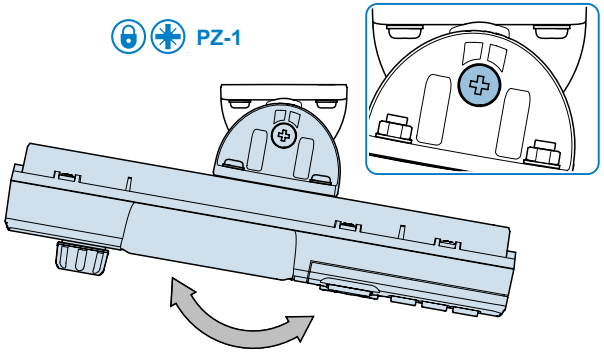

AMPS Ball Mount

The optional ball mount provides flexible mounting options for the SCC3 when used in conjunction with the range of compatible mounting arms and brackets.

1. Fit the AMPS ball mount to the AMPS backplate on the rear of the SCC3 using suitable screws and washers. Fit the optional p-clip to one of the mounting points, routing any cables through from the SCC3.

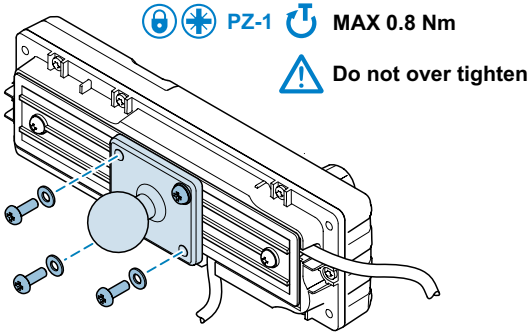

2. Fit a compatible mounting kit to the ball mount, such as a double socket arm. Ensure any mounting components are fully tightened after adjustments.

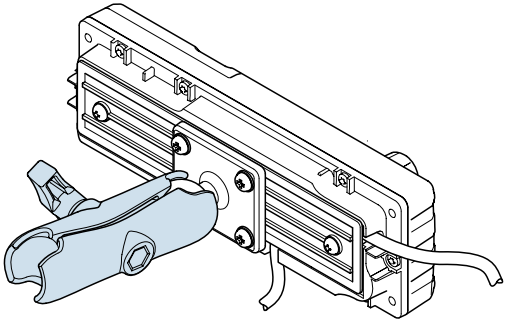

Handset-Based Console (HBC3)

The HBC3 is supplied with a magnetic mounting bracket and interface box. The bracket can be mounted separately or on the box.

CAUTION! The interface box is not sealed. Avoid positions with risk of exposure to water or dust entry.

CAUTION! ESD precautions must be taken during replacement of the rear cover.

1. Open the interface box by removing the three screws from the cover of the box.

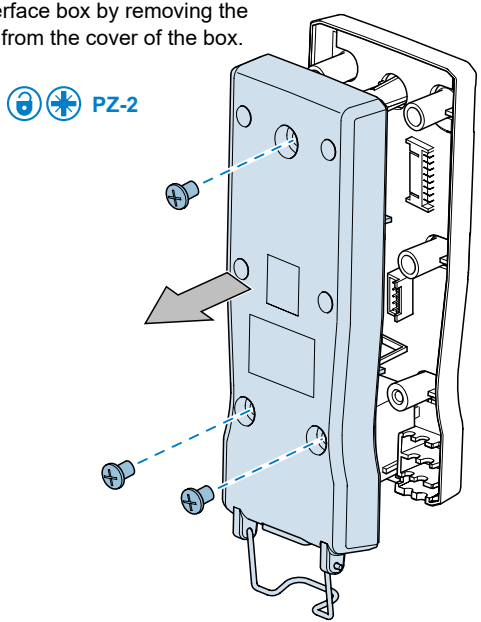

2. Connect the transceiver to the 16-way header in the interface box using a Remote Console cable. Ensure that the strain relief bung is seated at the cable entry in the box front with the flat face down.

3. Press the inner wires of the Remote Console cable into the clips on the PCB.

> **Note:** Before fitting the optional remote microphone and switches cable see the section "Remote Microphone and Switches Installation" on page 35.

4. Connect the optional remote microphone and switches cable into the 10-way connector. Route the cables neatly through the cable entry points.

> **CAUTION!** Take care not to damage fine wiring or trap any cables.

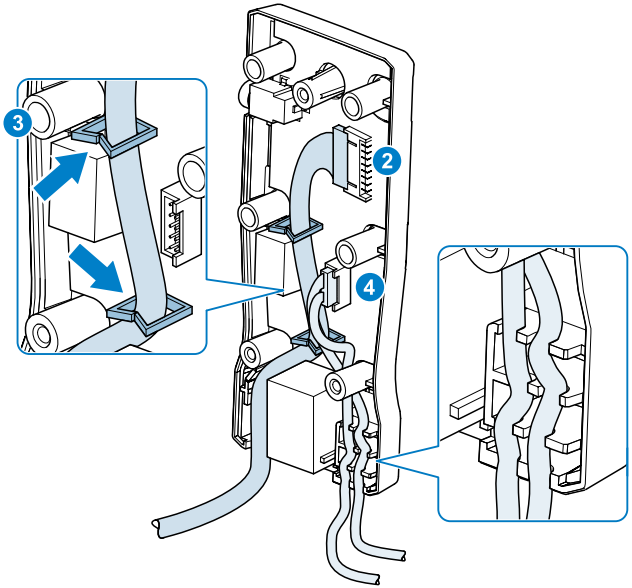

5. Screw the box halves back together securely (Max torque 0.3Nm), ensuring any cables are fitted correctly through the cable entry points.

6. Plug the HBC3 into the interface box through the retaining clip and fold the clip back over the connector body to retain it securely in position.

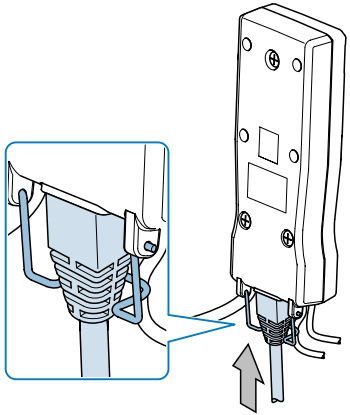

7. Fit the mounting bracket to the vehicle dash in a suitable location or directly to the interface box. Place the handset in the mounting bracket with the display facing the user.

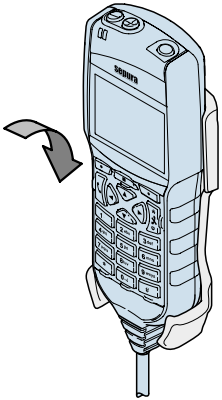

Configuring the HBC3

The HBC3 can be configured for either Handset mode or Fist Mic mode as part of the installation. Configuration is done when powering on the handset, whilst pressing and holding the PTT and Navi-keys as described below. The mode persists even if the power supply is disconnected.

To power on the handset:

HBC3	Press and hold the **Cancel/Home** key until the green LED illuminates, and then release

To configure a mode:

Handset Mode	Press and hold the **PTT** and the **– Navi-key** whilst powering up. After the LED flashes green twice (Handset Mode), release the **PTT** and **Navi-key**
Fist Mic. Mode	Press and hold the **PTT** and the **+ Navi-key** whilst powering up. After the LED flashes blue twice (Fist Mic Mode), release the **PTT** and the **+ Navi-key**

Fist Microphone/Handset

The Fist microphone and/or Handset should be located centrally for the operator(s) to access, using the screws provided. Ensure that the cables are placed in the rear of the SCC3 so that the grommets seal correctly. Specific accessories attach to the Vehicle Accessory Connector (VAC). These should be used when mounting in a DIN slot.

> **Note:** If replacing a rear connecting handset with a front connecting handset, also replace the magnetic hook rest with the one supplied.

Multiple Fist Microphones and/or Handsets may be connected in an installation, which may be connected to either audio accessory interface.

Remote Microphone and Switches Installation

It is recommended that the microphone is located away from any wind noise in a position suitable for the user, such as near the internal rear view mirror.

The switch unit should also be located centrally for the user to access. A self-adhesive hook and loop pad is provided for mounting the remote PTT on a flat surface, such as the dashboard.

Only one hands free microphone can be used in an installation, which can be connected to either audio accessory interface socket on the rear panel of the SCC3.

See the section "SCC3 Connections and Cabling" on page 26.

Connector Wiring Terminations

The remote microphone is supplied unterminated for ease of installation. Terminate to the SCC3 as shown below after the switch unit and microphone are positioned.

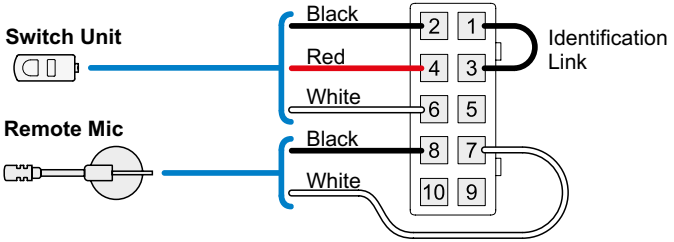

When used in conjunction with the HBC3, the soft key of the remote microphone and switches accessory is only operational with the interface box revision 2.0 or later.

To enable it with the revision 1.0 interface box, an additional shorting link must be added between pins 4 and 6.

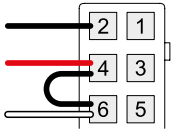

The revision of the interface box is indicated by the fourth digit of the serial number on the product label.

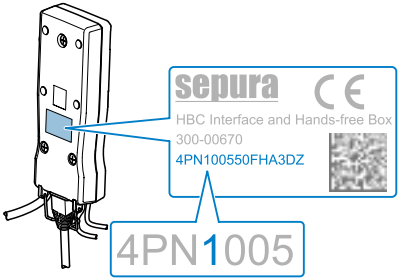

Programming/Customising the SCG22

Before re-programming or customising the internal software in the SCG22 you will need the following items:

- Radio Manager 2
- Power connection to the SCG22

Connect one of the power lead options to the Power/Ignition connector on the rear panel of the SCG22. The red and black wires in the power lead should be connected to a suitable power supply set to 12 V nominal with a rating of 5 A. Connect the blue ignition wire in the power lead to the positive terminal on the power supply. All other wires may be left unconnected. For more information see the section "DC Supply Connection" on page 17.

Programming

> **IMPORTANT!** Only use the USB Programming Lead to program the SCG22. Programming is not supported by using a serial connection.

Two lead variants are available to program the SCG22:

- USB Programming Lead (300-02009)
- SCG Loudspeaker / IO USB Slave Lead (300-02013)

Connect the lead to the GPIO1 Connector on the rear panel of the SCG22 and a spare USB socket on the PC running Radio Manager.

Customising

To customise the SCG22, use either a:

- **USB connection**: Described above for programming
- **Serial connection**: Connect to the PC com port via the Dedicated Data Cable (DDC) from the rear panel of the SCC3 or to a USB port using the USB Data Cable from the Front Accessory Connector (VAC).

Connecting a Remote SIM Reader

To install an optional Remote SIM Reader, connect the device to the console 1 connector on the rear panel of the SCG22 using a remote console cable not exceeding 7m in length.

If a console is connected to the console 1 connector, connect a Console Interface Box (part no. 300-00221) between the SCG22 and the console using remote console cables.

Ensure that the combined cable lengths from the SCG22 to the Remote SIM Reader/console does not exceed 7m.

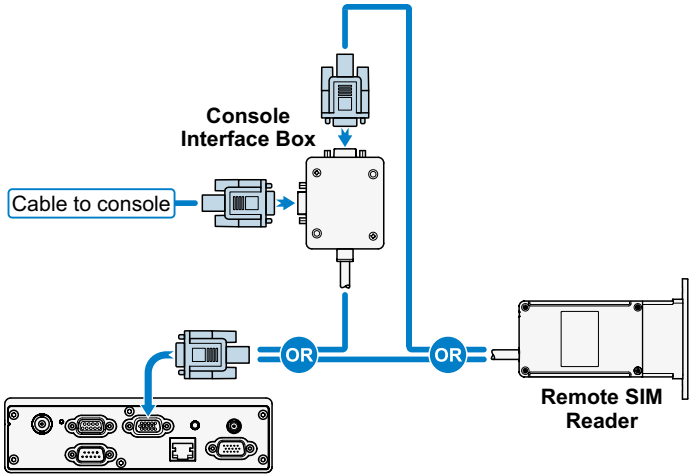

Mobile Data Terminal

This guide does not include specific details about installing with a Mobile Data terminal (MDT). However, connect the MDT to the 8-way Dedicated Data Connector (DDC) in the SCC3 using a DDC PEI Tail and Data Lead or to the Vehicle Accessory Connector (VAC) on the front of the SCC3 using a USB Data Cable.

Alternatively, connect to a spare 15-way interface on the transceiver using a Data Lead. If a spare 15-way interface is not available, connect a Console Interface Box (part no. 300-00221) between the SCG22 and the SCC3 using remote console cables not exceeding 10m in total length. Connect the MDT to the spare 15-way connector on the interface box.

Technical Information

Physical Data

Standard option:

Dimensions: .....179mm x 50mm x 116mm

Weight 938g

Electrical Data

Input Voltage Range:..... 10.8 - 15.6V DC

Nominal Input Voltage ..... 12V DC

Rated Power: 90W

RF Data

RF Power .....Class 2

Frequency Bands ..... 380 - 470MHz

Environmental Data

Operating Temperature (min./max.) .....-30°C to +70°C

Operational temperature (conformance tested) .....-20°C to +55°C

Storage Temperature .....-40°C to +85°C

Maximum Altitude Limit 6000m

Sepura Limited
9000 Cambridge Research Park
Beach Drive, Waterbeach
CAMBRIDGE
CB25 9TL. UK.
T: +44 (0)1223 876000

www.sepura.com

SPR-DOC-04384 Issue 7