Intellian

OW130L-Dac

OneWeb LEO User Terminal

Installation & Operation User Guide

Serial number of the product

This serial number will be required for all troubleshooting or service inquiries.

© 2023 Intellian Technologies, Inc. All rights reserved. Intellian and the Intellian logo are trademarks of Intellian Technologies, Inc., registered in the U.S. and other countries. The OW130L-Dac is a trademark of Intellian Technologies, Inc. Intellian may have patents, patent applications, trademarks, copyrights, or other intellectual property rights covering subject matter in this document. Except as expressly provided in any written license agreement from Intellian, the furnishing of this document does not give you any license to these patents, trademarks, copyrights, or other intellectual property. All other logos, trademarks, and registered trademarks are the property of their respective owners. Information in this document is subject to change without notice. Every effort has been made to ensure that the information in this manual is accurate. Intellian is not responsible for printing or clerical errors.

Disclaimer

The information in this user guide is subject to change without prior notice out the product life cycle. The printed version of the guide is periodically updated, but it may contain inaccuracies or omissions compared to the most recent product information. The most up-to-date information is always available on our website at intelliantech.com.

Doc. No. UG-KL4003-V1.0

Table of Contents

Chapter 1. Precautions 7
1.1 Warnings, Cautions, and Notes 7
1.2 General Precautions 8

Chapter 2. Introduction 9
2.1 Introduction to OW130L-Dac 9
2.2 OW130L-Dac Features 9

Chapter 3. Planning Installation 10
3.1 Installation Precautions 10
3.2 Selecting Installation Site 10
3.2.1 Installation Location for Antenna 10
3.2.2 Installation Location for CNX 10
3.2.3 Minimizing Satellite Blockage 11
3.2.4 RF Hazard Precautions 12
3.3 System Package 13
3.3.1 Outdoor Unit (ODU) 13
3.3.2 Customer Network Exchange (CNX) 13
3.3.3 Packing List 14
3.4 System Cables 15
3.4.1 Primary Antenna Power+Data Cable 15
3.4.2 Dual Antenna Connection Cable 15
3.4.3 AC Power Cables (Customer Supplied, Only for Heater Module) 16
3.5 Installer/Customer Furnished Equipment 16
3.6 Unpacking System Package 17

Chapter 4. Installing Outdoor Unit (ODU) 19
4.1 General Requirements 19
4.1.1 Antenna Mounting Requirements 19
4.2 Antenna Dimensions 20
4.3 Installing in the Vicinity of Cellular Communications Towers 21
4.4 Measuring the North point 22
4.5 Designing Pole Mount 24
4.5.1 Assembling Base Panel of NPM (Non-Penetrating Mount) 24
4.5.2 Installing Customized Pole Mount 29
4.6 Placing Antenna on Fine Tune assembly 31
4.6.1 Assembling the Fine Tune assembly 31
4.6.2 Levelling the Mounting Plate 32
4.7 Removing Antenna from Wooden Pallet 34
4.8 Mounting Antenna on Mounting Plate 35
4.8.1 Moving Antenna Above the Mounting Plate 35
4.8.2 Installing Bolts for Antenna-Mounting Plate Assembly 35
4.8.3 Aligning the Antenna to the True North 37
4.8.4 Placing Concrete Blocks on Base Panels 38

4.9 Removing the Radome Bracket 38
4.10 Removing the Shipping Brackets 39
4.10.1 Opening Radome Hatch 39
4.10.2 Removing the Shipping Brackets and Cable Ties 39
4.10.3 Closing Radome Hatch 40
4.11 Connecting Cable to Antenna 41
4.11.1 Connecting Cable to Primary Antenna 41
4.11.2 Connecting Primary Antenna to Secondary Antenna 42
4.12 Connecting power cable for Heating Module (Optional) 43
4.12.1 Opening Radome Hatch 43
4.12.2 Connecting the Power Cables for Heating Module 44
4.12.3 Closing Radome Hatch 45
4.13 Grounding Antenna 45

Chapter 5. Installing Indoor Unit (IDU) 46
5.1 CNX Dimensions 46
5.2 Antenna System Configuration 47
5.3 CNX Cable Connection 49
5.3.1 CNX Back Panel Connectors 49
5.3.2 CNX Connector Pinout Guide 49

Chapter 6. Operating CNX 51
6.1 CNX Front Panel View 51

Chapter 7. Using Local User Interface (LUI) 52
7.1 Introduction 52
7.2 Requirements to Access OneWeb Web Interface 52
7.3 Turning On System 53
7.4 Accessing Webpage 53
7.4.1 TCP/IP Connection through LAN Port 53
7.5 Webpage Layout 54
7.5.1 Navigation bar 54
7.5.2 Home Page 55
7.5.3 Footer 55
7.6 Setting Up Cable and Antenna 56
7.6.1 RF Cable Setup 56
7.6.2 TILT Calibration 56
7.6.3 Antenna Setup 57
7.7 Starting Install Menu (Install Wizard) 58
7.7.1 Installation Navigation 58
7.7.2 Initial Install Page 58
7.7.3 Upload Software Bundle 59
7.7.4 New Software Listing 59
7.7.5 Upload Ephemeris Data 60
7.7.6 Antenna Levelling 60
7.7.7 Autonomous States 61

Chapter 8. Specification 62
8.1 Technical Specification 62
8.1.1 RF Specification 62
8.1.2 System Specification 62
8.1.3 Mechanical Specification 64
8.1.4 Environmental Specification 64
Chapter 9. Warranty 65
Chapter 10. Appendix 66
10.1 Pre-Installation Checklist 66
10.2 Tightening Torque Specification 67
10.3 Using a lifting strap 68
10.4 Checking separately sold items 69
10.5 Important Notice of Waterproofing Connector 70
10.5.1 Introduction 70
10.5.2 Outline of Taping 70
10.5.3 Procedure 70
10.6 Certifications 71

List of Figures

Chapter 3. Planning Installation 10

Figure 1: Minimizing Satellite Blockage (example) 11
Figure 2: Radomes and Pedestal 13
Figure 3: Customer Network Exchange (CNX) 13

Chapter 4. Installing Outdoor Unit (ODU) 19

Figure 4: Antenna Dimension 20
Figure 5: Compensation angle of NPM UT mount plate relative to the Ground 31
Figure 6: Placing Concrete Blocks on Base Panel of NPM 37
Figure 7: Opening Radome Hatch 38
Figure 8: Removing the AZ Shipping Bracket 38
Figure 9: Removing the CL Shipping Foam 39
Figure 10: Removing the EL Shipping Bracket 39
Figure 11: Cable Connection of CNX to Antenna 40
Figure 12: Cable Connection Between Two Antennas 41
Figure 13: Cable Connections for Heating module 42
Figure 14: Opening Radome Hatch 42
Figure 15: Inserting Cables Through Cable Glands 43
Figure 16: Connecting Power Cable for Heating module to Terminal Block 43
Figure 17: Grounding Antenna 44

Chapter 5. Installing Indoor Unit (IDU) 45

Figure 18: CNX Dimensions 45
Figure 19: Dual Antenna System Configuration of OW130L-Dac (Standard) 46
Figure 20: Dual Antenna System Configuration of OW130LH-Dac (w/ Heating Module) 47
Figure 21: Back Panel Connectors 48

Chapter 6. Operating CNX 50

Figure 22: Front Panel View of CNX 50

Chapter 7. Using Local User Interface (LUI) 51

Figure 23: Back Panel LAN Port Connection 52

Chapter 1. Precautions

Prior to installation, read this Installation Guide carefully including the safety warnings and information. Failure to do so could result in serious injury or inoperability of the terminal.

Antenna installation must be provided by a suitably trained professional installation technician or by a qualified antenna installation service. Installation is not to be attempted by someone not trained or experienced in this type of work.

1.1 Warnings, Cautions, and Notes

WARNING, CAUTION, and NOTE statements are used throughout this manual to emphasize important and critical information. You must read these statements to help ensure safety and to prevent product damage. The statements are defined below.

	WARNING WARNING indicates a potentially hazardous situation that if not avoided, could result in death or serious injury.
	CAUTION CAUTION indicates a potentially hazardous situation that if not avoided, could result in minor or moderate injury or damage to equipment. It may also be used to alert users about unsafe practices.
	NOTE A NOTE statement is used to notify people of installation, operation, programming, or maintenance information that is important, but not hazard-related.

1.2 General Precautions

Before you use the antenna, make sure that you have read and understood all safety requirements.

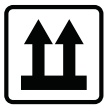	THIS WAY UP • Place the boxes/crates on the floor with the arrow pointing up.
	FRAGILE • Since the Radome is fragile, handle it with care. Do not apply excessive pressure or shock. These may cause surface cracking or other damage.
	KEEP DRY • Always make sure the antenna is stored on a dry floor. • The antenna can withstand ordinary rain. However, water resistance cannot be guaranteed if submerged. • Keep the antenna in a dry place with sufficient ventilation. Do not store the antenna wrapped in a tarp, tent, vinyl, and others.

* **DO NOT SHIP VIA RAIL:** Ensure not to ship any system via rail**.**

- Before you begin a site installation, check the appropriate electrical code requirements and with other regulations governing this kind of installation within the country of use.
- When installing, replacing, or disconnecting any cable components, make sure that each exposed metal connector of the antenna is grounded firmly before the work.
- The outdoor antenna and antenna cables are electrical conductors so transients or electrostatic discharges may occur at the antenna during thunderstorms. If the antenna is not installed properly, the electronic equipment may be damage and/or cause personal injury or death to persons touching the exposed metal connectors of the electronic equipment.
- Avoid installing antenna near high voltage overhead cables or similar.
- Do not climb the pole during a thunderstorm or in windy, wet, icy, or snowy conditions.
- Do not touch antennas, surge arrestors, or antenna cables during a thunderstorm.
- ODU (Outdoor Unit) must be properly mounted and secured to the pole. Failure to do so could result in detachment of the unit, causing disruption in the unit’s operation or could result in the unit falling, which could cause serious injury or death.
- When installing the antenna, remember the following;
  - DO NOT use a metal ladder.
  - DO dress properly: wear rubber gloves, shoes with rubber soles and heels, and a long sleeve shirt or jacket.

Chapter 2. Introduction

2.1 Introduction to OW130L-Dac

The OW130L-Dac is a fully functional Land fixed OneWeb user terminal which performs a 18.2 dB/K minimum G/T with 125 cm reflector. The terminal consists of a pair of antennas for seamless handover from one satellite to the next satellite.

The OW130L-Dac is designed for residential and corporate broadband or Government uses. Additionally, The UT is simple to install, commission, and operate with automated setup functions. Once completed, users can expect a reliable, high-quality, high-speed, low-latency service with minimal intervention.

2.2 OW130L-Dac Features

- LEO satellite pointing and tracking algorithm.
- 3-axis stabilization platform with motion drift compensation solutions.
- Fully sealed to protect against the outdoor environment.
- Dual-dome operation for seamless connectivity.
- Simple and suitable industrial design for professional installation.
- Wideband GNSS antenna improves location precision.
- Remote monitoring, diagnostics and troubleshooting to resolve issues on site, which is made to the end user via a local management interface.
- Ability to store multiple software versions to fallback to a known good or factory version in case of errors in the current working version of software

Chapter 3. Planning Installation

CAUTION

Be sure to complete the pre-installation checklist before you begin installing the antenna. Refer to **"10.2 Tightening Torque Specification" on page 67**

3.1 Installation Precautions

The User Terminal installation requires extreme precaution and safety measures given the installation environment. Failure to follow the correct installation process may lead to injury of the installer and/or cause damage to the system. To maximize the performance of the system, a thorough review of this installation guide is strongly recommended. In addition, you should execute the installation process as it is noted in this manual.

To ensure your own safety and convenience of installation, note the following precautions.

- Review the general safety precautions in the Safety Precautions chapter.
- Familiarize yourself with the antenna and the mounting instructions prior to climbing any roof or ladder.
- Verify that all safety measures for outdoor or rooftop installation are in place.
- Verify all requirements before beginning the actual installation to determine if the equipment and necessary items are available and functioning properly.
- Install the grounding system for the antenna support structure, radio hardware, and surge arrestor before connecting the cable from the equipment to the surge arrestor. This protects the system against lightning strikes during installation.

3.2 Selecting Installation Site

Before installing the antenna system, consider the best place to position the antenna for both performance and safety.

3.2.1 Installation Location for Antenna

The antenna should be placed in an area with no RF signal blockage. A safe mounting place and a restricted access location should be selected.

When the antenna is transmitting, obstacles in way of the beam path will decrease the satellite signal strength and interrupt the connection. The antenna unit should have direct line-of-sight within 59 degrees from zenith (or above 31 degrees of elevation from local horizon at all directions) without any obstacles in the beam path.

3.2.2 Installation Location for CNX

An ideal location for the CNX should be:

- Within 100 m (300 ft) of the antennas
- In a dry, cool, and ventilated location
- Close to a power source

3.2.3 Minimizing Satellite Blockage

The ideal antenna site should have a clear view of the horizon or of the satellite with all-around clearance. Some examples of obstacles you must avoid for the directional antenna to operate effectively are: neighbouring buildings, trees, or other obstructions and power lines. To minimize the influence of obstacles, signal interference, or reflections, note the following guidelines:

- Avoid trees in the signal path. Seasonal changes such as leaves or hanging icicles can impact signal absorption. Mount the antenna as high as possible above the ground to free up space. In open areas, the ground is the actual surface of the earth.
- To use the basic antenna system you need to install two antennas. Intellian recommended Installing the antenna at least 2.6 m (8.5 ft) away from the other antenna.
- Make sure there are no obstacles within 59 degrees from Zenith. Obstacles can interrupt the satellite signal transmission and reception of the antenna.

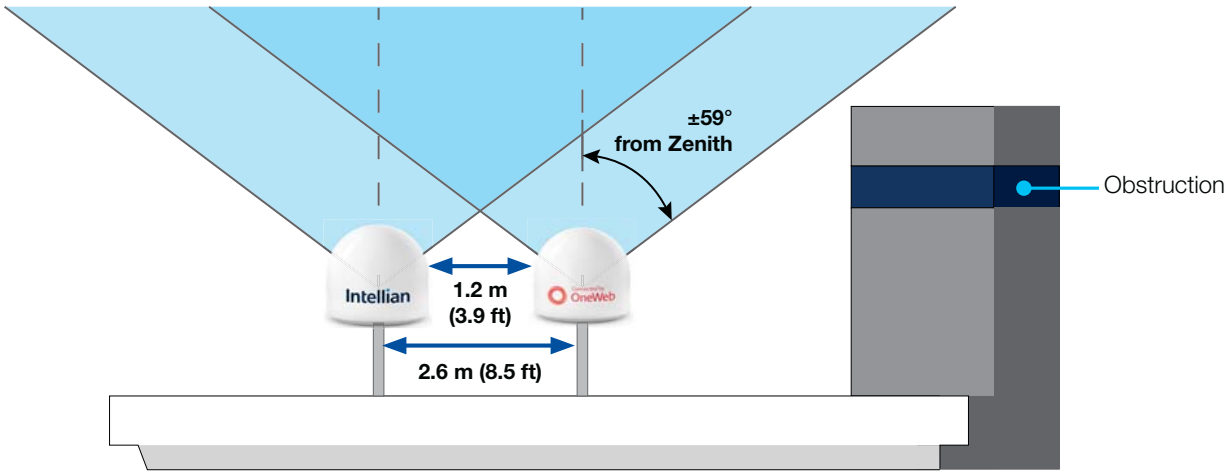

Figure 1: Minimizing Satellite Blockage (example)

3.2.4 RF Hazard Precautions

The Federal Communications Commission has adopted a safety standard for human exposure to RF (Radio Frequency) energy, which is below the OSHA (Occupational Safety and Health Act) limits. To comply with current FCC RF Exposure limits, the antenna must be installed at or exceeding the minimum safe distance as guided by the antenna manufacturer or supplier.

RF exposure distance is calculated based on current FCC RF Exposure rules. OW130L safe distance is no distance limit as not exceeding 1 mW/cm2.

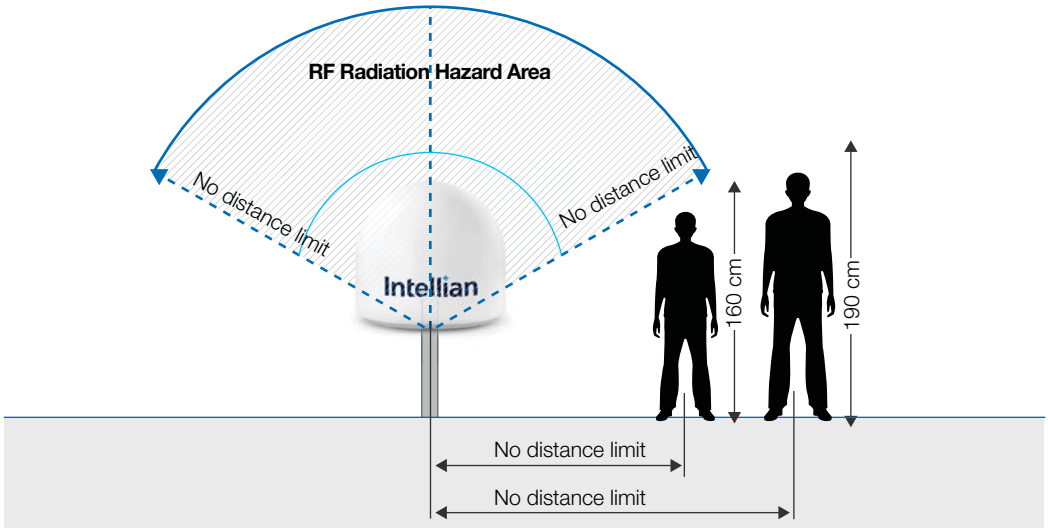

3.3 System Package

3.3.1 Outdoor Unit (ODU)

The OW130L-Dac operates in a dual parabolic primary and secondary configuration. Each terminal consists of a pedestal, a reflector, RF modules and antenna control modules which are enclosed in a radome.

- Pedestal: 3-axial stabilized platform for the position compensation of the antennas
- RF modules: the antenna consists of a reflector, OMT, feeder and RCM which converts the satellite signals into the IF bands and up-converts IF bands to the forward-link satellite signals. The primary antenna includes the modem module, called SSM, which implements the necessary functionality to transmit and receive signals as well as communicate and command pointing directions to the antenna.
- Control modules: the antenna interface module, called AIM, controls the antenna motion by interfacing with the modem and RF modules.
- Radome: protects the antenna from outdoor environment.

Figure 2: Radomes and Pedestal

3.3.2 Customer Network Exchange (CNX)

The Customer Network Exchange (CNX) must be installed in a weather-protected area. It interfaces with user equipment and provides power and data interconnection to the outdoor unit. The CNX connects to primary antenna while providing secure GigE connection to the Baseband Unit. The CNX takes 56 V input but can vary by product variant.

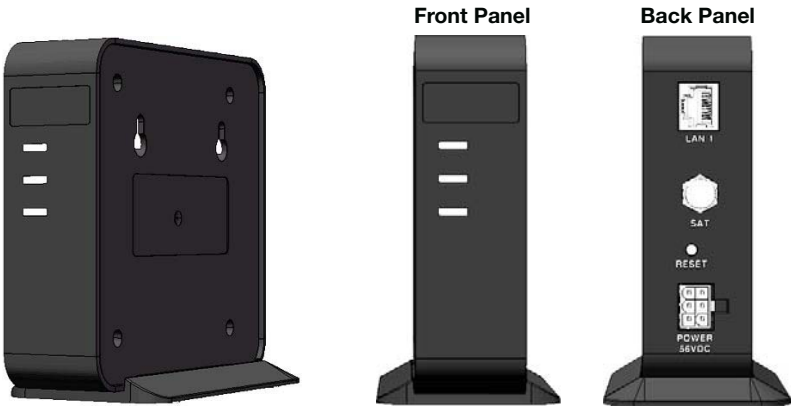

Figure 3: Customer Network Exchange (CNX)

3.3.3 Packing List

Before beginning installation, make sure you have all the included components.

The User Terminal (UT) is composed of the following components.

OW130L-Dac Packing List

Primary Antenna Package (Box 1)			
Item	**Q'ty**	**Size**	**Description**
Primary Antenna Unit	1		Primary User Terminal
Quick Installation Guide (QIG)	1		Installation Manual
Customer Network Exchange (CNX)	1	219 mm x 185 mm x 50 mm	To access to OneWeb services
RG-6 Coaxial Cable F(M) - F(M)	1	30 m	Coaxial Cable F(M)-F(M) for CNX Power & Data Connection
AC-DC Power Adaptor for CNX	1		To convert AC 100-240V Power to DC +56V Power for CNX (250W)
AC Power Cord (USA)	1	1.5 m	AC Power Cord (110 V)
AC Power Cord (CEEE7/7)	1	1.5 m	AC Power Cord (220 V)
Hex Bolt	5	M12x80L	Spare Bolt Kit for Mast Assembly
Flat Washer	5	M12	
Spring Washer	5	M12	
Door Key	2		For Hatch door
Secondary Antenna Package (Box 2)			
Item	**Q'ty**	**Size**	**Description**
Secondary Antenna Unit	1		Secondary User Terminal
TX cable (LMR400)	1	5 m	For inter-dome RF Tx connection
RX cable (LMR400)	1	5 m	For inter-dome RF Rx connection
Ethernet Cable (CAT 5)	1	5 m	For inter-dome Ethernet connection
Signal Cable (CAT 5)	1	5 m	For inter-dome control signal connection
Hex Bolt	5	M12x80L	Spare Bolt Kit for Mast Assembly
Flat Washer	5	M12	
Spring Washer	5	M12	
Door Key	2		For Hatch door

3.4 System Cables

3.4.1 Primary Antenna Power+Data Cable

Intellian recommends using the RG6 or RG11 cable types to connect the antenna and CNX. The use of different type of cables can cause problems. If you need a cable that runs longer than the maximum cable length recommended, contact Intellian Technical Support for assistance.

Cable Type	Cable Length
RG6 (Supplied)	UP to 30m
RG11 (Customer Supplied)	UP to 100m

NOTE

Optimal tightening torque for F type RF connector: 1.5 N-m

3.4.2 Dual Antenna Connection Cable

RF Cable

Due to the signal loss across the length of RF coaxial cable on L-Band, use only 50 Ω coaxial cable types for standard system RF cable installation. The use of different type of cables (75 Ω coaxial types, etc.) can cause problems. If you need RF cables that run longer than the maximum cable length recommended, contact Intellian Technical Support for assistance.

Coaxial Cable Type	Connector	Max. DC Resistance	Attenuation @ 2 GHz	Max. Cable Length (≤ 16 dB loss @ 2 GHz)
LMR400	N(M) to N(M) Connector	0.8 Ω	0.196 dB/m	5 / 10 / 20 m

NOTE

- Optimal tightening torque for N type RF connector: 1.5 N-m
- Maximum RF loss at 2 GHz: 4 dB including connectors

LAN / Signal Cable

The recommended specifications and length of the LAN and signal cables are as follows. Refer to the table below. If you need Ethernet cables that run longer than the maximum cable length recommended, contact Intellian Technical Support for assistance.

Cable Type	Max. Cable Length
Ethernet Cat 5 STP Cable (Shielded)	20 m

3.4.3 AC Power Cables (Customer Supplied, Only for Heater Module)

The recommended specifications and length of the power cable are listed in the table below. If you need a power cable that runs longer than the maximum cable length recommended, contact Intellian Technical Support for assistance.

Cable Length	**UP to 100m**
AWG(American Wire Gauge)	14 ~ 18
Cable Cross-Sectional Area(Nominal Area)	3C(0.75 ~ 2.0 mm^2)
Cable Overall Diameter(mm)	6.5 ~ 9.5
Designation	IEC 60227

3.5 Installer/Customer Furnished Equipment

- Country specific power cable and socket for Power Adaptors
- Grounding system that meets the local electrical code requirements
- Waterproofing materials all connections
- Tape or wraps to attach the antenna cable to the support structurer
- Fasteners and other installation tools

3.6 Unpacking System Package

Follow the steps for easy and safe unpacking. The system package consists of two packages. The pallet should be lifted by a forklift. To unpack the wooden crate, follow the procedure below or refer to the ***Wooden Crate Unpack Guide*** attached on the crate.

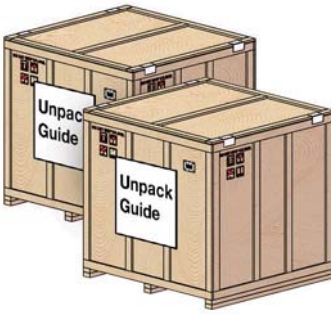

1. Open the side panel with the attached sticker paper (***Wooden Crate Unpack Guide***) by removing the fixing screw (1 ea) and clips (8 ea).

CAUTION

The side with the sticker paper attached must be opened first.

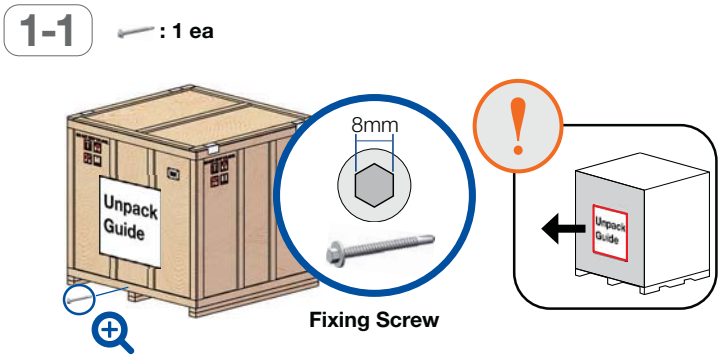

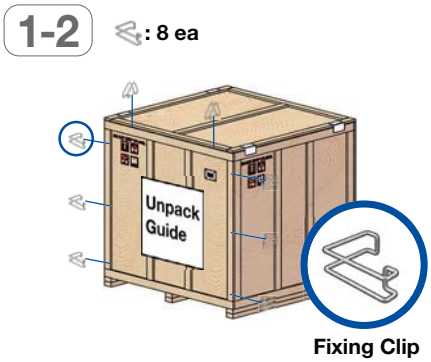

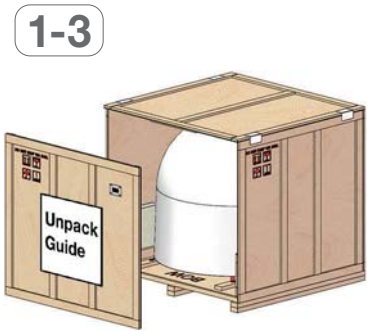

2. The Install Kit Box is placed inside of the side panels. Remove the fixing screws (2 ea) from the holding brackets, and then take the Install Kit Box out of the crate.

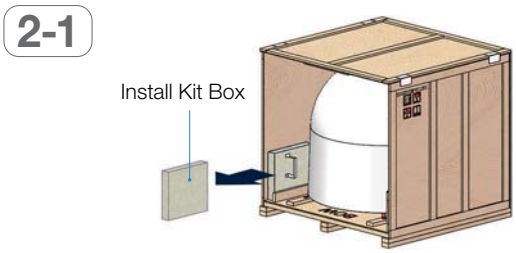

3. Remove the clips (6 ea) that attach the top panel, then carefully slide the top panel out from the crate.

WARNING

The brackets at the top two edges help the top panel to move stabily. When removing the top panel, ensure it doesn't fall on the radome.

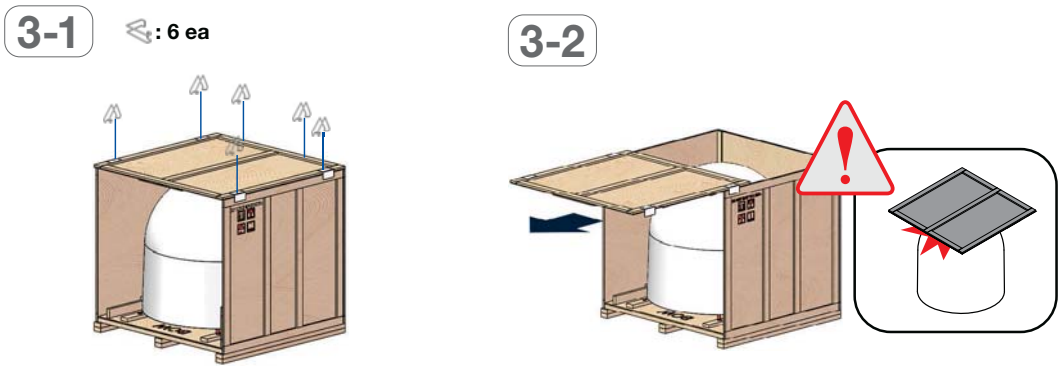

4. Remove the fixing screws (7 ea) that secure the three side panels, and then detach the panels.

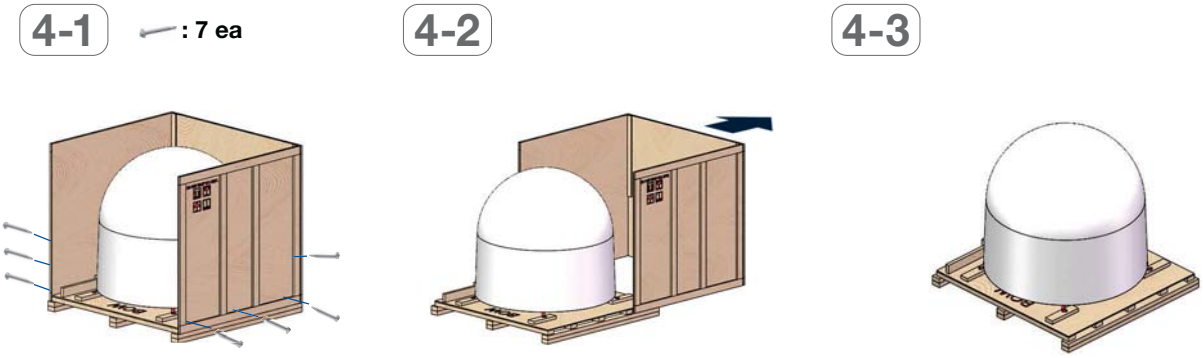

WARNING

The brackets at the top two edges help the top panel to move stabily. When removing the top panel, ensure it doesn't fall on the radome.

Chapter 4. Installing Outdoor Unit (ODU)

4.1 General Requirements

4.1.1 Antenna Mounting Requirements

You need to procure or fabricate a suitable mounting plate and pole to support the ODU (Outdoor Unit).

Consider the following factors to select the mounting method:

- The physical size of the unit (1430 mm (56.3 inches) high by 1500 mm (59.1 inches) diameter).
- The weight of the unit (About 95 kg (209.4 lbs)).
- The mechanical resonance of the system excited by wind : 5 Hz
- The system operates in primary-secondary mode. Ensure there is < 20 m (10 m or 20 m Inter-dome cable kits are available to purchase separately) separation between the primary and secondary antenna.
- Ensure the antenna is levelled ±1° in elevation and ±10° from the True North axis.
- The mounting method should be able to preserve antenna pointing calibration under wind load and protect safety of life and safety of property.

4.2 Antenna Dimensions

Before installing the antenna unit, confirm its height and diameter (see figure below). The mounting surface and overall space occupied by the radome must be sufficient for the height and diameter of the fully constructed radome on top of its mounting base. The primary and secondary radome dimensions are the same.

Unit: mm (inches)

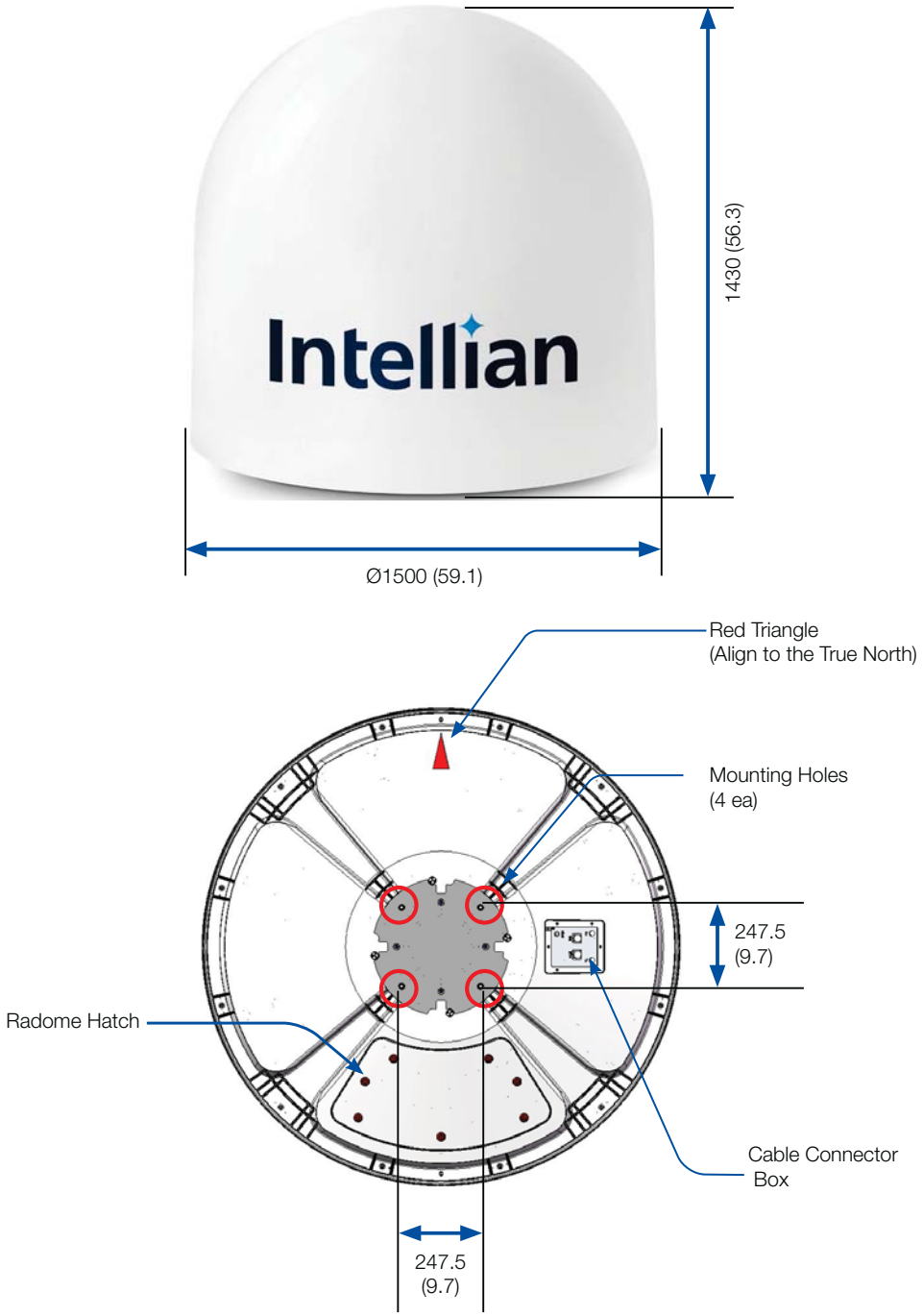

Figure 4: Antenna Dimension

4.3 Installing in the Vicinity of Cellular Communications Towers

The Intermediate frequency (IF) range of the receiver of the User Terminal is 1850-2100MHz. Therefore, should a User Terminal be installed in the vicinity of a Cellular Communications Tower operating on those frequencies, the performance of the User Terminal may by impacted by RF interference from that tower. In addition to satisfying the Field of View requirement, we recommend that the User Terminal is installed at a location where, for example in the case of an LTE interferer, the following requirement is satisfied:

Interference Requirement:

- LTE Frequency Range : Outside 1850~2100 MHz, or
- RSRP Level: -45 dBM or less

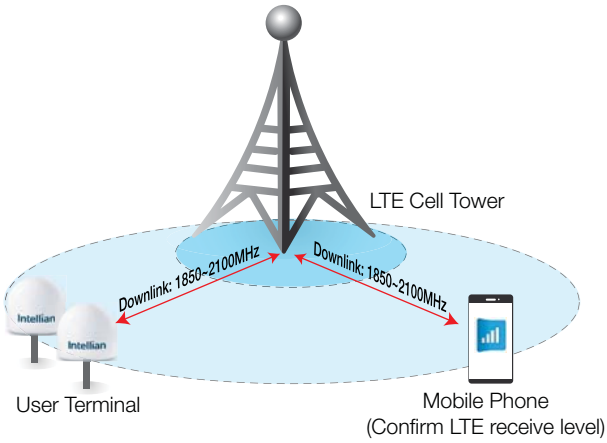

Procedure to check LTE frequency and RSRP level:

1. Download the “LTE Discovery” app on an Android phone (not available on iPhone).

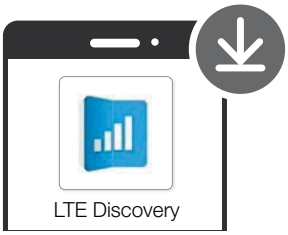

2. Run the app and check the RSRP level and downlink frequency.

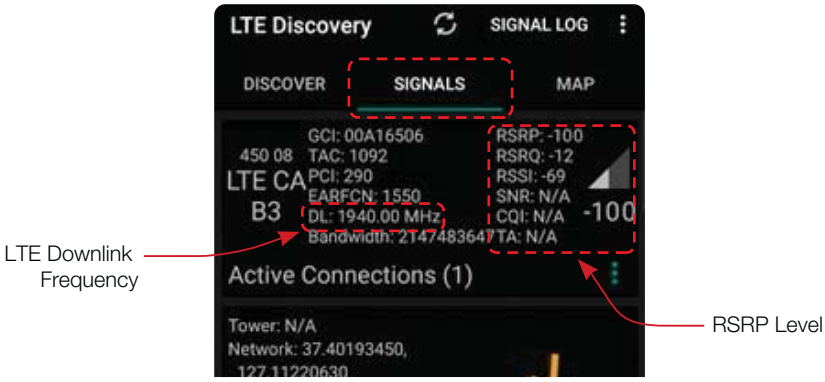

3. Install the User Terminal in a location where the Interference Requirement is satisfied (outside 1850~2100 MHz, or RSRP -45 dBm or less).

4.4 Measuring the North point

The installation of the OW130L needs to be oriented toward true north. If you are using a magnetic compass, you will need to calculate the declination angle to compensate for the difference between magnetic north and true north. If possible use a GPS compass to assist in better alignment of the User Terminal.

You should measure true north at the same time as you are mounting the antenna.

A. Finding True North Using a Magnetic Compass

1. Measure the orientation of magnetic north using the compass.
2. Mark the magnetic north point on the mounting plate.
3. Get the magnetic declination angle at the installation area using the NOAA calculator (refer to the Magnetic Field Calculators on the National Oceanic and Atmospheric Administration (NOAA) website www.ngdc.noaa.gov).
4. Mark the True North point on the mounting plate by including the declination angle.

B. Finding True North Using a GPS Compass

1. Check the orientation of the true north indicator.
2. Extend a virtual line from the center of the User Terminal to the tip of the true north indicator (line) using a GPS compass (a smart phone application or a device).
3. Compare the virtual line to the North Direction Mark on the bottom of the radome to see if there is any misalignment.

Refer to the below app screen as a reference.

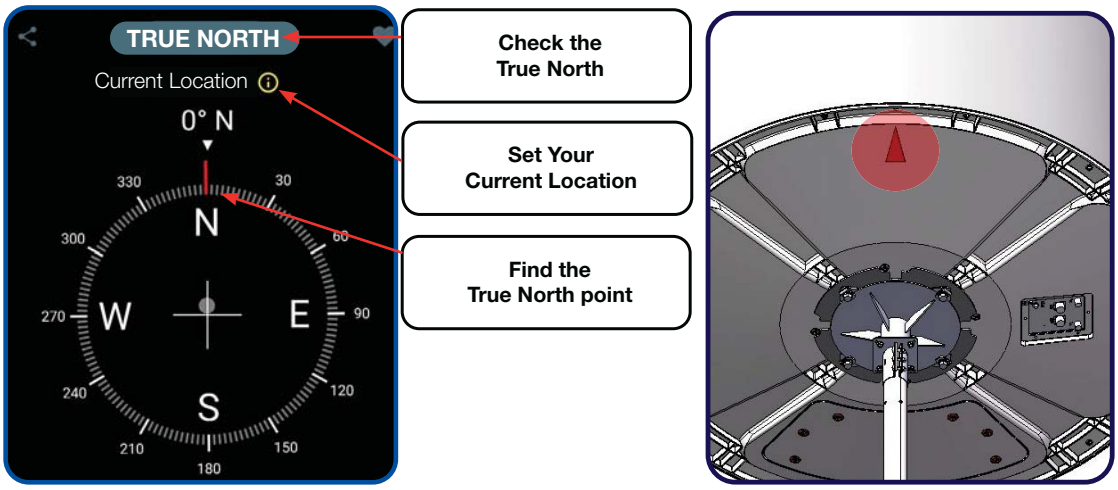

C. When using a LUI

1. Connect an Ethernet cable from the LAN Port on the front panel of CNX to a LAN Port of PC. The Data LED indicator will turn Green if CNX is connected.
2. Enter the IP address into your web browser's address bar to log in to the Local User Interface (LUI).
   - **IP Address: 192.168.100.1 (Default)**
3. Select the **Antenna** on the main menu then go to the **Antenna Setup ➔ Heading** menu.
4. For setting the true north offset, you need to select a satellite which is trackable in satellite information. When the antenna tracks the selected satellite, true north offset can be calculated.
   - Heading(°): Enter the True north Offset Range (-180° – 180°).
5. Click the **Submit** button to apply the settings to the system.

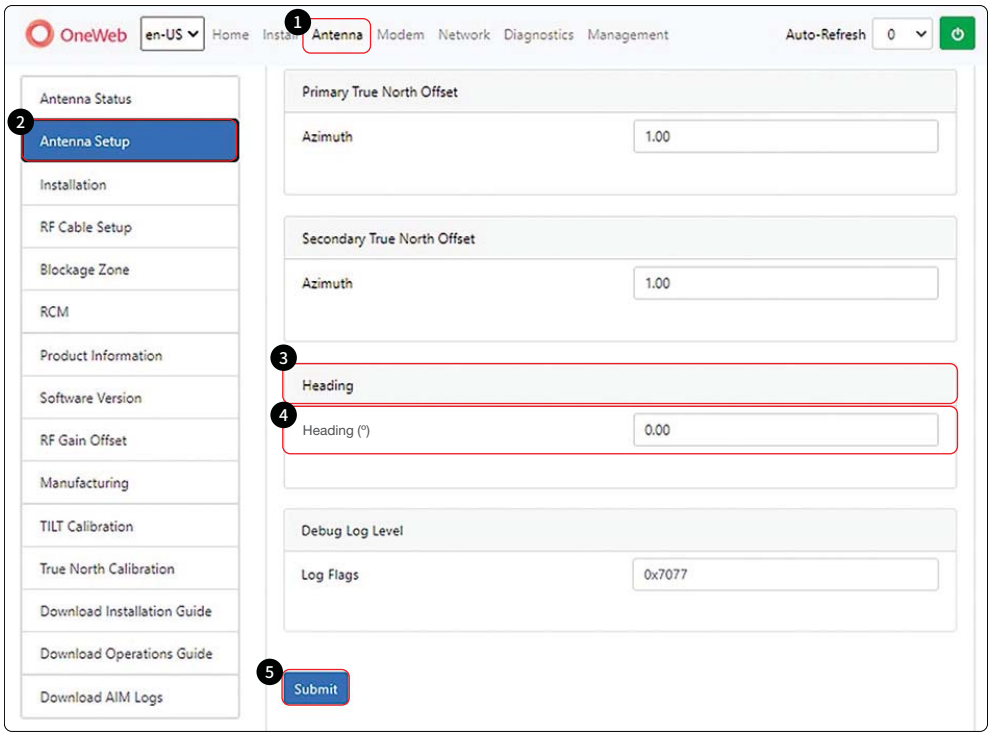

4.5 Designing Pole Mount

4.5.1 Assembling Base Panel of NPM (Non-Penetrating Mount)

This is generally recommended. Check the requirement tools before assembling the NPM

FASTENERS			
No	**ITEM**	**DESCRIPTION**	**Q'ty**
1		5/16"-18*5/8" Round flat head Square screw	11
2		5/16"-18*7/8" Round head Square screw	16
3		5/16"-18x4" hex-head cap screw	16
4		5/16"-18 washer	59
5		5/16"-18 nylon nut	43
6		Ø8.5/Ø12.5*L70 Bush	8
7		5/16"-18x1-1/4" hex flange screw	2
8		5/16"-18 kepts k-lock nut	4

TOOLS
13 mm wrench

HARDWARE					
DESCRIPTION	**Q'ty**	**DESCRIPTION**	**Q'ty**	**DESCRIPTION**	**Q'ty**
Ground Mounting Base(#A)	8	Mast Pole(#B)	16	Side Supporting Rods(#C)	4
A		B		C	
DESCRIPTION	**Q'ty**	**DESCRIPTION**	**Q'ty**	**DESCRIPTION**	**Q'ty**
Support Plate(#D)	2	Ground Mounting Base(#E)	4	Connecting plate(#F)	4
D		E		F	

RUBBER MAT					
DESCRIPTION	**Q'ty**	**DESCRIPTION**	**Q'ty**		
100cmx100cm(#A)	2	100cmx200cm(#B)	3		
G		H			

CAUTION

Make sure that is placed on a firm, level surface when installing the NPM.

1. You should put down the rubber mat to prevent the NPM from slipping. Assemble 2 pcs rubber mat (Ⓖ) and 3 pcs rubber mat (Ⓗ) as below picture.

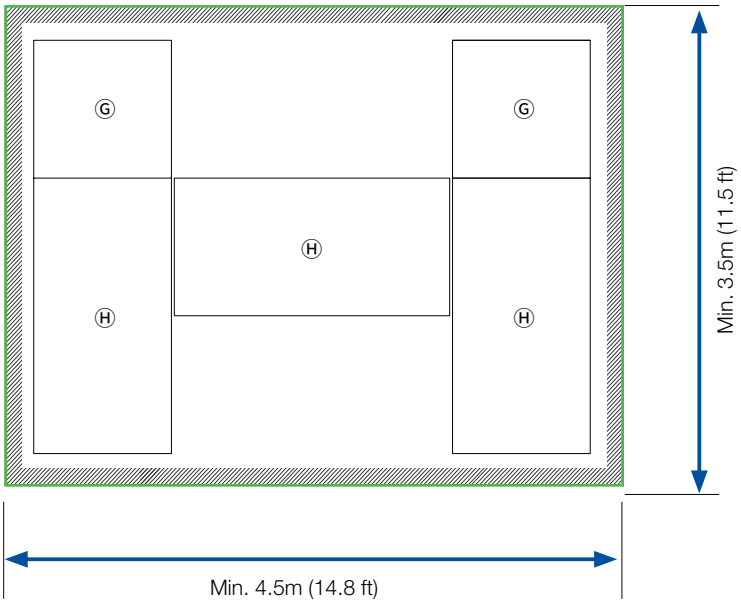

2. Assemble center 2 set Ⓐ mounting bases (#A) and 2 set Ⓔ ground mounting bases (#E) with ① screw, ④ washer, ⑤ nylon nut.

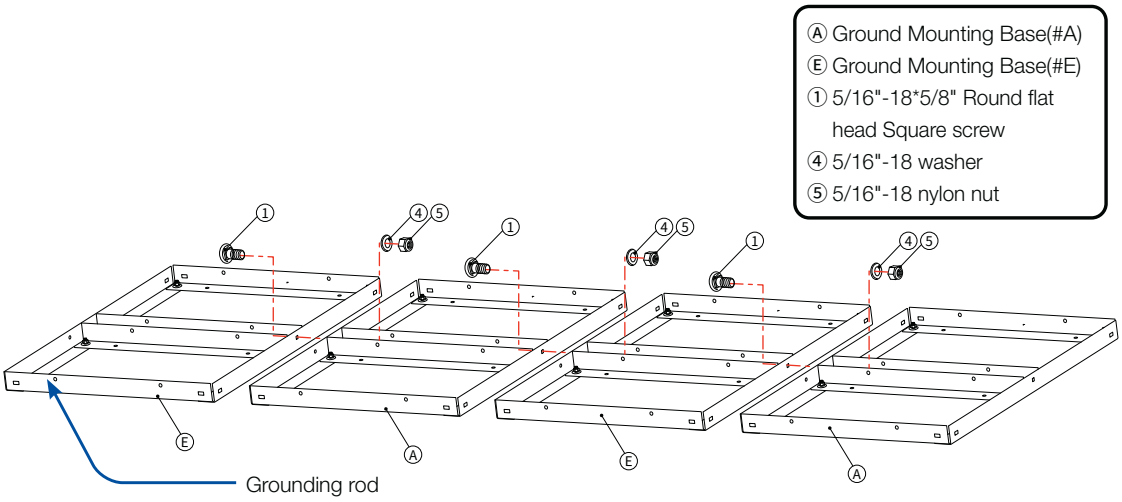

3. Assemble 4 pcs ⓓ support plates(#D) with ② screw, ④ washer, ⑤ nylon nut.

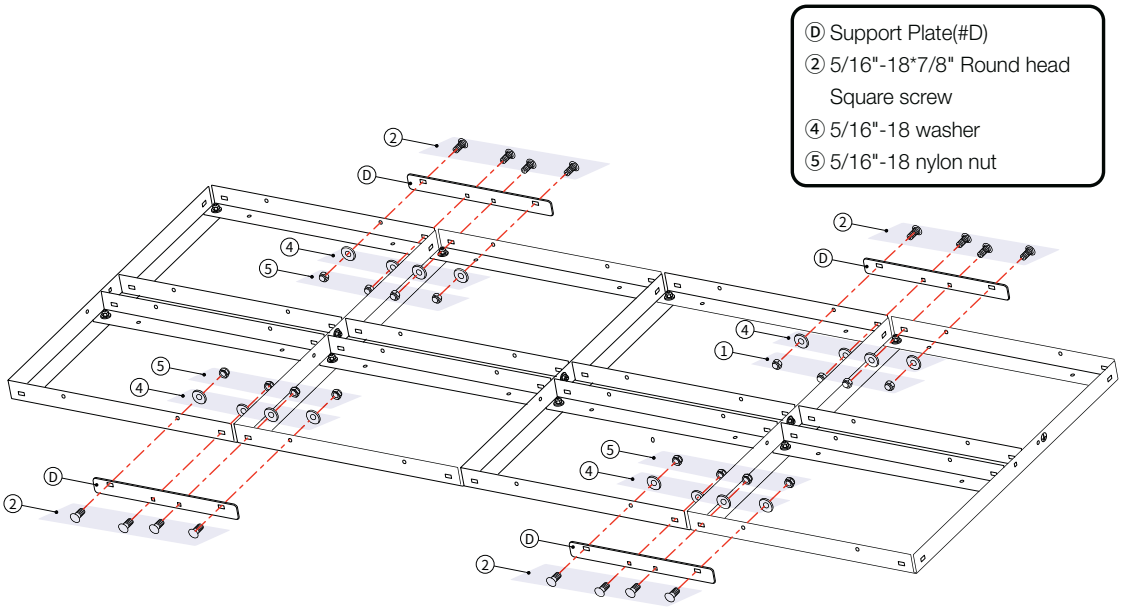

4. Assemble side 3 set Ⓐ mounting bases (#A) with ① screw, ④ washer, ⑤ nylon nut. (Assemble are 2 sides, drawing shows left side)

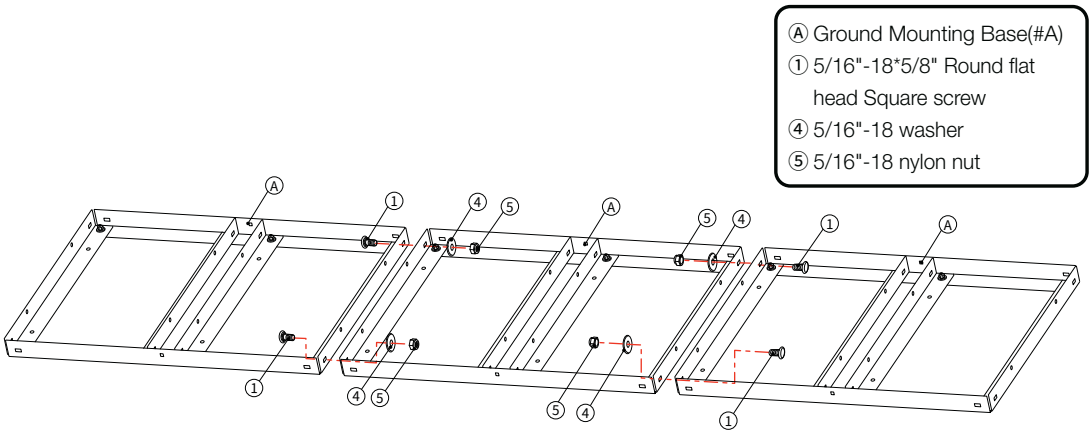

5. Assemble center, side mounting bases, mast pole (#B) with connecting plate (#F), screw (#3), washer (#4), nylon nut (#5). (Assemble are 2 sides, drawing shows left side)

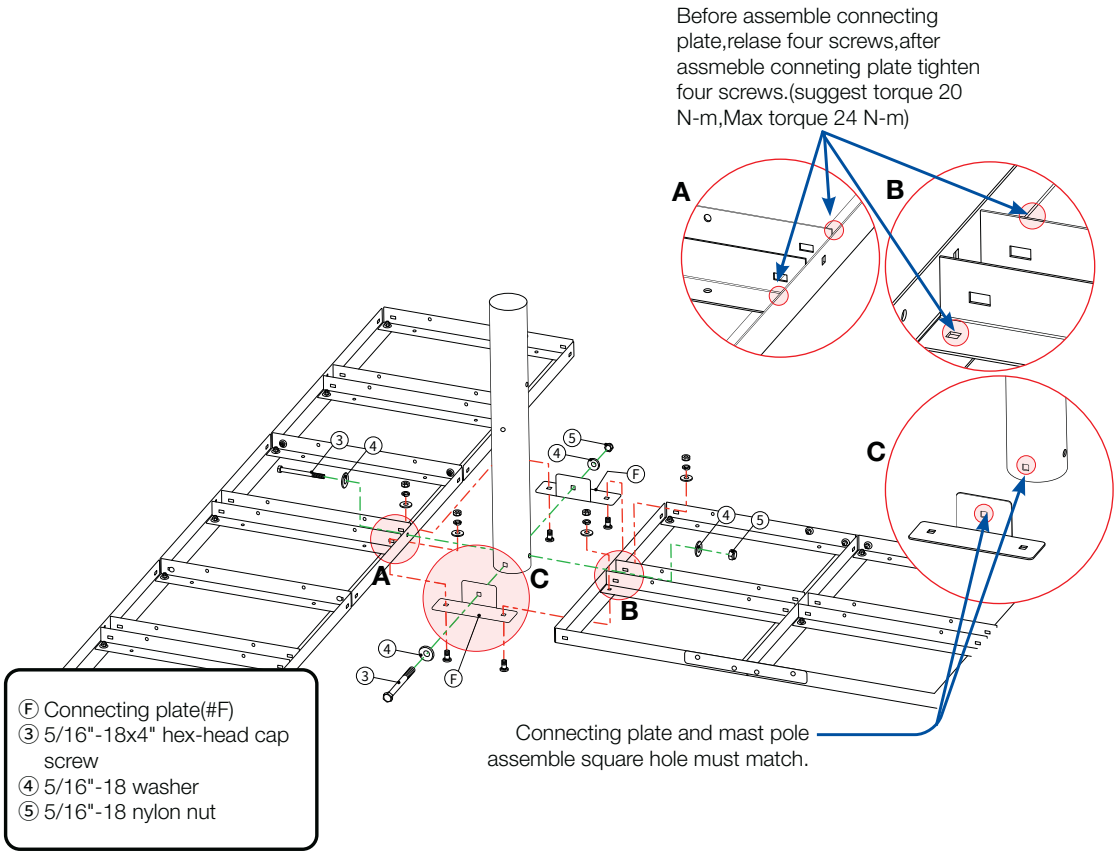

6. Assemble side ⓒ supporting rods (#C) with ③ screw, ④ washer, ⑤ nylon nut and ⑥ blush. (Assemble are 2 sides, drawing shows left side)

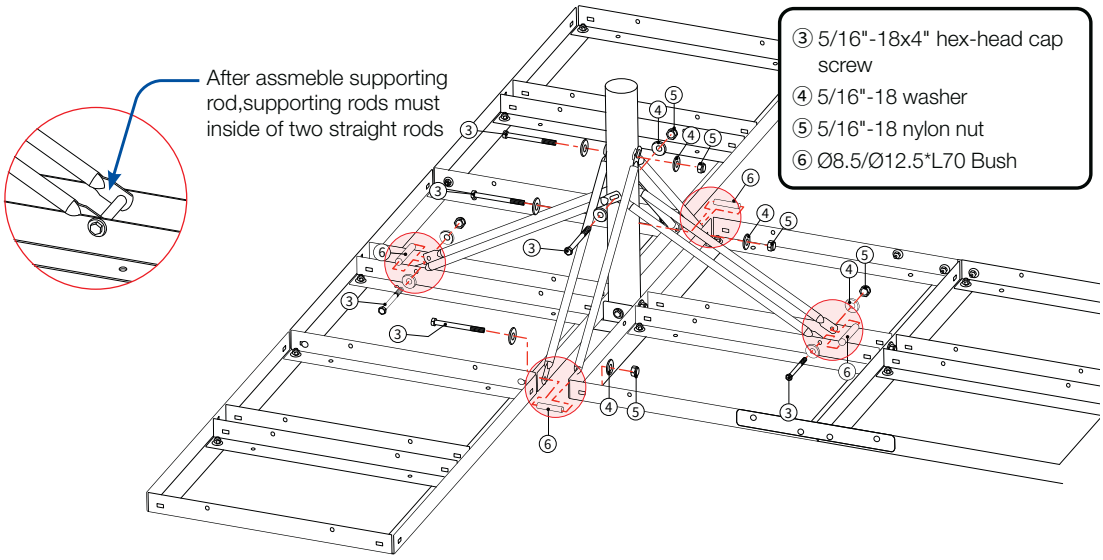

7. Assemble ground cable with ⑦ screw and ⑧ kepts k-lock nut(#8). (Assemble are 2 sides, drawing shows left side)

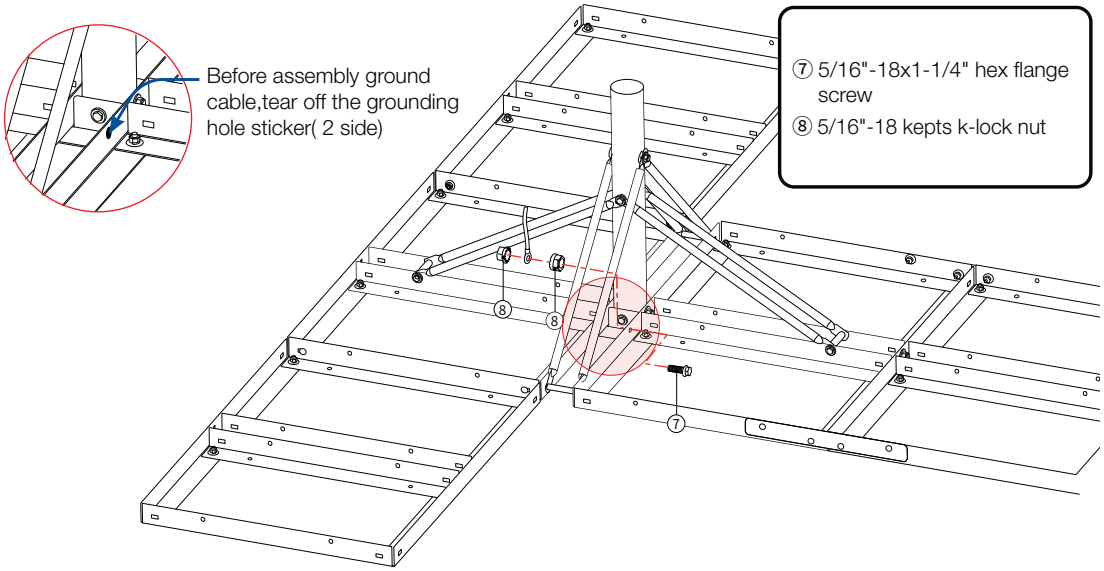

Penetrating fastener option: For directly mounting using fasteners, place appropriately fasteners, at the locations circled in the below diagram.

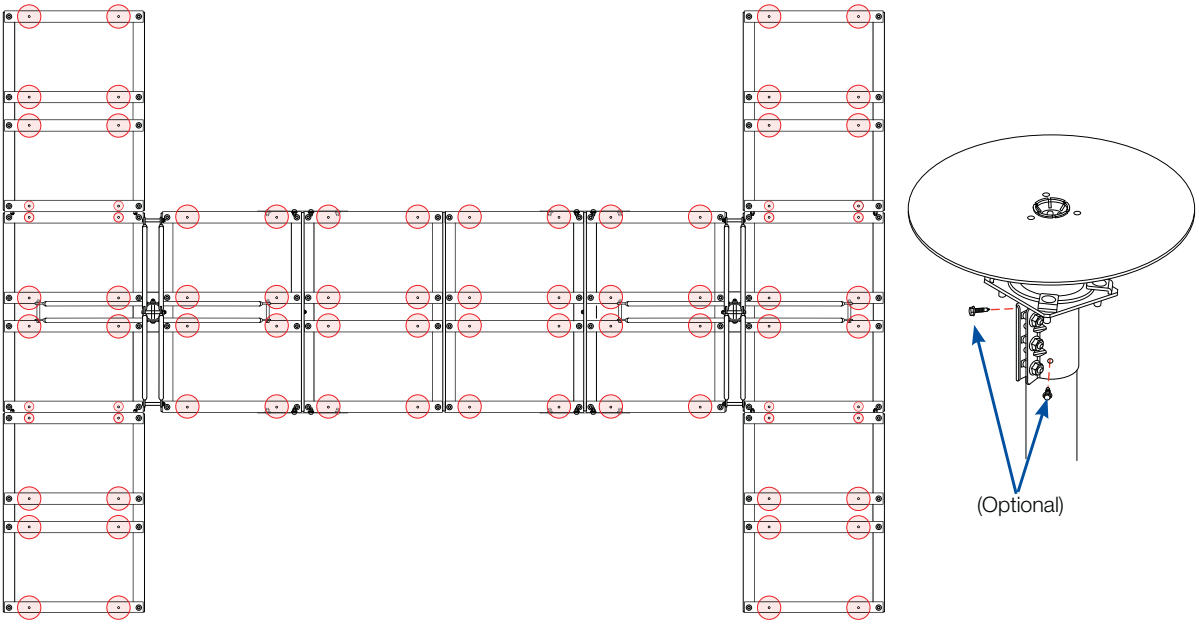

4.5.2 Installing Customized Pole Mount

Customized pole mounts must be correctly installed in order to be robust enough to prevent any flex, vibration and sway when an external force is exerted with the antenna attached.

Figure to the right (Single dome) is an example of a customized pole mount installation.

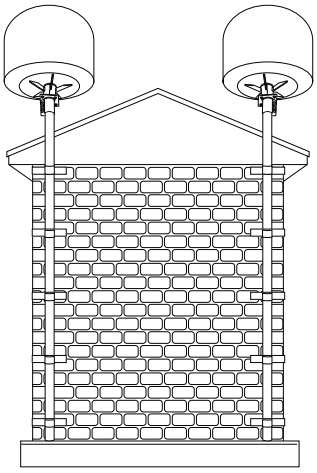

Designing the Customized Pole Mount

When designing the pole consider the pole types and their maximum length. The Fixture Distance describes the fixtures with distance between them. Refer to the following table for more details.

Pole Type	Pole Diameter	Pole Thickness	Max Length (A)	Fixture Distance
50A	60.5 mm (2.4")	2 mm(0.1")	500 mm(19.7")	400 mm(15.8")
65A (Recommended)	76.3 mm(3.0")	2 mm(0.1")	650 mm(25.6")	500 mm(19.7")
80A	89.1 mm(3.5")	4 mm(0.2")	900 mm(35.4")	700 mm(27.5")
90A	101.6 mm(4.0")	4 mm(0.2")	1000 mm(39.4")	800 mm(31.5")

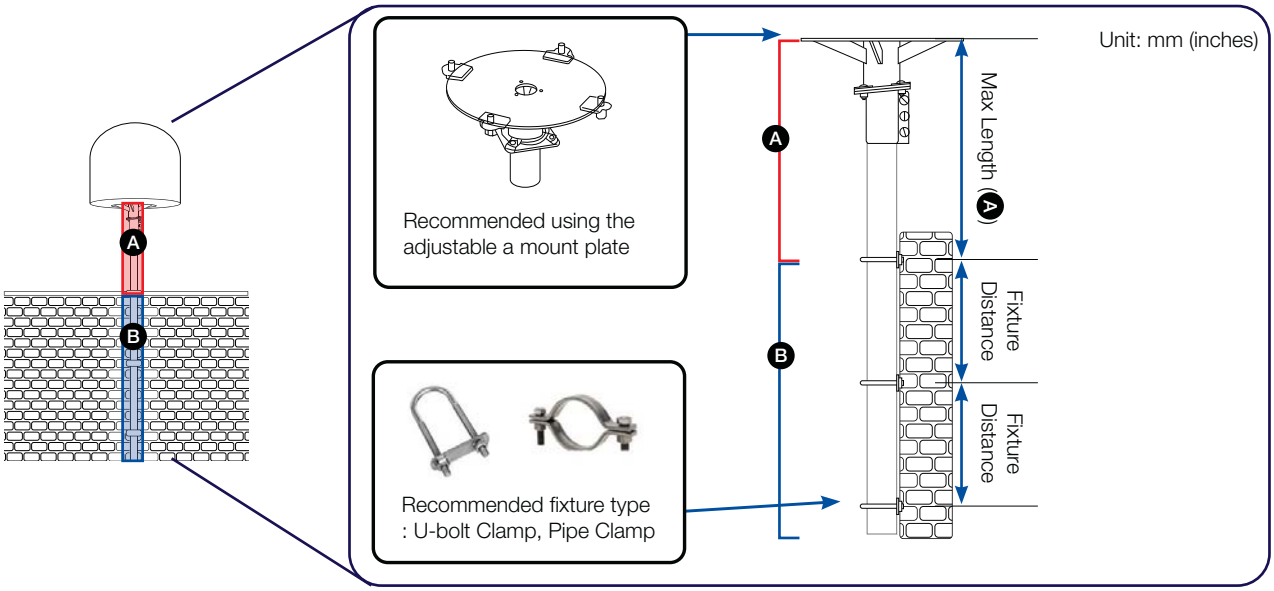

- For example, if using 50A of pole type for the antenna installation, maximum length of (A) cannot exceed 500mm. remaining pole, (B) should be fixed with minimum 3pcs of fixtures and the distance among them should be 400mm.

- The Max Length of Ⓐ is a length without the additional Ⓑ. In order to use the tilt adjustable mount plate, it is recommended using a pole type 50A. To use the recommended Ⓐ pole type (50A), the maximum length should be 500 mm. If the pole type is different from the recommended type, check the max length for a pole type according to the table.
- There are no Ⓑ pole length limits but it must be installed on a place of sufficient structural integrity in order to prevent any flex, vibration and sway from such wind or external force. The Ⓑ pole can be used as a thicker pole type than the Ⓐ pole. The fixtures should be Installed at recommended intervals (see the Fixture Distance). Recommended fixture types are an u-bolt clamp and a pipe clamp.
- We recommend using the adjustable a mount plate to adjust the tilt level. (Refer to **“5.5 Placing Antenna on Fine Tune assembly” on page 30**.)

4.6 Placing Antenna on Fine Tune assembly

4.6.1 Assembling the Fine Tune assembly

Check the requirement tools before assembling the Fine Tune assembly

FASTENERS			
No	ITEM	DESCRIPTION	Q'ty
1		M10x30L Round head Square screw	4
2		M10Flange nut	4
3		M12*35 hex-head cap screw	4
4		M12 Spring Washer	4
5		M12 Washer	4
6		#10-3/4” tapping screw	

TOOLS
13 mm wrench
19 mm wrench

Hardware					
DESCRIPTION	Q'ty	DESCRIPTION	Q'ty	DESCRIPTION	Q'ty
TOP FINE TUNE ASSY. (#A)	1	BOTTOM PLATE CLAMP (#B)	1	TOP PLATE CLAMP (#D)	4
DESCRIPTION	Q'ty	DESCRIPTION	Q'ty		
CLAMP ASSY.(#D)	4	FIX CLAMP (#E)	4		

Assemble Top fine tune Assy and clamp Assy with bottom plate clamp (#C), screw (#1), flange nut (#2).

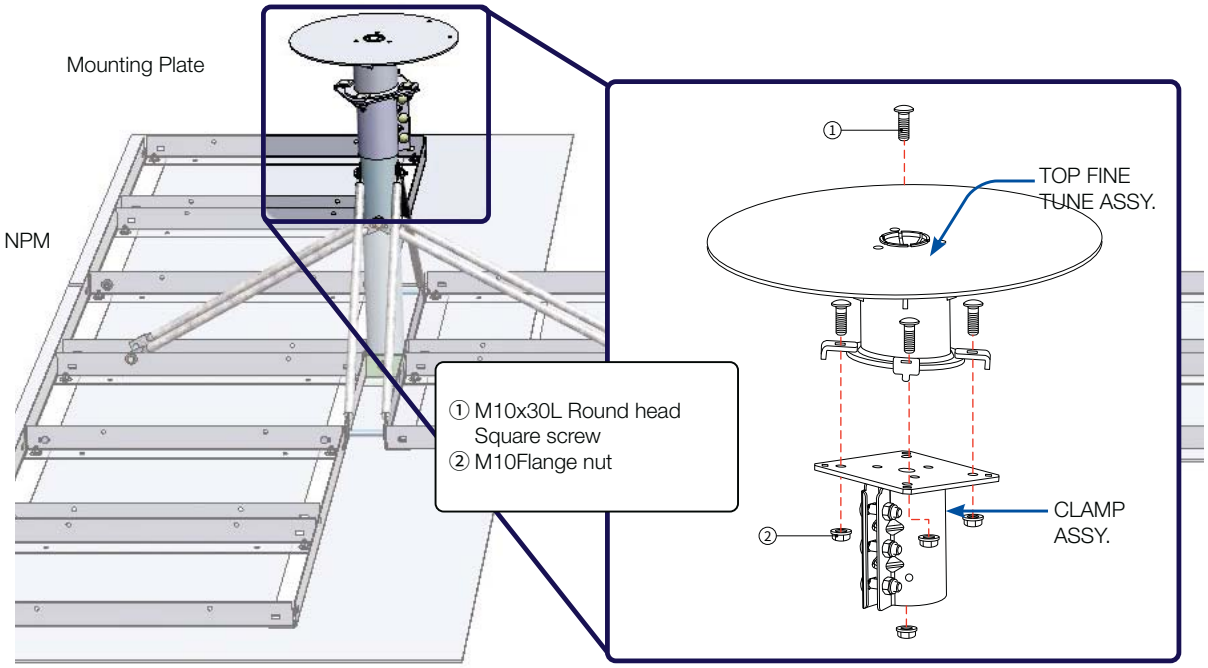

4.6.2 Levelling the Mounting Plate

1. Put a Levelling tool on the centre of the mounting plate.

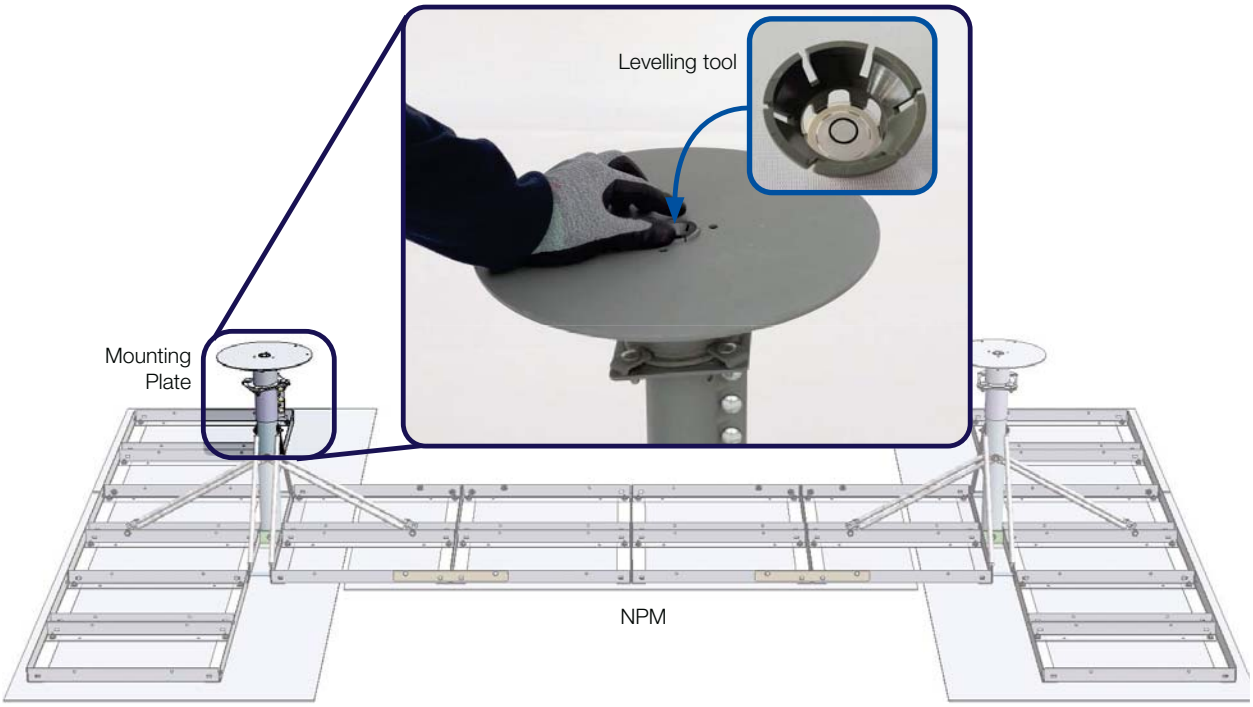

2. Rotate and adjust up & down the plates until they are perfectly parallel to the ground using the Levelling tool. Check to see whether the bubble is aligned with the guide circle.

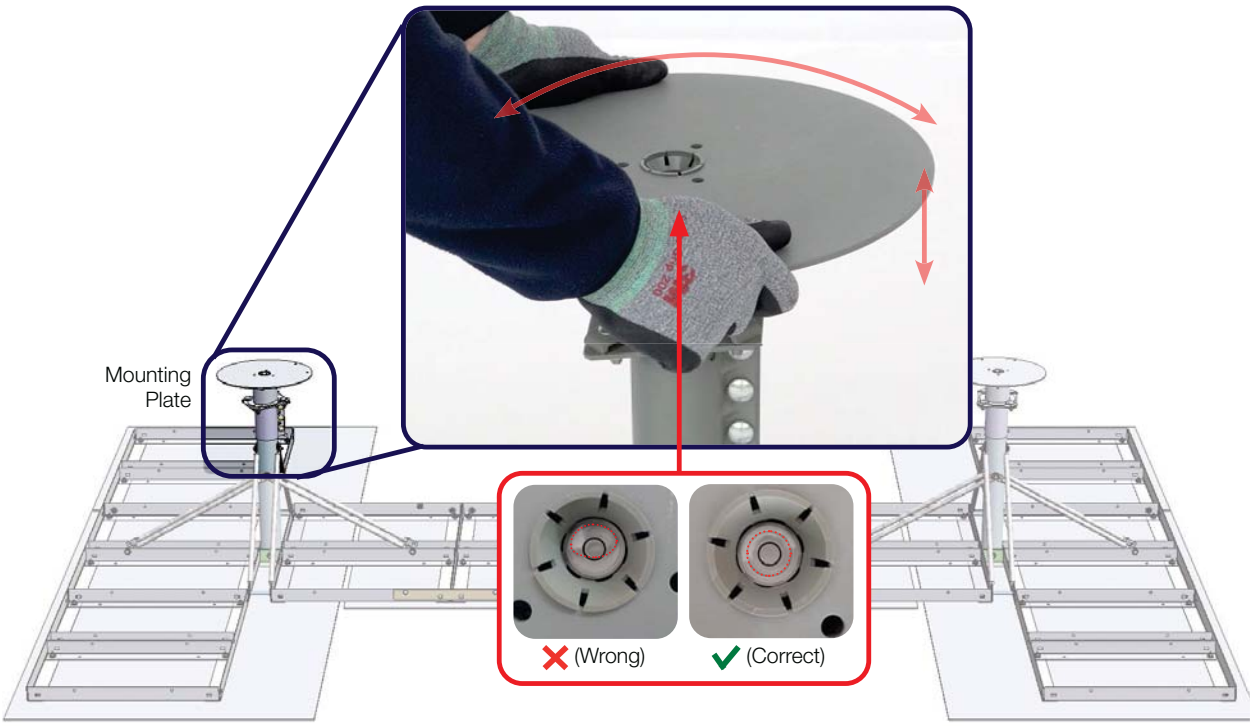

NOTE

After levelling the mounting plate, refer to **"4.6.1 Assembling the Fine Tune assembly" on page 31** for assembling a bolts (M10 Flange Nut).

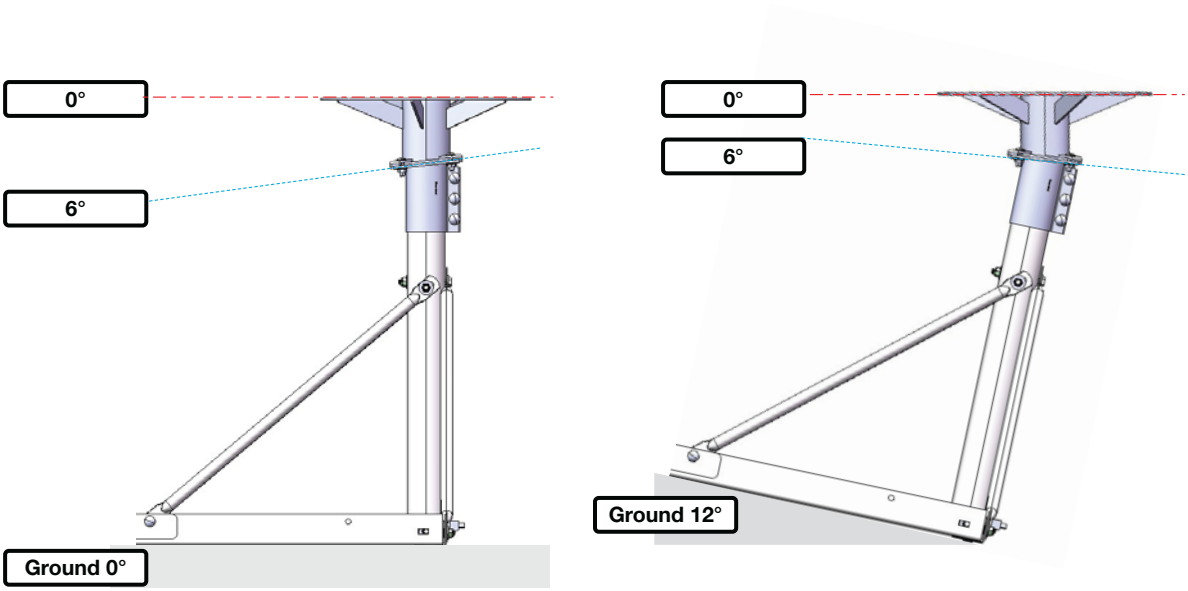

Figure 5: Compensation angle of NPM UT Mount Plate Relative to the Ground

4.7 Removing Antenna from Wooden Pallet

Four radome brackets secure the antenna to the pallet. To remove the radome from the pallet and the brackets from the radome, use the following procedure.

1. Remove the hex head wrench bolts (2 ea) from each of the radome brackets (4 ea) using a wrench.

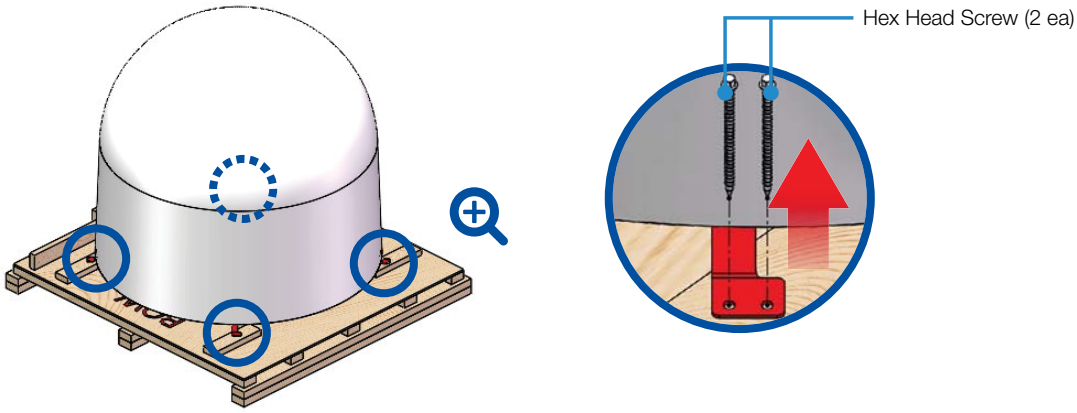

2. Lift the antenna above the pallet using one of the two following methods.
   - **Lift and carry using a lifting strap**
     Assemble Lifting Strap on the radome. Refer to **"10.3 Using a lifting strap" on page 68.** Check the condition of the lifting strap to make sure the shackles (2 ea) are tightened. After checking the shackles, re-wrap them with the existing protection to avoid radome damage. Lift the antenna above the pallet using a crane, and allow sufficient space (max. 1 m) between the bottom of the antenna and the pallet to remove the shipping brackets.

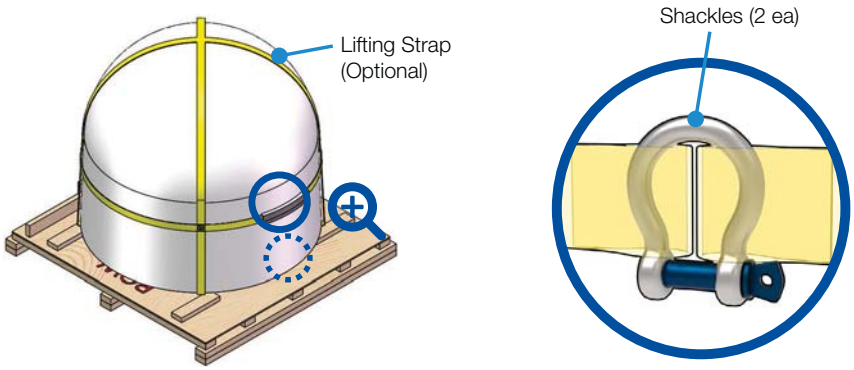

NOTE

Separate purchase of lifting strap is required. Refer to **"10.3 Using a lifting strap" on page 68** for using a lifting strap.

WARNING

- Before lifting the antenna, make sure that you have removed the bolts that secure the radome brackets to the pallet. Otherwise, the pallet will not separate from the antenna.
- Be careful when lifting heavy objects. Incorrect handling of heavy objects may lead to personal injury or significant equipment damage.

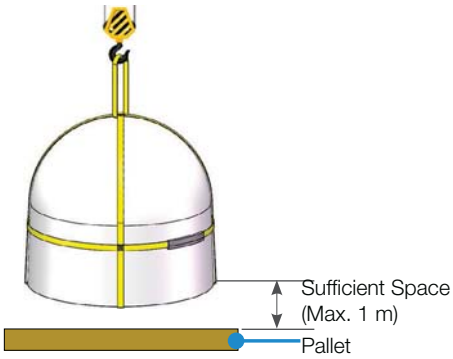

- **Lift and carry antenna by hand**
  Each antenna is about 100 kilograms (220.46 lbs). Therefore, when you lift or carry the antenna by hand, we recommend that the installation should be performed by several people to prevent damage of the antenna or personal injury.

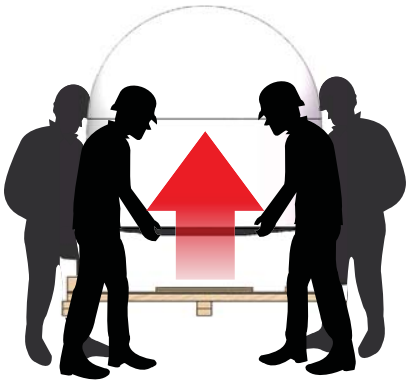

4.8 Mounting Antenna on Mounting Plate

4.8.1 Moving Antenna Above the Mounting Plate

Lift the antenna above the mast and carefully lower down the antenna toward the NPM.

WARNING

When moving the antenna by using a lift strap, it may sway in the wind. Be careful when handling the antenna.

4.8.2 Installing Bolts for Antenna-Mounting Plate Assembly

1. Locate the antenna mounting holes and roughly position the “Red triangle” on the radome towards *true north.

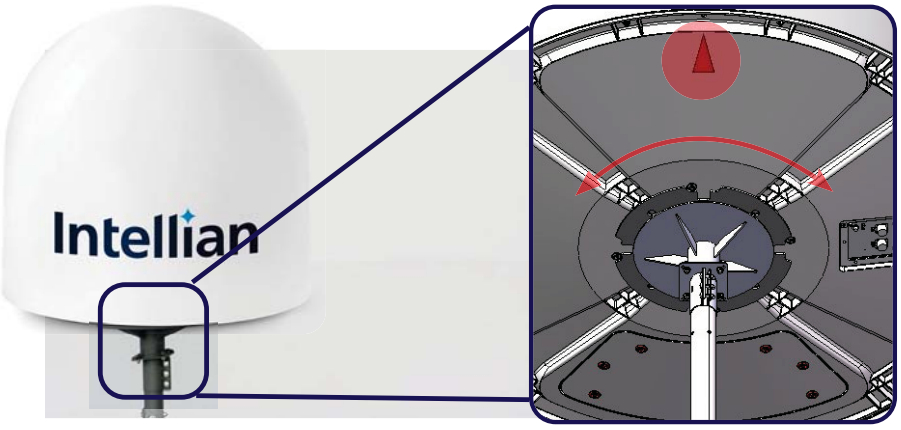

2. Make sure the antenna is centered with the the NPM plate when mounting the antenna on the NPM. Align the end of four grooves on the radome foam with the end edge of the NPM plate.

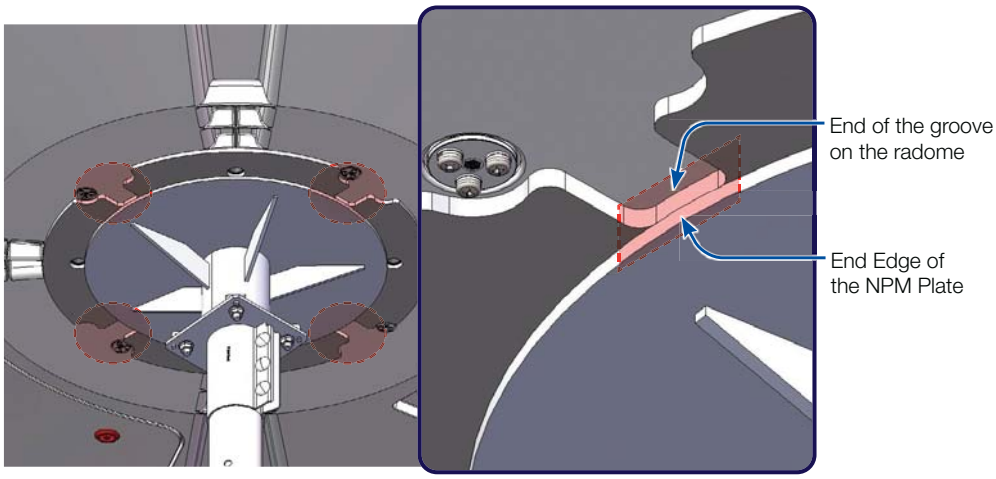

3. Find the M12x35L Hex. Bolt M12 Spring and Flat washer (4 ea) from the NPM Install Kit. Position the fixings & bolts into the antenna holes and do not fully tighten at this stage.

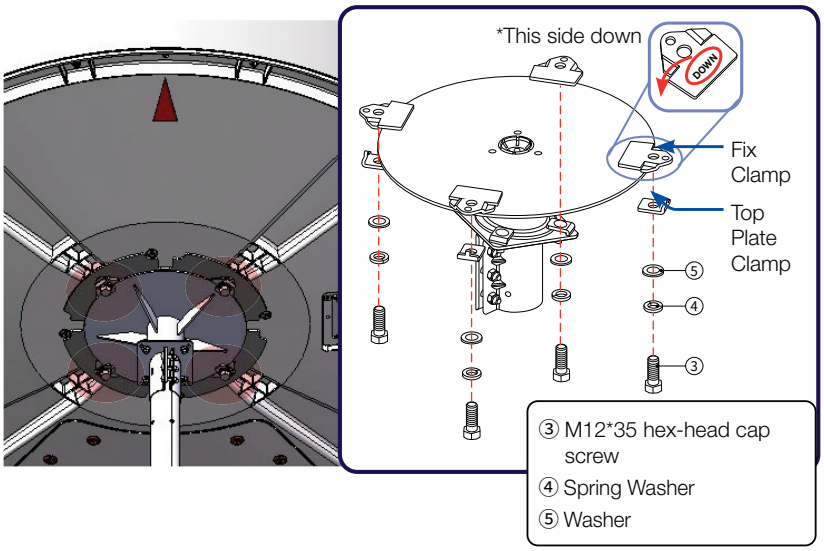

NOTE

This must be done for both the Primary and Secondary antennas.

4.8.3 Aligning the Antenna to the True North

1. Confirm the red triangle on the bottom of the radome and rotate the antenna to align with middle strut of base.

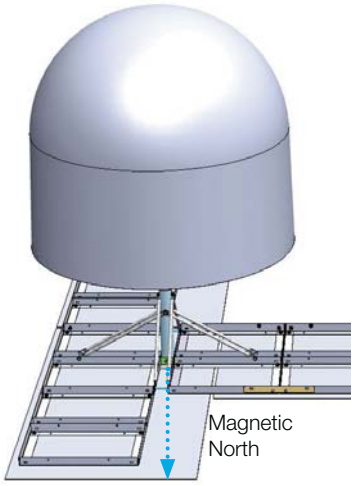

2. Mark the true north point on the mounting plate by including the declination angle using a True North indicator. (Refer to "4.4 Measuring the North point" on page 22)

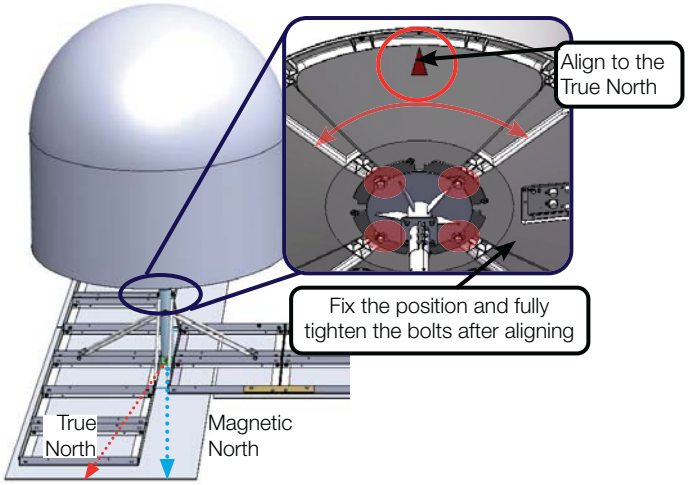

3. Fix the position and fully tighten bolts after aligning the antenna.

WARNING

- Ensure the antenna is mounted within ±1° elevation angle.
- Ensure the antenna is aligned within ±10° degrees of True North.

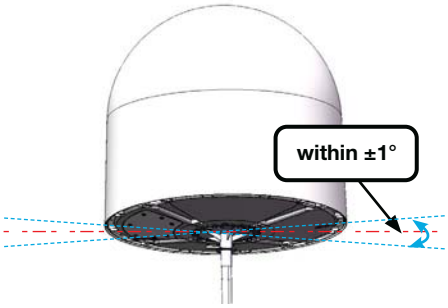

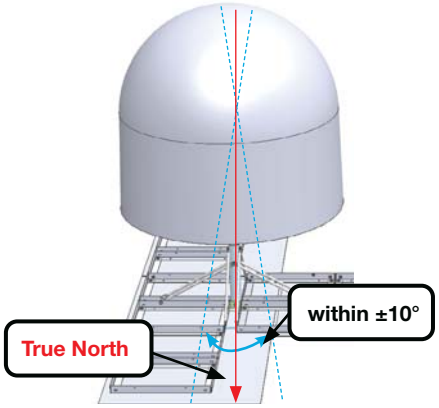

4.8.4 Placing Concrete Blocks on Base Panels

1. Place the concrete blocks on the base panel to hold the weight of the antennas.
   One concrete block is 39 x 19 x 19 cm (15.3 x 7.5 x 7.5 inches) /17.56 kg (38.7 lbs).
   The area of the assembled base panel is 3940.1 x 2693.6 mm (155.1 x 106.0 inches).

2. Arrange 18 concrete blocks on the base panel in a single layer.
   The total weight of 82 concrete blocks is 1440 kg (3,174.7 lbs).

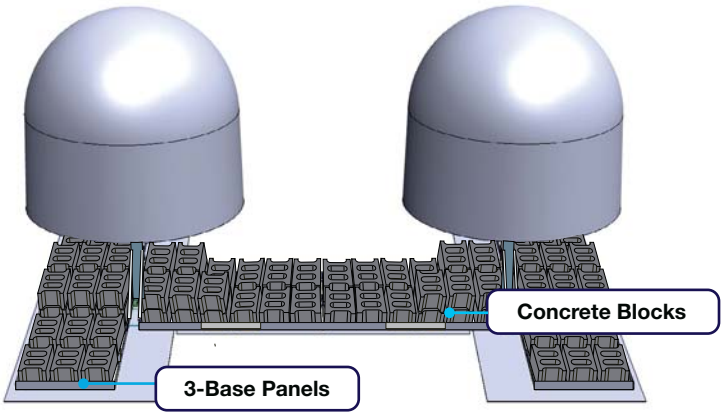

Figure 6: Placing Concrete Blocks on Base Panel of NPM

NOTE

If you want to use alternative weight instead of concrete blocks as shown above, please make sure that total weight of the alternative should meet suggested weight, 1440 kg (3,174.7 lbs).

4.9 Removing the Radome Bracket

1. Loosen the Ⓐ radome bracket bolt (1 ea) slightly using a wrench. You should loosen just enough of the bolt to remove the radome bracket from the radome.
2. Detach the Ⓑ radome bracket from the radome.
3. Tighten the bolt and washers to the radome by turning the bolt clockwise using a wrench.
4. Repeat steps 1 through 3 for each remaining radome bracket.

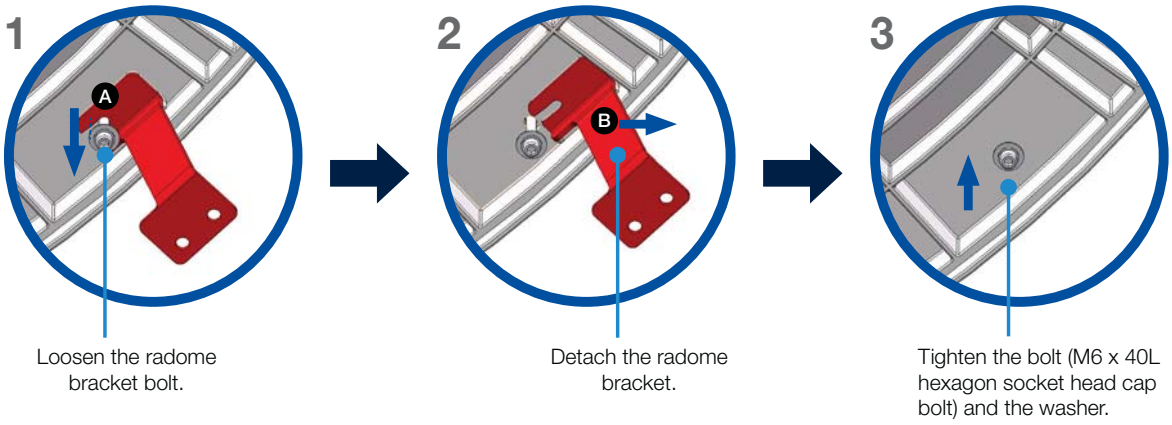

4.10 Removing the Shipping Brackets

4.10.1 Opening Radome Hatch

Access the ODU module inside the radome through the radome hatch to connect the system cable. Make sure that there is a sufficient space to open the radome hatch underneath the radome. Loosen the radome hatch locking using the provided door key, and then open the radome hatch.

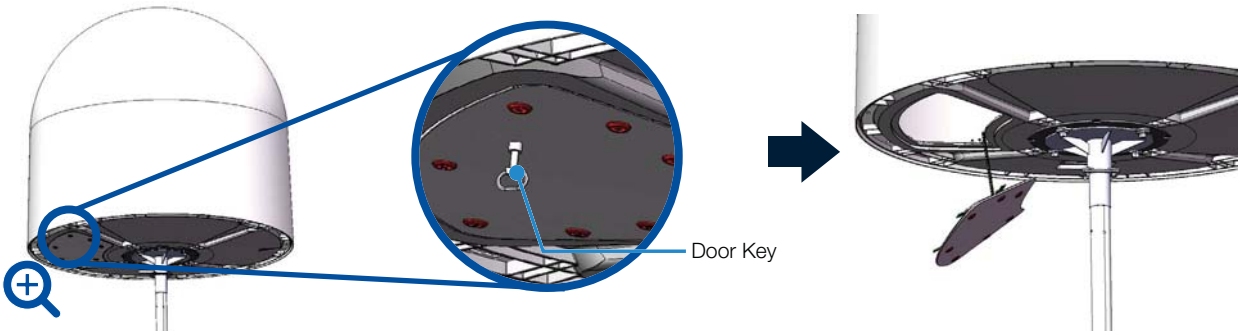

Figure 7: Opening Radome Hatch

NOTE

Be sure to keep the door key in safe place after using it. You will need the key to open or close the radome hatch.

4.10.2 Removing the Shipping Brackets and Cable Ties

WARNING

- Be carefu when removing the bracket and cable tie, because the antenna and mast are not bolted securely.
- Be careful when removing the EL shipping bracket to avoid antenna damage.

1. Remove the Cable Tie (3 ea) by using nippers, and then detach the bracket.

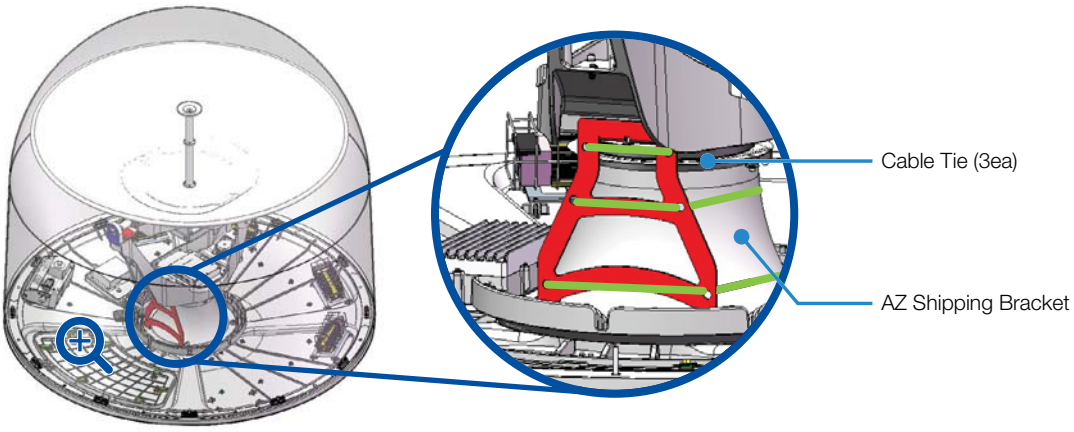

Figure 8: Removing the AZ Shipping Bracket

2. Remove the cable tie (2 ea) using nippers, and then detach the CL shipping foam.

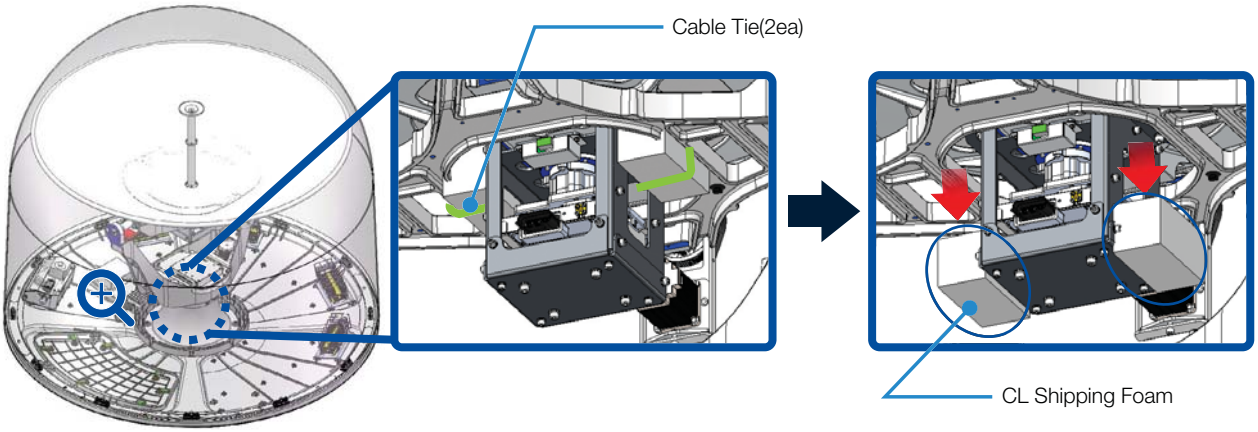

Figure 9: Removing the CL Shipping Foam

3. Remove the EL shipping bracket bolt (4 ea) using a wrench, and then detach the bracket.

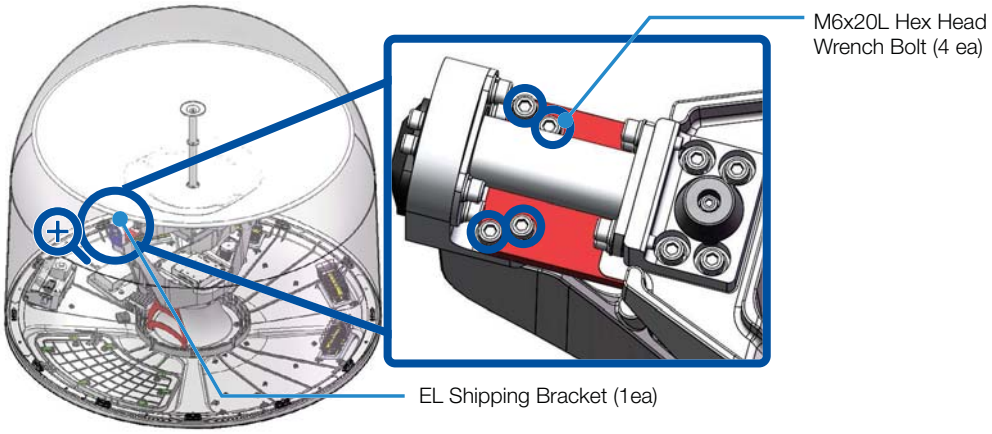

Figure 10: Removing the EL Shipping Bracket

4.10.3 Closing Radome Hatch

After removing all the brackets inside the radome, close the radome hatch and lock slotted bolts (7 ea) securely using the door key provided.

4.11 Connecting Cable to Antenna

NOTE

Make sure of the following before installing system cables.

1. All cables with connectors need to be fully secured and protected from physical damage.
2. Don't acutely bend any cables during installation.
3. To reduce any damage from water (mist) or Ultraviolet Rays (UV), tape over using waterproof and UV protective tape all the connectors located outside.

4.11.1 Connecting Cable to Primary Antenna

Terminate F(M) Connector on each end of RG6 (or RG11) Cable and Connect the F-Connector to the Power & Data connector on the Primary Antenna and the CNX Unit.

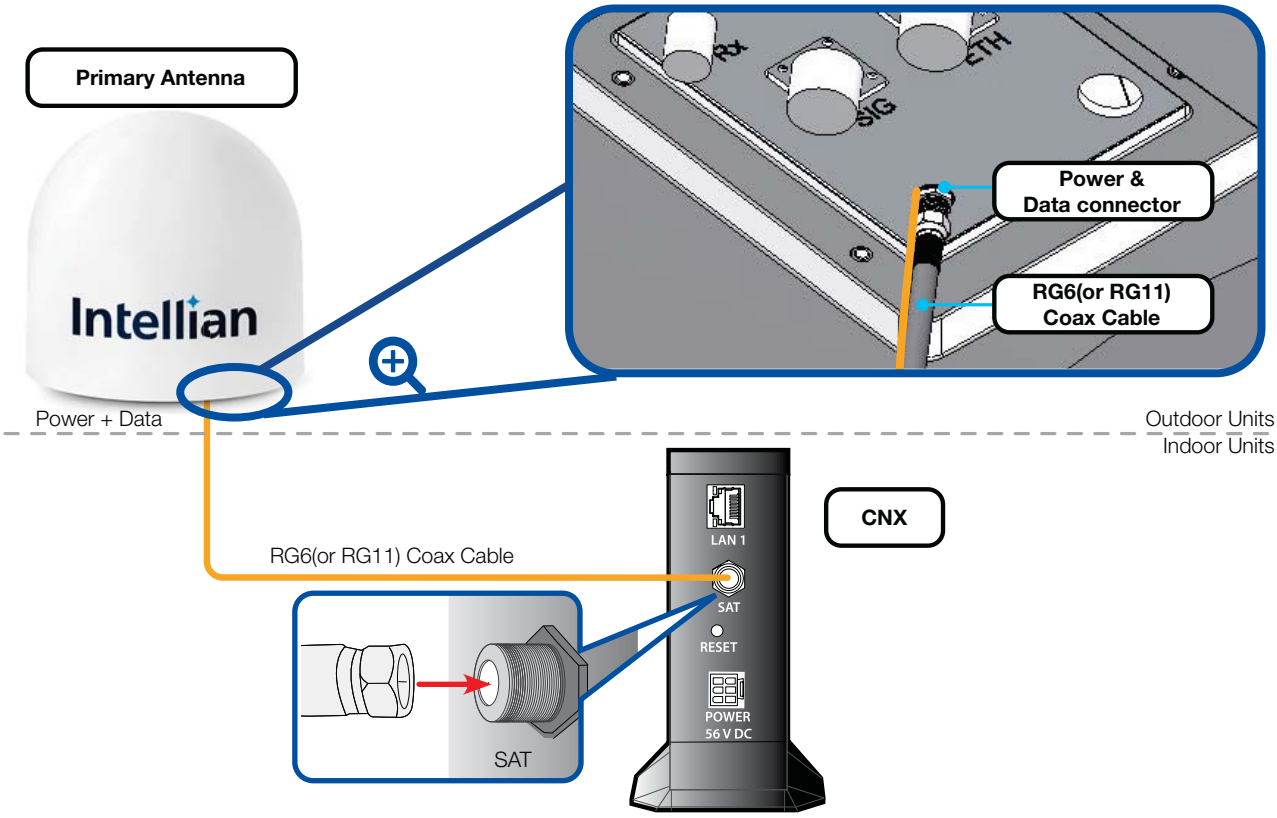

Figure 11: Cable Connection of CNX to Antenna

NOTE

- Choose between the RG6 or RG11 coax cable for connecting the CNX according to the cable length.
  - RG6: within 30m (98.43ft), RG 11: within 100m(328.08ft)
- A separate purchase of RG11 Coax cable is required.
- To prevent cable damage, wrap the cable and connector by using a waterproof tape. (Refer to "10.5 Important Notice of Waterproofing Connector" on page 70.)

4.11.2 Connecting Primary Antenna to Secondary Antenna

1. Connect the RF (Rx) Cable from the Rx Port of the Primary antenna to the Rx Port of the Secondary antenna.
2. Connect the RF (Tx) Cable from the Tx Port of the Primary antenna to the Tx Port of the Secondary antenna.
3. Connect the Ethernet Cable from the ETH (LAN) Port of the Primary antenna to the ETH (LAN) Port of the Secondary antenna.
4. Connect the Signal Cable from the SIG (Signal) Port of the Primary antenna to the SIG (Signal) Port of the Secondary antenna.

CAUTION

- DO NOT over-tighten the connector, nuts, or screws when mounting the antenna to prevent any damage.
- DO NOT leave any cables loosen and non-fixed, especially for those installed outside of the antenna.
- Make sure all cables are fully secure and cables are tied off correctly to prevent trip hazard and damage.

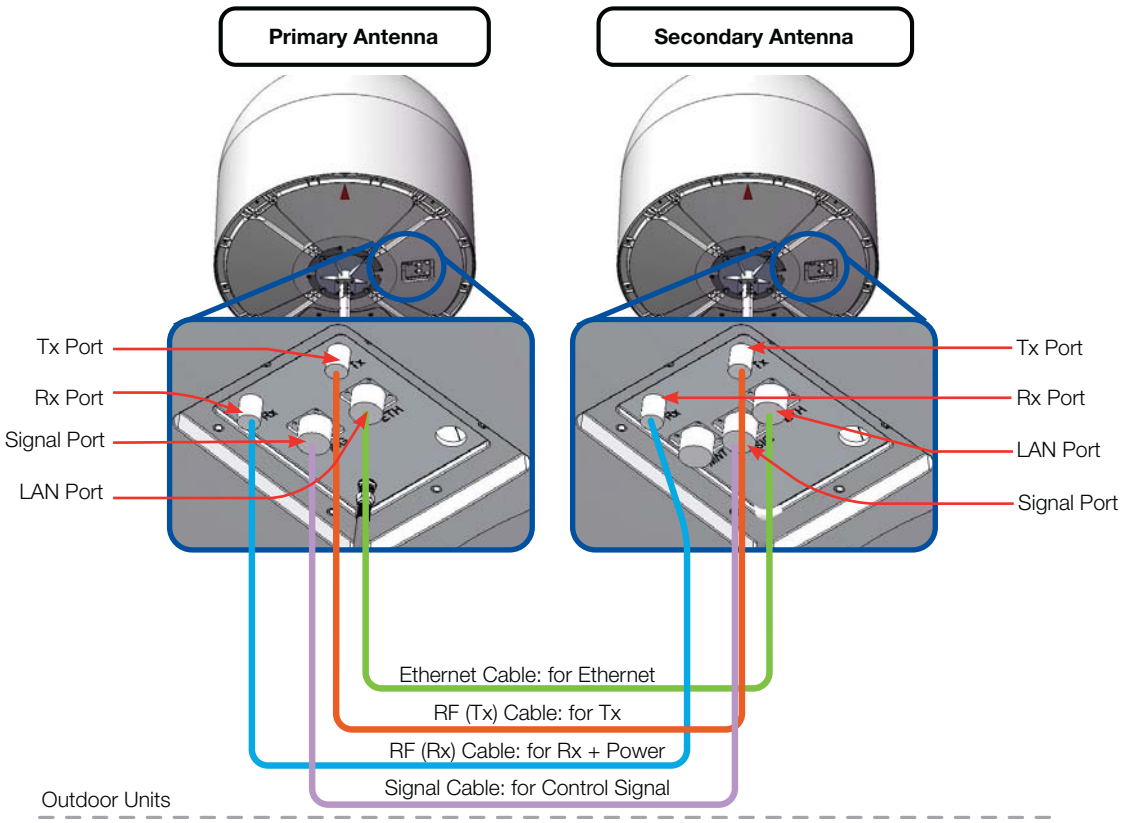

Figure 12: Cable Connection Between Two Antennas

NOTE

- Intellian supply the standard 5M Inter-dome cable kit (Two 5M RF Cable, One 5M Ethernet Cable and One 5M Signal Cable) to connect two antennas. If you need a longer cable than included, contact Intellian to purchase 10M or 20M Inter-dome cables kit.
- To prevent cable damage, wrap the cable and connector by using a waterproof tape. (Refer to "10.5 Important Notice of Waterproofing Connector" on page 70.)

4.12 Connecting power cable for Heating Module (Optional)

There are two kinds of OW130L-Dac versions, one is OW130L-Dac without Heating Module. Another one is OW130LH-Dac pre-fitted Heating Module version. You can purchase among them and cannot buy the Heating Module kit separately. Therefore, choose the model appropriately consider your circumstances.

The below steps are described for connecting cable for Heating Module.

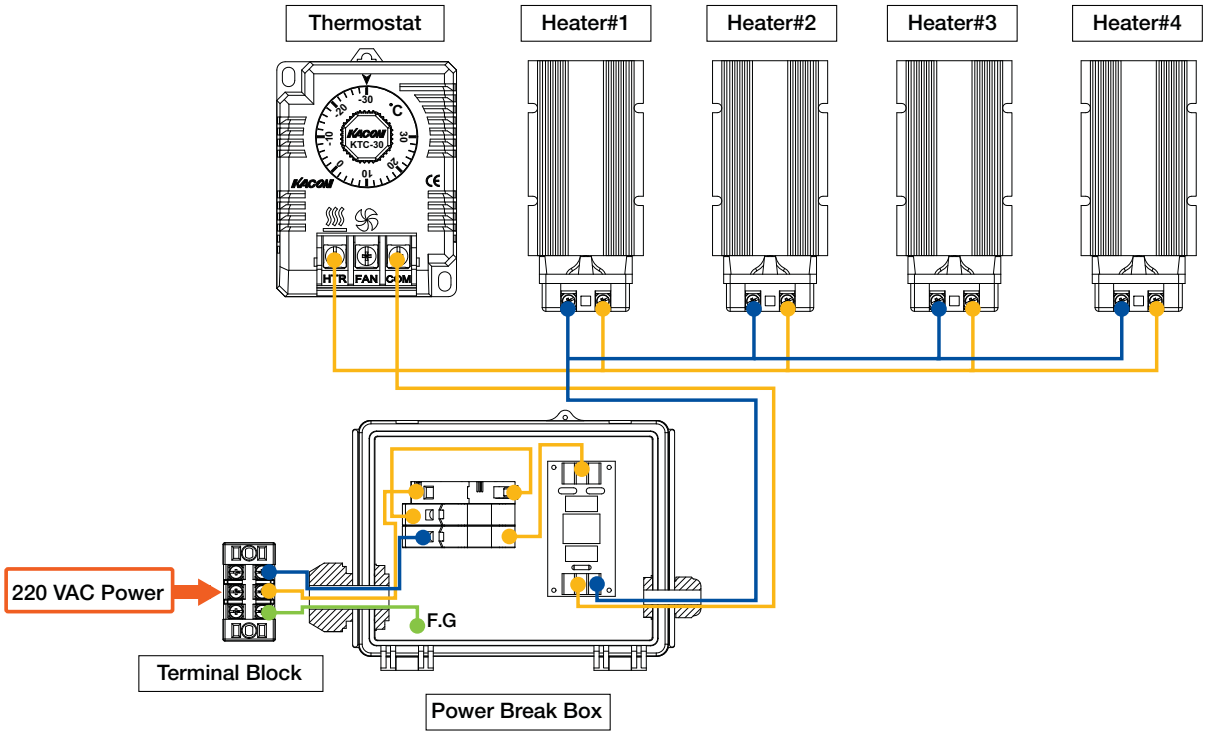

Figure 13: Cable Connections for Heating module

4.12.1 Opening Radome Hatch

Access the ODU module inside the radome through the radome hatch to connect the system cable. Make sure that there is a sufficient space to open the radome hatch underneath the radome. Loosen the radome hatch locking using the provided door key, and then open the radome hatch.

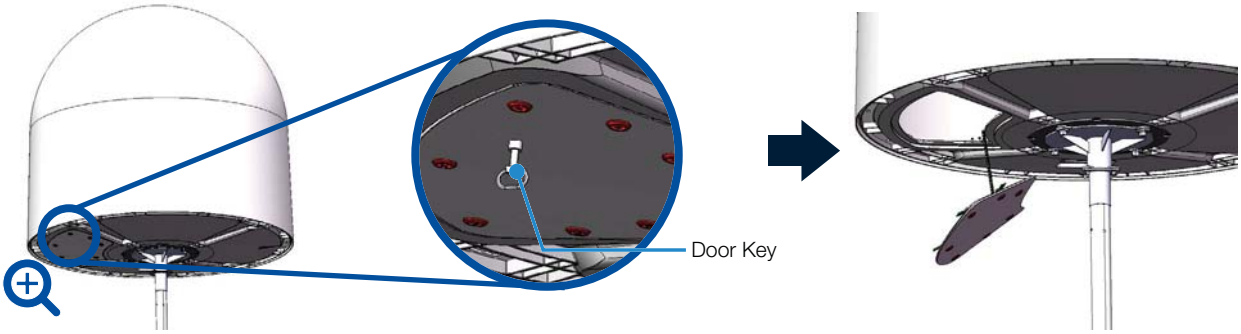

Figure 14: Opening Radome Hatch

4.12.2 Connecting the Power Cables for Heating Module

1. Insert the cables into the radome through the pre-installed cable glands at the base of the radome. Tighten the compression nuts enough to hold the cables in position. Use the cable gland assembly sequence shown in the figure below, but do not tighten the cable glands completely yet.

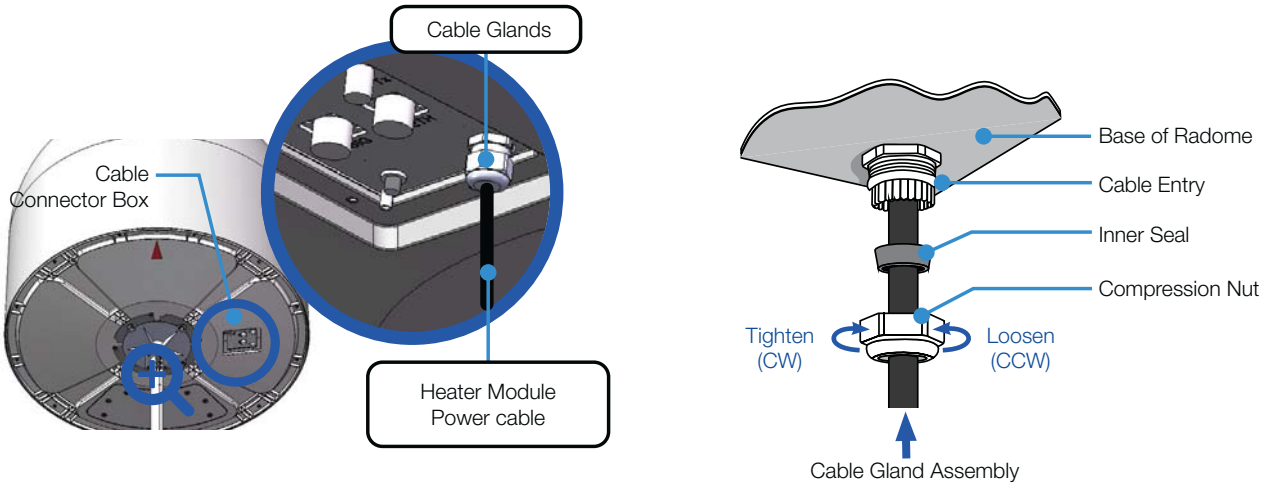

Figure 15: Inserting Cables Through Cable Glands

2. Connect the power cable for heater module to the terminal block inside the radome as shown in the figure below. Ensure that the cable is firmly fastened to the connector.

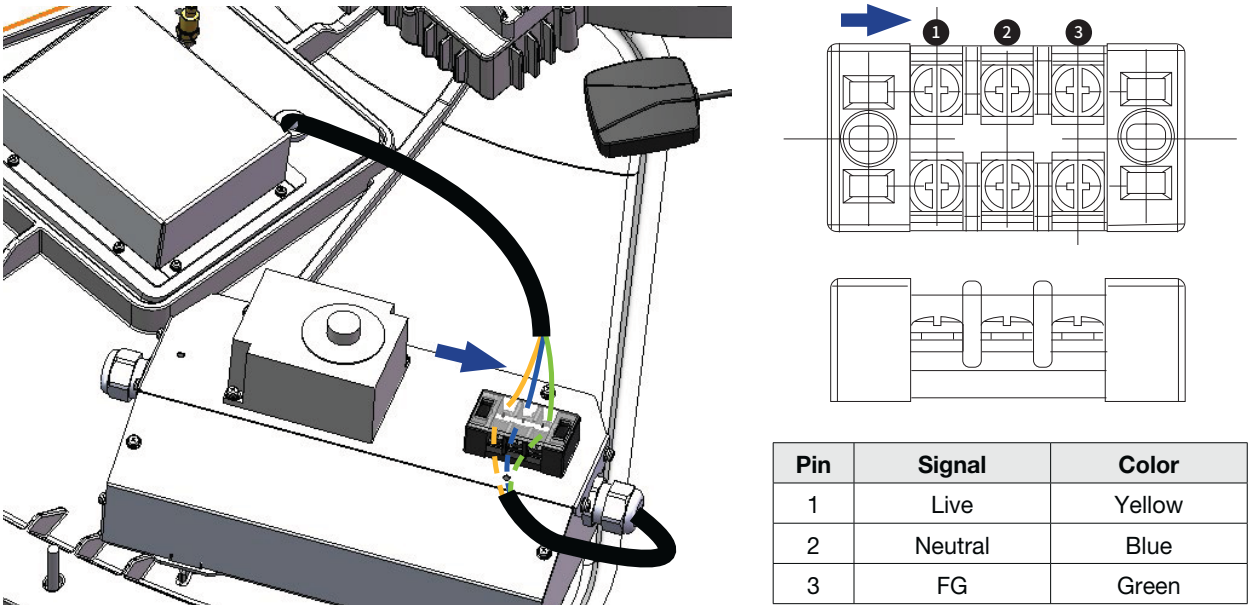

Pin	Signal	Color
1	Live	Yellow
2	Neutral	Blue
3	FG	Green

Figure 16: Connecting Power Cable for Heating module to Terminal Block

4.12.3 Closing Radome Hatch

1. Fully tighten the cable gland at the base of radome that you assembled temporarily in the previous step.
2. Position the radome hatch, and then close it by installing the locking screws (slotted) (7 ea) using the provided door key.
3. Adjust the cable lengths, and then securely fix the cables on the NPM using the cable ties.

NOTE

- Before closing the radome hatch, ensure that the cables are firmly fastened to the connectors.
- Fully tighten the cable glands at the base of the radome and fix the cables on the NPM by fastening the cable ties securely.

4.13 Grounding Antenna

Direct grounding for the antenna is very important for safety. Your radio hardware must be protected from lightning strikes or static electricity by grounding. When establishing your grounding system, it must comply with the safety standards in your country.

Ground all the antennas in use separately.

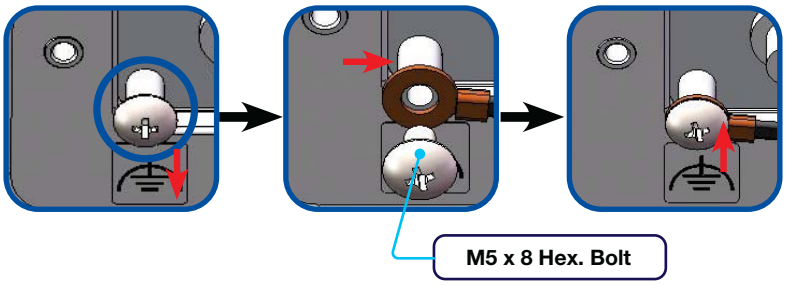

Figure 17: Grounding Antenna

Chapter 5. Installing Indoor Unit (IDU)

5.1 CNX Dimensions

Confirm the dimensions of the CNX before installing it.

Unit: mm (inches)

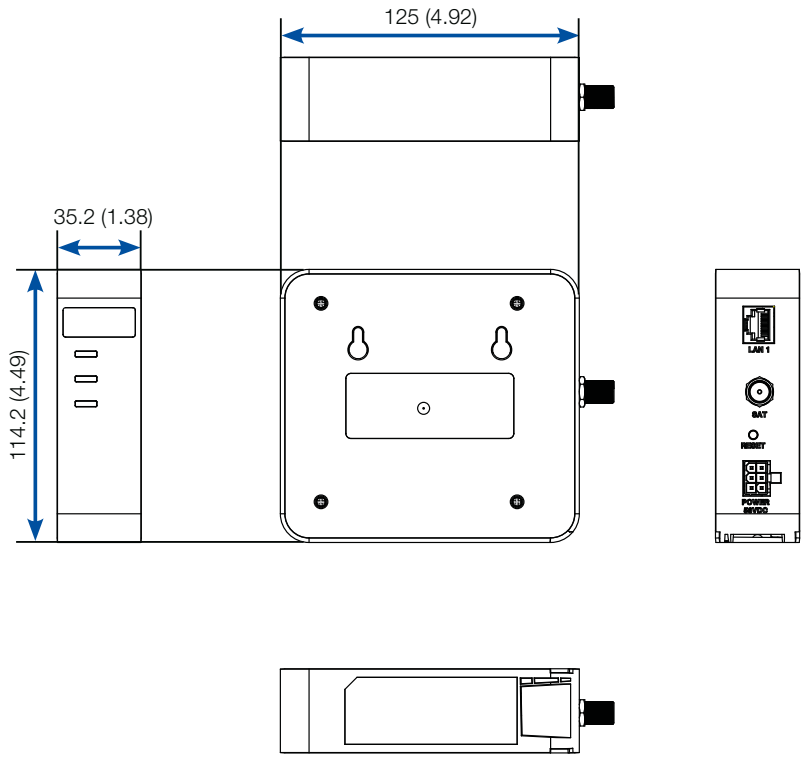

Figure 18: CNX Dimensions

CAUTION

- This equipment design typically applies to commercial or industrial equipment expected to be installed in locations where only adults are normally present.
- This product is intended to be supplied from Intellian by a Listed Power Adapter, rated 56 V DC, 4.48 A minimum, if need further assistance, please contact OneWeb for further information.
- Ensure to connect the power cord to a socket-outlet with earthing connection.
- Never open the equipment. For safety reasons, the equipment should be opened only qualified service personnel. This appliance classification of use by Skilled person.

5.2 Antenna System Configuration

For the proper operation of your satellite communication system, it must be connected with all the provided components as shown in the figures below.

The basic antenna system consists of two antennas and a CNX.

The Primary Antenna Includes the SSM Module, which is capable of controlling and managing two antenna systems simultaneously.

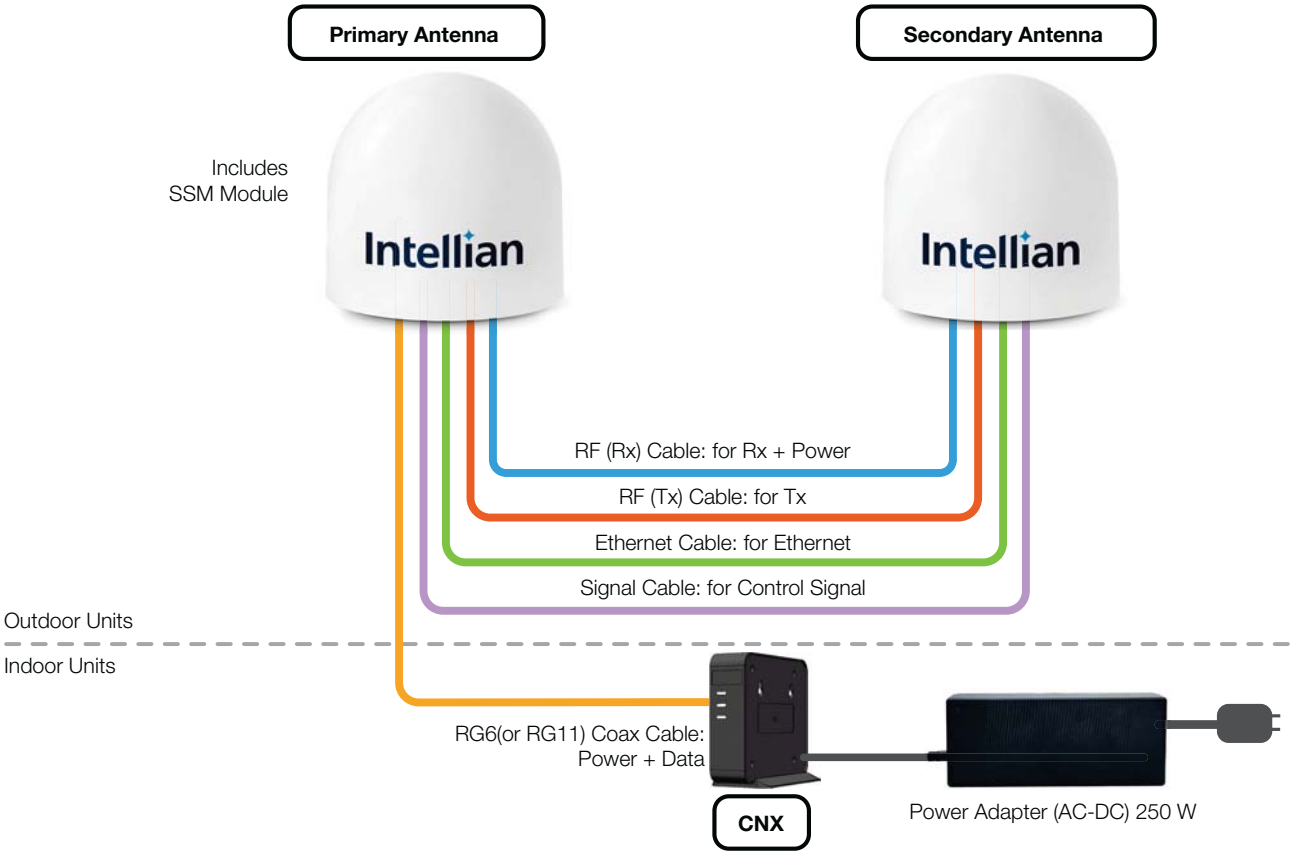

Figure 19: Dual Antenna System Configuration of OW130L-Dac (Standard)

NOTE

Choose between the RG6 or RG11 coax cable for connecting the CNX or heating module to antenna according to the cable length.
- RG6: within 30m (98.43ft), RG 11: within 100m(328.08ft)

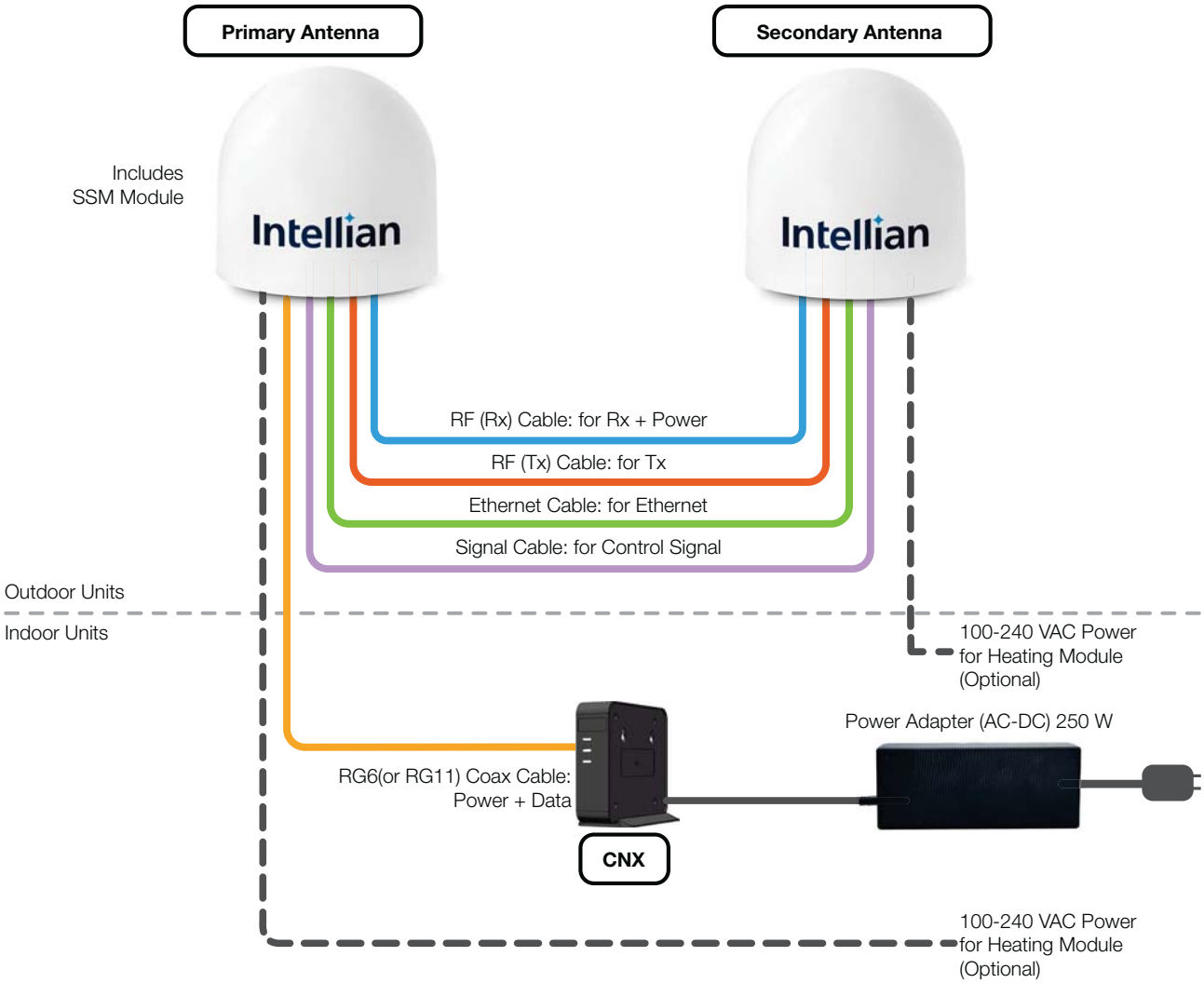

Figure 20: Dual Antenna System Configuration of OW130LH-Dac (w/ Heating Module)

NOTE

Choose between the RG6 or RG11 coax cable for connecting the CNX or heating module to antenna according to the cable length.
- RG6: within 30m (98.43ft), RG 11: within 100m(328.08ft)

5.3 CNX Cable Connection

5.3.1 CNX Back Panel Connectors

The following figure shows the CNX back panel connectors.

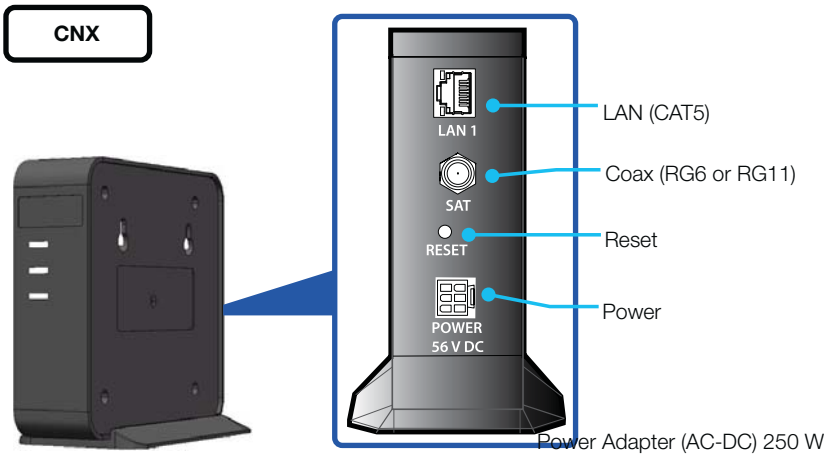

Figure 21: Back Panel Connectors

5.3.2 CNX Connector Pinout Guide

Reference the following connector pinout information for the connection Ports of the CNX.

LAN Connector

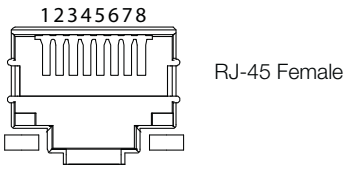

Pin	Signal
1	BI_DA+
2	BI_DA-
3	BI_DB+
4	BI_DC+
5	BI_DC-
6	BI_DB-
7	BI_DD+
8	BI_DD-

Coax Connectors

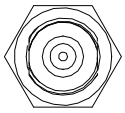

RF F Type Female

Conductor	Function
Inner	Power + Data
Outer	GND

Power Connector

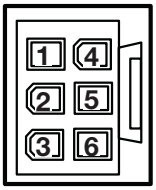

6 Contact Power Plug Male

Pin	Signal
1	Return
2	GND
3	Return
4	+56V DC
5	NC
6	+56V DC

Chapter 6. Operating CNX

6.1 CNX Front Panel View

Check the connection status with the LED indicators on the front panel of CNX.

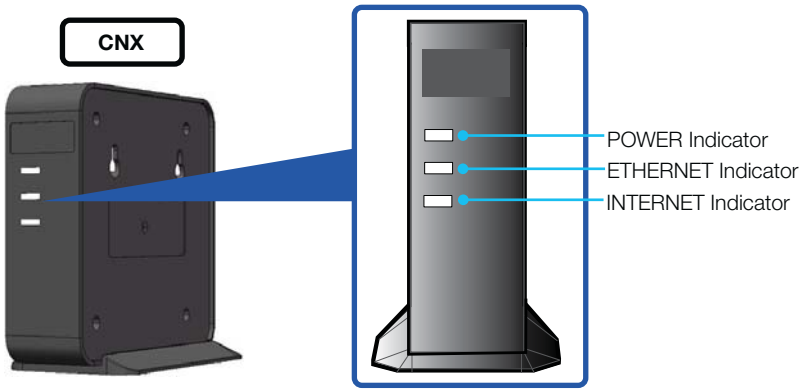

Figure 22: Front Panel View of CNX

The following table shows status indicators on the CNX.

LED Indicators	Colour	Description
POWER	Steady Green	The CNX is powered on.
	Off	The CNX is powered off.
ETHERNET	Steady Green	The user network is ready. (There is a good physical connection and also, running thorough traffic stably connected)
	Blinking Green	The user network is connected. (There is a physical connection)
	Off	The user network is not connected.
INTERNET	Blinking Green	The CNX Coaxial cable is connected. Its blinking frequency changes by the signal traffic. (MoCA communication is established)
	Off	The CNX Coaxial cable is not connected properly. (MoCA communication is not properly established)

Chapter 7. Using Local User Interface (LUI)

7.1 Introduction

With the embedded Using Local User Interface (LUI) software, the antenna can be monitored, controlled, and diagnosed remotely through a web browser. It saves your time and cost generated by various maintenance activities such as operating firmware upgrades, tracking parameter resets, and system diagnosis, etc.

7.2 Requirements to Access OneWeb Web Interface

The LUI can be accessible by Chrome web browser.

NOTE

LUI works on Chrome web browsers. (Intellian recommended using Chrome web browser when operating ***LUI***.)

7.3 Turning On System

The primary antenna has to be connected to the CNX and powered up in order to access the webpage.

The CNX should be connected to a power adapter before connecting between the antenna and CNX.

7.4 Accessing Webpage

7.4.1 TCP/IP Connection through LAN Port

The network is automatically configured by DHCP with no additional PC IP configuration.

1. Connect an Ethernet cable from the LAN Port on the front panel of CNX to a LAN Port of PC. The Data LED indicator will turn Green if CNX is connected.
2. Enter the IP address into your web browser's address bar to log in to the Local User Interface (LUI).

- **IP Address: 192.168.100.1 (Default)**

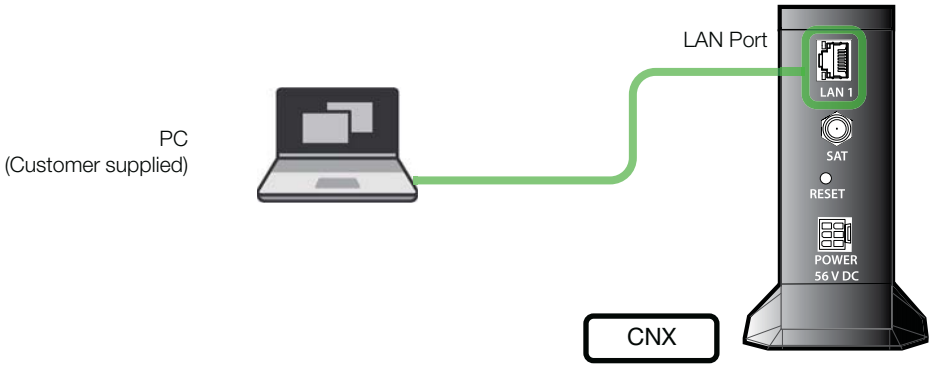

Figure 23: Back Panel LAN Port Connection

7.5 Webpage Layout

Once you log in, the following information and menus are displayed.

7.5.1 Navigation bar

The navigation bar as shown below is the primary way being able to navigate the LUI. The navigation bar is persistent across all LUI pages.

No.	Item	Description
①	Logo	This is the banner that displays the branding logo. Clicking on the logo on any given page will return the LUI to the homepage.
②	Language Drop Down Menu	The language drop-down menu lists all supported languages. Picking a language from the drop-down menu will change all text to the specified language immediately.
③	Navigation Items	These are the navigation items on the navigation bar. Clicking on a section will take you to a different part of the LUI. The sections are as follow: • Home: The homepage of the LUI displays a high-level overview of most components via a card layout. • Install: Guides the user through the installation process. More information on the installation process can be found in the **"7.7 Starting Install Menu (Install Wizard)" on page 58**. • Antenna: Displays Antenna Information such firmware version, configuration and status. • Modem: Displays Modem Information (IMSI, IMEI, Manufacturer, Software Version, etc.), Modem Status (Call Status, Operating mode, etc.), OneWeb Extension Statistics, and GNSS Statistics. • Network: Displays statistics for all the network interfaces on the SSM such as the CNX interface, MGT interface, and WAN interface. • Diagnostics: Contains most of the SSM related statistics and configuration. Displays information such as the UT Status, Sensor Information, Host Processor Logs, and Event Logs. • Management: Displays UT Network Management Information such as SDL Information and UCR Statistics.
④	Auto-Refresh	This is the auto-refresh dropdown. Choosing an interval other than 0 will, refresh the display, fetch the data again at the specified interval.
⑤	Reboot	This is the reboot button. Clicking this button will trigger an SSM reset. While the SSM is rebooting, the reboot button turns from green to red. Upon successful reboot, the LUI will automatically refresh the page and the reboot button will go back to being green.

7.5.2 Home Page

The home page consists of several cards that display a high-level overview of certain components such as the UT System, Antenna, or UT Network Management. Each card has a border that, depending on the status of the subsystem, changes colour. If the subsystem is in a bad state, the card is outlined in red. If the subsystem is behaving as normal, then the card is outlined in green. Clicking on a card will take you to the webpage where you can find more detailed information about the subsystem.

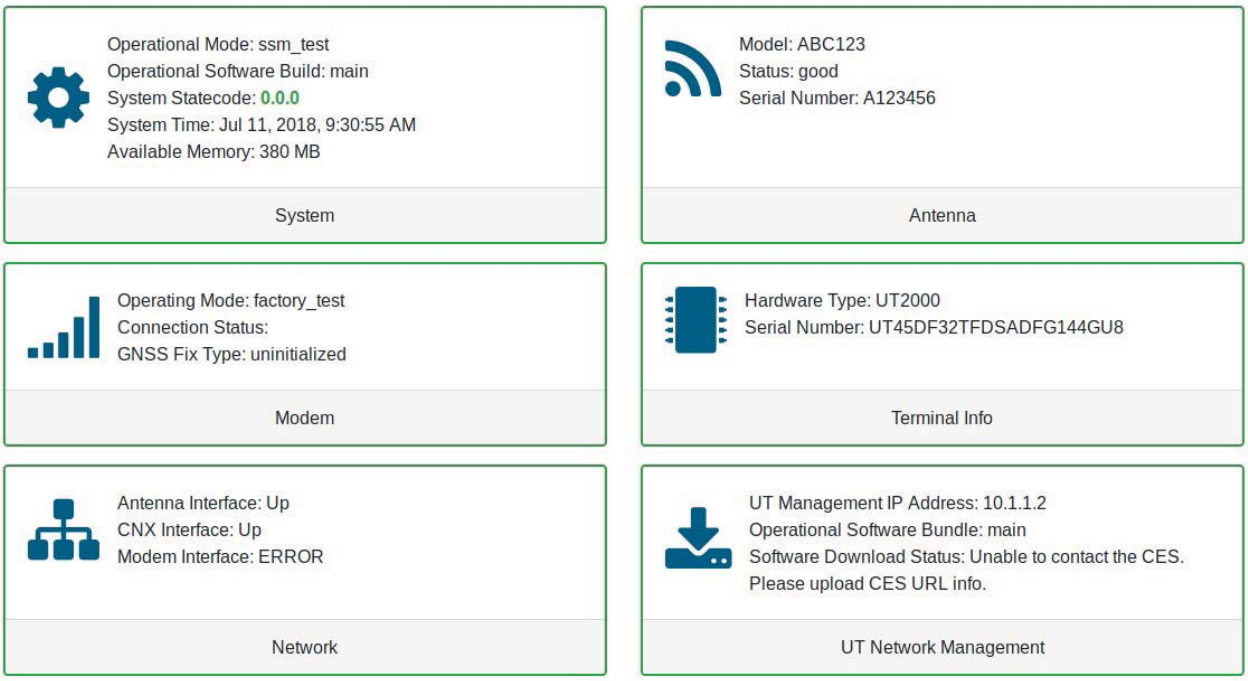

7.5.3 Footer

The footer, like the navigation bar, is persistent throughout all LUI pages. The footer contains two pieces of information: one on the left and one on the right.

The current software version that is running on the Host Processor is displayed on the left. The operational software mode follows the software version. If the operational software mode is a factory, the text colour is red. If the operational software mode is main, the text colour is green. Clicking on this will take you to the **UT Status** section of the Diagnostics page.

The system uptime is displayed on the right. It displays how much time has passed since the last reboot. The format is days:hours:minutes:seconds.

7.6 Setting Up Cable and Antenna

This section describes how to setup the antenna.
Setting up the antenna is required before “7.7 Starting Install Menu (Install Wizard)”.

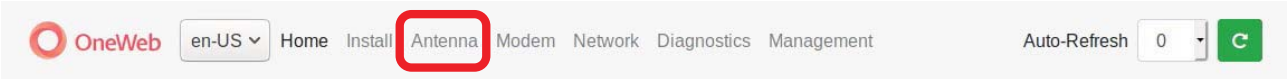

7.6.1 RF Cable Setup

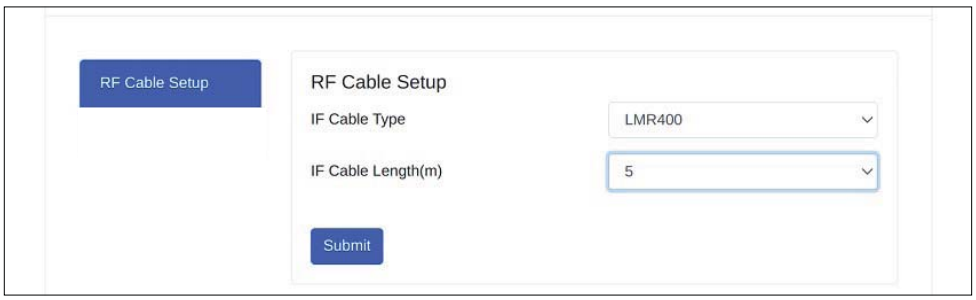

Intellian provides the Antenna RF Cables (LMR400, 5 m) as default. Choose the **LMR 400** on the **IF Cable Type** and the **5** on the **IF Cable Length (m)** from the drop-down list. Click on **Submit**.

NOTE: The RF cable type and length value must be the same as the RF cable being used.

7.6.2 TILT Calibration

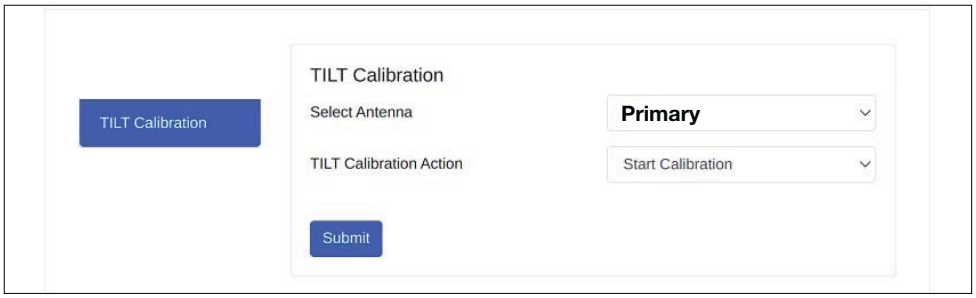

The Tilt Calibration must be applied to both the primary and secondary antennas. Choose the **Primary/ Secondary** on the **Select Antenna** and select the **Start Calibration** on the **TILT Calibration Action** from the drop-down list. If you select the **Stop** on the **TILT Calibration Action** and Click the **Submit**, the antenna system will stop the tilt calibration.

Click on **Submit**, then click on **Next**. The antenna system will start the tilt calibration.

7.6.3 Antenna Setup

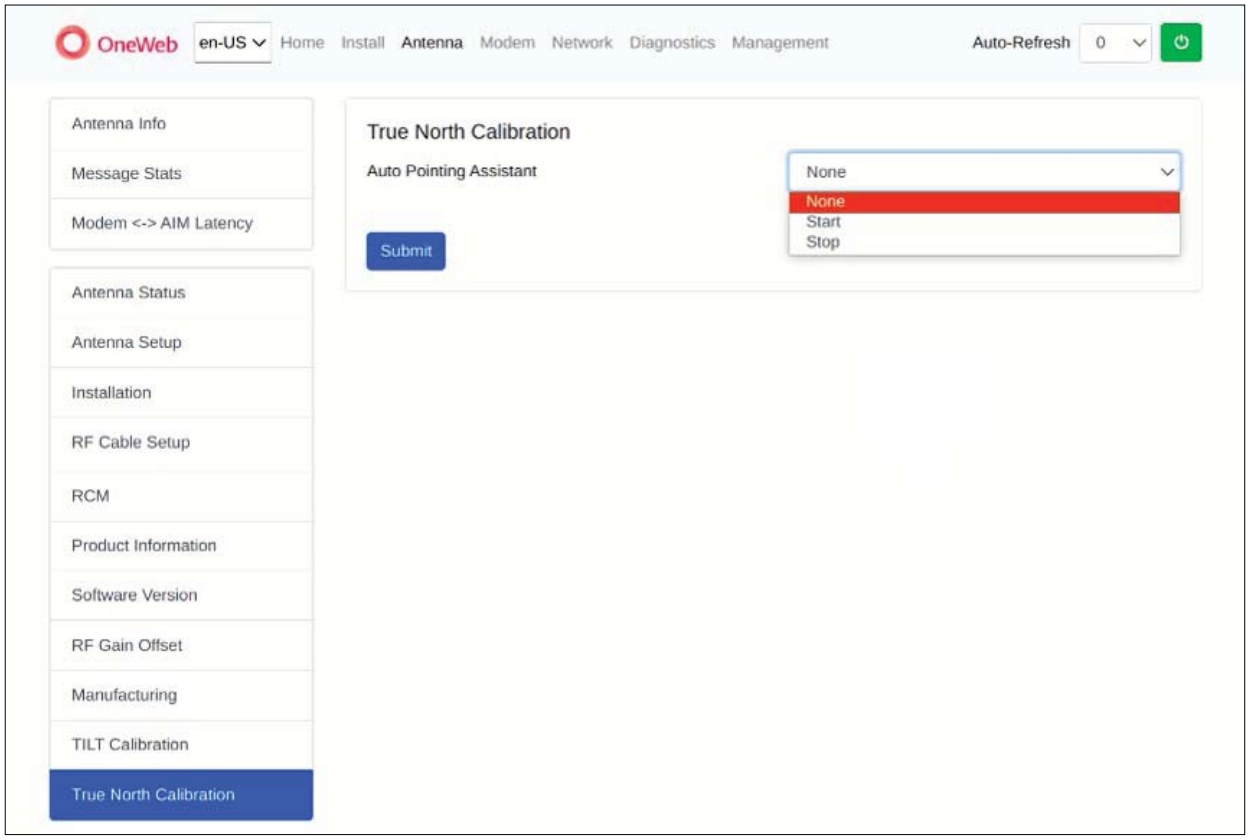

This section can be skipped if this is first time setting up the antenna. Only if the antenna is moved to a different location, select **Start** for Auto Pointing Assistant and click on **Submit**.

7.7 Starting Install Menu (Install Wizard)

The Install Wizard will give you a guide by going through the steps of setup for the antenna system commissioning. We highly recommend using this wizard to complete your installation and commissioning of the system. After accessing LUI main page, go to the **Install** menu on the navigation bar and perform the wizard.

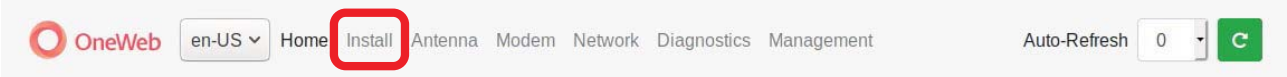

The LUI Installation page serves as the front end for installation.

7.7.1 Installation Navigation

At the top of the installation, the page is the installation navigation. At the top is a progress bar that displays what percentage of the installation process is complete. An auto advance button on the left that, when enabled, advances the installation to the next step once the current step has either finished or is not required.

On the right are three buttons:

- **Start Over** button: Brings you back to the first step of the installation.
- **Back** button: Steps one step back in the installation.
- **Next** button: Advances to the next step in the installation.

If a given state is required, the Next button is disabled, and the installation cannot proceed until the current step has been completed.

7.7.2 Initial Install Page

The first page of the installation process is a splash screen that states that the UT has not yet been installed. To proceed with the installation to the next step, click on **Start Installation** or **Next**.

7.7.3 Upload Software Bundle

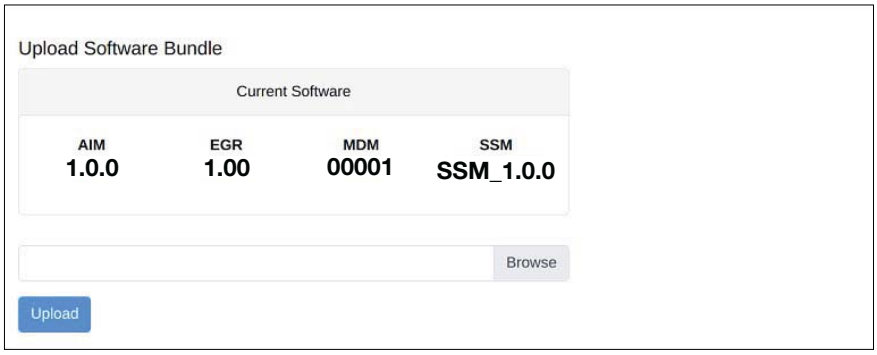

The Upload Software Bundle page displays the current software versions running on each component. Clicking on the empty text box or the **Browse** button allows the upload of a Software Bundle. Until a bundle has been uploaded, the **Upload** button is greyed out. If the upload is not successful, a status error message will be displayed.

7.7.4 New Software Listing

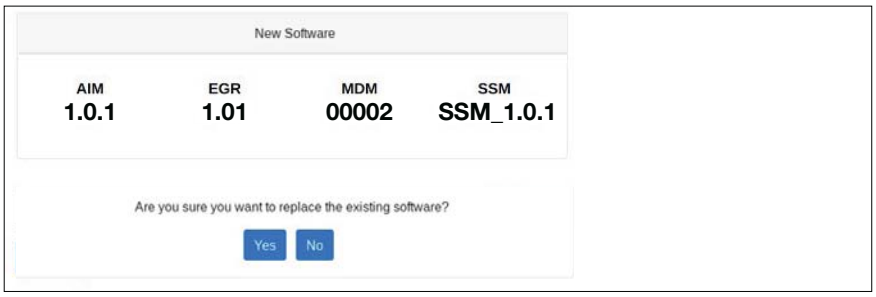

Upon a successful upload, the New Software version is displayed beneath the current software along with a prompt. Clicking **No.** It deletes the bundle file that was uploaded and returns you back to the beginning of the state in which you must upload another bundle file. Clicking **Yes** then triggers the next step of this state which is performing the updates. If an update fails for any given component, an error message is displayed and the SSM stops attempting to update the rest of the components. Upon a successful update, the SSM will reset itself and the LUI will refresh the page once the SSM has finished rebooting. After the reboot, you can click to advance to the next state.

7.7.5 Upload Ephemeris Data

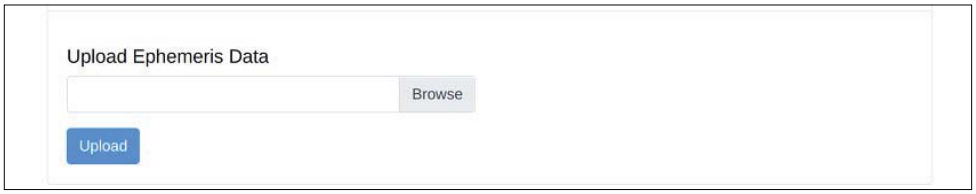

The Upload Ephemeris Data page is a simple file upload page. Simply click on the empty text box or the **Browse** button to upload an Ephemeris file. Until a file has been uploaded, the upload button is greyed out. Upon a successful upload, a success status message will be displayed, and the state can be advanced. Click on **Next**.

NOTE

What is Ephemeris Data?

Ephemeris Data contains current information about the orbits of the satellites in the OneWeb constellation. The User Terminal uses ephemeris data to determine the positions of the satellites in the sky at any given time.

Remark: Every 30days, this data file is updated. Once User Terminal is commissioned this will be updated automatically.

7.7.6 Antenna Levelling

The antenna Levelling page displays the current sensor data received from the antenna.
The “Tilt Pitch: degrees” and “Tilt Roll: degrees” are displayed. If the degree values meet the tolerance, the card for the corresponding antenna is outlined in Green; otherwise, it is outlined in Red.
If it is Red, antennal Levelling has to be re-done until the display becomes Green. When Levelling is re-done, “7.6.2 TILT Calibration” has to be done after the installation completes. If the installation fails, it could be due to the incorrect Levelling; therefore, installation has to be re-done.

7.7.7 Autonomous States

Autonomous states all display a progress bar of its progress. The following states require no action from the user aside from proceeding to the next state. All installation state is displayed, or some installation status is displayed underneath the progress bar.

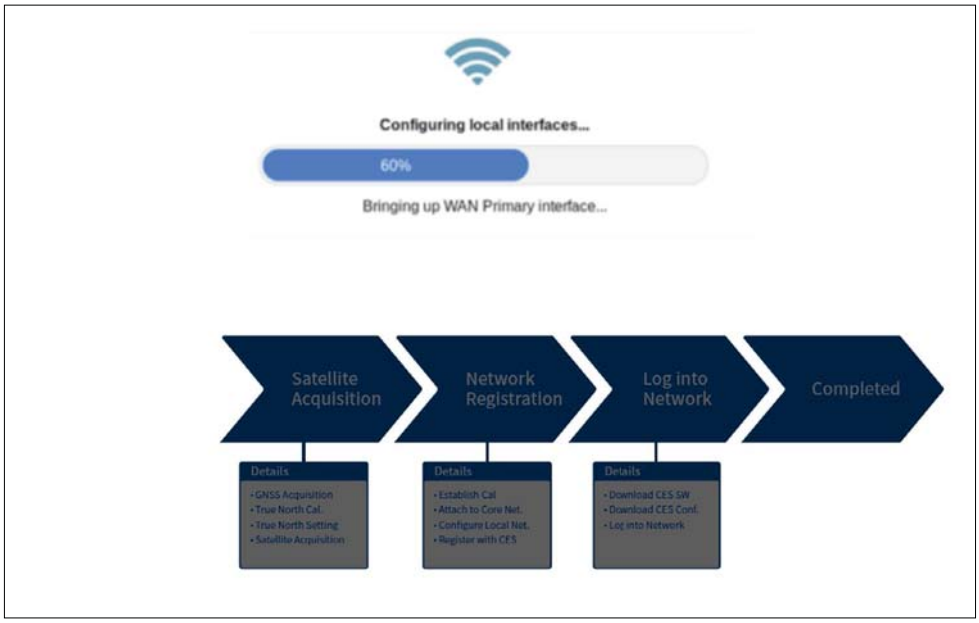

Chapter 8. Specification

8.1 Technical Specification

8.1.1 RF Specification

Item	Specification
Rx Frequency	Rx : 10.7 – 12.7 GHz
Rx Gain (Wthout Radome)	Rx: 41.4 dBi
G/T (@ 11.8 GHz, @ >30deg. EL)	18.2 dB/K
Tx Frequency	Tx: 14.0 – 14.5 GHz
Tx Gain (Without Radome)	Tx: 42.4 dBi
EIRP	39.9 dBW / 20 MHz (Single carrier) 42.9 dBW / 40 MHz (Dual carrier)
Cross pol Isolation	Min 15 dB (Antennas Field of view)
Polarization	Circular (Rx: RHCP, Tx: LHCP)

8.1.2 System Specification

Item		Specification
Platform		Three Axis: Azimuth, Elevation, Cross-level
Positioning		3-axis Velocity Mode Servo Control: Azimuth, Elevation, Cross-Level
Pedestal Motion Range	Azimuth	-330° to +330°
	Elevation	-84° to +84 ° (FOV 53 ° to +53 °)
	Cross-Level	-10° to +10°
Power Consumption		Max. 200W
Power Adaptor		Max. 250W
CNX Power Source		AC/DC Adapter (Input 100-240 VAC, 50-60 Hz, Output 56 VDC)
DC Power to Antenna Subsystem		Current 4 A average/ 5 A peak @ 32-60 V, 56 V nominal

Item		Specification
EGR	GPS L1 Frequency	1574.397 – 1576.443 MHz
	GLONASS Frequency	1597.5515 – 1605.886 MHz
	Communication Protocol	SCPI & NMEA 0183
	Reference Clock Frequency	38.4MHz sinusoidal reference clock output to the SSMv2
	Supply Voltage	Nominal 5.5V (Min. 5.2 V, Max. 5.8 V)
	Power Consumption	Max. 8 W
	Antenna Power Interface	Min. 3 V, Max. 5 V
	Surge Protection	Max. 2 kV
	Connections	SMA
Digital Signals		Tx-ON : LVDS
		Rx-ON : LVDS
		Frequency Reference: LVDS
		Reset: LVDS
Ant. Monitor, Control Interface		Ethernet, 10/100 Base T
CNX	Antenna Subsystem Interface	Four GigE RJ-45 Ethernet
	Encryption	MoCA 2.0 E-band (400-700MHz)
	Input Voltage	Min. 54 V, Max. 59 V
	Operating Power	Max. 30 W
	Output Voltage	Max. 0.5 V
	Output Power	Max. 220 W
	Reset	MoCA chipset and Ethernet PHY
	LEDs	Power: Operational – Solid GREEN Fault Condition – Solid RED Operating with Backup S/W – Blinking RED Off – No power
		Ethernet: Ready – Solid GREEN Activity – Blinking GREEN Off – No device connected or device connected not operational
		Internet: Operational – Solid GREEN (CNX-MIM MoCA connected) Fault Condition – Solid RED
	Antenna Subsystem Interface	Four GigE RJ-45 Ethernet
Tx Cable		LMR 400: Tx IF + 25 MHz reference signal
Rx Cable		LMR 400: 2 GHz IF + Power
Ethernet Cable		CAT5

8.1.3 Mechanical Specification

Item		Specification
Radome Height		1430 mm (56.3")
Radome Diameter		Ø1500 mm (59.1")
Reflector Size		125 cm (49.2")
Radome Color		White
Antenna Safety Gap		30 mm
Antenna Weight		95 Kg (209.4 lbs)
Package	Size	1760 mm x 1680 mm x 1675 mm
	Package weight (Antenna+ Package+HM)	230 kg (TBD)

※ Package size may change with design revisions

8.1.4 Environmental Specification

Item	Specification
Operational Temperature	- 40°C to + 55°C (w/ optional heating device) - 25°C to + 55°C (w/o heating device)
Survival Temperature	-40°C to +80°C
Storage Temperature	-40°C to +85°C
Storage Environment	ETSI EN 300 019 Class 1.1
Operational Temperature (CNX)	0°C to +40°C
Operational Humidity	Relative humidity range of 10% to 100% non-condensing in accordance with IEC60068-2-78 for a period of 96 hours.
Non-operational Humidity	IEC 60068-2-78, Method Db for a period of 96 hours.
Operational Vibration	IEC 60721-3-4 Class 4M3 0.001 ~ 0.02 G 2/Hz, 5 to 10 Hz 0.02 G2/Hz, 10 to 100 Hz 0.001 ~ 0.02 G2/Hz, 100 to 150 Hz
Non-operational Vibration	The UT shall survive, although it may not meet its operational specifications, when exposed to sinusoidal sweep vibration, referred Earthquake Resistance, Seismic test condition
Operational Shock	IEC 60068-2-27, at the following level: 15 G at 11 msec (half sine) on x, y, z axes.
Non-operational Shock	IEC 60068-2-27, at the following level: 15 G at 11 msec (half sine) on x, y, z axes.
Weather Tightness	IP66 per IEC 60529
Lightning Protection	IEC 61000-4-5 Class 4
Hail Impact	ASTM E822
Operating Wind Resistance	80 mph (35.6 m/sec)
Functional Wind Resistance	100 mph (44.4 m/sec)
Survival Wind Resistance	135 mph (60.0 m/sec)
Salt Erosion	IEC 60068-2-52 Severity Lv 3

Chapter 9. Warranty

Subject to the terms and conditions set forth in this Intellian Standard Global Warranty, the Agreement and/or any other terms and conditions agreed upon by Distribution partners and Intellian, Intellian satellite antenna products are warranted against defects in parts and workmanship for a period of one (1) year in respect of defects in parts and for a period of one (1) year in respect of the factory labor.

Warranty Time Period: Warranty periods commence from the date of shipment from an Intellian facility.

If installation occurs within six months of the date of shipment from an Intellian facility then Intellian will extend the duration of the warranty by the number of days between shipment and installation of the terminal. If installation occurs on or after six months of the date of shipment then the duration of the warranty will not be extended.

This Warranty shall be void for any Product which has been subjected to **"Intellian Standard Global Warranty"**.

Warranty Claim Procedure: Information on Intellian's warranty policy and coverage can be found on the Intellian Partner Portal. Intellian's warranty policy aims to reimburse Distribution partners for a reasonable percentage of costs and time that would be incurred when repairing an Intellian system. Intellian's warranty policy does not cover any other costs including those incurred by Distribution partners to support End Users.

To submit a Warranty Claim with Intellian. Please follow the directions in **"Intellian Standard Global Warranty"**.

Chapter 10. Appendix

10.1 Pre-Installation Checklist

This pre-installation checklist describes important considerations before installing the UT. It must be completed by the certified installer to install in a safe location. Please fill out the general information below.

Date of Survey:

Date of Install (If different from installation date):

Installer Information

- Company Name:
- Installer's Name:
- Contact Phone Number:
- Address:
- Email:

Customer Information

- Organization Name:
- Customer Name:
- Phone Number:
- Address:
- Email:
- Site Location (Lat / Long.):
- UT Type Being Installed (w. CNX):

The following checklist is to be completed by the Installer.

Building / Site checklist

Check Item	Result
The proposed antenna mount type is checked. (Roof Mount / Ground Mount / Ground Level Pole Mount / Pole Mount Bolted to Wall / Custom Mount / Etc.)	(Fill out)
The location of the site is checked. (Urban / Semi-urban / Rural / Remote)	(Fill out)
The building external wall composition is checked. (If mounted on the building)	Yes / No / N/A
The line-of-sight of the antenna is checked for radiation safety.	Yes / No / N/A
The safety from unauthorized access is checked.	Yes / No / N/A
The roof space/floor space availability based on mount type is checked.	Yes / No / N/A
The roof/soil composition based on mount type is checked.	Yes / No / N/A
The lightning protection availability is checked.	Yes / No / N/A

Expected Obstructions / Possible Interference checklist

Check Item	Result
The field of view to satellite constellation is checked.	Yes / No / N/A
The no interference with RF transmitters is checked.	Yes / No / N/A
The no interference by high voltage lines, power cables, and telephone cables is checked.	Yes / No / N/A
The no other possible sources of interference are checked.	Yes / No / N/A
The map of no obstruction is checked. (Also updated into UT configuration as an array of AZ, EL coordinates.)	Yes / No / N/A

10.2 Tightening Torque Specification

This table shows the recommended values of tightening torques.

Bolt Size	Tightening Torque (N m)
M2	0.5
M2.5	1
M3	1.5
M4	3
M5	6
M6	12
M8	27
M10	50
M12	85
M14	130
M16	200

10.3 Using a lifting strap

When you install the antenna unit to the mounting plate (or other surfaces), you can use the lifting strap. To use the lifting strap, refer to the pictures below. (A separate purchase of the lifting strap is required.) Make sure that there is plenty of room before installing the lifting strap on the antenna.

1. Prepare the lifting strap.
2. Wrap the antenna up using the lifting straps. Arrange the straps so that the holder is the top of the antenna.

3. Clip the strap onto the shackle, and then fully tighten the lifting strap, and secure the shackle with the pin.
4. Re-wrap the holder and shackle with the protection.

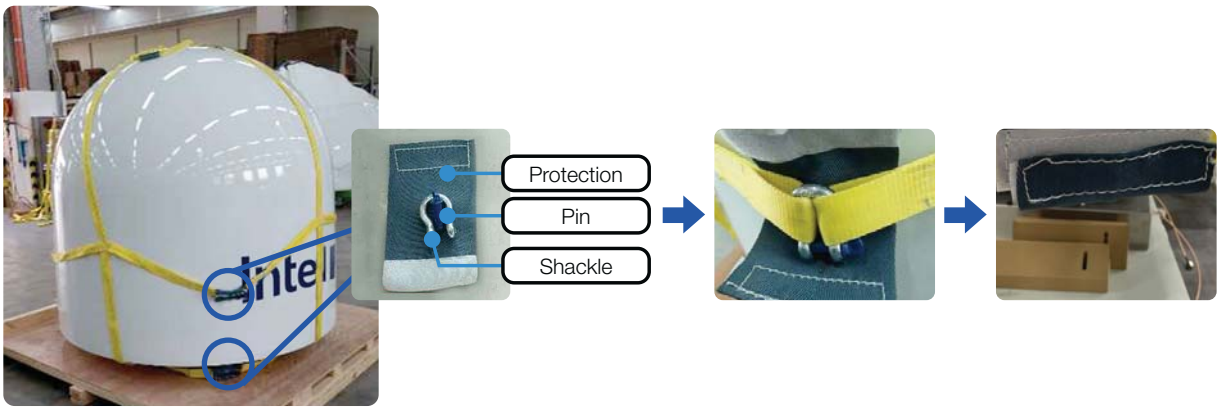

5. Ready to lift the antenna.

10.4 Checking separately sold items

Refer to separately sold items list below table.

Accessory

Part Number	Part Description
OW-CNX-BB	CNX-BB
OW-CNX-1057-PA	CNX Power Adapter (250W)

Installation Kit

Part Number	Part Description
OW-RG11-1009	1000FT (304M) Reel RG11 Cable – Solid Copper Conductor
OW-CIK-1010	Connector Installation Kit
OW-TK-1008	Toolkit, Compression Connector
OW-LS-1083-OW130	UT Lifting Strap for OW130L
OW-NPM13-KIT	**None-Penetrating Mount Kit** • OW-NPM13-Kit includes - OW-NPM13-1080-RM / NP Roof Mount - OW-NPM13-1081-ATP / NP Adjustable Top Plate x2 - OW-NPM13-1082-RM / NP Rubber Mat
OW-GB-1050-KIT	**Grounding Braid Kit** • OW-GB-1050-KIT includes - Grounding Braid (1EA) - M5 X 8 Screw for GB (3EA) - Flat Washer for GB (5EA) • Tooth Lock Washer for GB (5EA)
OW-INSTL13-KIT	**OW130L Installation Kit** • OW-INSTL13-KIT includes - OW-NPM13-KIT / None-Penetrating Mount KIT - OW-RG11-1009 / 1000’ Reel RG11 Cable, Solid Copper Conductor - OW-TK-1008 / Toolkit, Compression Connector - OW-CIK-1010 / Connector Installation Kit - OW-LS-1083-OW130 / UT Lifting Strap for OW130L - OW-GB-1050-KIT / Grounding Braid KIT

10.5 Important Notice of Waterproofing Connector

10.5.1 Introduction

During antenna installation, make sure that, once the cable is connected to the antenna, proper waterproofing of the connector is done with self-amalgamating tape.
If you need any assistance, please contact Intellian Technical Support (support@intelliantech.com).

10.5.2 Outline of Taping

Self-amalgamating tape comes with a protective plastic peel-away layer that allows the tape to be rolled and shipped. To waterproof a connector, first peel away a portion of this protective plastic layer, and then start wrapping the tape around the cable to be protected.

10.5.3 Procedure

1. Connect the cable to the connector where it is to be fully secured.

CAUTION

- DO NOT over-tighten the connector, nuts, or screws when mounting the antenna to avoid damage.
- DO NOT leave any cables loosened or non-fixed, especially those installed outside of the antenna.

2. Apply tape over the connetor.
   It is best practice is to wrap the tape over itself by 50%. This means that, once you wrap your first layer, your second layer should overlap half of the first layer, and so on. This ensures that you get a strong bond between the different layers of tape by having them properly adhere to one another.

3. Ensure that the entire RF connector is taped up as shown in the picture on the right.

WARNING

- Note that you cannot use ordinary electrical tape to waterproof the RF connector.
  Only self-amalgamating tape is able to waterproof the connector properly.
- Failure to properly wrap cabling will result in rust and corrosion to the cable and its connector, and this might end up damaging the antenna.

10.6 Certifications

This device complies with Part 15 of the FCC Rules [and with Industry Canada licence-exempt RSS standard(s)].

Operation is subject to the following two conditions:

(1) this device may not cause harmful interference, and

(2) this device must accept any interference received, including interference that may cause undesired operation.

L'émetteur/récepteur exempt de licence contenu dans le présent appareil est conforme aux CNR d'Innovation, Sciences et Développement économique Canada applicables aux appareils radio exempts de licence. L'exploitation est autorisée aux deux conditions suivantes :

(1) L'appareil ne doit pas produire de brouillage;

(2) L'appareil doit accepter tout brouillage radioélectrique subi, même si le brouillage est susceptible d'en compromettre le fonctionnement.

WARNING

Changes or modifications not expressly approved by the manufacturer could void the user's authority to operate the equipment.

Radiofrequency radiation exposure Information:

This equipment complies with RED and FCC, IC radiation exposure limits set forth for an uncontrolled environment. This equipment should be installed and operated with minimum distance of 12.5 m between the radiator and your body.

This transmitter must not be co-located or operating in conjunction with any other antenna or transmitter.

Note: This equipment has been tested and found to comply with the limits for a Class B digital device, pursuant to part 15 of the FCC Rules. These limits are designed to provide reasonable protection against harmful interference in a residential installation. This equipment generates, uses and can radiate radio frequency energy and, if not installed and used in accordance with the instructions, may cause harmful interference to radio communications. However, there is no guarantee that interference will not occur in a particular installation. If this equipment does cause harmful interference to radio or television reception, which can be determined by turning the equipment off and on, the user is encouraged to try to correct the interference by one or more of the following measures:

- Reorient or relocate the receiving antenna.
- Increase the separation between the equipment and receiver.
- Connect the equipment into an outlet on a circuit different from that to which the receiver is connected.
- Consult the dealer or an experienced radio/TV technician for help.